System Check_Head_750MHz

DUT: D750V3-1107

Communication System: CW; Frequency: 750 MHz;Duty Cycle: 1:1
Medium: HSL_750_200813 Medium parameters used: f = 750 MHz; σ = 0.904 S/m; ε_r = 40.875; ρ = 1000 kg/m^3
Ambient Temperature：23.3 ℃; Liquid Temperature：22.3 ℃

DASY5 Configuration:
- Probe: ES3DV3 - SN3270; ConvF(6.55, 6.55, 6.55) @ 750 MHz; Calibrated: 2019/9/25
- Sensor-Surface: 3mm (Mechanical Surface Detection)
- Electronics: DAE4 Sn1399; Calibrated: 2019/11/14
- Phantom: SAM-Middle; Type: SAM; Serial: TP-1503
- Measurement SW: DASY52, Version 52.10 (4);SEMCAD X Version 14.6.14 (7483)

Pin=250mW/Area Scan (61x61x1): Interpolated grid: dx=1.500 mm, dy=1.500 mm
Maximum value of SAR (interpolated) = 2.51 W/kg

Pin=250mW/Zoom Scan (5x5x7)/Cube 0: Measurement grid: dx=8mm, dy=8mm, dz=5mm
Reference Value = 54.38 V/m; Power Drift = -0.05 dB
Peak SAR (extrapolated) = 3.18 W/kg
SAR(1 g) = 2.15 W/kg; SAR(10 g) = 1.44 W/kg
Maximum value of SAR (measured) = 2.51 W/kg

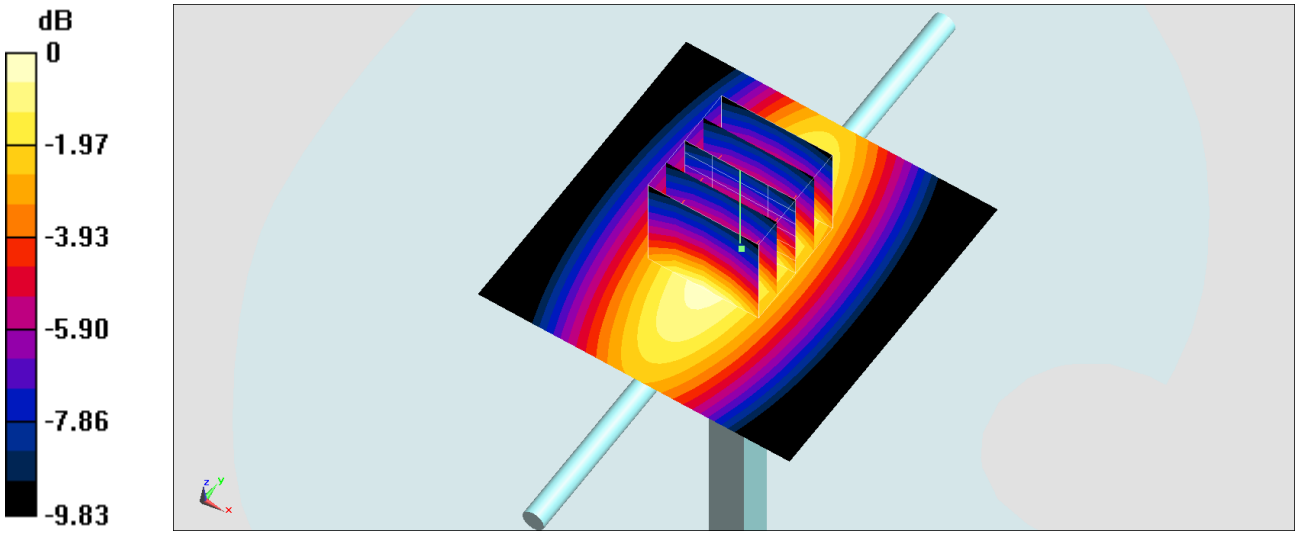

0 dB = 2.51 W/kg = 4.00 dBW/kg

System Check_Head_835MHz

DUT: D835V2-4d167

Communication System: CW; Frequency: 835 MHz;Duty Cycle: 1:1
Medium: HSL_850_200811 Medium parameters used: f = 835 MHz; σ = 0.888 S/m; ε_r = 41.161; ρ = 1000 kg/m^3
Ambient Temperature：23.6 ℃; Liquid Temperature：22.6 ℃

DASY5 Configuration:
- Probe: EX3DV4 - SN3728; ConvF(9.51, 9.51, 9.51) @ 835 MHz; Calibrated: 2020/2/4
- Sensor-Surface: 1.4mm (Mechanical Surface Detection)
- Electronics: DAE4 Sn699; Calibrated: 2020/2/26
- Phantom: SAM-Middle; Type: SAM; Serial: TP-1503
- Measurement SW: DASY52, Version 52.10 (4);SEMCAD X Version 14.6.14 (7483)

Pin=250mW/Area Scan (61x61x1): Interpolated grid: dx=1.500 mm, dy=1.500 mm
Maximum value of SAR (interpolated) = 3.06 W/kg

Pin=250mW/Zoom Scan (5x5x7)/Cube 0: Measurement grid: dx=8mm, dy=8mm, dz=5mm
Reference Value = 60.42 V/m; Power Drift = -0.03 dB
Peak SAR (extrapolated) = 3.45 W/kg
SAR(1 g) = 2.34 W/kg; SAR(10 g) = 1.54 W/kg
Maximum value of SAR (measured) = 3.07 W/kg

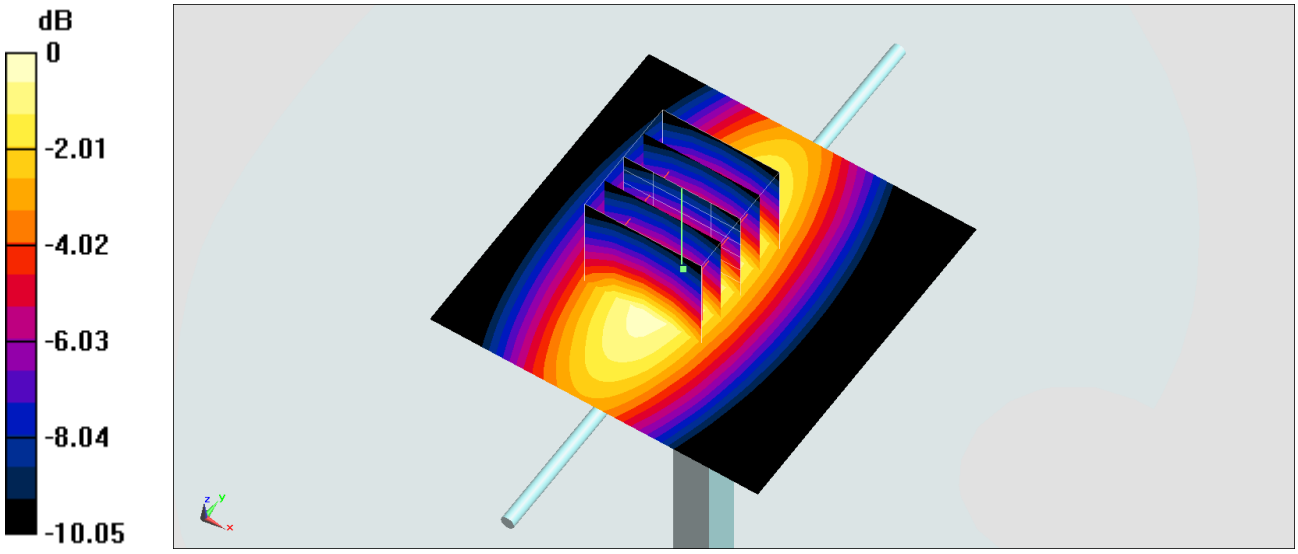

0 dB = 3.07 W/kg = 4.87 dBW/kg

Test Laboratory: Sporton International Inc. SAR/HAC Testing Lab Date: 2020/8/11

System Check_Head_835MHz

DUT: D835V2-4d167

Communication System: CW ; Frequency: 835 MHz;Duty Cycle: 1:1
Medium: HSL_850_200811 Medium parameters used: f = 835 MHz; σ = 0.922 S/m; ε_r = 41.333; ρ = 1000 kg/m^3
Ambient Temperature：23.6 ℃; Liquid Temperature：22.6 ℃

DASY5 Configuration:
- Probe: ES3DV3 - SN3270; ConvF(6.43, 6.43, 6.43) @ 835 MHz; Calibrated: 2019/9/25
- Sensor-Surface: 3mm (Mechanical Surface Detection)
- Electronics: DAE4 Sn1399; Calibrated: 2020/2/18
- Phantom: SAM_Left; Type: SAM; Serial: 1796
- Measurement SW: DASY52, Version 52.10 (4);SEMCAD X Version 14.6.14 (7483)

Pin=250mW/Area Scan (61x61x1): Interpolated grid: dx=1.500 mm, dy=1.500 mm
Maximum value of SAR (interpolated) = 2.94 W/kg

Pin=250mW/Zoom Scan (5x5x7)/Cube 0: Measurement grid: dx=8mm, dy=8mm, dz=5mm
Reference Value = 58.79 V/m; Power Drift = -0.15 dB
Peak SAR (extrapolated) = 3.71 W/kg
SAR(1 g) = 2.49 W/kg; SAR(10 g) = 1.63 W/kg
Maximum value of SAR (measured) = 2.91 W/kg

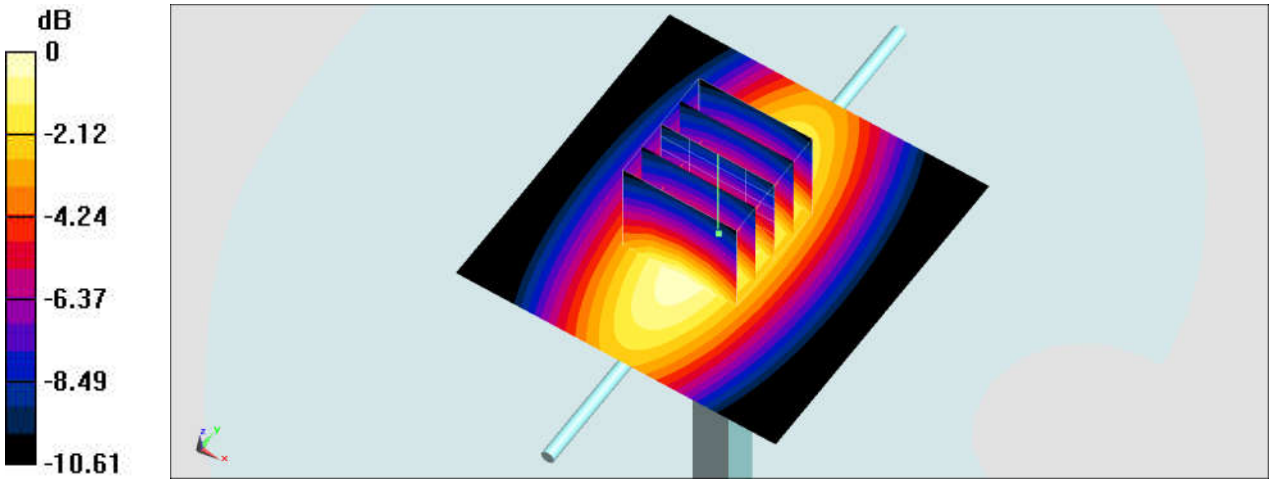

0 dB = 2.91 W/kg = 4.64 dBW/kg

System Check_Head_835MHz

DUT: D835V2-4d167

Communication System: CW; Frequency: 835 MHz;Duty Cycle: 1:1
Medium: HSL_850_200813 Medium parameters used: f = 835 MHz; σ = 0.898 S/m; ε_r = 42.44; ρ = 1000 kg/m^3
Ambient Temperature：23.3 ℃; Liquid Temperature：22.3 ℃

DASY5 Configuration:
- Probe: EX3DV4 - SN3728; ConvF(9.51, 9.51, 9.51) @ 835 MHz; Calibrated: 2020/2/4
- Sensor-Surface: 1.4mm (Mechanical Surface Detection)
- Electronics: DAE4 Sn699; Calibrated: 2020/2/26
- Phantom: SAM-Middle; Type: SAM; Serial: TP-1503
- Measurement SW: DASY52, Version 52.10 (4);SEMCAD X Version 14.6.14 (7483)

Pin=250mW/Area Scan (61x61x1): Interpolated grid: dx=1.500 mm, dy=1.500 mm
Maximum value of SAR (interpolated) = 3.09 W/kg

Pin=250mW/Zoom Scan (5x5x7)/Cube 0: Measurement grid: dx=8mm, dy=8mm, dz=5mm
Reference Value = 60.42 V/m; Power Drift = -0.12 dB
Peak SAR (extrapolated) = 3.49 W/kg
SAR(1 g) = 2.36 W/kg; SAR(10 g) = 1.56 W/kg
Maximum value of SAR (measured) = 3.11 W/kg

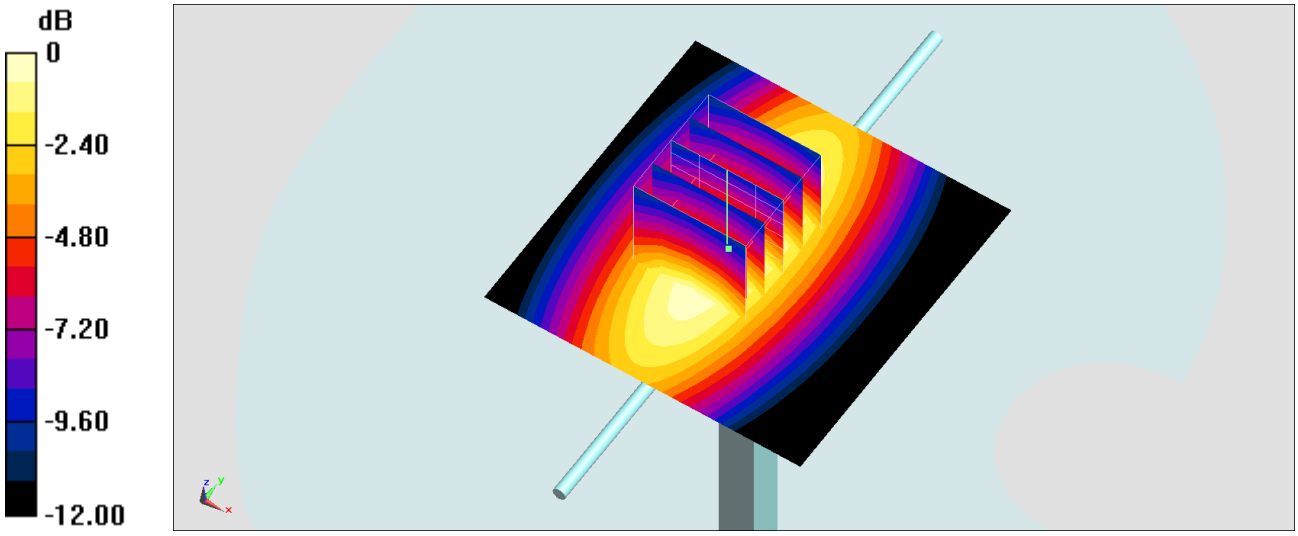

0 dB = 3.11 W/kg = 4.93 dBW/kg

System Check_Head_835MHz

DUT: D835V2-4d167

Communication System: CW ; Frequency: 835 MHz;Duty Cycle: 1:1
Medium: HSL_850_200813 Medium parameters used: f = 835 MHz; σ = 0.898 S/m; ε_r = 42.44; ρ = 1000 kg/m^3
Ambient Temperature：23.3 ℃; Liquid Temperature：22.3 ℃

DASY5 Configuration:
- Probe: ES3DV3 - SN3270; ConvF(6.43, 6.43, 6.43) @ 835 MHz; Calibrated: 2019/9/25
- Sensor-Surface: 3mm (Mechanical Surface Detection)
- Electronics: DAE4 Sn1399; Calibrated: 2019/11/14
- Phantom: SAM-Middle; Type: SAM; Serial: TP-1503
- Measurement SW: DASY52, Version 52.10 (4);SEMCAD X Version 14.6.14 (7483)

Pin=250mW/Area Scan (61x61x1): Interpolated grid: dx=1.500 mm, dy=1.500 mm
Maximum value of SAR (interpolated) = 2.86 W/kg

Pin=250mW/Zoom Scan (5x5x7)/Cube 0: Measurement grid: dx=8mm, dy=8mm, dz=5mm
Reference Value = 58.79 V/m; Power Drift = -0.15 dB
Peak SAR (extrapolated) = 3.61 W/kg
SAR(1 g) = 2.42 W/kg; SAR(10 g) = 1.59 W/kg
Maximum value of SAR (measured) = 2.83 W/kg

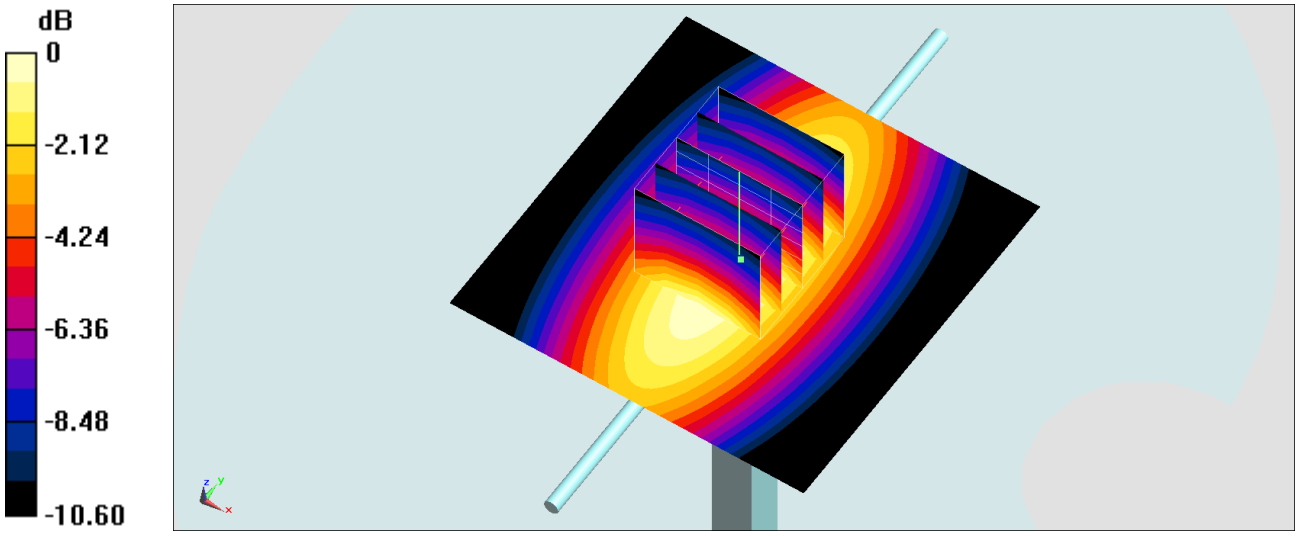

0 dB = 2.83 W/kg = 4.52 dBW/kg

System Check_Head_835MHz

DUT: D835V2-4d167

Communication System: CW ; Frequency: 835 MHz;Duty Cycle: 1:1
Medium: HSL_850_200826 Medium parameters used: f = 835 MHz; σ = 0.88 S/m; ε_r = 40.841; ρ = 1000 kg/m^3
Ambient Temperature：23.6 ℃; Liquid Temperature：22.6 ℃

DASY5 Configuration:
- Probe: ES3DV3 - SN3270; ConvF(6.43, 6.43, 6.43) @ 835 MHz; Calibrated: 2019/9/25
- Sensor-Surface: 3mm (Mechanical Surface Detection)
- Electronics: DAE4 Sn1399; Calibrated: 2019/11/14
- Phantom: SAM-Middle; Type: SAM; Serial: TP-1503
- Measurement SW: DASY52, Version 52.10 (4);SEMCAD X Version 14.6.14 (7483)

Pin=250mW/Area Scan (61x61x1): Interpolated grid: dx=1.500 mm, dy=1.500 mm
Maximum value of SAR (interpolated) = 2.80 W/kg

Pin=250mW/Zoom Scan (5x5x7)/Cube 0: Measurement grid: dx=8mm, dy=8mm, dz=5mm
Reference Value = 58.79 V/m; Power Drift = -0.05 dB
Peak SAR (extrapolated) = 3.54 W/kg
SAR(1 g) = 2.37 W/kg; SAR(10 g) = 1.55 W/kg
Maximum value of SAR (measured) = 2.77 W/kg

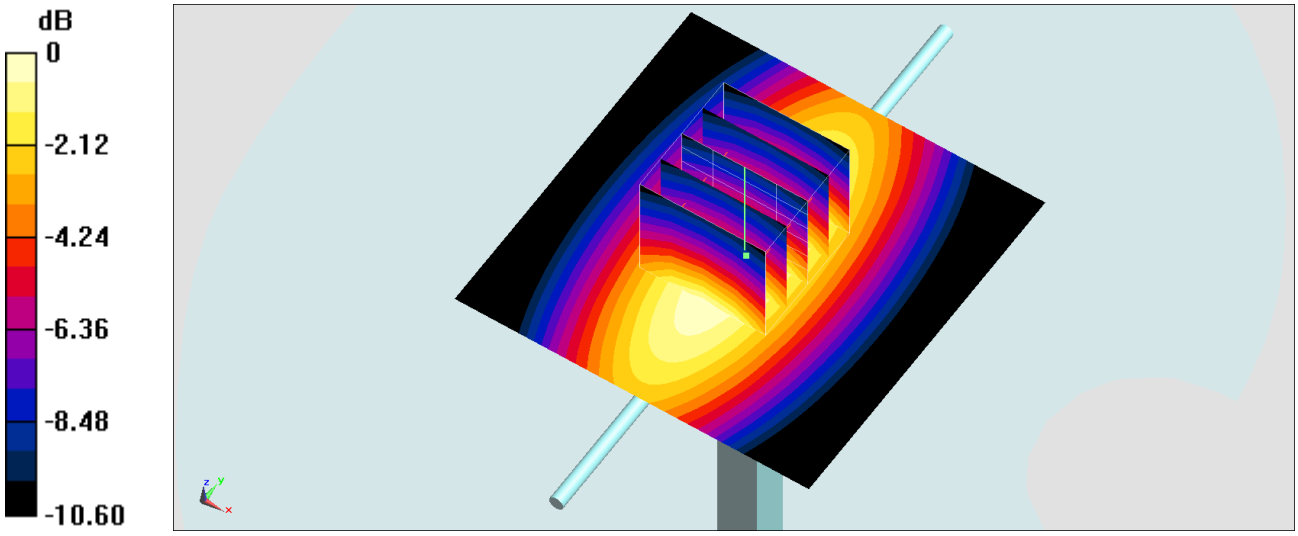

0 dB = 2.77 W/kg = 4.42 dBW/kg

System Check_Head_1900MHz

DUT: D1900V2-5d185

Communication System: CW; Frequency: 1900 MHz;Duty Cycle: 1:1
Medium: HSL_1900_200814 Medium parameters used: f = 1900 MHz; σ = 1.384 S/m; ε_r = 38.03; ρ = 1000 kg/m^3
Ambient Temperature：23.1 ℃; Liquid Temperature：22.1 ℃

DASY5 Configuration:
- Probe: ES3DV3 - SN3270; ConvF(5.2, 5.2, 5.2) @ 1900 MHz; Calibrated: 2019/9/25
- Sensor-Surface: 3mm (Mechanical Surface Detection)
- Electronics: DAE4 Sn1399; Calibrated: 2019/11/14
- Phantom: SAM-Middle; Type: SAM; Serial: TP-1503
- Measurement SW: DASY52, Version 52.10 (4);SEMCAD X Version 14.6.14 (7483)

Pin=250mW/Area Scan (61x61x1): Interpolated grid: dx=1.500 mm, dy=1.500 mm
Maximum value of SAR (interpolated) = 12.2 W/kg

Pin=250mW/Zoom Scan (5x5x7)/Cube 0: Measurement grid: dx=8mm, dy=8mm, dz=5mm
Reference Value = 94.06 V/m; Power Drift = 0.05 dB
Peak SAR (extrapolated) = 17.6 W/kg
SAR(1 g) = 9.55 W/kg; SAR(10 g) = 4.94 W/kg
Maximum value of SAR (measured) = 12.1 W/kg

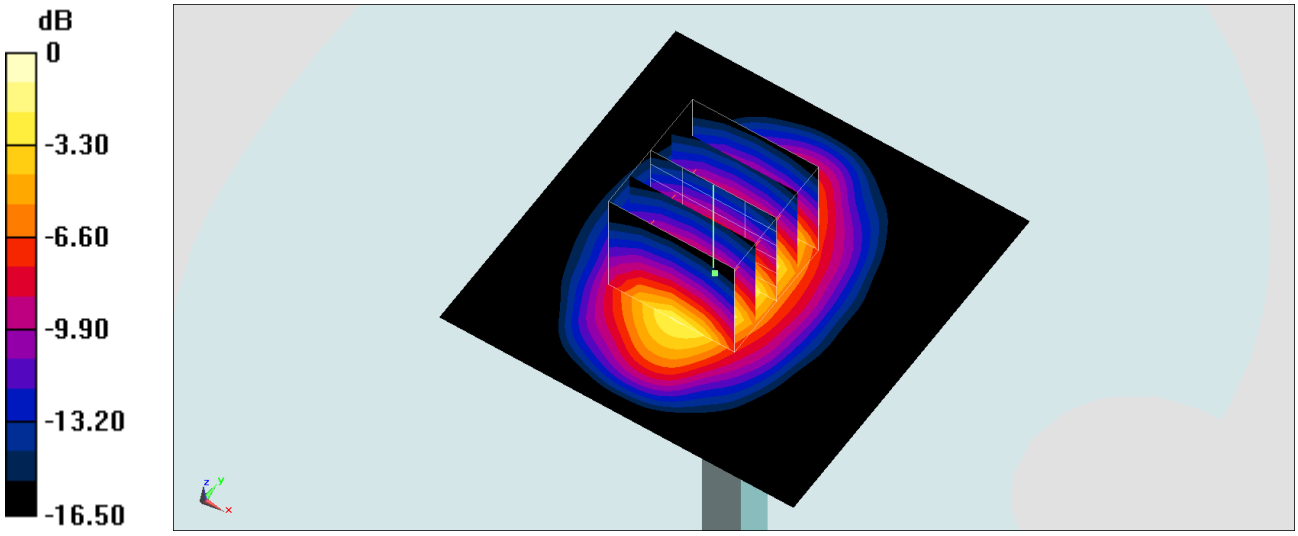

0 dB = 12.1 W/kg = 10.83 dBW/kg

Test Laboratory: Sporton International Inc. SAR/HAC Testing Lab Date: 2020/8/17

System Check_Head_2450MHz

DUT: D2450V2-736

Communication System: CW; Frequency: 2450 MHz;Duty Cycle: 1:1
Medium: HSL_2450_200817 Medium parameters used: f = 2450 MHz; σ = 1.792 S/m; ε_r = 40.032; ρ = 1000 kg/m^3
Ambient Temperature：23.7 ℃; Liquid Temperature：22.7 ℃

DASY5 Configuration:
- Probe: EX3DV4 - SN3728; ConvF(7.33, 7.33, 7.33) @ 2450 MHz; Calibrated: 2020/2/4
- Sensor-Surface: 1.4mm (Mechanical Surface Detection)
- Electronics: DAE4 Sn699; Calibrated: 2020/2/26
- Phantom: SAM_Left; Type: SAM; Serial: 1796
- Measurement SW: DASY52, Version 52.10 (4);SEMCAD X Version 14.6.14 (7483)

Pin=250mW/Area Scan (71x71x1): Interpolated grid: dx=1.200 mm, dy=1.200 mm
Maximum value of SAR (interpolated) = 22.9 W/kg

Pin=250mW/Zoom Scan (7x7x7)/Cube 0: Measurement grid: dx=5mm, dy=5mm, dz=5mm
Reference Value = 113.7 V/m; Power Drift = -0.09 dB
Peak SAR (extrapolated) = 28.3 W/kg
SAR(1 g) = 13.7 W/kg; SAR(10 g) = 6.34 W/kg
Maximum value of SAR (measured) = 23.0 W/kg

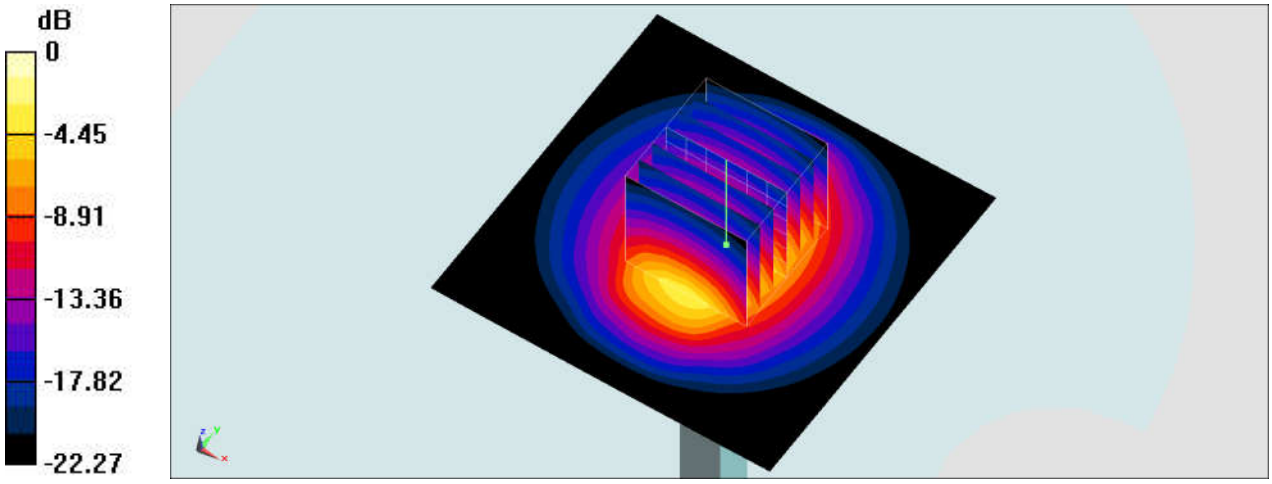

0 dB = 23.0 W/kg = 13.62 dBW/kg

System Check_Head_2450MHz

DUT: D2450V2 - SN929

Communication System: CW; Frequency: 2450 MHz;Duty Cycle: 1:1
Medium: HSL_2450_200818 Medium parameters used: f = 2450 MHz; σ = 1.816 S/m; ε_r = 38.951; ρ = 1000 kg/m^3
Ambient Temperature：23.6 ℃; Liquid Temperature：22.6 ℃

DASY5 Configuration:
- Probe: ES3DV3 - SN3270; ConvF(4.57, 4.57, 4.57) @ 2450 MHz; Calibrated: 2019/9/25
- Sensor-Surface: 3mm (Mechanical Surface Detection)
- Electronics: DAE4 Sn1399; Calibrated: 2019/11/14
- Phantom: SAM-Middle; Type: SAM; Serial: TP-1503
- Measurement SW: DASY52, Version 52.10 (4);SEMCAD X Version 14.6.14 (7483)

Pin=250mW/Area Scan (61x61x1): Interpolated grid: dx=1.200 mm, dy=1.200 mm
Maximum value of SAR (interpolated) = 19.3 W/kg

Pin=250mW/Zoom Scan (7x7x7)/Cube 0: Measurement grid: dx=5mm, dy=5mm, dz=5mm
Reference Value = 105.8 V/m; Power Drift = -0.06 dB
Peak SAR (extrapolated) = 29.7 W/kg
SAR(1 g) = 14.1 W/kg; SAR(10 g) = 6.46 W/kg
Maximum value of SAR (measured) = 18.3 W/kg

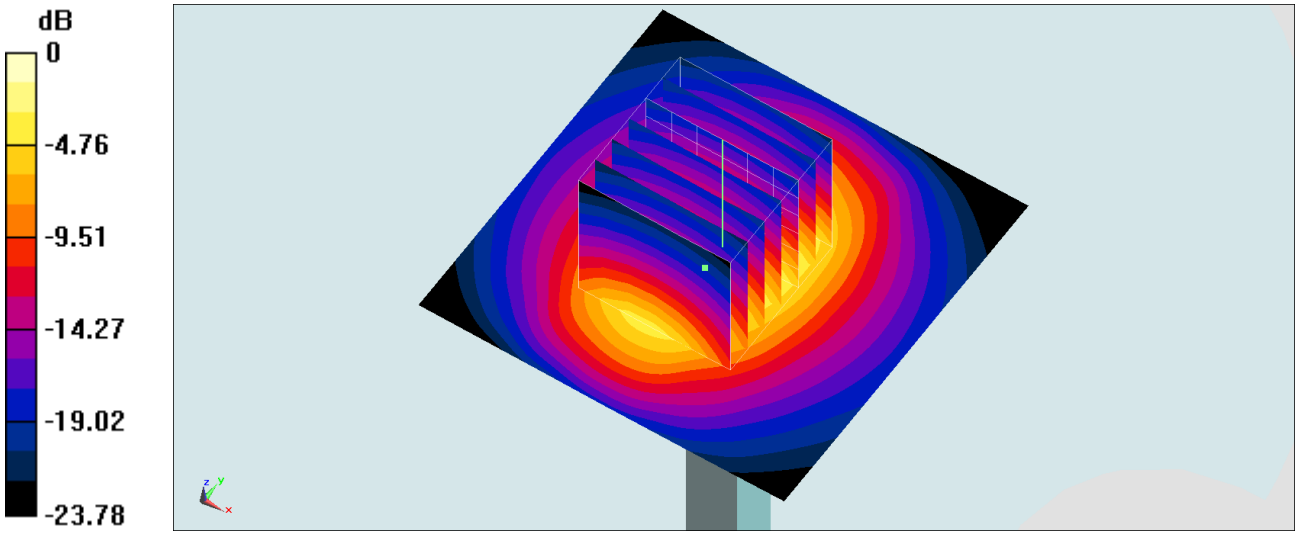

0 dB = 18.3 W/kg = 12.62 dBW/kg

System Check_Head_2450MHz

DUT: D2450V2-929

Communication System: CW; Frequency: 2450 MHz;Duty Cycle: 1:1
Medium: HSL_2450_200824 Medium parameters used: f = 2450 MHz; σ = 1.849 S/m; ε_r = 38.566; ρ = 1000 kg/m^3
Ambient Temperature：23.1 ℃; Liquid Temperature：22.1 ℃

DASY5 Configuration:
- Probe: ES3DV3 - SN3270; ConvF(4.57, 4.57, 4.57) @ 2450 MHz; Calibrated: 2019/9/25
- Sensor-Surface: 3mm (Mechanical Surface Detection)
- Electronics: DAE4 Sn1399; Calibrated: 2019/11/14
- Phantom: SAM-Middle; Type: SAM; Serial: TP-1503
- Measurement SW: DASY52, Version 52.10 (4);SEMCAD X Version 14.6.14 (7483)

Pin=250mW/Area Scan (61x61x1): Interpolated grid: dx=1.200 mm, dy=1.200 mm
Maximum value of SAR (interpolated) = 19.7 W/kg

Pin=250mW/Zoom Scan (7x7x7)/Cube 0: Measurement grid: dx=5mm, dy=5mm, dz=5mm
Reference Value = 105.8 V/m; Power Drift = -0.09 dB
Peak SAR (extrapolated) = 30.2 W/kg
SAR(1 g) = 14.3 W/kg; SAR(10 g) = 6.58 W/kg
Maximum value of SAR (measured) = 18.6 W/kg

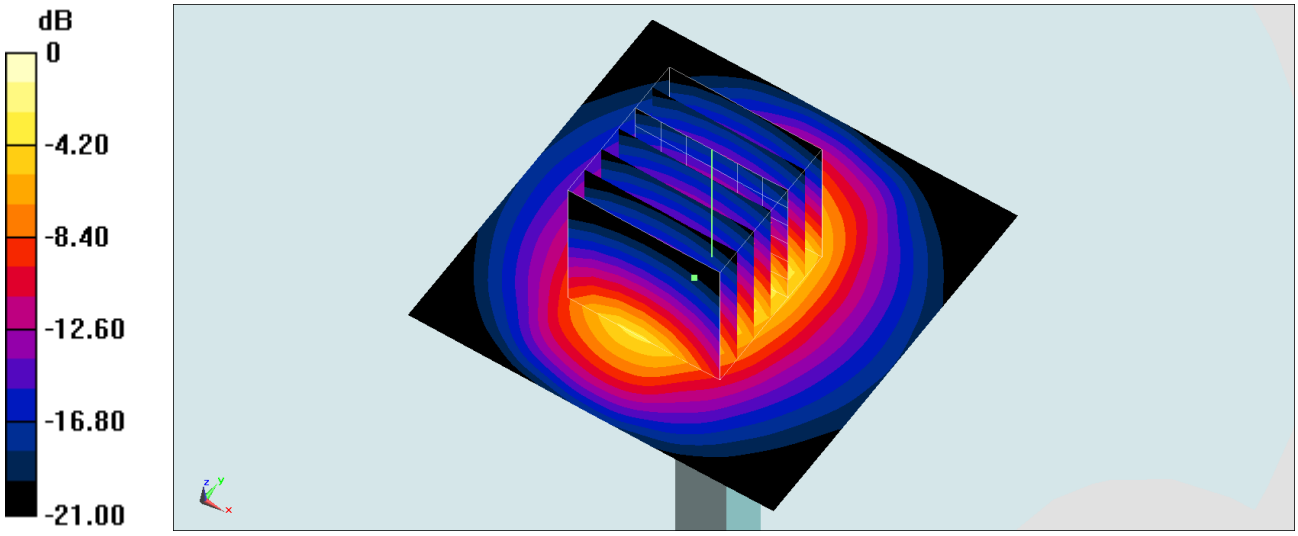

0 dB = 18.6 W/kg = 12.70 dBW/kg

System Check_Head_5250MHz

DUT: D5GHzV2-1006

Communication System: CW; Frequency: 5250 MHz;Duty Cycle: 1:1
Medium: HSL_5G_200821 Medium parameters used : f = 5250 MHz; σ = 4.824 S/m; ε_r = 36.61; ρ = 1000 kg/m^3
Ambient Temperature：23.4 ℃; Liquid Temperature：22.4 ℃

DASY5 Configuration:
- Probe: EX3DV4 - SN7515; ConvF(5.38, 5.38, 5.38) @ 5250 MHz; Calibrated: 2019/10/22
- Sensor-Surface: 1.4mm (Mechanical Surface Detection)
- Electronics: DAE4 Sn376; Calibrated: 2019/12/6
- Phantom: SAM_Right; Type: SAM; Serial: TP:1681
- Measurement SW: DASY52, Version 52.10 (4);SEMCAD X Version 14.6.14 (7483)

Pin=100mW/Area Scan (71x71x1): Interpolated grid: dx=1.000 mm, dy=1.000 mm
Maximum value of SAR (interpolated) = 18.7 W/kg

Pin=100mW/Zoom Scan (7x7x7)/Cube 0: Measurement grid: dx=4mm, dy=4mm, dz=1.4mm
Reference Value = 69.40 V/m; Power Drift = 0.07 dB
Peak SAR (extrapolated) = 31.8 W/kg
SAR(1 g) = 8.03 W/kg; SAR(10 g) = 2.24 W/kg
Maximum value of SAR (measured) = 19.7 W/kg

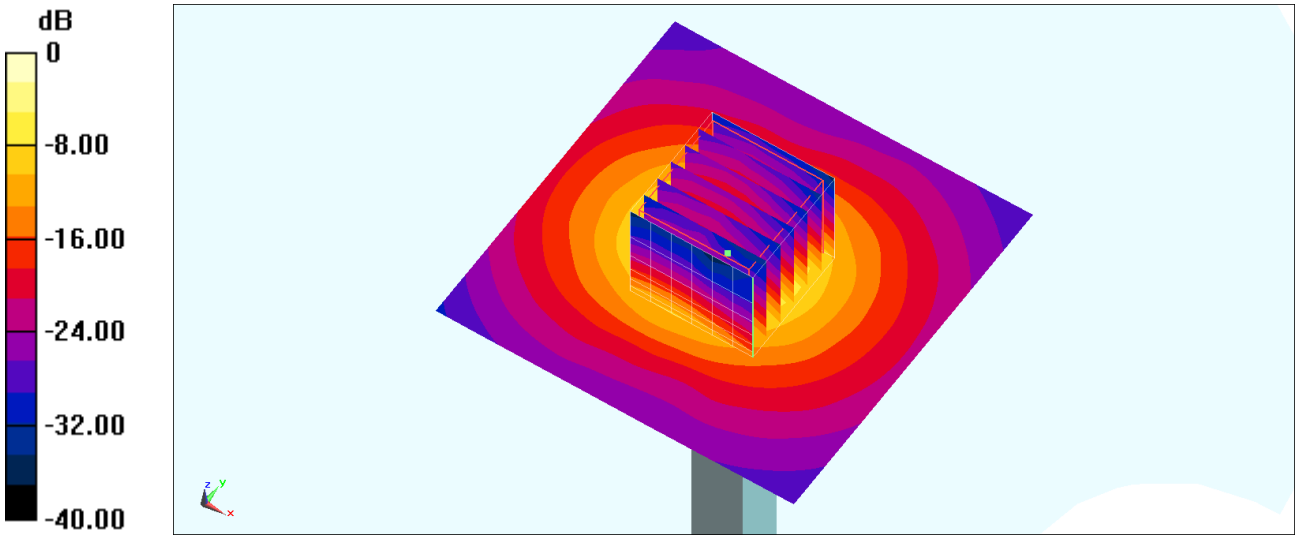

0 dB = 19.7 W/kg = 12.94 dBW/kg

System Check_Head_5600MHz

DUT: D5GHzV2-1006

Communication System: CW; Frequency: 5600 MHz;Duty Cycle: 1:1
Medium: HSL_5G_200821 Medium parameters used: f = 5600 MHz; σ = 5.175 S/m; ε_r = 36.135; ρ = 1000 kg/m^3
Ambient Temperature：23.4 ℃; Liquid Temperature：22.4 ℃

DASY5 Configuration:
- Probe: EX3DV4 - SN7515; ConvF(4.77, 4.77, 4.77) @ 5600 MHz; Calibrated: 2019/10/22
- Sensor-Surface: 1.4mm (Mechanical Surface Detection)
- Electronics: DAE4 Sn376; Calibrated: 2019/12/6
- Phantom: SAM_Right; Type: SAM; Serial: TP:1681
- Measurement SW: DASY52, Version 52.10 (4);SEMCAD X Version 14.6.14 (7483)

Pin=100mW/Area Scan (71x71x1): Interpolated grid: dx=1.000 mm, dy=1.000 mm
Maximum value of SAR (interpolated) = 21.8 W/kg

Pin=100mW/Zoom Scan (7x7x7)/Cube 0: Measurement grid: dx=4mm, dy=4mm, dz=1.4mm
Reference Value = 72.57 V/m; Power Drift = 0.05 dB
Peak SAR (extrapolated) = 38.4 W/kg
SAR(1 g) = 8.97 W/kg; SAR(10 g) = 2.48 W/kg
Maximum value of SAR (measured) = 22.6 W/kg

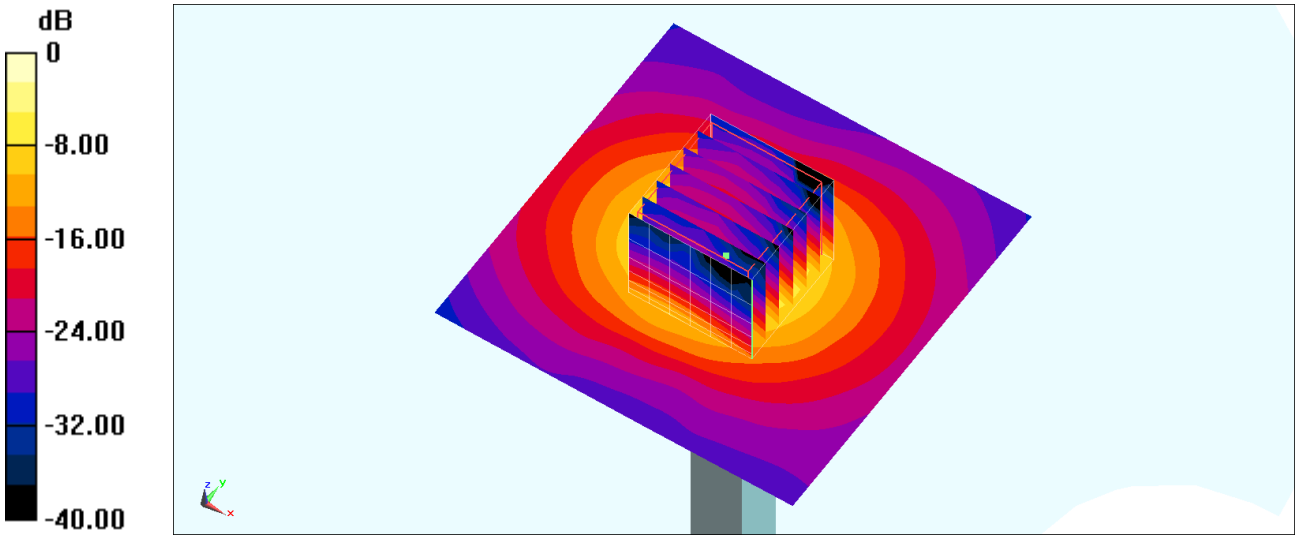

0 dB = 22.6 W/kg = 13.54 dBW/kg

System Check_Head_5600MHz

DUT: D5GHzV2-1006

Communication System: CW; Frequency: 5600 MHz;Duty Cycle: 1:1
Medium: HSL_5G_200914 Medium parameters used: f = 5600 MHz; σ = 5.093 S/m; ε_r = 36.364; ρ = 1000 kg/m^3
Ambient Temperature：23.6 ℃; Liquid Temperature：22.6 ℃

DASY5 Configuration:
- Probe: EX3DV4 - SN7515; ConvF(4.77, 4.77, 4.77) @ 5600 MHz; Calibrated: 2019/10/22
- Sensor-Surface: 1.4mm (Mechanical Surface Detection)
- Electronics: DAE4 Sn376; Calibrated: 2019/12/6
- Phantom: SAM_Right; Type: SAM; Serial: TP:1681
- Measurement SW: DASY52, Version 52.10 (4);SEMCAD X Version 14.6.14 (7483)

Pin=100mW/Area Scan (71x71x1): Interpolated grid: dx=1.000 mm, dy=1.000 mm
Maximum value of SAR (interpolated) = 21.4 W/kg

Pin=100mW/Zoom Scan (7x7x7)/Cube 0: Measurement grid: dx=4mm, dy=4mm, dz=1.4mm
Reference Value = 72.57 V/m; Power Drift = 0.05 dB
Peak SAR (extrapolated) = 37.8 W/kg
SAR(1 g) = 8.83 W/kg; SAR(10 g) = 2.44 W/kg
Maximum value of SAR (measured) = 22.2 W/kg

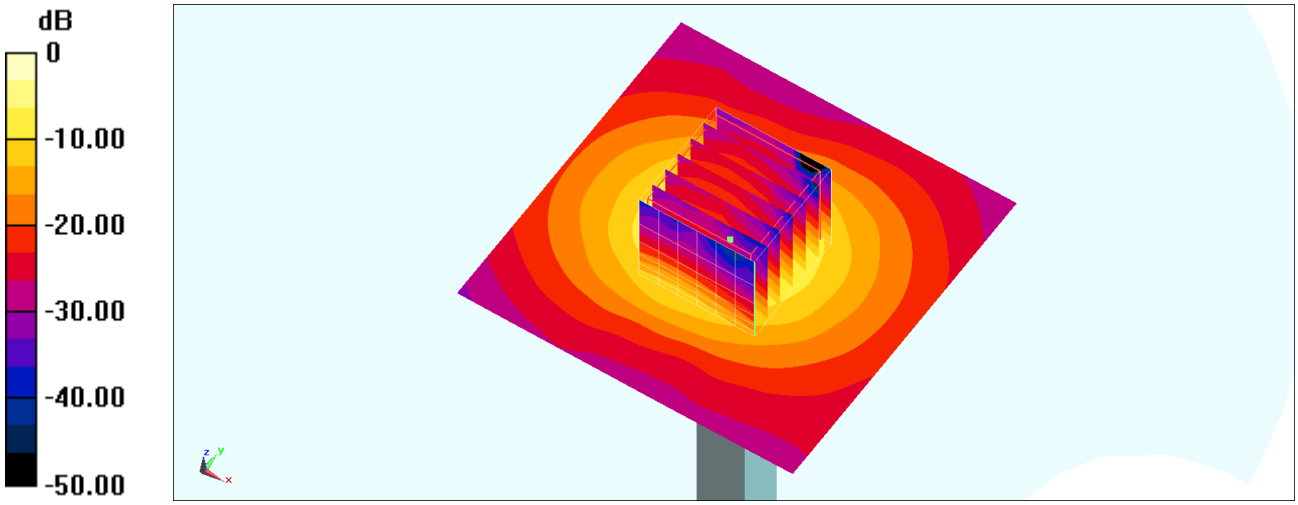

0 dB = 22.2 W/kg = 13.46 dBW/kg