TEST REPORT
FOR NFC TESTING

Report No: SRTC2020-9004(F)-20123101(N)

Product Name: Smart phone

Applicant: Sharp Corporation

Manufacturer: Sharp Corporation

Specification: CFR 47, Part 15, Sections 15.225, 15.207,15.215

FCC ID: APYHRO00294

The State Radio_monitoring_center Testing Center (SRTC)

15th Building, No.30, Shixing Street, Shijingshan District, Beijing, P.R.China

Tel: 86-10-57996183 Fax: 86-10-57996388

CONTENTS

1. GENERAL INFORMATION 2
1.1 Notes of the test report 2
1.2 Information about the testing laboratory 2
1.3 Applicant's details 2
1.4 Manufacturer's details 2
1.5 Test environment 3
2. DETAILS OF EQUIPMENT UNDER TEST 4
2.1 Final equipment builds status 4
2.2 Support equipment 4
3. REFERENCE SPECIFICATION 5
4. KEY TO NOTES AND RESULT CODES 5
5. RESULT SUMMARY 6
6. TEST RESULTS 7
6.1 Occupied Bandwidth 7
6.2 In-band emission 9
6.3 Radiated emission 9 kHz to 30 MHz 11
6.4 Radiated emission 30 MHz to 1 GHz 13
6.5 Carrier frequency stability 15
7. MEASUREMENT UNCERTAINTIES 16
8. TEST EQUIPMENT 17
ANNEX A – Test Result 18

1. GENERAL INFORMATION

1.1 Notes of the test report

The test report may only be reproduced or published in full. Reproduction or publication of extracts from the report requires the prior written permission of The State Radio_monitoring_center Testing Center (SRTC).The test results relate only to individual items of the samples which have been tested. The certification and accreditation identifiers used in this report shall not be applicable to the tested or calibrated samples thereof. The manufacturer shall not mark the tested samples or items (or a separate part of the item) with the identifiers of certification and accreditation to mislead relevant parties about the tested samples or items.

1.2 Information about the testing laboratory

Company:	The State Radio_monitoring_center Testing Center (SRTC)
Address:	15th Building, No.30 Shixing Street, Shijingshan District, P.R.China
City:	Beijing
Country or Region:	P.R.China
Contacted person:	Liu Jia
Tel:	+86 10 57996183
Fax:	+86 10 57996388
Email:	liujiaf@srtc.org.cn

1.3 Applicant's details

Company:	Sharp Corporation
Address:	1 Takumi-cho, Sakai-ku, Sakai City,Osaka 590-8522,Japan
City:	Osaka
Country or Region:	Japan
Contacted person:	Mr.Masaaki Nishikawa

1.4 Manufacturer's details

Company:	Sharp Corporation
Address:	1 Takumi-cho, Sakai-ku, Sakai City,Osaka 590-8522,Japan
City:	Osaka
Country or Region:	Japan
Contacted person:	Mr.Masaaki Nishikawa

1.5 Test environment

Date of Receipt of test sample at SRTC:	2021-02-25
Testing Start Date:	2021-03-01
Testing End Date:	2021-03-19

Environmental Data:	Temperature (°C)	Humidity (%)
Ambient:	23	32
Maximum Extreme	50	---
Minimum Extreme	-30	---

Normal Supply Voltage (V d.c.):	4.0
Maximum Supply Voltage (V d.c.):	4.0
Minimum Supply Voltage (V d.c.):	3.7

2. DETAILS OF EQUIPMENT UNDER TEST

2.1 Final equipment builds status

Operating Frequency	13.56 MHz
Antenna Type	PIFA
Modulation Type	ASK
Power Supply	Battery or Charger
HW Version	DVT (Remodeled to the equivalent of MP products)
SW Version	01.00.00
IMEI	004401230191088

2.2 Support equipment

The following support equipment was used to exercise the EUT during testing:

Equipment:	Battery
Manufacturer:	Tohoku murata manufacturing
Model Number:	UBATIA306AFN1

Equipment:	Charger
Manufacturer:	DVE
Model Number:	DSA-10PF06-05 FUS

Equipment:	Headset
Manufacturer:	DONGGUAN AMBIAI
Model Number:	AB-HI02SJ

Equipment:	Headset
Manufacturer:	Panasonic
Model Number:	RP-HJS150-K

Equipment:	USB Cable
Manufacturer:	Kingpower
Model Number:	K201-05130-00

3. REFERENCE SPECIFICATION

Specification	Version	Title
2.202(a)	2020	Occupied bandwidth
15.225(a)-(c)	2020	In-band emission
15.225(d)	2020	Radiated emission 9 kHz to 30 MHz
15.205(b) 15.225(d)	2020	Radiated emission 30 MHz to 1 GHz
15.225(e)	2020	Carrier frequency stability
ANSI C63.10	2013	Standard of Procedures for Compliance Testing of Unlicensed Wireless Devices

4. KEY TO NOTES AND RESULT CODES

Code	Meaning
PASS	Test result shows that the requirements of the relevant specification have been met.
FAIL	Test result shows that the requirements of the relevant specification have not been met.
N/A	Test case is not applicable.
N/T	Test case is not tested.

5. RESULT SUMMARY

NO.	Item	Results
1	Occupied bandwidth	Pass
2	Conducted emission test	N/T
3	In-band emission	Pass
4	Radiated emission 9 kHz to 30 MHz	Pass
5	Radiated emission 30 MHz to 1 GHz	Pass
6	Carrier frequency stability	Pass

This Test Report Is Issued by: Mr. Peng Zhen	Checked by: Mr. Li Bin
Tested by: Mr. Tong Daocheng	Issued date: 20210403

6. TEST RESULTS

6.1 Occupied Bandwidth

6.1.1 Test conditions and test configuration

The occupied bandwidth according to CFR 47 Part 2, section 2.202(a), is measured as the 99% emission bandwidth, i.e. below its lower and above its upper frequency limits, the mean powers radiated are each equal to 0.5% of the total mean power radiated by a given emission.

The occupied bandwidth according to ANSI C63.10, section 6.9.1; is measured as the frequency range defined by the points that are 20 dB down relative to the maximum level of the modulated carrier.

The span range of the spectrum analyzer display shall be between two times and five times of the occupied bandwidth. The resolution bandwidth of the spectrum analyzer should be approximately 1% to 5% of the occupied bandwidth, unless otherwise specified, depending on the applicable requirement.

The video bandwidth shall be at least three times greater than the resolution bandwidth. The dynamic range of the spectrum analyzer at the selected resolution bandwidth shall be more than 10 dB below the target “dB down” (attenuation) requirement.

If antenna is detachable bandwidth measurements shall be performed at the antenna connector (conducted measurement) when the transmitter is adjusted in accordance with the tune-up procedure, if applicable. The RF output terminals are connected to a spectrum analyzer. If required, a resistive matching network equal to the impedance specified or employed for the antenna is used as well as dc block and appropriate attenuators (50 Ohms). The electrical characteristics of the radio frequency load attached to the output terminals shall be stated, if applicable. If radiated measurements are performed the same test setups and instruments are used as with radiated emission measurements for the appropriate frequency range.

The analyzer settings are specified by the test description of the appropriate test record(s).

6.1.2 Test limit

The 20 dB bandwidth shall be specified in operating frequency band.

6.1.3 Test data

20 dBc Point(Low)	20 dBc Point(High)	Operating Frequency Band(MHz)	Pass/Fail
13.55609MHz	13.56507MHz	13.556-13.567	Pass

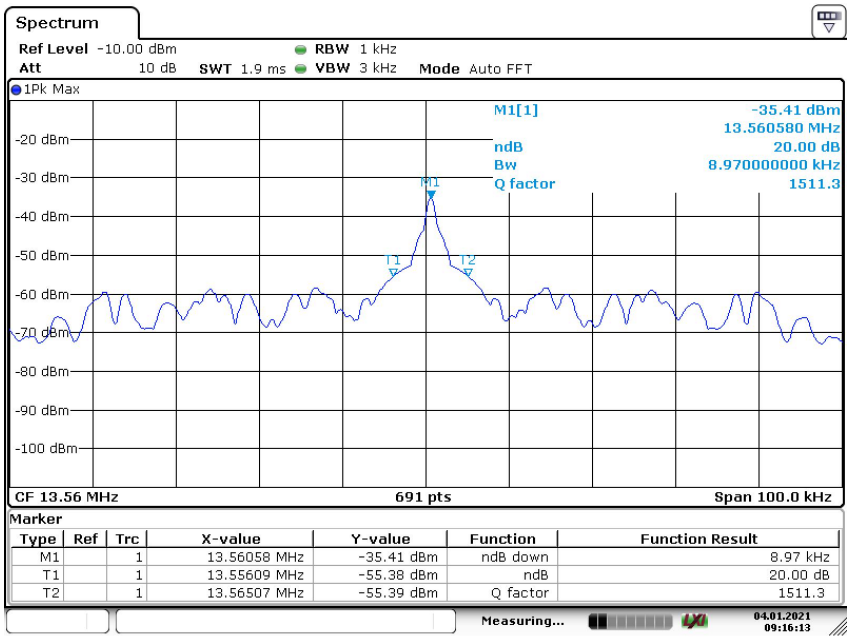

Date: 4.JAN.2021 09:16:13

6.2 In-band emission

6.2.1 Test conditions and test configuration

In the case of a transmitter with an integral or dedicated antenna, the radiated H-field is defined in the direction of maximum field strength under specified conditions of measurement.

The measurements shall be made on an open field test site as specified in standard. Any measured values shall be at least 6 dB above the ambient noise level.

The H-field produced by the equipment shall be measured at standard distance of 10 m. Where this is not practical, e.g. due to physical size of the equipment including the antenna or with use of special field cancelling antenna, then other distances may be used. When another distance is used, the distance used and the field strength value measured shall be stated in the test report. In this case, the measured value at actual test distance shall be extrapolated to 10 m and stated in the test report.

The H-field is measured with a shielded loop antenna connected to a measurement receiver. The measuring bandwidth and detector type of the measurement receiver shall be in accordance with standard.

The equipment under test shall be operated with modulation as defined in standard. For measuring equipment calibrated in dBμV, the reading should be reduced by 51,5 dB to be converted to dBμA/m.

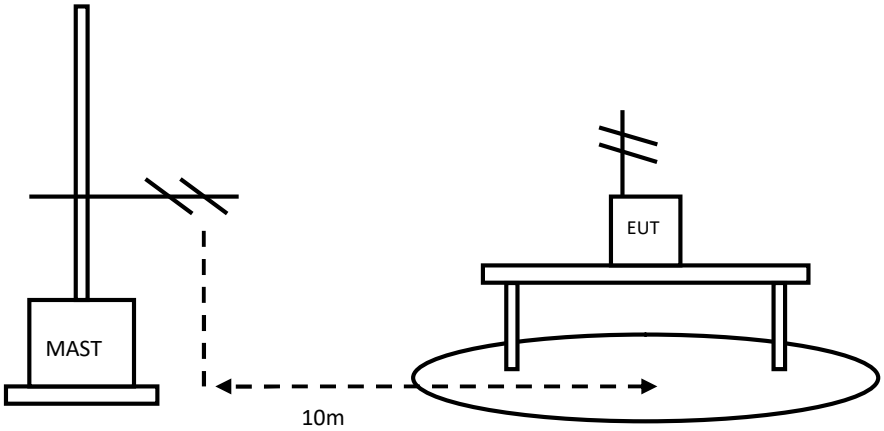

6.2.2 Test limit

(a) The field strength of any emissions within the band 13.553-13.567 MHz shall not exceed 15,848 microvolts/meter at 30 meters.

(b) Within the bands 13.410-13.553 MHz and 13.567-13.710 MHz, the field strength of any emissions shall not exceed 334 microvolts/meter at 30 meters.

(c) Within the bands 13.110-13.410 MHz and 13.710-14.010 MHz the field strength of any emissions shall not exceed 106 microvolts/meter at 30 meters.

6.2.3 Test data

The test results are shown in Appendix A .

6.3 Radiated emission 9 kHz to 30 MHz

6.3.1 Test conditions and test configuration

The measurements shall be made on an open field test site as specified in standard. Any measured values shall be at least 6 dB above the ambient noise level.

The H-field produced by the equipment shall be measured at standard distance of 10 m. Where this is not practical, e.g. due to physical size of the equipment including the antenna or with use of special field cancelling antenna, then other distances may be used. When another distance is used, the distance used and the field strength value measured shall be stated in the test report. In this case, the measured value at actual test distance shall be extrapolated to 10 m and stated in the test report.

The H-field is measured with a shielded loop antenna connected to a measurement receiver. The measuring bandwidth and detector type of the measurement receiver shall be in accordance with standard.

The equipment under test shall be operated with modulation as defined in standard. For measuring equipment calibrated in dBµV, the reading should be reduced by 51,5 dB to be converted to dBµA/m.

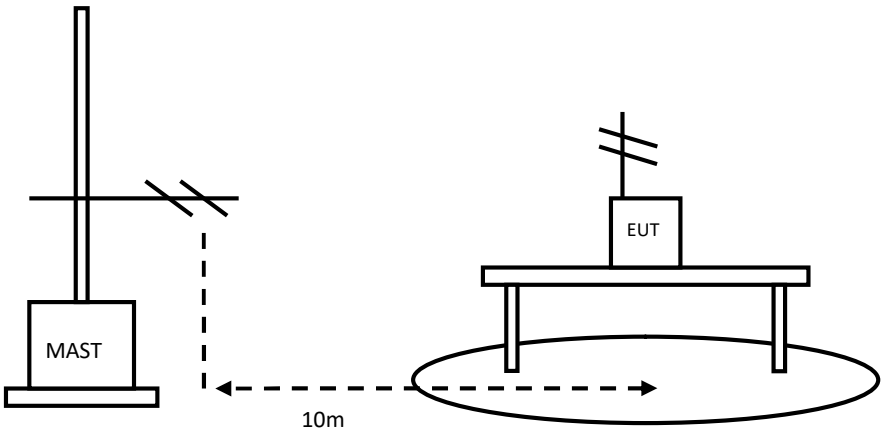

6.3.2 Test limit

(a) Except as provided elsewhere in this subpart, the emissions from an intentional radiator shall not exceed the field strength levels specified in the following table:

Frequency (MHz)	Field strength (microvolts/meter)	Measurement distance (meters)
0.009-0.490	2400/F(kHz)	300
0.490-1.705	24000/F(kHz)	30
1.705-30.0	30	30
30-88	100**	3
88-216	150**	3
216-960	200**	3
Above 960	500	3

**Except as provided in paragraph (g), fundamental emissions from intentional radiators operating under this section shall not be located in the frequency bands 54-72 MHz, 76-88 MHz, 174-216 MHz or 470-806 MHz. However, operation within these frequency bands is permitted under other sections of this part, e.g., §§15.231 and 15.241.

6.3.3 Test data

The test results are shown in Appendix A .

6.4 Radiated emission 30 MHz to 1 GHz

6.4.1 Test conditions and test configuration

The measurements shall be made on an open field test site as specified in standard. Any measured values shall be at least 6 dB above the ambient noise level.

The H-field produced by the equipment shall be measured at standard distance of 10 m. Where this is not practical, e.g. due to physical size of the equipment including the antenna or with use of special field cancelling antenna, then other distances may be used. When another distance is used, the distance used and the field strength value measured shall be stated in the test report. In this case, the measured value at actual test distance shall be extrapolated to 10 m and stated in the test report.

The H-field is measured with a shielded loop antenna connected to a measurement receiver. The measuring bandwidth and detector type of the measurement receiver shall be in accordance with standard.

The equipment under test shall be operated with modulation as defined in standard. For measuring equipment calibrated in dBµV, the reading should be reduced by 51,5 dB to be converted to dBµA/m.

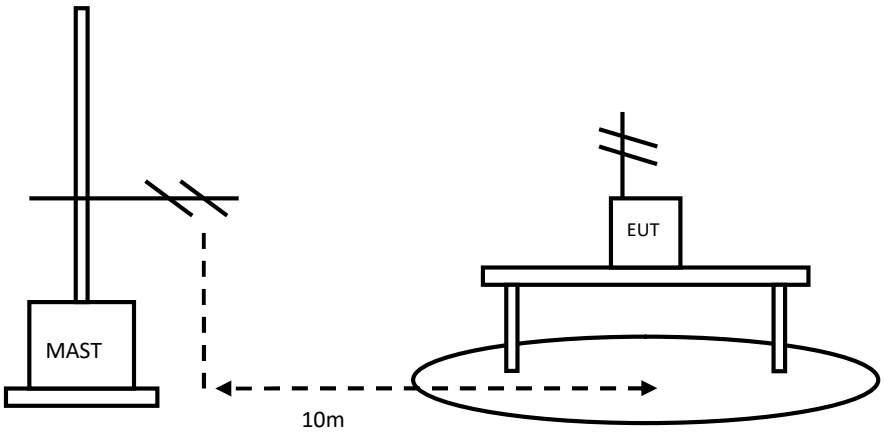

6.4.2 Test limit

(a) Except as provided elsewhere in this subpart, the emissions from an intentional radiator shall not exceed the field strength levels specified in the following table:

Frequency (MHz)	Field strength (microvolts/meter)	Measurement distance (meters)
0.009-0.490	2400/F(kHz)	300
0.490-1.705	24000/F(kHz)	30
1.705-30.0	30	30
30-88	100**	3
88-216	150**	3
216-960	200**	3
Above 960	500	3

**Except as provided in paragraph (g), fundamental emissions from intentional radiators operating under this section shall not be located in the frequency bands 54-72 MHz, 76-88 MHz, 174-216 MHz or 470-806 MHz. However, operation within these frequency bands is permitted under other sections of this part, e.g., §§15.231 and 15.241.

6.4.3 Test data

The test results are shown in Appendix A .

6.5 Carrier frequency stability

6.5.1 Test conditions and test configuration

(e) The frequency tolerance of the carrier signal shall be maintained within ±0.01% of the operating frequency over a temperature variation of −20 degrees to + 50 degrees C at normal supply voltage, and for a variation in the primary supply voltage from 85% to 115% of the rated supply voltage at a temperature of 20 degrees C. For battery operated equipment, the equipment tests shall be performed using a new battery.

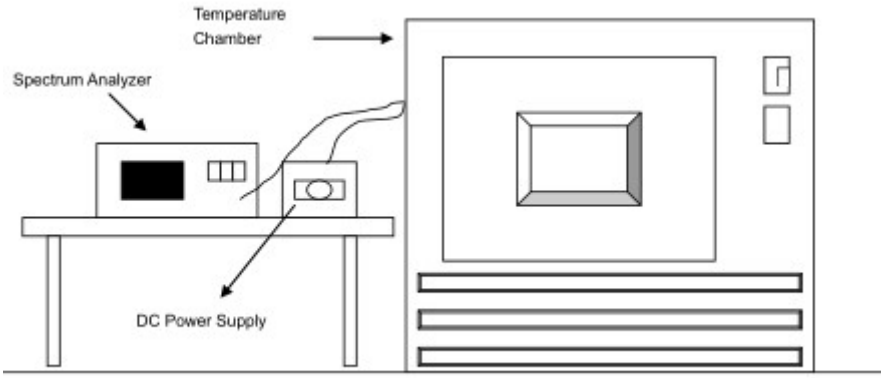

6.5.2 Test limit

±0.01%

6.5.3 Test data

Voltage(V)	Temperature(°C)	Frequency (MHz)	Measured Frequency (MHz)	Frequency Stability (ppm)
4.0	50	13.56	13.560009	0.66
4.0	40	13.56	13.559993	-0.52
4.0	30	13.56	13.560014	1.03
4.0	20	13.56	13.560007	0.52
4.0	10	13.56	13.559990	-0.74
4.0	0	13.56	13.559994	-0.44
4.0	-10	13.56	13.559986	-1.03
4.0	-20	13.56	13.560006	0.44
4.0	-30	13.56	13.559997	-0.22
3.7	20	13.56	13.560001	0.07

7. MEASUREMENT UNCERTAINTIES

Item	Uncertainty
Occupied Bandwidth	0.30 kHz
Carrier frequency stability	1×10^{-8}
Radiated Emission Measurements 9kHz～30MHz	4.88 dB
Radiated Emission Measurements 30MHz～1GHz	4.86 dB

Uncertainty figures are valid to a confidence level of 95%, k=2

8. TEST EQUIPMENT

No.	Equipment Name Model	Manufacturer	Serial Number	Calibration Date	Calibration Due Date
1.	FSV-SIGNAL ANALYZER	R&S	101065	2020.08.20	2021.08.19
2.	Chamber	ESPEC	92013758	2020.08.20	2021.08.19
3.	Cable 104EA	SUCOFLEX	9272/4EA	2020.08.20	2021.08.19
4.	23.18m×16.88m×9.60m Semi-Anechoic Chamber	FRANKONIA	---	-----	-----
5.	Turn table Diameter:5m	HD	-----	-----	-----
6.	Antenna master SAC(MA4.0)	MATURO	-----	-----	-----
7.	9.080m×5.255m×3.525m Shielding room	FRANKONIA	-----	-----	-----
8.	HF 906 Double-Ridged Waveguide Horn Antenna	R&S	100030	2020.08.20	2021.08.19
9.	HL562 Ultra log antenna	R&S	100016	2020.08.20	2021.08.19
10.	3160-09 Receive antenna	SCHWARZ-BECK	002058-002	2020.08.20	2021.08.19
11.	ESI 40 EMI test receiver	R&S	100015	2020.08.20	2021.08.19
12.	ESCS30 EMI test receiver	R&S	100029	2020.08.20	2021.08.19
13.	ESH3-Z5 LISN	R&S	100020	2020.08.20	2021.08.19
14.	HFH2-Z2	R&S	100340	2020.08.20	2021.08.19

ANNEX A – Test Result

Radiated Emission Measurement

Within the bands

Loop antenna at 3M

(a) The field strength of any emissions within the band 13.553-13.567 MHz shall not exceed 15,848 microvolts/meter at 30 meters.

(b) Within the bands 13.410-13.553 MHz and 13.567-13.710 MHz, the field strength of any emissions shall not exceed 334 microvolts/meter at 30 meters.

(c) Within the bands 13.110-13.410 MHz and 13.710-14.010 MHz the field strength of any emissions shall not exceed 106 microvolts/meter at 30 meters.

Frequency (MHz)	Field strength (dBuV/m)	Measurement distance (meters)
13.110-13.410	40.5	30
13.410-13.553	50.5	30
13.553-13.567	84	30
13.567-13.710	50.5	30
13.710-14.010	50.5	30

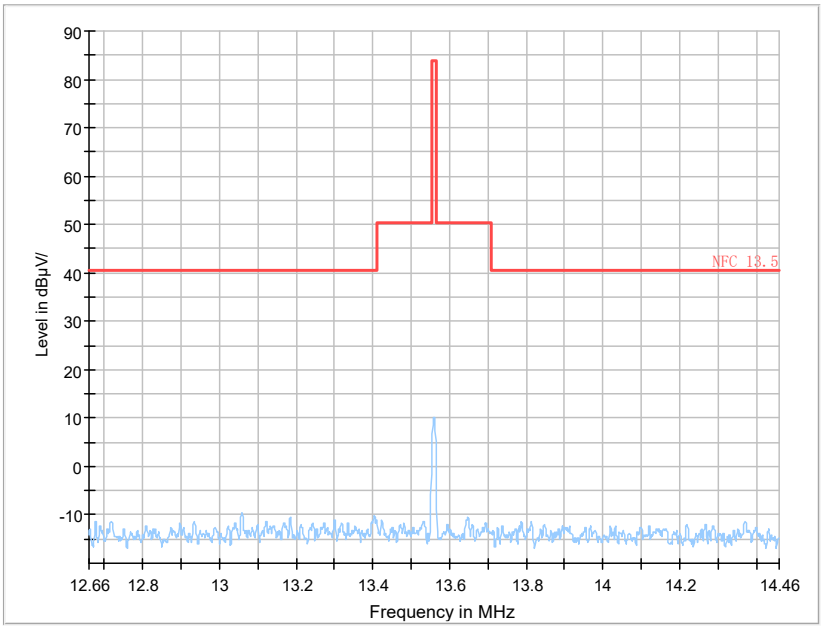

Outside of the 13.110-14.010 MHz band

Loop antenna and Ultra log antenna at 3M

Frequency (MHz)	Field strength (dBuV/m)	Measurement distance (meters)
0.009-0.490	2400/F(kHz)	300
0.490-1.705	24000/F(kHz)	30
1.705-30.0	30	30
30-88	100	3
88-216	150	3
216-960	200	3
Above 960	500	3

Frequency (MHz)	Result (dBuV/m)	ARpl (dB)	Pmea (dBuV/m)	Polarity	Limit (dBuV/m)
41.232000	15.39	-18.4	33.79	Vertical	40.00
66.734500	19.91	-21.1	41.01	Vertical	40.00
168.002500	16.78	-21.5	38.28	Vertical	43.50
216.017500	24.75	-18.8	43.55	Vertical	46.00
360.014000	30.01	-14.2	44.21	Vertical	46.00
996.568000	20.98	-2.1	23.08	Vertical	54.00

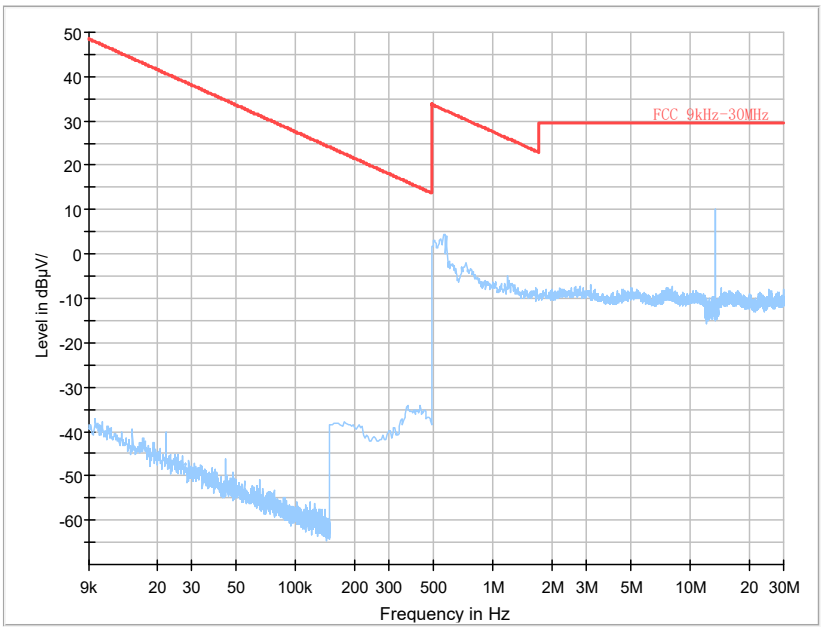

Frequency Range: 9kHz-30 MHz

Detector: QP mode

Full Spectrum

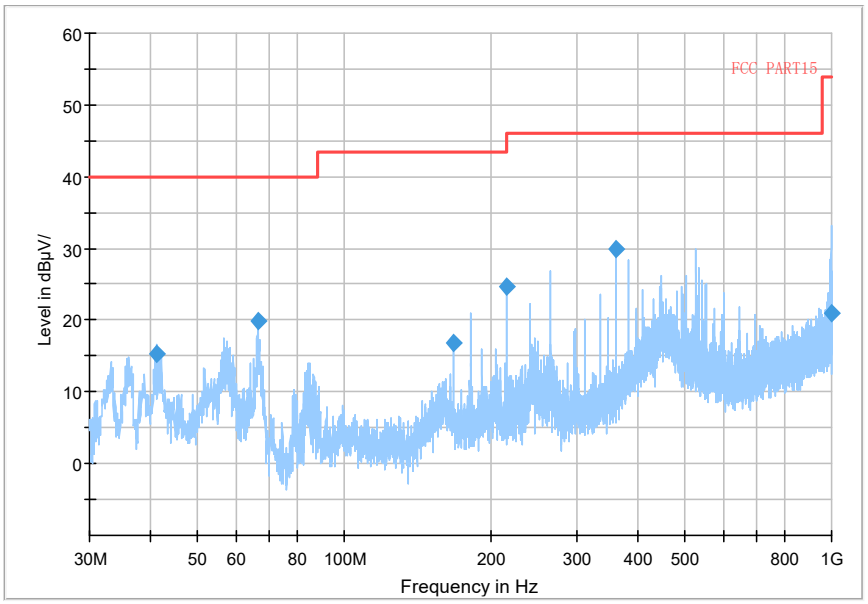

Frequency Range: 30MHz-1000 MHz

Detector: QP mode

---End of Test Report---