CHAPTER 4

Communication Functions

This chapter explains how to use the LAN, wireless LAN, and built-in modem functions.

- *When you use communication software:*
  - *Connect the computer to the AC power source.*
  - *Do not allow the computer enter a system standby or system hibernation mode. (See the* Power Saving *section on page 2-7.)*
  - *See also the manual or online help of the software you are using.*
- *The communication speed may vary depending on the traffic, local telecommunications infrastructure, and ISP (Internet Service Provider) infrastructure.*

Local Area Network (LAN)

You can connect to a LAN with the 100 Base-TX or 10 Base-T connector on the computer. To activate the LAN, perform the following steps.

Never insert any other cables, but a LAN cable, which may have different electric characteristics from those of the LAN cable. Otherwise, the LAN and the cables may be damaged.

Use the appropriate cable for each LAN standard.
100 Base-TX : Category 5 or higher
10 Base-T : Category 3 or higher

Connecting Your Computer to the LAN

1. Turn off the computer.
2. Connect a LAN cable to the LAN jack and the network hub.

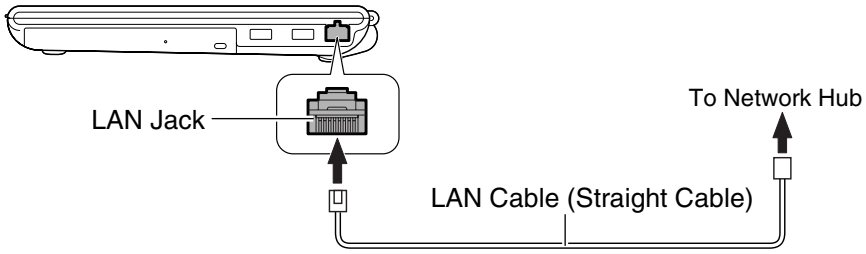

Do not insert a modem cable into the LAN jack. It may damage the modem cable and the LAN jack.

You can also directly communicate with another computer using a cross LAN cable.

3. Turn on the computer.

Removing the LAN cable

Before pulling the LAN cable out of the LAN jack, be sure to release the connector of the LAN cable by pressing the connector tab. Excessive force may damage the tab.

1. Turn off the computer.
2. Press and hold the connector tab of the LAN cable and then, pull out the cable.

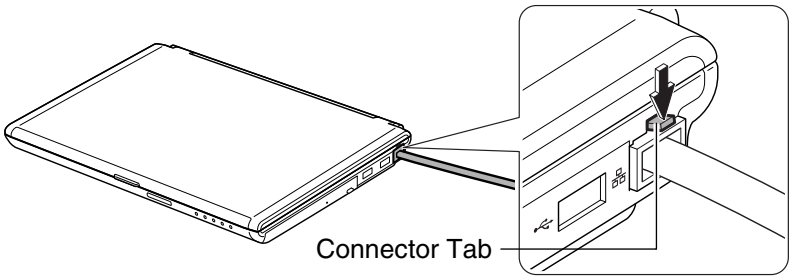

Configuring the LAN

1. Click *start - Control Panel*.
2. Click *Network and Internet Connections*; then, *Network Connections*. If the Classic view is selected, double-click the *Network Connections* icon.
3. Right-click *Local Area Connection*.
4. From the pop-up menu, click *Properties*.
5. In the *Local Area Connection Properties* dialog box, set the network setting according to the instruction of your network administrator.

Make sure to log on the computer as a member of the Computer administrators group. Otherwise, you cannot set or change some settings for the LAN unit.

If you cannot access the network,

1. Click *start - Control Panel*.
2. Click *Performance and Maintenance*; then, *System.* If the Classic view is selected, double-click the *System* icon.
3. Click the *Hardware* tab; then, the *Device Manager* button.
4. Double-click *Network adapters*, then, *Realtek RTL8139/810x Family Fast Ethernet NIC*.
5. Click the *Advanced* tab, and select *Link Speed/Duplex Mode* in the *Property* list and select an appropriate value in the *Value* pull-down menu.
6. Click *OK* and close the *Device Manager* window.
7. Click *OK* and close the *Control Panel* window.

Configuring Network Settings

You can configure your network settings in various manners depending on the network environment. This section provides one of them with the following conditions.

- Two computers, which do not have Internet connections, are connected directly to each other with a cross LAN cable.
- The two computers are running on Windows XP.
- The *Network Setup Wizard* is used for network configuration.

Configuring Network Settings of the Computer

- *Before configuring the network settings, be sure to connect the two computers with a cross LAN cable and turn them on.*
- *You need to perform the following process on the both computers.*

1. Click *start – Control Panel – Network and Internet Connections – Network Setup Wizard*. The *Network Setup Wizard* dialog box will open.
2. Click *Next*.
3. Click *Next* again.

When a message "The wizard found disconnected network hardware." appears:

- *With the* Local Area Connection *string displayed in the* Connections *field, click* Cancel *to quit the wizard and confirm the other computer is powered on or the both computers are connected correctly with a cross cable.*
- *Otherwise, check the box of* Ignore disconnected network hardware *and then, click* Next.

4. Select *Other* and click *Next*.
5. Select the third option, *This computer belongs to a network that does not have an Internet connection*, and click *Next*.
6. Select the second choice, *Let me choose the connections to my network*, and click *Next*.

When the message Give this computer a description and name *appears, go to the step 9.*

7. Clear all boxes except that of *Local Area Connection*.

Confirm only the box of Local Area Connection *is checked.*

8. Click *Next*.
9. Input *Computer description* if necessary and *Computer name*, then, click *Next*.

The Computer name *should be unique. Type a name that is different from that of the other computer.*

10. Type a *Workgroup name* and click *Next*.

The Workgroup name *should be same as that of the other computer.*

11. Select *Turn on file and printer sharing* and then, click *Next*.
12. Click *Next*. The network configuration will start.
13. Select the forth option, *Just finish the wizard; I don't need to run the wizard on other computers*, and click *Next*.
14. Click *Finish*, then, *Yes*. The computer will restart.

Changing Your Computer Name or Workgroup Name

When you need to change the computer name or workgroup name, follow these instructions.

1. Click *start – My Computer*.
2. Click *View system information* in the *System Tasks* field. The *System Properties* dialog box will open.
3. Click the *Computer Name* tab and the *Change…* button. The *Computer Name Changes* dialog box will appear.
4. Type the *Computer name* and the *Workgroup* and then, click *OK*.
5. Click *OK* twice and *Yes*. The computer will restart.

Sharing Files and Folders

You can share files and folders stored on the computer when they are permitted to share. With the function you can copy the documents stored on your desktop computer to your notebook computer or display from one computer on your computer.

Sharing Files and Folders

This section provides how to share a folder on the network. With these steps you can also share a drive.

1. Right-click on a folder to be shared and click *Sharing and Security….* The *XXX Properties* dialog box will open. (XXX is the folder's name.)
2. Check the box of *Share this folder on the network*. Confirm the name typed in the *Share name* field is the folder name to be shared.

When you have not used the Network Setup Wizard *or shared any folders or drives before, follow these instructions to enable file sharing.*

1. *Click* If you understand the security risks but want to share files without running the wizard, click here *in the* Network Sharing and Security *section. The* Enable File Sharing *dialog box will appear.*
2. *Select* Just enable file sharing *and click* OK.
3. *Check the box of* Share this folder on the network *and type the folder name to be shared in the* Share name *field.*

3. Click the *View your Windows Firewall settings* string.

When the string is not shown in the dialog box, go to the step 6.

4. Click the *Exceptions* tab and check the box of *File and Printer Sharing*.
5. Click *OK*.
6. Click *OK*.

A sharing symbol ( ) will be added to the icon of the shared folder.

Copying Shared Files

1. Click *start – Control Panel*.
2. Click *Network and Internet Connections*; then, *Network Connections.* If the Classic view is selected, double-click the *Network Connections* icon.
3. Click *My Network Places* in the *Other Places* field located on the left.
4. Click *View workgroup computers* in the *Network Tasks* field. All the icons of computers belonging to the same workgroup will appear.
5. Double-click the icon of the other computer. The shared folder(s) will appear.
6. Double-click the shared folder. When a password is required, type it.
7. Drag and drop the desired file to the desktop of your computer.

The file will be copied on your computer.

8. Close the window.

Wireless LAN

The computer has an integrated wireless LAN compliant with the IEEE802.11b and IEEE802.11g standards.

- *The computer can communicate with wireless devices supporting IEEE802.11b or IEEE802.11g. Note that there are some devices the computer cannot communicate with even if they support IEEE802.11b or IEEE802.11g.*
- *The computer cannot communicate with wireless devices only supporting IEEE802.11a.*
- *The range for reliable performance and the quality of connection varies depending on the environment you are in.*

Wireless LAN Modes

There are two kinds of wireless LAN modes: Infrastructure mode and Ad Hoc mode.

Access Point (Infrastructure) Mode

Infrastructure mode refers to a wireless network in which wireless devices communicate with each other through an access point (AP). Wireless devices can communicate with each other or can communicate with a wired network through AP.

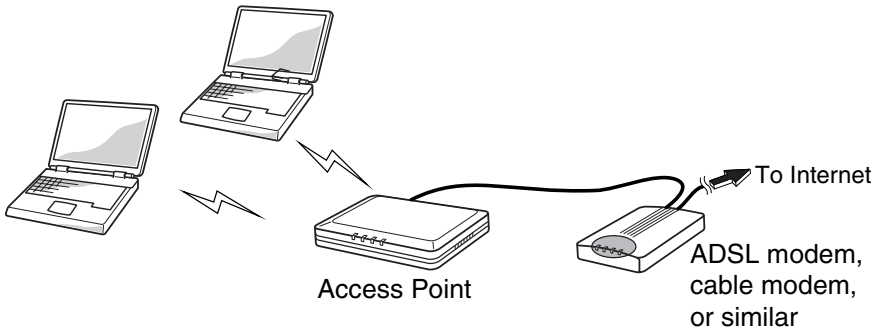

Ad Hoc Mode

Ad Hoc mode refers to a type of network that consists of multiple computers each equipped with a wireless networking interface. Each computer can communicate directly with other wireless enabled computers.

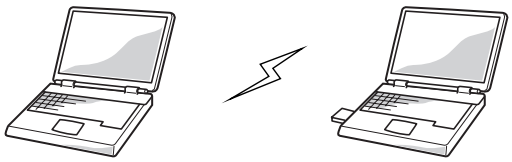

Security Measures

Since wireless LANs provide data transfer using electric waves instead of LAN cables between communicating devices, a third party can illegally access to and monitor the transmitted information. The following security measures reduce opportunities to receive the threats. Use a combination of the following measures for more secure communications.

See the Notice of Security with Wireless Devices *section on page xv.*

Authentication

The following may help you to protect your important data from illegal access.

- **SSID (Service Set Identifier)**

  "SSID" is a common network name. An SSID acts as a password that is shared with all connecting wireless devices, resulting in preventing access by any device that does not have the SSID. Set a same SSID on the computer and an access point which you are using. To enhance the security, rely on a combination of the SSID and WEP or WPA security. (For details on configuration of the access point, refer to its manual.)

- **MAC (Media Access Control) address filtering**

  MAC addresses are unique addresses on the network, which are assigned to the computer's network interface cards. An access point allows access by only devices if their MAC addresses match the addresses in an authentication list used by the access point. Register your MAC address with the access point which you are using. (For more information, refer to the manual of the access point.)

To confirm the MAC address of the computer;

1. *Click* start – All Programs – Accessories – Command Prompt.
2. *Type* ipconfig/all *and press* ***Enter***.
3. *Confirm the numbers of* Physical Address *in the* Ethernet adapter Wireless Network Connection *field.*
4. *Type* exit *and press* ***Enter***.

- **WPA (Wi-Fi Protected Access)**

  The computer supports WPA, a wireless LAN security standard increasing the level of data protection and access control compared to WEP (Wired Equivalent Privacy) encryption. To use the WPA security, a WPA-enabled access point is required. To implement user authentication, one of the security enhancements of WPA, an authentication server is needed. For details on WPA features, consult your network administrator or the manual of the access point which you are using.

Encryption

The computer provides the following encryption mechanisms including: TKIP, AES, and WEP. The three techniques allow you to encrypt data to be transmitted, which will make illegal interception more difficult.

- *To use the WEP functions, your communication partner must support the functions.*
- *To utilize TKIP, the access point which you are using must support TKIP.*
- *To utilize AES, the access point which you are using must support AES.*

- **WEP (Wired Equivalent Privacy)**

  WEP relies on an encryption key that is shared between a wireless device and an access point. The key is used to encrypt data and decrypt the transmitted data.

- *The computer supports 128-bit and 64-bit WEP keys.*
- *For enhancement of security, the encryption keys should be periodically changed.*

- **TKIP (Temporal Key Integrity Protocol)**

  TKIP provides an improved data encryption, which was weak in WEP. The TKIP encryption automatically generates a new unique encryption key periodically for each device to avoid the same key staying in use for weeks as they do with WEP.

- **AES (Advanced Encryption Standard)**

  AES is a stronger form of encryption than is found in the WPA protocol and is the security standard approved by US Government organizations.

Activating the Wireless LAN Antenna

To communicate using the wireless LAN, the integrated antenna must be activated. You can enable/disable the antenna by pressing the **Fn+F1** ( ) key combination. When the antenna indicator ( ) lights green, the antenna is enabled. When the indicator light is off, it is disabled.

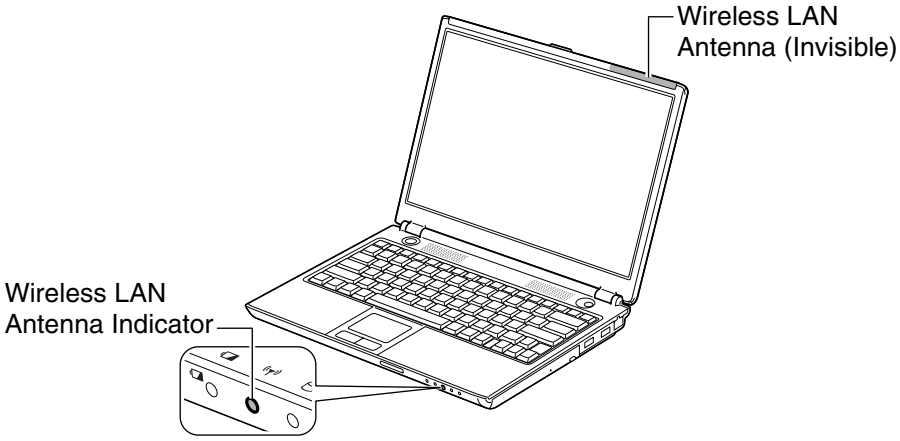

Disable the antenna on airplanes and in specific places where radio-susceptible equipment is nearby such as medical and electrical equipment. Electric waves generated from the antenna may affect the performance of the devices and cause malfunction of the devices.

When the Wireless LAN *of the APM button is set to* ON *or* OFF*, pressing the APM button will turn on or off the wireless LAN antenna according to the APM button setting. (For more information, refer to the* Using the Advanced Power Management Button *section on page 2-9.)*

Connecting to a Network via an Access Point

You can connect the computer to the Internet or a wired network via an access point supporting IEEE802.11b or IEEE802.11g. For details on the access point, refer to its manual or consult your network administrator.
This section describes how to communicate or access to the Internet through the access point.

Configuring the Wireless LAN Setting

The following steps lead you to configure the wireless LAN setting by automatically obtaining the IP address, DNS server, etc. from an access point. By default, no configuration is needed. Skip these steps and go to the *Connecting to Network* section on the next page.

- *There are some access points requiring the specific IP address, subnet mask, default gateway and DNS server on the computer. Refer to the manual of the access point or consult your network administrator.*
- *You can store the configured settings using Network Setup Utility, which allows you to easily access one of the stored networks appropriate to the current environment. (For the Network Setup Utility, refer to the* Network Setup Utility *section later in this chapter.)*

1. Confirm the antenna indicator (( ) is on.
2. Right-click the *Wireless Network Connection* icon (, or) on the taskbar. If you cannot find the icon click to show all kinds of icons.
3. Select *View Available Wireless Networks*.
4. Click *Change advanced settings* of the *Related Tasks* field.
5. Double-click *Internet Protocol (TCP/IP)* in *This connection uses the following items*.
6. Confirm the radio buttons of *Obtain an IP address automatically* and *Obtain DNS server address automatically* are selected. If not, select them.

This step will remove the existing IP address, subnet mask, default gateway and DNS server if they have been already assigned. Write down the information before you perform this step.

7. Click the *Advanced* button.
8. Confirm the *Default gateways* section is emptied. If not, remove the gateway address.
9. Click *OK* each time you close the dialog boxes.
10. Close the *Network Connections* window.

Connecting to a Network

This section describes how to connect to a WEP enabled access point or WPA-PSK/TKIP capable access point. (WPA-PSK/TKIP refers to WPA with pre-shared key (PSK) with Temporal Key Integrity Protocol (TKIP) encryption.) For access points with user authentication, consult your network administrator.

WPA-PSK is a special mode allowing only devices with a matching network key to access the WPA-PSK capable access point.

Before connecting to wireless network, confirm the access point which you are using is powered on and ready to use. (Refer to its manual.)

1. Confirm the antenna indicator ( ) is on.
2. Right-click the *Wireless Network Connection* icon ( ) on the taskbar. If you cannot find the icon click to show all kinds of icons.
3. Select *View Available Wireless Networks*.
4. Select a network to be connected from the list and then, click *Connect*.
5. Type the correct network key in the fields of *Network key* and *Confirm network key*.

   Network keys are generated from ASCII or hexadecimal entries. Refer to the following table for available letters and digits.

	WEP Access Point	WPA-PSK/TKIP or AES Access Point
ASCII format[*1]	5 or 13 characters	8 to 63 characters
Hexadecimal format[*2]	10 or 26 digits	64 digits

[*1] 0 to 9, a to z, and A to Z (The uppercase and lowercase letters are distinguished.)

[*2] 0 to 9, a to f, and A to F (The uppercase and lowercase letters are not distinguished.)

When you select a network that is not configured for encryption settings, the caution message appears. Read the message carefully. Although you can connect to the network by clicking Connect Anyway*, security is not ensured. Select a security configured network.*

6. Click *Connect*.

- *When the computer successfully connects to the selected access point, the* Connected *signage will appear in the connected network name field and the* Wireless Network Connection *icon ( ) on the taskbar will change to ( ).*
- *Entering an incorrect network key or selecting an inappropriate key index will show the* Limited or no connectivity *signage in the network name field and the icon on the taskbar will change to ( ). Reenter the correct network key and/or change the key index referring to the* Changing the Security Mode *section on page 4-17.*
- *To establish a new connection with another access point, first disconnect the current connection and then, perform the steps 3 and 4. (To disconnect the current connection, select the connected access point in the* Wireless Network Connection *dialog box and then, click the* Disconnect.*)*

Confirming the Status of Wireless Connection

The *Wireless Network Connection* icon on the taskbar shows the current wireless connection status.

Icon	Connection status
	Disconnected
	Trying to connect
	Connected
	Failed to connect

To check the connection speed and quality:

1. Click the *Wireless Network Connection* icon ( ) on the taskbar. If you cannot find the icon, click to show all kinds of icon.
2. In the *Wireless Network Connection Status* dialog box, confirm your connection status.

- *The number of the green signals ( ) shows the connection quality. The more signals light on, the better quality is given to the computer.*
- *When the connection quality is poor, adjust the distance between the computer and other devices or the access point you are communicating with and/or the facing direction of the computer.*

3. Click *Close*.

Communicating with Other Computers

This section describes how to communicate between wireless computers with built-in wireless LAN or a wireless LAN card installed.

To enable wireless communication between the computers;

- Assign IP address and subnet mask for each computer.
- Set the communication mode to ad hoc.
- Give the same network name (SSID) to each computer.
- Set the encryption key (WEP key).

TKIP and AES cannot be utilized in ad-hoc mode.

1. Confirm the antenna indicator ( ) is on.
2. Right-click the *Wireless Network Connection* icon (, , or) on the taskbar. If you cannot find the icon click to show all kinds of icons.
3. Select *View Available Wireless Networks*.
4. Click *Change advanced settings* of the *Related Tasks* field.
5. Select *Wireless Network Connection*; then, click *Change settings of this connection* of *Network Tasks*.
6. Double-click *Internet Protocol (TCP/IP)* in *This connection uses the following items.*
7. In the *Internet Protocol (TCP/IP) Properties* dialog box, select *Use the following IP address* and set the *IP address* to *192.168.1.2* through *192.168.1.254* and the *Subnet mask* to *255.255.255.0*; then, click *OK.*

- *The IP address of each computer should be unique.*
- *The same subnet mask should be set to all computers.*
- *The* Default gateway *can be blank.*

8. Click the *Wireless Networks* tab; then, the *Advanced* button in the lower right of the dialog box. The *Advanced* dialog box appears.
9. Select *Computer-to-computer (ad hoc) networks only*; then, click the *Close* button.
10. Click the *Add…* button in *Preferred networks* of the *Wireless Network Connection Properties* dialog box.
11. Type a name of the network in the *Network name (SSID)* field of the *Wireless Network Properties* dialog box.

Confirm the computer and other computers are assigned the same Network name.

12. Confirm *Open* is selected in the *Network Authentication* pull-down menu and *WEP* in the *Data encryption* pull-down menu.
13. Clear the box of *The key is provided for me automatically*.
14. Type the same network key as that of the partner in the *Network key* and *Confirm network key* fields.

    Network keys are generated from ASCII or hexadecimal entries. Refer to the following table for available letters and digits.

ASCII format[*1]	5 or 13 characters
Hexadecimal format[*2]	10 or 26 digits

[*1] 0 to 9, a to z, and A to Z (The uppercase and lowercase letters are distinguished.)
[*2] 0 to 9, a to f, and A to F (The uppercase and lowercase letters are not distinguished.)

- *The network key to be typed must be equal to that of the partner(s).*
- *Be sure to match the key index between your computer and the other computer(s). Note some computers have the key index options 0 through 3. Refer to the* Key index matching table *on page 4-18.*

15. Click *OK* twice; then, close the *Control Panel* window.
16. Configure the network by setting the name of the computer and workgroup.

- *To communicate with other wireless enabled computers, set the computer name and the workgroup name. The computer name should be unique and the workgroup name should be same as others. (Refer to the* Changing Your Computer Name or Workgroup Name *section on page 4-5.)*
- *To share the folder(s) on the computer with other computers, refer to the* Sharing Files and Folders *section on page 4-5.*

Changing the Security Mode

This section describes how to change the security mode to WEP or WPA-PSK with TKIP or AES.

When using the user authentication security technology, consult your network administrator for the mode changes.

WEP

1. Right-click the *Wireless Network Connection* icon (, , or) on the taskbar.
2. Select *View Available Wireless Networks*.
3. In the *Related Tasks* field, click *Change the order of preferred networks*.

The Wireless Network Connection Properties *dialog box will appear.*

4. In the *Preferred networks* field, select the network to be given the security change and then, click *Properties*.
5. Select *Open* in the *Network Authentication* pull-down menu and *WEP* in the *Data encryption* pull-down menu.

Some access points require that you select shared *for the* Network Authentication*. Refer to the manual of your access point.*

6. Clear the box of *The key is provided for me automatically*.
7. Type the same network key as the other device to be communicated with in the *Network key* and *Confirm network key* fields.

Available letters and digits are following;

ASCII format[*1]	5 or 13 characters
Hexadecimal format[*2]	10 or 26 digits

[*1] *0 to 9, a to z, and A to Z (The uppercase and lowercase letters are distinguished.)*
[*2] *0 to 9, a to f, and A to F (The uppercase and lowercase letters are not distinguished.)*

8. If necessary, change the key index in the *key index* fields.

- *The key index options of the computer are 1 through 4.*
- *Some access points and computers have the options 0 through 3. Refer to the table below for matching.*

Key index matching table

Access Point 1 /Computer 1	Access Point 2 /Computer 2	Your computer
1	0	1
2	1	2
3	2	3
4	3	4

(ex. When your access point type is "Access Point 2" and its key index is set to 0, set 1 to the key index of your computer.)

9. Click *OK* twice and close the *Wireless Network Connection Properties* dialog box.

WPA-PSK with TKIP or AES

1. Follow the steps 1 to 4 in the *WEP* section above.
2. Select *WPA-PSK* in the *Network Authentication* pull-down menu and *TKIP* or *AES* in the *Data encryption* pull-down menu.
3. Type the same network key as the other device to be communicated with in the *Network key* and *Confirm network key* fields.

Available letters and digits are following;

ASCII format[*1]	8 through 63 characters
Hexadecimal format[*2]	64 digits

[*1] *0 to 9, a to z, and A to Z (The uppercase and lowercase letters are distinguished.)*
[*2] *0 to 9, a to f, and A to F (The uppercase and lowercase letters are not distinguished.)*

4. Click *OK* twice and close the *Wireless Network Connection Properties* dialog box.

Built-in Modem

You can use the built-in modem for data transfer and fax communication.

- *The built-in modem on the computer is designed only for regular analog telephone lines. The modem may be damaged when connected to a digital ISDN terminal or a digital PBX.*
- *Use TA (terminal adapter) to connect the built-in modem to a digital telephone line.*
- *If an unusual device is attached to the line you are connecting to, the modem may not function properly. Remove the device or contact the dealer of the device.*
- *Before connecting to a PBX, consult the PBX maintenance staff or its service company. If the electric characteristics of your PBX are different from those of a regular analog line, the modem will not function properly. If you connect the modem to a digital PBX, both the modem and the PBX may be damaged.*

- *Within the communication software you are using, set the COM port of the built-in modem to* COM 3 *and modem name to* Agere System HDA Modem *if required.*
- *Before commencing with fax communication, it is recommended that you exit other application programs.*

Connecting the Modem to Telephone Line

To reduce the risk of fire, use only No. 26 AWG or larger UL Listed or CSA Certified Telecommunication Line Cord.

1. Turn off the computer.

2. Connect a modem cable to the modem jack and the telephone line.

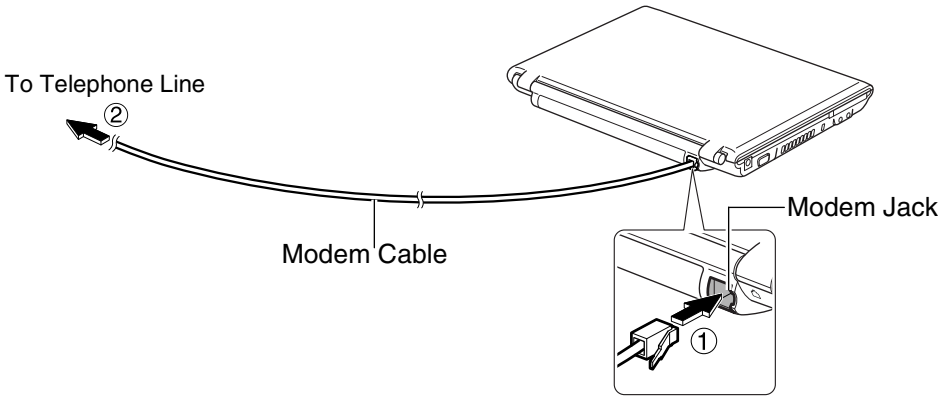

Be sure not to insert a modem cable into the LAN jack on the rear side of the computer. It may damage the LAN jack and the modem cable.

Connect the modem to the telephone line directly. Do not use a distributor or allotter.

3. Turn on the computer.

Configuring the Modem

You may have already configured your modem during the Windows setup process. Otherwise, make the necessary adjustments as shown below.

Modem Configuration

When you use the modem first time, you must type your location's information.

1. Click *start – Control Panel – Printers and Other Hardware*; then, *Phone and Modem Options*. If the Classic view is selected, double-click the *Phone and Modem Options* icon.
2. In the *Location Information* dialog box, select your country, type your area code, etc. and select your dial type; then, click *OK*.

After the configuration, click or double-click the *Phone and Modem Options (*icon*)* to open the *Phone and Modem Options* dialog box and double-click the location name in the *Locations* field of the *Dialing Rules* tab for the information you set above. Clicking *Edit…* or *New…*allows you to make a new location or change the settings.

Internet Connection

Windows XP has a special Internet connection wizard to help you to connect to the Internet with ease.

- *If you plan to connect into the Internet and dial an Internet Service Provider (ISP) through the modem, have your account information and dial-up number ready before you begin the wizard.*
- *Once you set your connection, you can see or edit the connection status by double-clicking the icon appearing on the* Dial-up *field of the* Network Connections *dialog box.*

1. Click *start – Control Panel – Network and Internet Connections – Network Connections*. If the Classic view is selected, double-click the *Network Connections* icon.
2. In the *Network Connections* dialog box, click *Create a new connection* of the *Network Tasks* section. The *New Connection Wizard* dialog box will appear.
3. Follow the instructions on the screen.

Removing the Modem Cable

Before pulling the modem cable out of the modem jack, be sure to release the connector of the modem cable by pressing the connector tab. Excessive force may damage the tab.

1. Turn off the computer.

2. Press and hold the connector tab of the modem cable and then, pull out the cable.

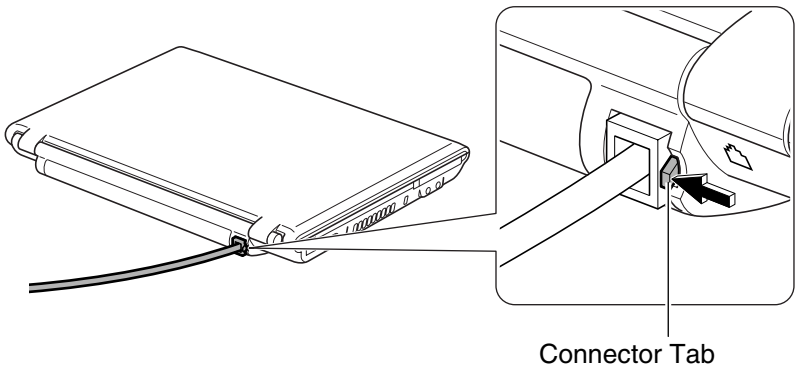

Network Setup Utility

With the Network Setup Utility, you can define specific network settings based on your network environments such as work, home, etc. You can also allow for the computer automatically to switch to the appropriate network.

- *Not every setting item can be stored.*
- *The Network Setup Utility may not be compliant with all network environments.*
- *The* Help *of the Network Setup Utility will give you more information.*

Running the Network Setup Utility

For the first use;

1. Click *start – All Programs – Network Setup Utility – Network Setup Utility*.

The Network Setup Utility icon ( ) will appear on the taskbar.

2. Click the *Network Setup Utility* icon ( ) on the taskbar.
3. Read the message and then, click *Yes* or *No*.

For the second use and later;

- When *Yes* is chosen in the step 3 above, the *Network Setup Utility* will automatically run on Windows start-up.
- When *No* is chosen in the step 3 above, click *start – All Programs - Network Setup Utility –Network Setup Utility.*

Loading the Network Settings

To set your specific network setting, confirm that the computer is connected into the network and has the proper settings for your current environment and follow the instructions below.

1. Confirm the current network setting is to be loaded.
2. Run the *Network Setup Utility* to display the *Network Setup Utility* window.
3. Click the ( ) icon.
4. Click *OK* in the confirmation window.

5. In the *Register an icon and network name* dialog box, select the *SHARP icon* or *Windows icon*, then, click the *Select icon* button.
6. Select an icon and click *OK*.
7. Type a network name, then, click *OK*. The selected icon appears on the main screen of the *Network Setup Utility* window.

It takes a moment to load and register the network settings.

Using or Switching to a Network

Using or Switching to a Loaded Network

To use or switch the loaded network, confirm the computer is ready to connect into the network and follow these steps.

1. Run the *Network Setup Utility* to display the *Network Setup Utility* window.
2. Select the appropriate network icon in the *Network Setup Utility* window.
3. Click *OK*.

- *Make sure the computer is connected to the proper environment.*
- *If your hardware or software configuration has been changed, you may not be able to switch to the network properly. In this case, you may need to reconfigure the network settings.*

Automatically Switching to an Available Network

The computer supports the auto-switching function, “Auto Pilot,” automatically to detect one of the available networks registered and switch to it.

1. Run the *Network Setup Utility* to display the *Network Setup Utility* window.
2. Click the *Auto Pilot* icon ( ).
3. Read the message in the confirmation window and click *OK*.

- *It will take a moment to switch to the auto pilot mode.*
- *To exit from the auto pilot mode, click the icon ( ) again.*

CHAPTER 5

Setup Utility

This chapter describes how to run the Setup Utility to change settings on the computer.

Running the Setup Utility

With the Setup Utility, you can customize the system configuration information, such as time and date, or passwords. The information you have specified is saved in a special area called CMOS RAM, which the system reads every time you turn on the computer. The computer is shipped from the factory with the appropriate setting of the Setup Utility. Leave it as default in normal use.

Contents of Setup Utility

The Setup Utility consists of six menu pages, as follows:

- Main: Configures basic setting.
- Advanced: Configures device interface.
- Security: Sets Passwords.
- Boot: Sets where the system boots from.
- Battery: Conditions the battery pack.
- Exit: Exits the Setup Utility or retrieves the default values.

Entering and Exiting the Setup Utility

1. Turn on the computer.
2. When *Press F2 for System Utilities* appears, press **F2**.
3. Change to the desired settings. (Refer to the next section.)
4. Select *Exit* menu; then, press **Enter**.
5. Select one of the exit methods, and press **Enter**.
6. Confirm the message and press **Enter** again. The system restarts.

When the Setup Utility is opened, power management does not work. Do not close the display cover.

Changing the Settings of the Setup Utility

The touchpad and mouse are disabled in the Setup Utility. Use the keyboard.

To change the settings:

1. Use → or ← key to select the menu.
2. Use ↑ or ↓ key to select the item.

   Minus key or **Space** bar: Changes the value.
   In the item with ►mark, press **Enter** to open a sub menu. Press **Esc** to close the sub menu and return to the previous menu.
   For date and time, press **Enter** on the item to select the value to be changed; then, use the minus key or space bar to change the value.

3. Close the Setup Utility referring to the steps in the *Entering and Exiting Setup Utility* section.

Main Menu

System Time defines the system time, using the format *hour:minute:second* (24-hour format). Use the **Enter** key to move the cursor, and the minus key or space bar to change numerals.

System Date defines the system date, using the format *month/day/year.* Use the **Enter** key to move the cursor, and the minus key or space bar to change numerals.

Hard Disk Drive Type defines the hard disk type of the computer. To display more information, press **Enter**. Normally use as default.

Optical Disk Drive Type defines the optical drive type of the computer. To display more information, press **Enter**. Normally use as default.

Internal NumLock defines whether the numlock keys of the built-in keyboard are always enabled or disabled.

Quiet Boot defines whether SHARP logo appears on the screen while booting.

CPU Information shows the information of the CPU.

System Memory shows the volume of the conventional memory.

Extended Memory shows the volume of the extended memory more than 1MB.

BIOS Version shows the BIOS version of the system.

EC/KBC Version shows the EC/keyboard controller version of the system.

Advanced Menu

Resolution Expansion defines whether the screen is expanded when it is in a low resolution. (The setting is not used on Windows.)

Plug&Play O/S normally has to be set to default as "Yes."

Max ACPI C-State determines the amount of power management while the system is idling. Normally set to default as "C4 State."

Security Menu

Set Supervisor Password defines the supervisor password (up to eight letters, figures, or the combinations). See the next section about the supervisor password.

Set User Password defines the user password (up to eight letters, figures, or the combinations). You can set the user password only when the supervisor password has been set.

If you lose your password, you will be unable to access the computer or change the configuration. Make sure to select a password you will never forget, or write it down and protect it in a secure place. Otherwise, you will have to contact your dealer for assistance.

Password On Boot defines whether the system requires the password entry to boot up.

Hard Disk Boot Sector defines whether the boot sector of the hard disk is write-protected. When formatting the hard disk or reinstalling software, set it to *Normal*.

Passwords

Setting a password will protect the computer against unauthorized access. Once a password is set, the system requires the password when entering to the Setup Utility. If the *Password on boot* is enabled, the system will require the created password when the computer is turned on.

- *If you enter a wrong password three times, the message "System Disabled" appears. Press the power button to shut down the computer, and after 10 seconds, press the power button to turn it on again.*
- *If the* Password On Boot *is disabled, the password entry will be needed to enter the Setup Utility.*

Your computer supports two different levels of password security: a supervisor password and a user password. A user password is available to be set with a supervisor password set. If you share the computer with others we recommend that you set both supervisor and user passwords, and let others know the user password only.

Setting the Password

If not necessary, do not set the supervisor password or user password. If you forget the password, you cannot boot the computer.

The user password can change the following items:

- *System Time*
- *System Date*
- *Resolution Expansion*
- *Set User Password*
- *Battery Calibration*
- *Exit Saving Changes*
- *Exit Discarding Changes*
- *Save Changes*

1. In the *Security* menu of the Setup Utility, select *Set Supervisor Password* or *Set User Password* and press **Enter**.
2. Type your password (up to eight letters, figures, or the combinations), and press **Enter**.
3. Type the same password again, and press **Enter**.
4. Press **Enter**.

5. Select *Exit* menu and confirm *Exit Saving Changes* is highlighted; then press **Enter**.
6. Confirm *Yes* is highlighted and press **Enter**. The system restarts.

- *To enable the supervisor password or the user password when booting up the computer, enable the* Password On Boot.
- *When entering the Setup Utility, the password will be required.*

Changing the Password

1. In the *Security* menu of the Setup Utility, select *Set Supervisor password* or *Set User password* and press **Enter**.
2. Type your current password, and press **Enter**.
3. Type your new password, and press **Enter**.
4. Type your new password again, and press **Enter** twice.
5. Select *Exit* menu and confirm *Exit Saving Changes* is highlighted; then press **Enter**.
6. Confirm *Yes* is highlighted and press **Enter**. The system restarts.

Deleting the Password

A deletion of the supervisor password will delete the user password.

1. In the *Security* menu of the Setup Utility, select *Set Supervisor password* or *Set User password* and press **Enter**.
2. Type your current password, and press **Enter**.
3. Without typing any characters, press **Enter**.
4. Without typing any characters, press **Enter** twice.
5. Select *Exit* menu and confirm *Exit Saving Changes* is highlighted; then press **Enter**.
6. Confirm *Yes* is highlighted and press **Enter**. The system restarts.

Boot Menu

Boot Sequence specifies where the system boots from. Press **Enter** to open the sub menu. The system boots from the drive at the top of the list. If the system cannot find the drive, it will boot from the second one; then, third one; then forth one. Use arrow keys to select the drive you want to move and then, use the space bar or minus key to move it up or down.

USB Boot enables or disables the boot from the USB floppy disk drive.

LAN Boot defines whether the system boots from other server via the LAN unit of the computer.

Battery Menu

Battery Calibration conditions the battery pack. (Refer to the *Conditioning the Battery Pack* on page 2-4.)

Exit Menu

Exit Saving Changes saves the settings you have changed and exits the Setup Utility.

Exit Discarding Changes exits the Setup Utility without saving the settings you have changed.

Load Setup Defaults returns the values of all items to the default. To exit, select one of the first two items.

Discard Changes returns the values of all items to the values you last saved. To exit, select one of the first two items.

Save Changes saves the settings you have changed.

Setup Utility

Appendixes

The appendixes contain additional information on the use and care of the computer.

Memory Module

You can upgrade the memory amount of the computer by installing an expansion memory module. See the specification on the separate specification sheet for the default and maximum memory size. For available memory modules, contact your local dealer or visit http://www.sharpsystems.com.

Installing the Memory Module

- *Do not handle the memory module in a location where static electricity is easily generated such as on the carpet.*
- *Before installing the memory module, carefully discharge static electricity from your body by touching an unpainted metal area.*
- *Avoid touching the integrated circuits on the memory module. Handle all components by their edges.*
- *Keep the memory module in the anti-static wrapping until you are ready to install it.*

1. Turn off the computer.
2. Disconnect the AC adapter and remove the peripheral devices.
3. Put the computer on a stable surface and remove the battery pack. (See Chapter 2 for removing the battery pack.)

- *Make sure to turn off the computer and remove the AC adapter and the battery pack. Otherwise you may get an electrical shock.*
- *After long use of the computer, the temperature inside the computer may have gone up. Leave it alone until it becomes cool before going on to the next step.*

4. Loosen the screw and remove the cover.

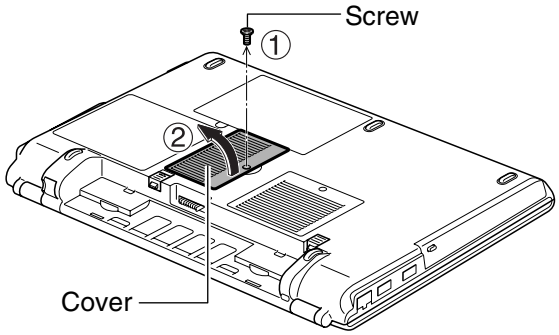

5. Turn over the sheet.

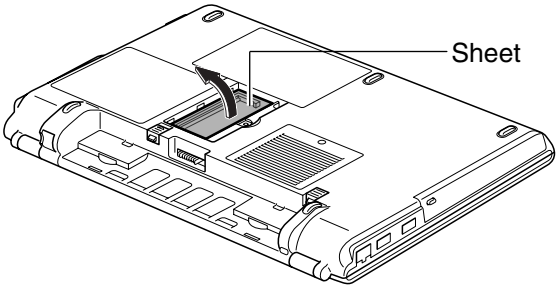

6. Align the notched part of a memory module to the projecting part of the memory socket and then, put the module into the socket until it is seated.

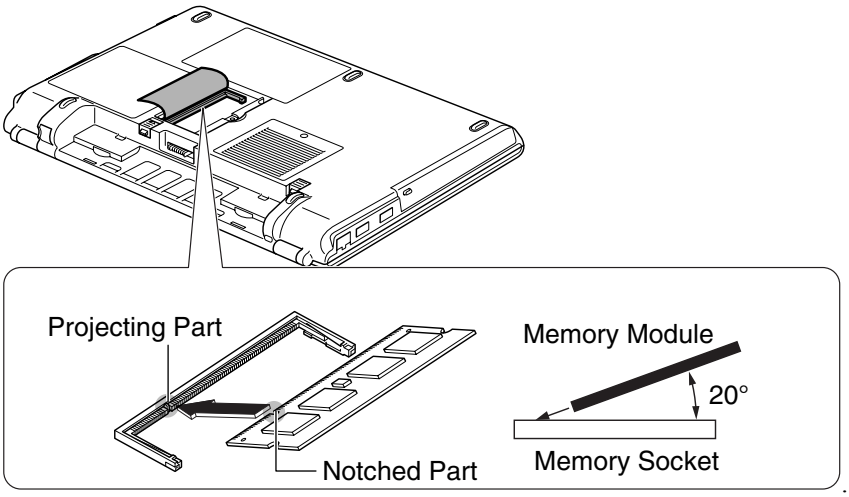

7. Gently press the module to place it into the socket, matching the notched parts of the module with the projecting parts of the socket.

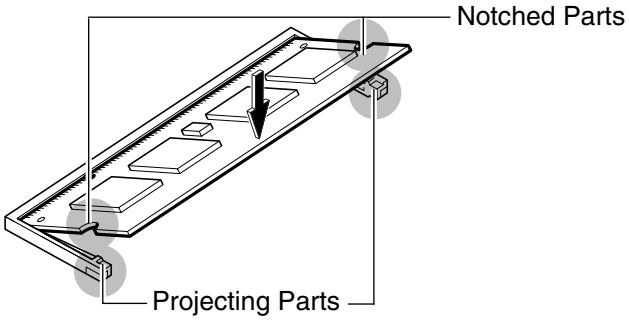

8. Match the tabs of the cover with the notched parts of the computer, and then, put down the cover so that it is placed in the original position.

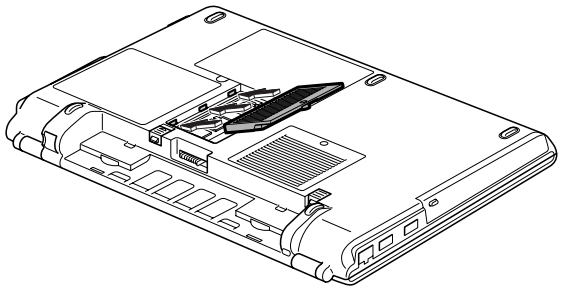

9. Tighten the screw.

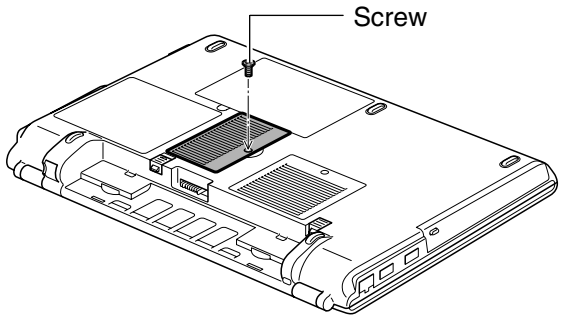

10. Reinstall the battery pack, turn over the computer and connect the AC adapter.

Finding the Memory Size

1. Turn on the computer. When the message *Press F2 for System Utilities* appears, press **F2** to open the Setup Utility.
2. Find the memory size shown in the *Extended Memory* field in the *Main* menu.

- *The available memory size will appear, minus the total amount of shared video memory size and other factors.*
- *If you find the memory size shown incorrectly, it is considered that the memory module has been installed improperly. Press the power button to turn off the computer and reinstall the memory module correctly.*

3. Press **Esc** key. The *Exit* menu will appear.
4. Confirm *Exit Saving Changes* is selected and then, press **Enter**.
5. Confirm *Yes* is selected and then, press **Enter**.

   The computer will restart.

You can find the memory size on Windows.
Click start – My Computer – View system information *of* System Tasks*.*
The memory size will appear, minus the amount of shared video memory size, at the bottom of the sentence in General *tab.*

Removing the Memory Module

1. Follow the steps 1 to 5 of the *Installing the Memory Module* section.
2. Slightly bend both latches outwards until the memory module is released.

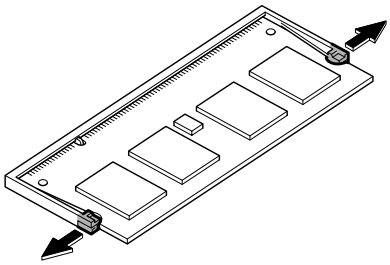

3. Remove the memory module and close the cover.

Maintenance and Care

This section provides you with information on how to maintain your computer in excellent working condition.

Using a Security Cable

You can connect a security cable to the security slot on the computer to prevent theft.

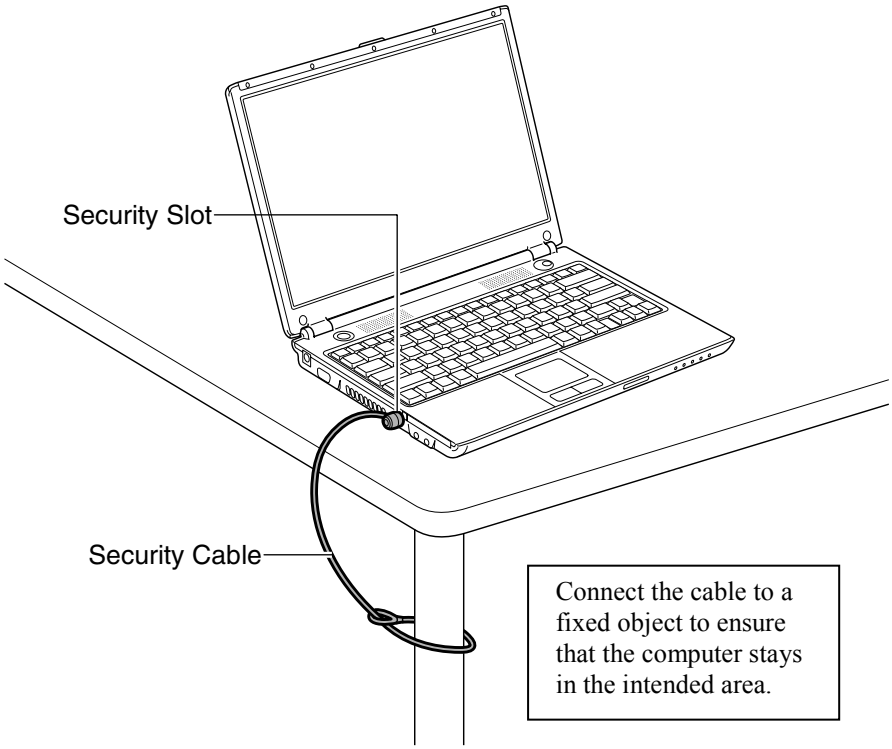

Cleaning the Computer

Cabinet

Apply a small amount of mild cleaning solution to a dry, lint-free cloth and wipe the cabinet with the cloth.

- *Never clean the computer while it is powered on.*
- *Do not use alcohol, benzene, thinner, or other strong chemical agents that may damage the cabinet.*

Screen

The surface of the screen may become smeared and accumulate dust during use. Avoid touching the screen with your fingers when using the system. Gently wipe the surface of the screen with a soft cloth that has been dipped in a mild detergent solution and squeezed dry.

Touchpad

Wipe the touchpad with a soft, dry cloth.

Ventilation Openings

Dust on the ventilation openings may cause overheating of the computer. Wipe the ventilation openings with a soft, dry cloth.

Traveling with Your Computer

The computer is designed for portability. For safety and convenience when traveling, please follow these guidelines.

- Before traveling, back up your data on external media.
- Do not travel with a protruding PC card inserted in the PC card slot of the computer.
- Do not carry the computer with the power on. This may result in loss of data and/or damage to the hard disk drive.
- Make sure the display cover is completely closed before traveling. Otherwise the cover may be opened unexpectedly, and the display and/or the keyboard may be damaged.
- If you carry the computer in a bag, avoid unnecessary pressure to the computer by the other items in the bag.
- Disconnect the AC adapter and any other cables and any peripherals from the computer.
- Fully charge the battery pack and remember to bring the AC adapter and the AC power cord with the computer.
- Avoid sudden shocks or extreme vibration.

Virus Protection

Computer viruses are referred to as a kind of malignant program intentionally engineered. When the computer is infected, several damages would be generated; data in the hard disk may be destructed; the computer may be provided external operation by unauthorized users; you may inadvertently attach infected files to your e-mails resulting in spreading the viruses, for example.

To avert virus infection,

- Use the latest virus protection/cleaner software,
- Apply the latest virus definition file for prevention of new virus attack,
- Before opening incoming files such as attached files or downloaded files, detect the virus infecting them,
- Do not open e-mails originating from an unknown place,
- Enable the security functions of your application to be used (i.e. disabling macros when handling Word or Excel files,) and
- Regularly update Windows or the applications/software on your computer.

Be sure to back up your important data regularly. If the data has been damaged by a virus, you may not be able to recover it.

When virus infections occur

Eliminate the virus by using the latest anti-virus software or virus cleaner software. When it fails, repair all the hard disks. (For repairing the hard disks, refer to the *Re-installation Instructions* section on page A-13.)

Updating Windows

Enabling Automatic Updates

If the *Automatic Updates* is turned off on the computer, follow these steps.

- *You can check the current Automatic Updates status by following these steps. If it is turned off, turn it on.*
  1. *Click* start – Control Panel – Security Center.
  2. *See the* Automatic Updates *field in the* Security Center *window. When the* Automatic Updates *is* ON*, the function is enabled.*
- *When the* Automatic Updates *is turned on, the computer will*

automatically detect the important programs to be updated and install them if any.

1. Click *start – Control Panel – Security Center*.
2. In the *Security Center* window, click the *Turn on Automatic Updates* button.
3. Close the window.

Updating Windows

You can update Windows by clicking the *Windows Update* icon on the taskbar or accessing to the Microsoft site.
For more information, visit the Windows *Help and Support Center*.

Protecting Your Computer against Viruses

The *Norton AntiVirus* software is preinstalled on the computer for detecting and eliminating viruses. Since the software downloads the latest information or data through the Internet, the computer needs to be connected to the Internet. Some of the software features are below:

- Regularly updates itself to maintain the latest program and virus definition file against new virus threats. (LiveUpdate)
- Automatically scans all incoming messages and attachments so that viruses can be identified and blocked. Also detects viruses intruded into the computer. (Auto-Protect)
- Manually detects infected programs or files. (Virus Scan)

  Refer to *Help* of the *Norton AntiVirus* for more information.

- *By default, the Norton AntiVirus software :*
  - *Enables the* Auto Protect *function.*
  - *Scans the computer for virus weekly.*
- *Refer to the* Help and Support *of the Norton AntiVirus software for details.*

Enabling Norton Antivirus Software

To use the preinstalled Norton Antivirus software for the first time, you must complete the *Norton Antivirus* wizard to enable it and update the definition file.

1. Connect the computer to the Internet.
2. Click *start – All Programs – Norton AntiVirus – Norton Antivirus 2005*.

3. Follow the on-screen instructions to complete the *Norton Antivirus* wizard and the *LiveUpdate*.

Running LiveUpdate Automatically

The *Automatic LiveUpdate* function automatically updates the definition file.

Be sure to complete the Norton AntiVirus wizard before going on these steps.

1. Click *start – All Programs – Norton AntiVirus – Norton AntiVirus 2005*.
2. Click *Automatic LiveUpdate* in the *Subscription Service* field.
3. Click the *Turn On* button and close the *Norton AntiVirus* window.

Norton AntiVirus Update Service

Norton AntiVirus software scans for virus by means of a virus definition file allowing the software to identify and block a particular virus. To protect the computer against new viruses, the virus definitions and application need to be kept current. The software automatically checks the web and updates the definition file when needed. Free update service will be provided within ninety days after the software is installed. After the free service is over, one-year paid update service can be available. Refer to *http://www.symantec.com* for the application.

Scanning Viruses

By default settings, the Norton AntiVirus software automatically scans the computer once a week. To manually detect viruses infecting the computer, follow the instructions below.

Be sure to complete the Norton AntiVirus wizard before going on these steps.

1. Click *start – All Programs – Norton AntiVirus – Norton AntiVirus 2005*.
2. Click *Scan for Viruses* in the *Norton AntiVirus* menu.
3. Click an option you want to perform and then, follow the on-screen instructions.

Data Execution Prevention

The computer is mounted with the CPU supporting Data Execution Prevention (DEP) technology (or a memory protection feature) built into the Windows operating system. With the DEP technology, the operating system marks some memory regions as non-executable and prevents execution of malicious program code there, which will result in protecting the computer from virus infection.

- *Only the members of the Computer administrators group can change the settings of DEP or the Security Center.*
- *With the computer connected to LAN, the settings may not be changed. Consult your network administrator.*

Changing DEP Settings

By default, the DEP technology is enabled only for essential Windows programs and services. To turn on the DEP for all programs and services;

1. Click *start – My Computer*.
2. Click *View system information* in the *System Tasks* field.
3. Click the *Advanced* tab.
4. In the *Performance* field, click the *Settings* button.
5. Click the *Data Execution Prevention* tab and select *Turn on DEP for all programs and services except those I select*.
6. Click *OK*.
7. Click *OK* in the confirmation window.
8. Click *OK* to close the dialog box.
9. Close the *My Computer* window.
10. Restart the computer.

Checking Safety of Programs

As the DEP always functions on the computer against the security threats, some programs may be blocked and cannot execute. If you have the message “To help protect your computer, Windows has closed this program,” close the message window and check out the safety of the program and computer by following theses steps.

1. Open the *Security Center* and confirm all of the *Firewall*, *Automatic Updates* and *Virus Protection* are *ON*.

- *Be sure to enable all of these three functions.*
- *For details on the* Security Center*, refer to the* Notice of Computer Security *on page xiv.*

2. Scan the system for viruses.

- *If some viruses are detected, eliminate them according to the instructions of the virus protection/cleaner software.*
- *If no viruses are detected and the three functions are enabled, consult the program publisher for an updated version.*

Disabling DEP for Specific Programs

After ensuring the safety of the program, disable the DEP function to enable the program execution.

To protect the computer, try to update the program and enable the DEP function.

1. Follow the steps 1 to 5 of the *Changing DEP Settings* section on the previous page.
2. Check the box of the program in the list to be run and then, click *OK*.

If the program is not on the list, click Add… *and select the program to be run.*

3. Click *OK*.

If the confirmation window appears, click OK.

4. Click *OK*.
5. Restart the computer if prompted in the step 3.

Data Backup and Restore

Your important data such as e-mails or files is stored on the hard disk of the computer. Backing up the data in another place is one of the ways that can protect your data against any disaster, data corruption or data erase, for example.

Backing Up Data and Settings

Backing Up Data

You can back up your data on the D drive, external hard disk, or CD-R/RW disks.

The D drive is not perfectly safe place for backup. If the hard disk is damaged, you cannot access the backup data.

The Auto-Grabber *function of Drag'n Drop CD+DVD4 helps you back up your data onto your media. Refer to* Auto-Grabber Help *for more information.*

Backing Up Settings

The *File and Settings Transfer Wizard* can help you to back up several settings at one time. To open the wizard, follow the instructions below.

You cannot back up the details on the network settings such as an IP address and subnet mask by using the File and Settings Transfer Wizard*. Note down the details on the settings and keep it in a safe place.*

1. Connect the backup device or media to the computer.
2. Click *start – All Programs – Accessories – System Tools – Files and Settings Transfer Wizard*.
3. Follow the on-screen instructions.

Restoring Data and Settings

You can also use the *File and Settings Transfer Wizard* to restore your data or settings from the backup media to the hard disk.

Confirm that the backup data to be restored is the one you want before overwriting the existing file.

Re-installation Instructions

Refer to this section to re-install the system of the computer.

- *The reinstallation process will overwrite all information in the C and D drives of the hard disk and restore the hard disk drive to its factory configuration.*
- *The necessary reinstallation data is on the hard disk of the computer. Never modify or delete this data. Without the correct data, you cannot restore the computer to its factory configuration.*
- *Do not change the setting of the hard disk partition. The change may result in deleting the reinstallation data. Without the data, you cannot restore the computer.*
- *If you have installed commercial data recovery software on the computer, never perform the reinstall process until you uninstall the recovery software, which may rewrite the MBR* of the hard disk. If the MBR is rewritten, you may not be able to reinstall the system.*

*(*Master Boot Record: a sector on the beginning of a hard disk drive that contains a sequence of commands necessary for booting an operating system)*

To recover your hard disk, you will use the PowerQuest EasyRestore software which comes pre-installed on your computer. Before starting re-installation, read the following End User License Agreement first.

PowerQuest® EasyRestore™ End User License Agreement

IMPORTANT: Read this before using your copy of PowerQuest software.

This document is a legal agreement between you, the "end user," and PowerQuest Corporation. Use of the software indicates your acceptance of these terms. As used in this License Agreement, the term "Software" means the EasyRestore software included on the CD provided with this License Agreement.

1. PROPRIETARY RIGHTS. The Software is a proprietary product of PowerQuest Corporation ("PowerQuest") or its licensors and is protected under U.S. copyright laws and international treaty provisions. Ownership of the Software and all copies, modifications, and merged portions thereof shall at all times remain with PowerQuest or its licensors.

2. GRANT OF LICENSE. The Software is being licensed to you, which means you have the right to use the Software only in accordance with this License Agreement. The Software contains pre-installed software for disaster recovery purposes. The Software is only authorized for distribution together with a specific computer. This License authorizes you to use the Software for disaster recovery purposes only, to restore the hard disk image contained on the CD to the computer with which the CD and Software were originally shipped.

3. NONPERMITTED USES. Without the express permission of PowerQuest, you may not (a) use, copy, modify, alter, or transfer, electronically or otherwise, the Software or documentation except as expressly permitted in this License Agreement, or (b) translate, reverse program, disassemble, decompile, or otherwise reverse engineer the Software.
4. TECHNICAL SUPPORT. PowerQuest is NOT responsible to provide technical support. Any and all technical support questions, regarding the Software, should be referred to the place of purchase.

5. U.S. GOVERNMENT RESTRICTED RIGHTS. If you are acquiring the Software on behalf of any unit or agency of the United States Government, the following provision applies: It is acknowledged that the Software and the documentation were developed at private expense and that no part is in the public domain and that the Software and documentation are provided with RESTRICTED RIGHTS. Use, duplication, or disclosure by the Government is subject to restrictions as set forth in subparagraph (c)(1)(ii) of the Rights in Technical Data and Computer Software clause at DFARS 252.227-7013or subparagraphs (c)(1) and (2) of the Commercial Computer Software-Restricted Rights at 48 CFR 52.227-19, as applicable. Contractor/manufacturer is PowerQuest Corporation/P.O. Box 1911/Orem, UT 84059.

6. NO WARRANTY. The Software is being provided to you AS IS. PowerQuest does not warrant the Software to end users. If the Software fails to perform substantially in accordance with the documentation provided to your hardware supplier, PowerQuest will repair or replace the copy of the Software provided to your hardware supplier and will authorize your hardware supplier to provide such repaired or replaced Software to you without charge.

7. LIMITATION OF LIABILITY. NEITHER POWERQUEST NOR ITS SUPPLIERS SHALL IN ANY EVENT BE LIABLE FOR ANY DAMAGES WHATSOEVER ARISING OUT OF OR RELATED TO THE USE OF OR INABILITY TO USE THE SOFTWARE, INCLUDING BUT NOT LIMITED TO DIRECT, INDIRECT, SPECIAL, INCIDENTAL, OR CONSEQUENTIAL DAMAGES, AND DAMAGES FOR LOSS OF BUSINESS PROFITS, BUSINESS INTERRUPTION, LOSS OF BUSINESS INFORMATION, OR OTHER PECUNIARY LOSS, EVEN IF POWERQUEST CORPORATION HAS BEEN ADVISED OF THE POSSIBILITY OF SUCH DAMAGES, WHETHER SUCH LIABILITY IS BASED ON CONTRACT, TORT, WARRANTY, OR ANY OTHER LEGAL OR EQUITABLE GROUNDS. BECAUSE SOME STATES DO NOT ALLOW THE EXCLUSION OR LIMITATION OF LIABILITY FOR CONSEQUENTIAL OR INCIDENTAL DAMAGES, THE ABOVE LIMITATION MAY NOT APPLY TO YOU.

8. NO WAIVER. Any failure by either party to this agreement to enforce a specific part of the agreement in a specific situation is not a waiver of rights under the agreement. The party may still enforce the rest of the agreement in that situation and may still enforce some or all of the agreement in other situations.

9. This License Agreement constitutes the entire agreement between you and PowerQuest pertaining to its subject matter. This License Agreement is governed by the laws of the State of Utah. Any litigation arising from this license will be pursued only in the state or federal courts located in the State of Utah.

Copyright 1994-2005, PowerQuest Corporation. All rights reserved. U.S. Patents 5,675,769; 5,706,472; and 5,930,831; other patents pending in the U.S.A. and elsewhere. PowerQuest is a registered trademark and EasyRestore is a trademark of PowerQuest Corporation.

Recovery Options

You can format the hard disk and re-install the preinstalled software and set the status of the computer to the same configuration as you used for the first time. There are two options to recover the hard disk drive(s) of the computer: via hard disk and via recovery CD. The former saves your time, while the latter secures the re-installation data from potential loss or corruption. The later sections describe the specific steps for each option.

Before you recover via recovery CDs, you need to write the preinstalled recovery data on the computer onto blank CD-R disks. (Refer to the related section later in this chapter.) You are allowed to create only one copy of the recovery data.

Preparation for Reinstallation

The following items are necessary for reinstallation.

Via Hard Disk

- Operation Manual

Via Recovery CD

When you recover first time:

- Operation Manual
- Four blank 650MB or 700MB CD-R disks for creating recovery CDs

When you recover after preparing the recovery CDs:

- Operation Manual
- The created recovery CDs

Backing Up Data

Before you format the hard disk, back up your data. For details on how to back up your data, refer to *Data Backup and Restore* section on page A-12.

Selecting Way to Recover Your System

The computer has partitioned the hard disk into two drives (C: and D:) when it was shipped from the factory. You can select one of the following options to recover your system.

- *Recovers C: drive only. (Recommended)*
  This process will format the C drive only and recover the C drive to the same status as shipped from the factory. Nothing will be performed to the D drive. The volume of the drives will not be changed and will keep the current one.
- *Recovers both C: and D: drive.*
  This process will format both the C and D drives, and contents of the hard disk will be restored to its original state in the C and D drives. The volume of the drives will be back to the same as you used for the first time. This process will delete any new data stored in the hard disk.
- *Formats hard disk and creates new partition.*
  This process will format the whole hard disk drive and create new drive partitions. You can select the specified volume of the C and D drives. The contents of the hard disk will be restored to its original state. This process will delete any new data stored in the hard disk.

While you are recovering with the created recovery CDs, "Recover both C: and D: drive" and "Formats hard disk and creates new partition" will eliminate the reinstallation data stored in the hard disk. If it is eliminated, you cannot recover your system via hard disk.

Formatting Drives and Re-installing Windows

The formatting and re-installing process will restore the hard disk drive to its factory configuration. To ensure the computer's safety, enable the virus protection/cleaner software and update the virus definition file to the latest one. Also, the Windows Update should be run for virus prevention. (Refer to the Virus Protection *section on page A-7.)*

Via Hard Disk

With this way, recovery will come from data already installed on the computer rather than from external media such as CDs.

Note that if there is any possibility of the data being lost or corrupted, you may not format the hard disk drive(s) and reinstall Windows.

1. Make sure the computer is turned off.
2. If any peripheral devices are connected to the computer, disconnect them.
3. Connect the AC adapter.

Be sure to connect the AC adapter. If the battery power becomes significantly low, the reinstallation process will be canceled.

4. Turn on the computer. When the message *Press F2 for System Utilities* appears on the bottom left of the screen, press **F2**. Then, the Setup Utility will open.
5. In the *Exit* menu, select *Load Setup Defaults*; then, press **Enter** twice.
6. In the *Exit* menu, confirm *Exit Saving Changes* is highlighted and press **Enter** twice.
7. The system will restart. When the message *Press F10 to Recover* appears on the upper left of the screen, press **F10**.

The message stays there for two seconds.

8. Read the message on the screen, and select the way to recover your system; then, press **Enter**. If you selected *Formats hard disk and creates new partition*, go to the next step. Otherwise, go to the step 10.

9. Select the volume of C drive and press **Enter**.
10. Read the message and select *Continue*; then, press **Enter**. The formatting and re-installation will start.

> *Although the pointer may be shown on the screen, never touch the keyboard or the mouse during recovery except when the message prompts you to. If you touch them, the reinstallation process may be canceled.*

11. When the hard disk has been recovered successfully, the system will restart automatically.
12. Set up Windows XP by following the on-screen instructions. After you complete the Windows setup, be sure to set date and time.

Via Recovery CD

Recovery CDs do not come with the computer. First, you need to copy the recovery data onto CD-R disks and then, recover the system with them.

> - *You will only have the ability to create one set of recovery CDs.*
> - *Even if you cancel the CD burning process, you can create the recovery CDs by starting at the first step.*
> - *You can recover your system via hard disk even after succeeding in creating the recovery CDs.*

Creating Recovery CD

To create the recovery CDs, you will use the *Bootable CD Creator* software. Read the following End User License Agreement first.

Enterprise Corporation International Software License Agreement

This End-User License Agreement ("the Agreement") is a legal agreement between you, the "end user," and Enterprise Corporation International ("ECI") for the ECI product, which includes a computer program (Bootable CD Creator), data, and manuals ("SOFTWARE PRODUCT"). Ownership of the SOFTWARE PRODUCT shall at all times remain with ECI. The SOFTWARE PRODUCT and accompanying documentation are licensed to you, which means you have the non-transferable and non-proprietary right to use the SOFTWARE PRODUCT in accordance with this Agreement. The SOFTWARE PRODUCT and any accompanying documentation are proprietary products of ECI or its licensors and are protected by United States copyright laws and international copyright treaties. Use of the enclosed software indicates your acceptance of these terms.

Intended Purpose:
The SOFTWARE PRODUCT is installed on and shipped with a computer manufactured by Sharp. You may use the SOFTWARE PRODUCT only for making a Bootable CD from the recovery image file that is pre-installed on the hard disk. You may use the SOFTWARE PRODUCT only on the computer with which this SOFTWARE PRODUCT is provided.

You may not:

1. Copy the SOFTWARE PRODUCT, in whole or in part, to another media except for installation.
2. Share the license for the SOFTWARE PRODUCT or use it concurrently on different computers.
3. Alter, transfer or sell (including e-sales through the Internet) the SOFTWARE PRODUCT and/or its copy to a third party, in whole or in part.
4. Delete or change the notice of copyright contained in the SOFTWARE PRODUCT.
5. Reverse engineer, disassemble, or decompile the SOFTWARE PRODUCT.
6. Create source code for the SOFTWARE PRODUCT from the object code.
7. Use any portion of the SOFTWARE PRODUCT within any other program.
8. Install or run the SOFTWARE PRODUCT over the Internet for use by multiple users.

Term: This Agreement is effective from your date of purchase or the date you opened the package and shall remain in force until terminated. Upon termination of this Agreement, you must destroy all copies of the SOFTWARE PRODUCT and all accompanying documents. ECI may terminate this Agreement if you fail to comply with its terms and conditions.

Limited Warranty: ECI warrants that the SOFTWARE PRODUCT will perform substantially in accordance with the accompanying documentation. The warranties set out in this agreement are in lieu of and exclude all other warranties not expressly set forth herein, whether express or implied, including but not

limited to any warranties of merchantability, fitness for a particular purpose, or warranties arising from usage of trade or course of dealing.

Limitation of Liability: In no event shall ECI or Sharp be liable for any special, incidental, indirect, or consequential damages, or for damages for loss of business profits, business interruption, loss of business information, or other pecuniary loss, even if ECI or Sharp has been advised of the possibility of such damages.

Before creating the recovery CDs, follow the instructions below:

- *Prepare four blank 650MB or 700MB CD-R disks.*
- *Connect the AC adapter. If the battery is discharged, the operation will stop and fail.*
- *Set the APM button mode to* Max Power *and set the CPU performance level to 100%. (See the* Using the Advanced Power Management Button *section on page 2-9.)*
- *Disable system standby and system hibernate. (See* Power Saving *section on page 2-7.)*
- *Close all of the unnecessary or the automatic start-up applications.*
- *Disable the screen saver. (See the* Wallpaper and Screen Saver *section on page 1-20.)*

Disabling Auto Protect of Norton AntiVirus

Before creating the recovery CDs, disable the *Auto Protect* function of the Norton AntiVirus.

1. Right-click the *Norton Antivirus* icon ( ) on the taskbar.
2. Click *Norton AntiVirus Options.*
3. Clear the boxes of *Enable Auto-Protect* and *Start Auto-Protect when Windows starts up* in the *How to stay protected* field.
4. Click *OK*.
5. Select the duration for the *Auto Protect* to be disabled.

It is recommended that you select Until system restart *when you create the recovery CDs.*

6. Click *OK*.
7. If a message appears, read it and click *OK*.

The icon ( ) will change to ( ).

Creating Recovery CDs

1. Connect the AC adapter to the computer.

Be sure to connect the AC adapter. If the battery is completely discharged, the burning CD process will be stopped.

2. Insert a blank CD-R into the optical drive.

If a dialog box or window appears, close it.

3. Click *start – All Programs – Create Product Recovery CD*.
4. In the *Bootable CD Creator SE1.1* window, select the appropriate speed from the *Speed* pull-down menu, then, click the *Create Recovery Disc* button.
5. Read the message on the screen and then, click *Yes*, then, *OK*. The burning process will start.

Never touch the keyboard, mouse or touchpad during the burning process except when the message prompts you to do so. If you touch them, the burning process may be stopped.

6. Replace the CD-R by following the instructions on the screen. Label each CD-R in the order of burning so that you will set them in correct order when recovering.

If a window or dialog box opens, close it.

7. When you see the message *Disc creation complete* on the screen, click *OK*, then, *Close*.
8. Click *Yes* and remove the CD-R from the optical drive.

- *Store the burned disks in a secure place.*
- *Keep your disks away from direct sunlight, heat and excessive moisture.*

9. Close the optical drive.
10. Restart the computer.

Enabling Auto Protect of Norton AntiVirus

If the Norton Antivirus icon on the taskbar is disabled, appearing as ( ), follow these steps. If it is ( ), skip the steps.

1. Right-click the *Norton Antivirus* icon ( ) on the taskbar.
2. Click *Norton AntiVirus Options*.
3. Check the boxes of *Enable Auto-Protect* and *Start Auto-Protect when Windows starts up* in the *How to stay protected* field.
4. Click *OK*.
5. If a message appears, read it and click *OK*.

The icon ( ) will change to ( ).

Recovering with Recovery CDs

When you format the entire hard disk drive (both C and D drives), the reinstallation data stored in it will be eliminated. Therefore you will not be able to recover your system via hard disk.

1. Make sure the computer is turned off.
2. If any peripheral devices are connected to the computer, disconnect them.
3. Connect the AC adapters to the computer and then, turn it on.

Be sure to connect the AC adapter. If the battery is completely discharged, the installation process will be canceled.

4. When the message *Press F2 for System Utilities* appears, press **F2**. The Setup Utility will open.

5. Insert the Recovery CD disk 1 into the optical drive.
6. In the *Exit* menu, select *Load Setup Defaults*; then, press **Enter** twice.
7. In the *Boot* menu, confirm the *Boot Sequence* is highlighted and then, press **Enter**.
8. In the *Boot Sequence*, select the *Optical Disk Drive* and press the space bar to place the *Optical Disk Drive* in the top of the list; then, press **Esc**.
9. In the *Exit* menu, confirm *Exit Saving Changes* is highlighted and press **Enter** twice.
10. Read the message on the screen, and select the way to recover your system; then, press **Enter**. If you select *Formats hard disk and creates new partition*, go to the next step. Otherwise, go to the step 12.

> *When you select* Recovers both C: and D: drive *or* Formats hard disk and creates new partition*, the recovery process will delete the reinstallation data stored in the hard disk. Therefore you will not be able to recover your system from the hard disk.*

11. Select the volume of C drive and press **Enter**.
12. Read the message and select *Continue*; then, press **Enter**. Follow the on-screen instructions for replacing the recovery CD.

> *Although the pointer may be shown on the screen, never touch the keyboard, the mouse or the screen during recovery except when the message prompts you to. If you touch them, the reinstallation process may be canceled.*

13. After the recovery process is complete, the system will restart automatically. When the message *Press F2 for System Utilities* appears, press **F2**. The Setup Utility will open.
14. In the *Exit* menu, select *Load Setup Defaults*; then, press **Enter** twice.
15. In the *Exit* menu, confirm *Exit Saving Changes* is highlighted and press **Enter** twice. The system will restart.
16. Set up Windows, following the instructions on the screen.
17. Remove the recovery CD from the optical drive.
18. Make sure to set date and time.

Appendixes

Troubleshooting

This chapter describes how to troubleshoot computer problems.

Common Problems

Problems with your computer can be caused by something as minor as an unplugged power cord or as major as a damaged hard disk drive. The information in this troubleshooting section is designed to help you find and solve minor problems. If you still have a problem after trying all the suggested remedies in this chapter, contact your dealer or, for users in U.S, call: 1-800-BE-SHARP (237-4277).

The problems that you might encounter can be divided into two basic categories: hardware and software. Hardware problems can be further divided into being of an electrical or a mechanical nature. You will know you have a hardware problem if, for example, the screen is blank, or your computer cannot recognize the disk drives.

Software problems can occur at several levels. Both your operating system and your software application programs are capable of generating errors and error messages. If you encounter a software error, try to determine if the error message is from your operating system or from an application program, and refer to the appropriate manual for possible remedies.

You can also refer to the Windows help program to solve the problem. To access the program, click *start – Help and Support*. It also gives you troubleshooting tips and an index.

Successful troubleshooting is the result of careful observation, deductive reasoning, and an organized approach to solving the problem. If you encounter a problem, begin by performing a careful visual inspection. Check the exterior of your computer first. If no lights are displayed, check the battery charge or power outlet, the plug and power cord, and any power switches that may affect your computer. If your computer has been connected to any peripheral devices, look for loose or disconnected cables. You may also need to check the fuses and breakers in your electric box. A few common problems and suggested solutions are presented in the examples that follow.

Trouble when Starting

Why doesn't the power indicator or the battery indicator turn on?

- Make sure the AC adapter is correctly connected to the AC adapter jack of your computer.
- Make sure the AC power cable is correctly connected to a live wall outlet. To find it is live or not, connect another electric equipment to the wall outlet.
- Make sure the battery pack is correctly installed and charged.
- If the battery pack is discharged, connect the AC adapter.
- If all the steps above failed, follow the instructions on *Why doesn't the keyboard or the touchpad respond to your operation*? on page T-3.

Why do I get the message *Invalid system disk*?

- You may have inserted a non-bootable disk (either a defective disk or one without an installed operating system) in the optional external floppy disk drive unit. Eject the disk.

Why can't I boot from the floppy disk?

- Make sure that the optional external floppy disk drive unit is correctly connected to your computer.
- Check whether the floppy disk set to the optional external floppy disk drive unit contains a system disk.
- Check whether *USB Boot* in the *Boot* menu of the Setup Utility is enabled. (Refer to the *Boot Menu* section on page 5-7.)
- Check whether *Floppy Disk Drive* is at the top in the *Boot Sequence* in the *Boot* menu of the Setup Utility. (Refer to the *Boot Menu* section on page 5-7.)

Why do I get the message *Operating System not found*?

- The message may appear when the installation has failed. Recover the C and D drives using the created recovery CDs.

Why do I get the message *Press <F1> to resume, <F2> to setup*?

- The setting of the Setup Utility is deleted. Follow these steps:

1. Press **F2** key while the message *Press F1 to resume, <F2> to setup* is appearing.
2. In the *Exit* menu, select *Load Setup Defaults* and press the **Enter** key to retrieve the default values.
3. Confirm *Yes* is highlighted and then, press the **Enter** key.
4. Set the desired values in the Setup Utility or just leave the default values.
5. In the *Exit* menu, select *Exit Saving Changes* and then, press the **Enter** key.
6. Confirm *Yes* is highlighted and then, press the **Enter** key.
7. On Windows, click *start – Control Panel*.
8. Click *Date, Time, Language, and Regional Options*.
9. Click *Change the date and time*.
10. In the *Date and Time Properties* dialog box, set the current date and time; then, click *OK*.
11. Close the dialog box.
12. Make an appropriate setting on the Setup Utility, if necessary. If you want to keep the default settings, no setting performance is needed.

- If the operation above fails to work, contact your dealer or call: 1-800-BE-SHARP (237-4277) for users in U.S.

Trouble with the Keyboard or Touchpad

Why doesn't the keyboard or the touchpad respond to your operation?

- Try the following in this order:

1. Press **Ctrl+Alt+Delete** and select the *Applications* tab of the *Windows Task Manager* dialog box. Click the program name that hangs up, then, the *End Task*. If this does not solve the problem, select the *Users* tab, click the *Disconnect* or *Logoff* of the *Windows Task Manager* dialog box, and then *Yes*.
2. If the step 1 fails to work, confirm the hard disk indicator is turned off and press the power button for more than four seconds to turn off the system. Ten seconds later, turn your computer on.
3. If pressing the power button fails to turn off your computer, confirm the hard disk indicator is turned off and remove the AC adapter, then, the battery pack. Ten seconds later, reinstall the battery pack, connect the AC adapter and then, turn on your computer.

Why doesn't the touchpad function?

- The surface of the touchpad or your palm may be moist or dirty and grease. Wipe the touchpad with a soft, dry cloth.
- The touchpad may be disabled because of the connected USB mouse. Remove the mouse or enable the touchpad by following these instructions.

1. Click *start – Control Panel*.
2. Click *Printers and Other Hardware - Mouse*.
3. In the *Mouse Properties* dialog box, click the *Device Settings* tab.
4. Clear the box of *Disable internal pointing device when external USB pointing device is attached*.
5. Click *OK* to close the dialog box.
6. Close the *Printers and Other Hardware* dialog box.

Trouble with the Display

See also the *Adjusting the Display* section on page 1-19 and the *External Monitors* section on page 3-8.

Why is the screen blank?

- Confirm the computer is turned on by checking the power indicator. When it lights green, the computer is on.
- Press any key to find any power management feature has turned off the screen to save power.
- If you are using a battery pack, make sure it is correctly installed and has a charge remaining.
- Make sure the LCD screen is selected as the display by pressing **Fn+F5** ( ).
- Check whether the display is on by pressing **Fn+F11** ( ).
- If you still have the problem after trying the above, follow the steps in *Why doesn't the keyboard or the touchpad respond to your operation?* on page T-3.

Why does the external monitor display nothing or distorted images?

- Confirm the monitor is turned on.
- Confirm the monitor is connected correctly.
- Make sure the external monitor is selected as the output display by pressing **Fn+F5** ( ).
- If you use **Fn**+**F5** ( ) to change the display, the image may be distorted. Press **Fn**+**F5** ( ) again to return the previously selected display and then, use the *Display Properties* dialog box to change it again.
- Make sure the value of the *Screen resolution* field in the *Settings* tab of the *Display Properties* is same as or lower than the resolution of the external monitor.
- Make sure the external monitor is not near any electric devices having strong magnetic fields such as a TV set or radio.
- Do not share an outlet with a TV set or radio.

Why can't I change the display with the Fn+F5 keys?

- While you are playing a game or running animation, the **Fn**+**F5** ( ) key combination may not work. Close the currently running application(s).
- Use the *Display Properties* icon ( ) to change it.
- Use the *Display Properties* dialog box to change it.
- While the display is in the *Extended Desktop* mode, **Fn+F5** ( ) key combination may not work.

Why does the screen brightness increase or decrease not when intended?

- If you press the APM button, the selected screen brightness value of the APM button is applied.

Trouble with Floppy Disks

Why can't I use a floppy disk?

- Confirm the optional external floppy disk drive unit is correctly connected.
- Confirm the floppy disk is inserted correctly.
- Confirm the drive or file name is correct.

- The floppy disk may not be formatted or could be corrupted. Format the disk or use another disk.
- If you cannot write to a floppy disk, the disk may be write-protected. Eject the disk and ensure that the write-protect tab covers the detection hole.
- If you cannot write to a floppy disk, the disk may be full. Use another disk.
- 720KB (2DD) disks are not available to boot the computer.
- 720KB (2DD) disks cannot be formatted in your computer.
- The DISKCOPY command on 720KB (2DD) disks is not available.
- 720KB (2DD) disks are not appropriate to save data.
- 720KB (2DD) disks may not be available for data transfer with other computers using 1.44MB (2HD) disks.

Trouble with the Optical Drive

Why does not the drive open?

- Confirm your computer is turned on.
- When your computer is turned off, insert a fine rod into the drive tray ejection hole. (Try this only if the eject button does not work.)

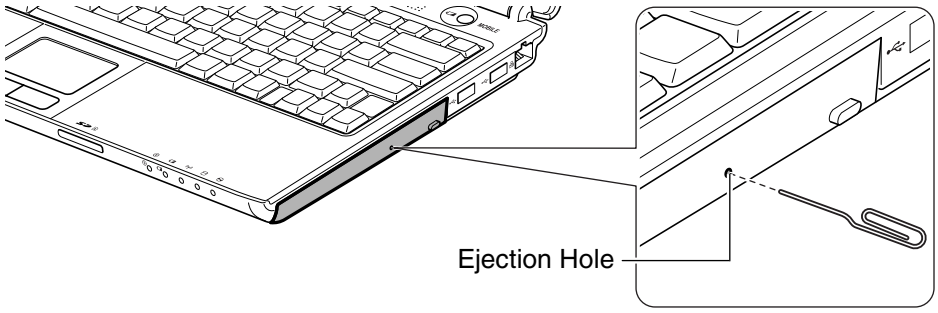

Why can't I read/write the data from/onto a disk or play files?

- Confirm the disk is inserted correctly.
- Confirm the drive and file names are correct.
- Confirm the disk is not stained or scratched.
- Confirm the disk or files are supported by the optical drive.

Why can't I write/delete the data onto/from a disk?

- Confirm the disk is available in writing or deleting data.
- If you wish to use the Windows CD writing software, you may need to enable it. (Refer to *Windows Help and Support*.)

Why doesn't the DVD video play smoothly?

- Ensure that the AC adapter is attached to the computer and a power source.
- Disable system standby and system hibernate.
- Set the APM button to the max power mode and then, select 100% for the CPU performance. (See the *Using the Advanced Power Management Button* section on page 2-9.)
- When playing a DVD video, you may experience a picture with irregular motion or frame dropouts, depending on videos. Enabling the *Hardware Decode Acceleration* function of *InterVideo WinDVD* may solve this problem. Follow these instructions to enable the function.

1. Quit the playback if it is running.
2. Right-click somewhere in the *InterVideo WinDVD5* window and select *Setup…* from the pop-up menu. The *Setup* dialog box will open.
3. Check the box of *Use Hardware Decode Acceleration* in the *Video Hardware Configuration* field.
4. Click *OK*.

   When the *Hardware Decode Acceleration* function is enabled, the *LCD Optimization* function is disabled. (Refer to *Help* of *WinDVD* for *LCD Optimization*.)

Why isn't the optical drive recognized?/Why can't I find the optical drive in My Computer window?

- If your computer is turned on with a DVD disk inserted in the drive, the drive may not be recognized. In this case, turn off your computer and open the disk tray by inserting a fine rod into the ejection hole. (Refer to the *Why does not the drive open?* section on page T-6.) Remove the disk from the drive, close the optical drive, and then, turn on your computer again.
- If you click the *Safely Remove Hardware* icon ( ) on the taskbar and MATSHITA xxxxx (xxxxx is your optical drive name), the optical drive powers off. The optical drive icon does not appear in the *My Computer* window while the drive is off.

- If you press the APM button and select the mode where the *Optical drive* is *OFF*, the optical drive powers off. To power it on, press the optical drive eject button or **Fn+F2** keys.

Trouble with the Hard Disk

Why can't I read or write data to/from the hard disk?

- Confirm the drive and file names are correct.
- Confirm the hard disk has sufficient free space.

Trouble with Communications

Why can't I communicate through the built-in modem?

- Confirm the telephone line is properly connected to the modem jack.
- Confirm the dial setting (pulse or tone) of Windows XP and/or communication software is matched with the telephone line.
- If you set your connection status using the *New Connection Wizard*, check the *Use dialing rules* in the *Properties* dialog box of that connection status. (Refer to the *Internet Connection* section on page 4-21.)
- Confirm the country/region setting is appropriate.
- Confirm the network configuration is appropriate.
- Confirm the user name or password is correct.
- Confirm the COM port in the communication software is set appropriately.
- Disable system standby and system hibernate.
- If an unusual device is attached to the line you are connecting to, the modem may not function properly. Remove the device or contact the dealer of the device.
- If your computer is connected to a PBX, consult the PBX maintenance staff or its service company. If the electric characteristics of your PBX are different from those of a regular analog line, the modem will not function properly. If you connect the modem to a digital PBX, both the modem and the PBX may be damaged.

Why is the access speed so slow?

- Set the APM button to the max power mode and then, select 100% for the CPU performance. (See the *Using the Advanced Power Management Button* section on page 2-9.)

- Close the applications currently opened.
- Try to connect another ISP (Internet Service Provider), or try to connect in some other time.

Why can't I access the LAN?

- Confirm the cable is properly connected to the LAN jack and the network hub.
- Confirm the network configuration is appropriate. (Refer to the *Configuring the LAN* section on page 4-3.)
- Confirm the user name or the password is correct.
- Reconfigure the network settings by following the *Network Setup Wizard*.

Why can't I detect the wireless access point on my computer?

- Confirm your computer is enabled for the wireless LAN communication.
- Confirm the access point is powered on.
- Confirm the antenna indicator is lit.
- Restart your computer.

Why can't I connect to the network via an access point?

- Confirm the wireless LAN antenna is enabled. When the antenna indicator lights green, the antenna is enabled. If not, press the **Fn+F1** ( ) keys.
- Confirm *Any available network (access point preferred)* is selected in the *Networks to access* field of the *Advanced* dialog box. (To open *Advanced* dialog box, refer to the *Communicating with Other Computers* section on page 4-15.)
- Confirm the *Network name* of your computer matches that of the access point you want to communicate with.
- Confirm the security settings of your computer equals to those of the access point if the encryption security of the access point is enabled.
  - Reenter the *Network key*.
  - When using the WEP key, confirm the key index is correctly selected.
- When you have more than one access points, your computer may be connected to other than right one you want to access. Follow the steps below.

1. Right-click the *Wireless Network Connection* icon ( ) on the taskbar; then, click *View Available Wireless Networks*.

2. Select the desired network in the *Available wireless networks* list; then, connect to the network. (Refer to the *Confirming the Status of Wireless Connection* section on page 4-14.)

- Repair the connection with the following steps.

1. Right-click the *Wireless Network Connection* icon.
2. Click *Repair*.

- If there are more than one available access points nearby, they interact in the connection. In this case, the connection speed will become low or the connection will stop.

- You may have accidentally enabled IEEE802.1x authentication. Disable it with the following steps.

1. Click *start – Control Panel*.
2. Click *Network and Internet Connections – Network Connections*. If Classic view is selected, double-click *Network Connections*.
3. Right-click *Wireless Network Connection* and click *Properties*.
4. Click *Wireless Networks* tab, select the network in *Preferred networks* field and click *Properties* button.
5. Select *Authentication* tab, then, clear the box of *Enable IEEE802.1x authentication for this network*.
6. Click *OK* twice and close the window.

Why can't I communicate with other computers through the wireless LAN?

- Confirm the antenna is enabled with pressing the **Fn+F1** ( ) key combination. When the antenna indicator is on, the antenna is enabled. (Refer to the *Activating the Wireless LAN Antenna* section on page 4-11.)

- Confirm each computer is enabled for wireless LAN.

- Confirm *Computer-to-computer (ad hoc) networks only* is selected in *Networks to Access* of *Advanced* dialog box. (To open the *Advanced* dialog box, refer to the *Communicating with Other Computers* section on page 4-15.) Also confirm the other computers are in ad-hoc mode.

- Adjust the distance between your computers by bringing your computer closer to others and remove any obstructions that may impede the communication; then, try to connect again.

- Confirm the IP address and the subnet mask of each computer are set correctly.

- Confirm the WEP keys are correctly set to your computer if the WEP security of the communicated computers is enabled.

How can I detect the MAC address?

- Follow the instructions below:

1. Click *start – All Programs – Accessories – Command Prompt*.
2. Type `ipconfig/all`; then, press **Enter**. The information about IP appears.
3. See the address of the *Physical Address* in the *Ethernet adapter Local Area Connection* section.
4. Type `exit`; then, press **Enter**.

Trouble with Peripherals

Why don't peripheral devices function?

- Confirm they are correctly connected to your computer.
- Confirm they are Windows XP compliant.
- Confirm drivers necessary for the devices are installed.

Why can't I print?

- Make sure the printer is turned on.
- Check whether your computer and the printer are connected correctly.
- Check whether the printer is ready to print.
- Check whether the printer has enough paper.
- Check whether the printer driver is installed.
- Click *start - Control Panel - Printers and Other Hardware – Printers and Faxes.* If the Classic view is selected, double-click the *Printers and Faxes* icon. Confirm your printer is installed. If not, click *Add a printer* of *Printer Tasks* to install it.
- See also the Windows help program by clicking *start - Help and Support*.

Why don't peripheral devices function correctly?

- Confirm they are Windows XP compliant.
- Confirm drivers necessary for the devices are installed.

- Disable *System standby* and *System hibernates*. If this does not work, set *Turn off hard disks* to *Never*.

Trouble with Security Settings

Why do I have the message "Your computer might be at risk" each time I boot my computer?

- Make sure the three functions (*Firewall*, *Automatic Updates*, and *Virus Protection*) in the *Security Center* are *ON*.
- If you have the message "Automatic Updates is turned off" addition to the above message, turn on the Automatic Updates to enable your computer periodically to update Windows.

Other Troubles

Why does my computer not power on?

- Disconnect the AC adapter from the computer, remove the battery pack, correctly reinstall the battery pack and connect the AC adapter, then turn on the computer again.

Why do I get the message *Pop-up blocked* in the information bar?

- The Microsoft Internet Explorer prevents most pop-ups from appearing by using the popup blocker function.
  - If you wish to have the pop-ups on the current web site;

  1. Start up the Microsoft Internet Explorer.
  2. Click on the information bar.
  3. Select "Temporarily Allow Pop-ups" or "Always Allow Pop-ups from This Site…".

  - If you wish to have pop-up ads on the specified web site;

  1. Start up the Microsoft Internet Explorer.
  2. Open the *Tools* menu and select the *Pop-up Blocker – Pop-up Blocker Settings….*
  3. Enter the URL to be permitted in the *Address of Web site to allow* field and then, click *Add*.

Why do I get the message *This site might require the following ActiveX control* in the information bar?

- The Microsoft Internet Explorer prevents active contents from appearing. The following steps allow them to appear. Before performing the steps, ensure the safety of the contents.

1. Click the information bar.
2. Select *Install ActiveX Control…* from the pop-up menu.
3. Click *Install*.

Why isn't the web site displayed properly?

- Disable the popup blocker. (Refer to the *Why do I get the message Pop-up blocked in the information bar?* Section on page T-12.)
- Install the appropriate ActiveX control application(s).

Why isn't the e-mail displayed properly?

- The Microsoft Outlook Express may prevent images in HTML e-mails from appearing. To display the image, follow theses steps. (Note that if you click the message, the sender of the e-mail may receive the fact that you open the message. Ensure the safety of the mail before operating these steps.)

1. Start up the Microsoft Outlook Express.
2. Select the e-mail containing the image to be displayed.
3. Click the message displayed in the bar.

Why does the battery pack discharge so quickly?

- Initialize the battery pack.

Why is the date and/or time incorrect?

- Correct the date and time in Windows. Double-click the time appearing on the taskbar and set them in *Date and Time Properties* dialog box.

Why can't I use a hardware device?

- Make sure the hardware device is not crossed out with an X mark using the following procedure.

1. Click *start – Control Panel.* Click *Performance and Maintenance*; then, *System*. If the Classic view is selected, double-click the *System* icon.

2. Click the *Hardware* tab; then, *Device Manager*.
3. Double-click the device you cannot use and confirm *Use this device (enable)* appears in the *Device usage* field.

Why can't I produce sound?

- Click or double-click the speaker symbol on the taskbar and check the Windows volume.
- If you press the APM button and select the mode where the *Audio* is *Mute*, the sound turns off.

Why can't I turn off my computer?

- Follow the instructions on *Why doesn't the keyboard or the glide pad function*?

Why is the background white?

- If you press the APM button and select the mode where the *Wallpaper* is white, the screen background change to white.

Why is my computer so hot?

- When charging the battery pack, its surrounding area or the front of the keyboard may become hot, but this is not a problem.

Why can’t I record the sound from the microphone?

- Follow the instructions below:

1. Double-click the speaker symbol on the taskbar.
2. Click *Options* and select *Properties*.
3. From the *Mixer device* pull down menu, select *Realtek HD Audio input* and then, click *OK*.
4. Confirm *Select* is checked in *MicVolume* of *Recording Control* dialog box.
5. Close the *Recording Control* dialog box.

Why can't I find the system drivers and software applications?

- You may accidentally remove them. Refer to the following to retrieve them.
  - The drivers are stored on the last recovery disk if you have created the recovery CDs.
  - The applications are stored on the last recovery disk if you have created the recovery CDs. Without the recovery CDs, you need to reinstall the operating system from the hard disk.

If you are not sure how to install them, consult local service staff.

Troubleshooting

Index

A

AC adapter
- connecting, 1-1
- using, 1-5

Account
- creating, 1-21
- switching, 1-21

APM button
- about, 2-8
- using, 2-9

Audio
- controlling output volume, 1-18

B

Backing up data, A-12

Battery pack
- changing, 2-5
- charging, 2-2
- checking level, 2-2
- conditioning, 2-4
- indicator, 1-4, 2-2,3
- low battery indication, 2-3

C

Cleaning
- computer, A-5

CD
- handling, 1-10
- inserting, 1-10
- supported disk, 1-9
- removing, 1-12
- troubleshooting, T-6

CD-R/RW, 1-12

Computer name, 4-5

D

Data execution prevention
- changing settings, A-10
- checking programs, A-10
- disabling, A-11

Display
- changing brightness, 1-19
- changing resolution, 1-19
- changing number of colors, 1-19
- switching the display, 1-8, 3-9
- troubleshooting, T-4
- turning off, 1-8

DVD
- handling, 1-10
- inserting, 1-10
- supported disk, 1-9
- removing, 1-12
- troubleshooting, T-6

DVD video
- parental control, 1-15
- playing, 1-13
- region code, 1-14

E

External monitor
- changing the primary monitor, 3-10
- connecting, 3-8
- disconnecting, 3-11
- extending an image, 3-10
- switching the display, 1-8, 3-9

F

File sharing
copying, 4-7
sharing, 4-6
Floppy disk
ejecting, 3-6
handling, 3-5
inserting, 3-5
troubleshooting, T-5
Floppy disk drive (external)
connecting, 3-4
removing, 3-6

H

Hard disk drive
troubleshooting, T-8

I

Indicators
battery, 1-4, 2-2,3
optical drive, 1-10
power, 1-3,4
status, xxii
wireless LAN antenna, 4-11

K

Keyboard
application key, 1-8
function keys, 1-8
special keys, 1-8
troubleshooting, T-3
windows key, 1-8

L

LAN
configuring the network settings, 4-3
configuring the LAN, 4-3
connecting to the LAN, 4-2
removing the cable, 4-2
troubleshooting, T-9

M

Memory module
finding the memory size, A-4
installing, A-1
removing, A-4
Modem
configuring, 4-20
connecting to telephone line, 4-19
removing the cable, 4-21
troubleshooting, T-8

N

Network Setup Utility
auto-switching, 4-24
loading, 4-23
running, 4-23
switching, 4-24

O

Optical Drive
powering off, 2-15
troubleshooting, T-6
using, 1-9

P

Passwords
changing, 1-23, 5-6
deleting, 1-23, 5-6
setting, 1-22, 5-5
PC cards
ejecting, 3-15
inserting, 3-14
Peripherals
audio equipment, 3-12
connecting guidelines, 3-1
external floppy disk drive, 3-4
external monitors, 3-8
headphones, 3-12
microphones, 3-13
PC cards, 3-14
printers, 3-7
speakers, 3-11
troubleshooting, T-11
USB devices, 3-3

Power
choosing AC or battery, 1-4
indicator, 1-3,4
Power saving
APM button, 2-9
system hibernate, 2-8
system standby, 2-8
Printers, 3-7

R

Re-installation
about, A-13
CD recovery, A-18, 22
creating recovery CDs, A-21
hard disk recovery, A-17
preparing, A-15
selecting way, A-16
Restoring data and settings, A-12

S

Screen Saver, 1-20
SD card
ejecting, 1-17
inserting, 1-16
Setup utility
advanced menu, 5-4
battery menu, 5-7
boot menu, 5-7
changing setting, 5-2
entering and exiting, 5-2
exit menu, 5-7
main menu, 5-3
running, 5-1
security menu, 5-4
Security cable, A-5
Security notice for the computer, xiv
Security notice for the wireless LAN, xv
Status indicators, xxii
System standby
about, 2-8
entering, 2-14
resuming from, 2-8
System hibernate
about, 2-8
entering, 2-14
resuming from, 2-8

T

Touchpad
changing the configuration, 1-7
clicking and double-clicking, 1-7
drag and drop, 1-7
scroll, 1-7
troubleshooting, T-3
using, 1-6
Troubleshooting
applications/drivers, T-15
CD/DVD, T-6
common problems, T-1
communications, T-8
display, T-4
floppy disk drive, T-5
hard disk drive, T-8
Internet Explorer, T-12
keyboard or touchpad, T-3
LAN, T-9
modem, T-8
peripherals, T-11
security settings, T-12

U

USB devices, 3-3

V

Virus protection
about, A-7
enabling, A-8
running LiveUpdate, A-9
scanning, A-9
update service, A-9

W

Wallpaper, 1-20
Windows
updating, xiv, A-7
firewall, xiv
Security Center, xiv
Wireless LAN,
activating the antenna, 4-11
communicating between computers, 4-15
configuring, 4-12

confirming the status, 4-14
connecting to a network, 4-13
security measures, 4-8
security modes, 4-17
security notice, xv
troubleshooting, T-9
wireless LAN modes, 4-8
Workgroup name, 4-5