EXHIBIT 4
BLOCK DIAGRAM & SCHEMATICS

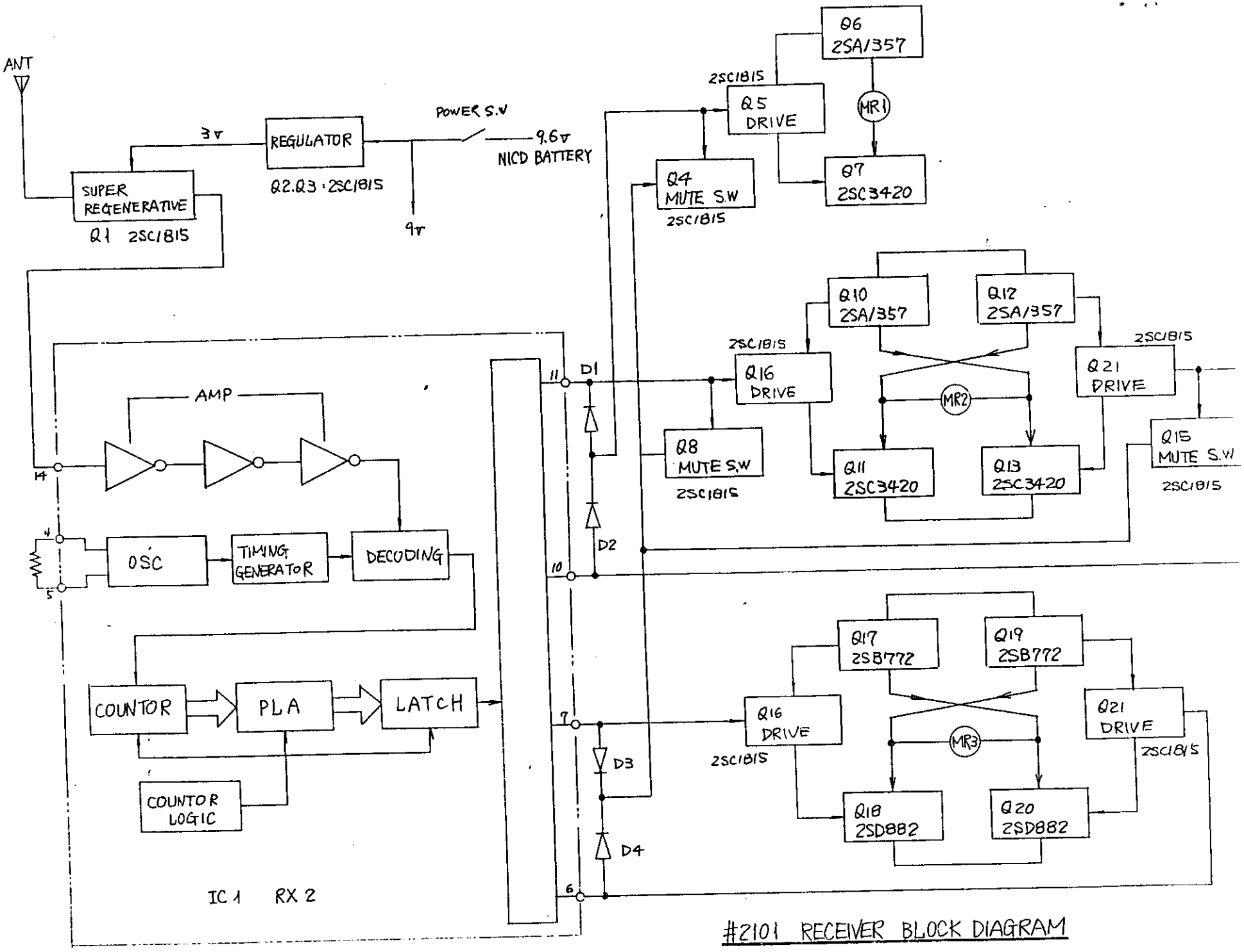

#2101 RECEIVER BLOCK DIAGRAM

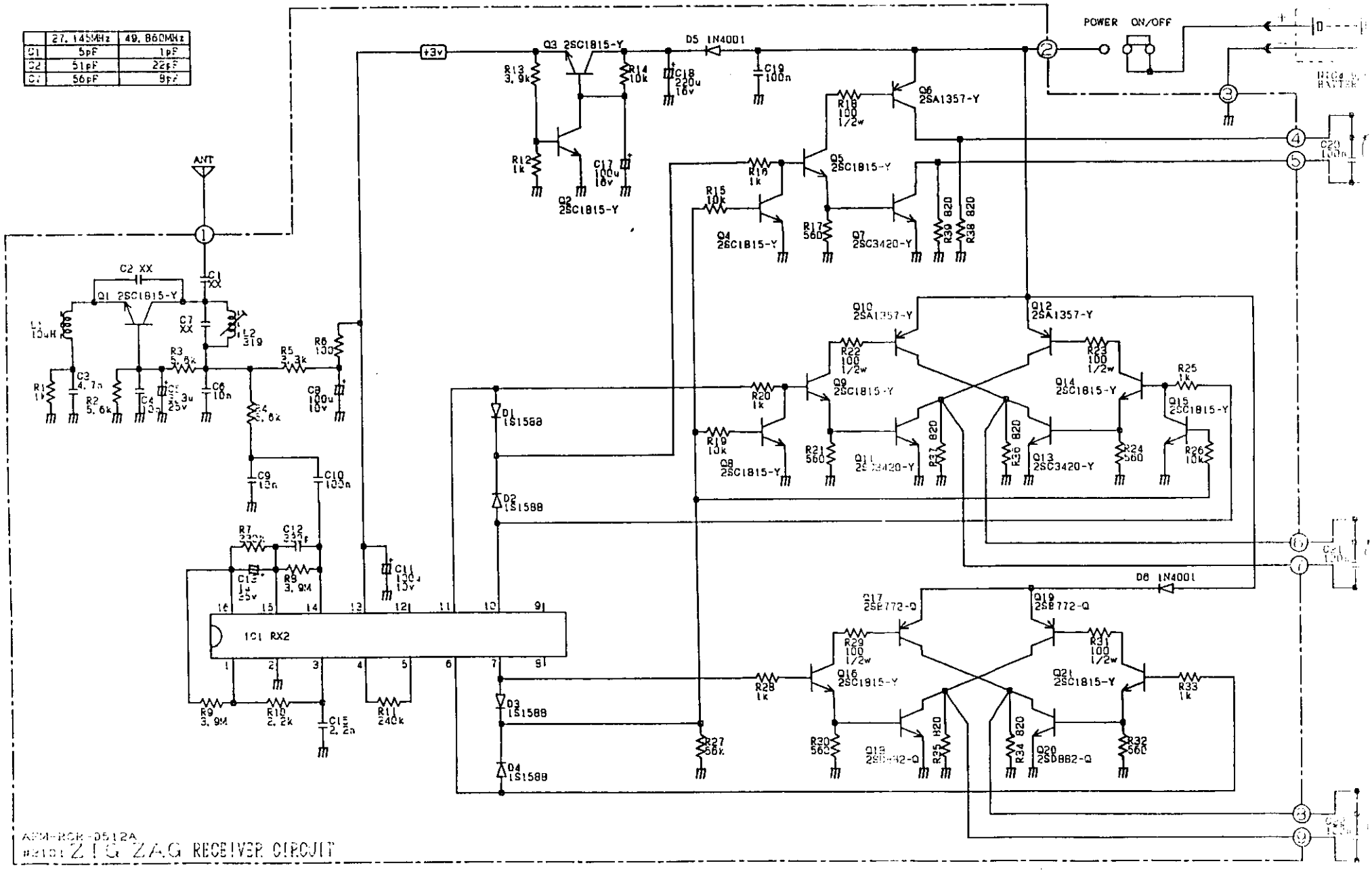
27.145MHz 49.860MHz
C1 5pF 1pF
C2 51pF 22pF
C3 56pF 9pF
ANT
+3v
Q3 2SC1815-Y
D5 1N4001
POWER ON/OFF
Q6 2SA1357-Y
Q5 2SC1815-Y
Q4 2SC1815-Y
Q7 2SC3420-Y
Q2 2SC1815-Y
Q1 2SC1815-Y
Q10 2SA1357-Y
Q12 2SA1357-Y
Q9 2SC1815-Y
Q8 2SC1815-Y
Q14 2SC1815-Y
Q15 2SC1815-Y
Q13 2SC3420-Y
D6 1N4001
Q17 2SB772-Q
Q19 2SB772-Q
Q16 2SC1815-Y
Q21 2SC1815-Y
Q20 2SD882-Q
IC1 RX2
D1 1S1588
D2 1S1588
D3 1S1588
D4 1S1588
APM-RCR-0512A
#2101 ZIG ZAG RECEIVER CIRCUIT