Owner's Handbook

Tiger 1200 XR, Tiger XRx, Tiger XRx-LRH, Tiger XCx, Tiger XRT and Tiger XCA

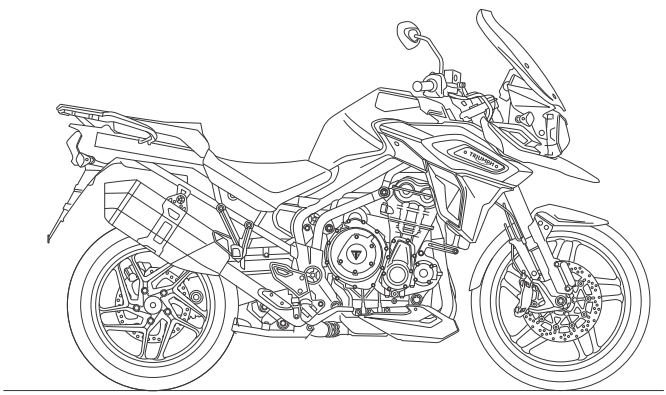

This handbook contains information on the Triumph Tiger 1200 XR, Tiger XRx, Tiger XRx-LRH, Tiger XCx, Tiger XRT and Tiger XCA motorcycles. Always store this Owner's Handbook with the motorcycle and refer to it for information whenever necessary.

The information contained in this publication is based on the latest information available at the time of printing. Triumph reserves the right to make changes at any time without prior notice, or obligation.

Not to be reproduced wholly or in part without the written permission of Triumph Motorcycles Limited.

© Copyright 10.2017 Triumph Motorcycles Limited, Hinckley, Leicestershire, England.

Publication part number 3855518-EN issue 1

TABLE OF CONTENTS

This handbook contains a number of different sections. The table of contents below will help you find the beginning of each section where, in the case of the major sections, a further table of contents will help you find the specific subject required.

Foreword 3
Safety First 7
Warning Labels 14
Parts Identification 16
Serial Numbers 20
Instruments 21
General Information 92
How to Ride the Motorcycle 143
Accessories, Loading and Passengers 163
Maintenance 169
Cleaning and Storage 214
Specifications 225
Index 230

FOREWORD

Warnings, Cautions and Notes

Throughout this Owner's Handbook particularly important information is presented in the following form:

Warning

This warning symbol identifies special instructions or procedures, which if not correctly followed could result in personal injury, or loss of life.

Caution

This caution symbol identifies special instructions or procedures, which, if not strictly observed, could result in damage to, or destruction of, equipment.

Note:

- **This note symbol indicates points of particular interest for more efficient and convenient operation.**

Warning Labels

At certain areas of the motorcycle, the symbol (above) can be seen. The symbol means CAUTION: REFER TO THE HANDBOOK and will be followed by a pictorial representation of the subject concerned.

Never attempt to ride the motorcycle or make any adjustments without reference to the relevant instructions contained in this handbook.

See **page 14** for the location of all labels bearing this symbol. Where necessary, this symbol will also appear on the pages containing the relevant information.

Maintenance

To ensure a long, safe and trouble free life for your motorcycle, maintenance should only be carried out by an authorised Triumph dealer.

Only an authorised Triumph dealer will have the necessary knowledge, equipment and skills to maintain your Triumph motorcycle correctly.

To locate your nearest authorised Triumph dealer, visit the Triumph web site at www.triumph.co.uk or telephone the authorised distributor in your country. Their address is given in the service record book that accompanies this handbook.

Off-Road Use

All models are designed for on-road and light off-road use. Light off-road use includes use on unpaved, dirt or gravel roads, but does not include riding on any motocross course, any off-road competition (such as motocross or enduro riding), or riding off-road with a passenger.

Light off-road use does not include jumping the motorcycle or riding over obstacles. Do not attempt to jump over any bumps or obstacles. Do not attempt to ride over any obstacles.

Noise Control System

Tampering with the noise control system is prohibited.

Owners are warned that the law may prohibit:

1. The removal or rendering inoperative by any person other than for purposes of maintenance, repair or replacement, of any device or element of design incorporated into any new vehicle for the purpose of noise control prior to its sale or delivery to the ultimate purchaser or while it is in use and,
2. the use of the vehicle after such device or element of design has been removed or rendered inoperative by any person.

Immobiliser and Tyre Pressure Monitoring System

This device complies with part 15 of the Federal Communications Commission (FCC) Rules.

Operation is subject to the following two conditions:

1. This device may not cause harmful interference.
2. This device must accept any interference received, including interference that may cause undesired operation.

Changes or modifications to the device could void the user's authority to operate the equipment.

Tyres

With reference to the Pneumatic Tyres and Tubes for Automotive Vehicles (Quality Control) Order, 2009, Cl. No. 3 (c), it is declared by M/s. Triumph Motorcycles Ltd. that the tyres fitted on this motorcycle meet the requirements of IS 15627: 2005 and comply with the requirements under Central Motor Vehicle Rules (CMVR), 1989.

Tiger 1200 XRx-LRH (Low Ride Height) Models

Unless stated otherwise, information, instructions, and specifications for Tiger 1200 XRx-LRH models are identical to those detailed in this Owner's Handbook for the Tiger 1200 XRx standard ride height models.

Note:

- **The Tiger 1200 XRx-LRH models cannot be fitted with a centre stand.**

Owner's Handbook

Warning

This Owner's Handbook, and all other instructions that are supplied with your motorcycle, should be considered a permanent part of your motorcycle and should remain with it even if your motorcycle is subsequently sold.

All riders must read this Owner's Handbook and all other instructions which are supplied with your motorcycle, before riding, in order to become thoroughly familiar with the correct operation of your motorcycle's controls, its features, capabilities and limitations. Do not lend your motorcycle to others as riding when not familiar with your motorcycle's controls, features, capabilities and limitations can lead to an accident.

Thank you for choosing a Triumph motorcycle. This motorcycle is the product of Triumph's use of proven engineering, exhaustive testing, and continuous striving for superior reliability, safety and performance.

Please read this Owner's Handbook before riding in order to become thoroughly familiar with the correct operation of your motorcycle's controls, its features, capabilities and limitations.

This handbook includes safe riding tips, but does not contain all the techniques and skills necessary to ride a motorcycle safely.

Triumph strongly recommends that all riders undertake the necessary training to ensure safe operation of this motorcycle.

This handbook is available from your local dealer in:

- English
- US English
- French
- German
- Italian
- Dutch
- Spanish
- Portuguese
- Swedish
- Japanese
- Thai.

Talk to Triumph

Our relationship with you does not end with the purchase of your Triumph. Your feedback on the buying and ownership experience is very important in helping us develop our products and services for you.

Please help us by ensuring your authorised Triumph dealership has your email address and registers this with us. You will then receive an online customer satisfaction survey invitation to your email address where you can give us this feedback.

Your Triumph Team.

SAFETY FIRST

The Motorcycle

Warning

All models are designed for on-road use and light off-road use. Light off-road use includes use on unpaved, dirt or gravel roads, but does not include riding on any motocross course, any off-road competition (such as motocross or enduro riding), or riding off-road with a passenger.

Light off-road use does not include jumping the motorcycle or riding over obstacles. Do not attempt to jump over any bumps or obstacles. Do not attempt to ride over any obstacles.

Extreme off-road use could lead to loss of motorcycle control and an accident.

Warning

Tiger 1200 XRx-LRH (Low Ride Height) Model

The Tiger 1200 XRx-LRH motorcycles are equipped with lowered suspension and have reduced ground clearance.

As a result, the cornering bank angles that can be achieved by the Tiger 1200 XRx-LRH are reduced, when compared with the standard ride height Tiger 1200 XRx.

When riding, keep in mind that your motorcycle's ground clearance is limited. Operate your motorcycle in an area free from traffic to gain familiarity with the motorcycle's ground clearance and bank angle limitations.

Banking to an unsafe angle or unexpected contact with the ground may cause instability, loss of motorcycle control and an accident.

Warning

This motorcycle is not designed to tow a trailer or be fitted with a sidecar.

Fitting a sidecar and/or a trailer may result in loss of motorcycle control and an accident.

Warning

This motorcycle is designed for use as a two-wheeled vehicle capable of carrying a rider on his/her own, or a rider and one passenger.

The total weight of the rider, and any passenger, accessories and luggage must not exceed the maximum load limit of:

Tiger 1200 XR - 230 kg (507 lb)

Tiger 1200 XRx - 228 kg (502 lb)

Tiger 1200 XRx-LRH - 230 kg (507 lb)

Tiger 1200 XRT - 228 kg (502 lb)

Tiger 1200 XCx - 223 kg (491 lb)

Tiger 1200 XCA - 224 kg (493 lb).

Warning

This motorcycle is fitted with a catalytic converter below the engine, which along with the exhaust system reaches very high temperature during engine operation.

Flammable materials such as grass, hay/straw, leaves, clothing and luggage etc. could ignite if allowed to come into contact with any part of the exhaust system and catalytic converter.

Always make sure that flammable materials are not allowed to contact the exhaust system or catalytic converter.

Fuel and Exhaust Fumes

Warning

PETROL IS HIGHLY FLAMMABLE:

Always turn off the engine when refuelling.

Do not refuel or open the fuel filler cap while smoking or in the vicinity of any open (naked) flame.

Take care not to spill any petrol on the engine, exhaust pipes or silencers when refuelling.

If petrol is swallowed, inhaled or allowed to get into the eyes, seek immediate medical attention.

Spillage on the skin should be immediately washed off with soap and water and clothing contaminated with petrol should immediately be removed.

Burns and other serious skin conditions may result from contact with petrol.

Warning

Never start your engine or let it run for any length of time in a closed area.

The exhaust fumes are poisonous and may cause loss of consciousness and death within a short time.

Always operate your motorcycle in the open-air or in an area with adequate ventilation.

Helmet and Clothing

Warning

When riding the motorcycle, both rider and passenger must always wear a motorcycle helmet, eye protection, gloves, boots, trousers (close fitting around the knee and ankle) and a brightly coloured jacket.

Brightly coloured clothing will considerably increase a rider's (or passenger's) visibility to other operators of road vehicles.

Although full protection is not possible, wearing correct protective clothing can reduce the risk of injury when riding.

Warning

A helmet is one of the most important pieces of riding gear as it offers protection against head injuries. You and your passenger's helmet should be carefully chosen and should fit you or your passenger's head comfortably and securely. A brightly coloured helmet will increase a rider's (or passenger's) visibility to other operators of road vehicles.

An open face helmet offers some protection in an accident though a full face helmet will offer more.

Always wear a visor or approved goggles to help vision and to protect your eyes.

Riding

Warning

Never ride the motorcycle when fatigued or under the influence of alcohol or other drugs.

Riding when under the influence of alcohol or other drugs is illegal.

Riding when fatigued or under the influence of alcohol or other drugs reduces the rider's ability to maintain control of the motorcycle and may lead to loss of control and an accident.

Warning

All riders must be licenced to operate the motorcycle. Operation of the motorcycle without a licence is illegal and could lead to prosecution.

Operation of the motorcycle without formal training in the correct riding techniques that are necessary to become licenced is dangerous and may lead to loss of motorcycle control and an accident.

Warning

Always ride defensively and wear the protective equipment mentioned elsewhere in this foreword. Remember, in an accident, a motorcycle does not give the same impact protection as a car.

Warning

This Triumph motorcycle should be operated within the legal speed limits for the particular road travelled. Operating a motorcycle at high speeds can be potentially dangerous since the time available to react to given traffic situations is greatly reduced as road speed increases. Always reduce speed in potentially hazardous driving conditions such as bad weather or heavy traffic.

Warning

Continually observe and react to changes in road surface, traffic and wind conditions. All two-wheeled vehicles are subject to external forces which may cause an accident. These forces include but are not limited to:

Wind draft from passing vehicles

Potholes, uneven or damaged road surfaces

Bad weather

Rider error.

Always operate the motorcycle at moderate speed and away from heavy traffic until you have become thoroughly familiar with its handling and operating characteristics. Never exceed the legal speed limit.

Handlebars and Footrests

Warning

The rider must maintain control of the vehicle by keeping hands on the handlebars at all times.

The handling and stability of a motorcycle will be adversely affected if the rider removes his hands from the handlebars, resulting in loss of motorcycle control and an accident.

Warning

The rider and passenger must always use the footrests provided, during operation of the vehicle.

By using the footrests, both rider and passenger will reduce the risk of inadvertent contact with any motorcycle components and will also reduce the risk of injury from entrapment of clothing.

Parking

Warning

Always switch off the engine and never leave any keys with the motorcycle before leaving it unattended. By removing any keys, the risk of use of the motorcycle by unauthorised or untrained persons is reduced.

When parking the motorcycle, always remember the following:

Engage first gear to help prevent the motorcycle from rolling off the stand.

The engine and exhaust system will be hot after riding. DO NOT park where pedestrians, animals and/or children are likely to touch the motorcycle.

Do not park on soft ground or on a steeply inclined surface. Parking under these conditions may cause the motorcycle to fall over.

For further details, please refer to the 'How to Ride the Motorcycle' section of this Owner's Handbook.

Parts and Accessories

Warning

Owners should be aware that the only approved parts, accessories and conversions for any Triumph motorcycle are those which carry official Triumph approval and are fitted to the motorcycle by an authorised dealer.

In particular, it is extremely hazardous to fit or replace parts or accessories whose fitting requires the dismantling of, or addition to, either the electrical or fuel systems and any such modification could cause a safety hazard.

The fitting of any non-approved parts, accessories or conversions may adversely affect the handling, stability or other aspect of the motorcycle operation that may result in an accident causing injury or death.

Triumph does not accept any liability whatsoever for defects caused by the fitting of non-approved parts, accessories or conversions or the fitting of any approved parts, accessories or conversions by non-approved personnel.

Maintenance/Equipment

Warning

Consult your authorised Triumph dealer whenever there is doubt as to the correct or safe operation of this Triumph motorcycle.

Remember that continued operation of an incorrectly performing motorcycle may aggravate a fault and may also compromise safety.

Warning

Ensure all equipment that is required by law is installed and functioning correctly. The removal or alteration of the motorcycle's lights, silencers, emission or noise control systems can violate the law. Incorrect or improper modification may adversely affect the handling, stability or other aspect of the motorcycle operation, which may result in an accident causing injury or death.

Warning

If the motorcycle is involved in an accident, collision or fall, it must be taken to an authorised Triumph dealer for inspection and repair. Any accident can cause damage to the motorcycle that, if not correctly repaired, may cause a second accident that may result in injury or death.

This page intentionally left blank

WARNING LABELS

The labels detailed on this and the following pages indicate important safety information found in this handbook. Before riding, make sure that all riders have understood and complied with all the information to which these labels relate.

For illustration purposes, the Tiger 1200 XR motorcycle is shown.

Warning Label Locations

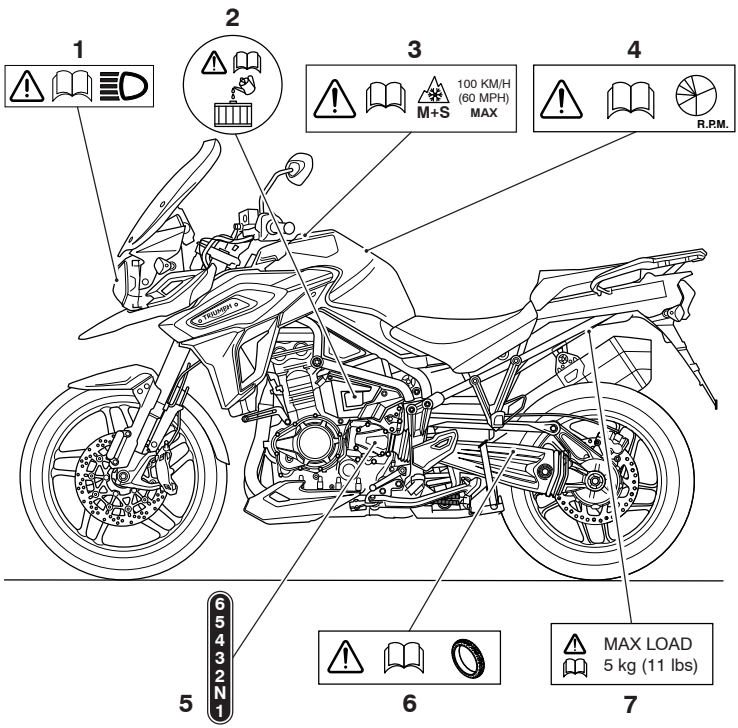

1. Headlight **(page 208)**
2. Coolant **(page 179)**
3. Snow and Mud Tyres **(page 225)**
4. Running-In **(page 139)**
5. Gear Position **(page 150)**
6. Tyres **(page 195)**
7. Panniers (if fitted) **(page 132)**

Caution

All warning labels and decals, with the exception of the Running-in label, are fitted to the motorcycle using a strong adhesive. In some cases, labels are installed prior to an application of paint lacquer.

Therefore, any attempt to remove the warning labels will cause damage to the paintwork or body work.

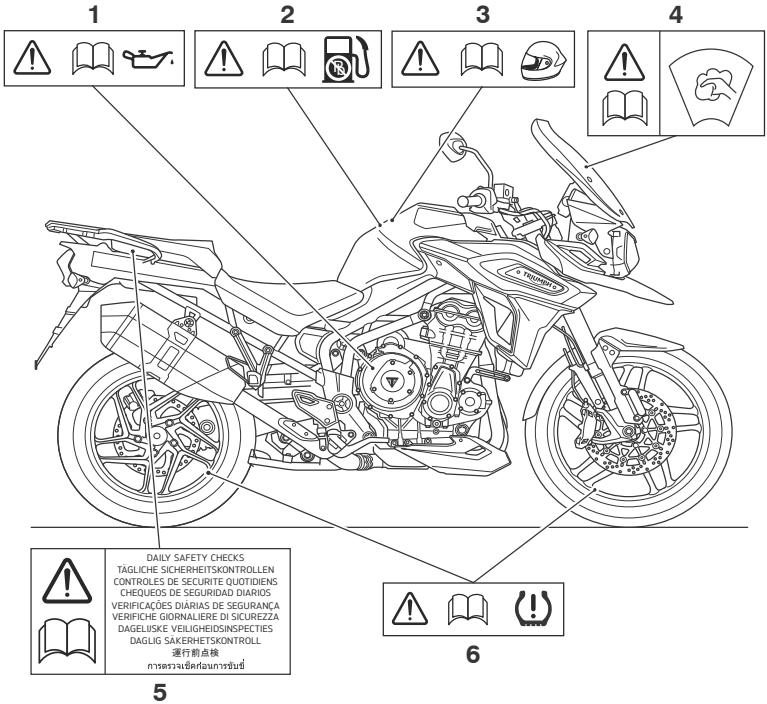

1. Engine Oil (**page 175**)
2. Unleaded Fuel (**page 117**)
3. Helmet (**page 9**)
4. Windscreen (**page 120**)
5. Daily Safety Checks (**page 140**)
6. Tyre Pressure Monitoring System (TPMS) (if fitted) (**page 114**)

PARTS IDENTIFICATION

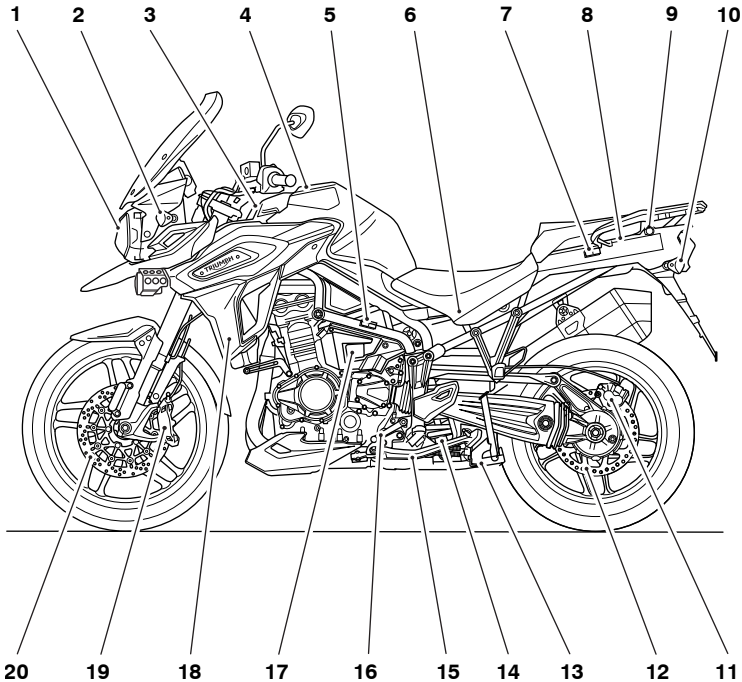

1. Headlight
2. Front indicator
3. Electrical accessory socket
4. Fuel tank and fuel filler cap
5. Rider's heated seat switch (Tiger 1200 XR only)
6. Battery and fuse boxes (under the seat)
7. Passenger's heated seat switch (if fitted)
8. USB socket (under the seat)
9. Electrical accessory socket (if fitted)
10. Rear indicator
11. Rear brake caliper
12. Rear brake disc
13. Centre stand (if fitted)
14. Rear suspension damping adjuster (Tiger 1200 XR only)
15. Side stand
16. Gear change pedal
17. Coolant expansion tank
18. Radiator cowl
19. Front brake caliper
20. Front brake disc

Parts Identification (Continued)

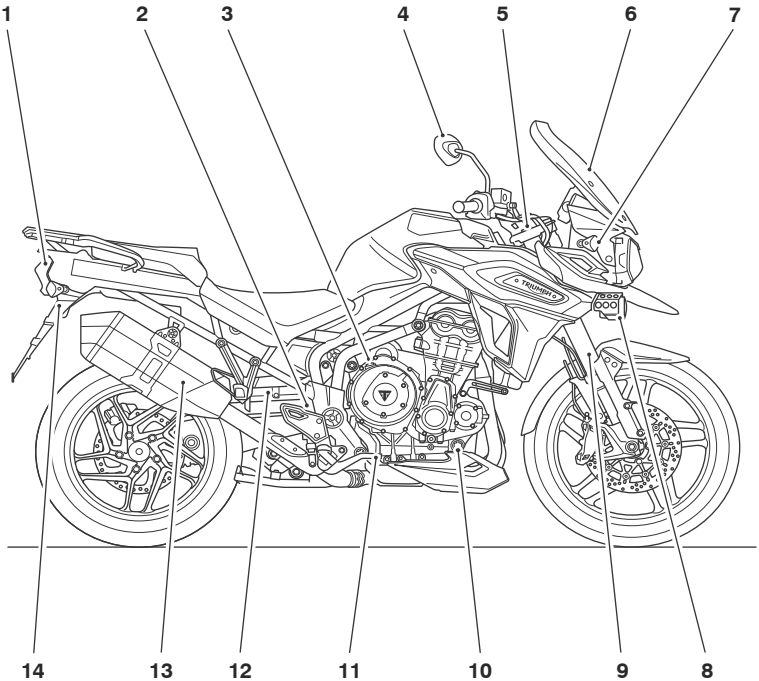

1. Rear light
2. Rear brake fluid reservoir
3. Oil filler cap
4. Mirror
5. Front suspension damping adjusters (Tiger 1200 XR only)
6. Windscreen
7. Headlight adjuster
8. Front fog lights (if fitted)
9. Front fork
10. Engine oil level sight glass
11. Rear brake pedal
12. Rear suspension spring preload adjuster (model specific)
13. Silencer
14. Seat lock

Rider View Parts Identification

Tiger 1200 XR Only

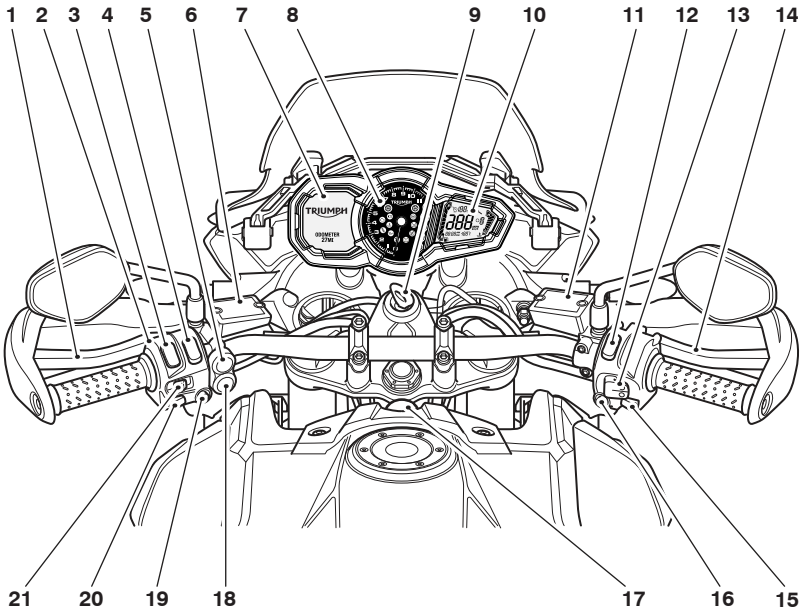

1. Clutch lever
2. Instrument select button
3. Headlight dip switch
4. Instrument scroll button
5. Fog lights switch (if fitted)
6. Clutch fluid reservoir
7. Multifunction display screen
8. Tachometer
9. Ignition switch
10. Motorcycle status display screen
11. Front brake fluid reservoir
12. Engine stop switch
13. Cruise control adjust button
14. Front brake lever
15. Starter button
16. Hazard warning lights button
17. Electrical accessory socket
18. Heated grips switch (if fitted)
19. Mode button
20. Horn button
21. Direction indicator switch

Rider View Parts Identification

All Models except Tiger 1200 XR

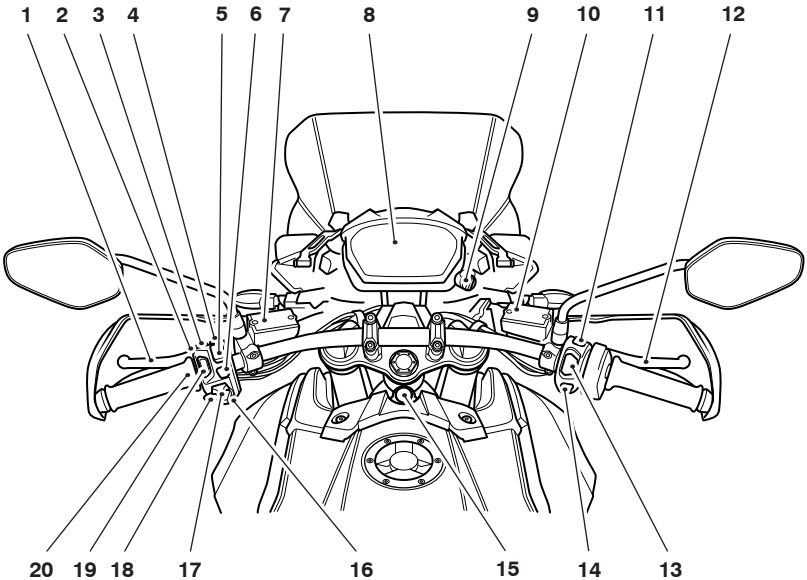

ckcx

1. Clutch lever
2. Headlight dip switch
3. Heated seats switch (if fitted)
4. Front fog lights switch (if fitted)
5. Cruise control adjust switch
6. MODE button
7. Clutch fluid reservoir
8. Multifunction display screen
9. Master ignition switch (if fitted)
10. Front brake fluid reservoir
11. Hazard warning lights switch
12. Front brake lever
13. Engine start/stop switch
14. HOME button
15. Joystick button
16. Electrical accessory socket
17. Direction indicator switch
18. Horn button
19. Daytime Running Lights (DRL) switch (if fitted)
20. Heated grips switch (if fitted)

SERIAL NUMBERS

Vehicle Identification Number (VIN)

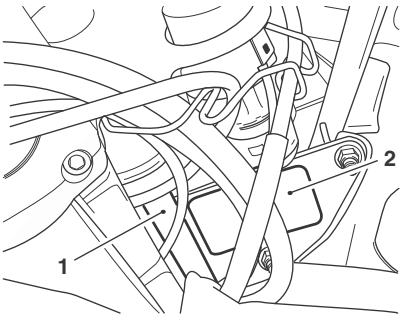

1. **VIN number**
2. **Label**

The Vehicle Identification Number (VIN) is stamped into the steering head area of the frame. In addition, It is displayed on a label which is mounted on the right hand side of the front subframe.

Record the vehicle identification number in the space provided below.

Engine Serial Number

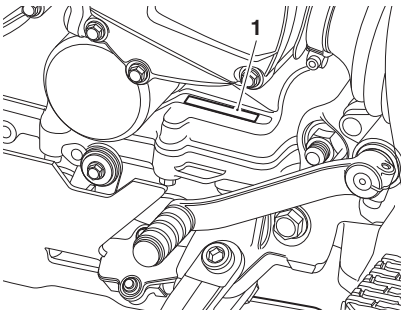

1. **Engine serial number**

The engine serial number is stamped on the engine crankcase, immediately below the gearbox.

Record the engine serial number in the space provided below.

INSTRUMENTS

Instrument Displays Overview

There are two types of instrument displays fitted to specific motorcycles models.

All Models except Tiger 1200 XR

All models except for Tiger 1200 XR are fitted with a full colour Thin Film Transistor (TFT) digital instrument display.

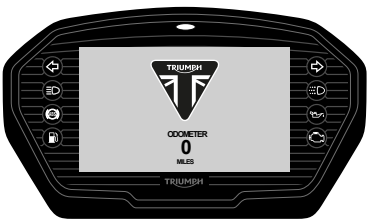

Thin Film Transistor (TFT) Instrument Display

For more information on the TFT instrument display and its operation, see page 22.

Tiger 1200 XR Models Only

Only Tiger 1200 XR models are fitted with a Liquid Crystal Display (LCD) instrument display.

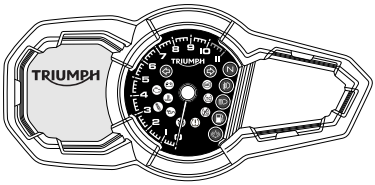

Liquid Crystal Display (LCD) Instrument Display

For more information on the LCD instrument display and its operation, see page 59.

Thin Film Transistor (TFT) Instrument Display

Table of Contents

Instrument Panel Layout 23
TFT Display Navigation 24
TFT Themes and Styles 24
Warning Lights 25
Speedometer and Odometer 31
Tachometer 31
Gear Position Display 32
Fuel Gauge 32
Service Interval Announcement 33
Ambient Air Temperature 33
Riding Modes 34
Riding Mode Selection 35
Information Tray 38
Main Menu 44
Instrument Panel Position Adjustment 58

Instrument Panel Layout

The TFT instrument display is fitted on all models except Tiger 1200 XR. Not all instrument features are available on all models.

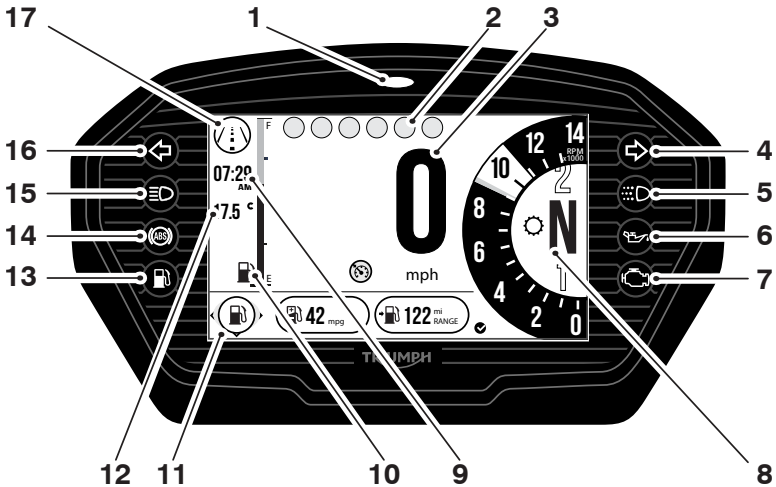

1. Alarm/immobiliser status indicator light (alarm is an accessory kit)
2. Warning lights
3. Speedometer
4. Right hand indicator
5. Daytime Running Light (DRL) (if fitted)
6. Oil pressure warning light
7. Engine management Malfunction Indicator Light (MIL)
8. Gear position symbol
9. Clock
10. Fuel gauge
11. Information tray
12. Ambient air temperature
13. Fuel level low warning light
14. ABS warning light
15. High beam warning light
16. Left hand indicator
17. Current riding mode

TFT Display Navigation

The table below describes the instrument icons and buttons used to navigate through the instrument menus described in this handbook.

	Home button (right hand switch housing).
	Mode button (left hand switch housing).
	Joystick left/right or up/down.
	Joystick Centre (press).
▶	Selection arrow (right shown).
	Information Tray - left/right scroll via joystick.
	Information Tray - up/down scroll via joystick.
	Option available within the Information Tray - scroll via joystick up/down.
	Short press (press and release) via joystick centre.
	Long press (press and hold) via joystick centre.
	Reset current feature, (only available with joystick long press).

TFT Themes and Styles

There is the option to change the style of the instrument display.

Depending on the motorcycle model, there are either one or two themes. Each theme has three different styles to select from.

To select a theme or style, see **page 53**.

Styles can also be selected through the Style Options tray, see **page 43**.

Theme 1, Style 1 is used for visual recognition throughout this owner's handbook.

Theme 1

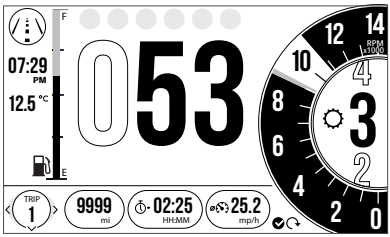

Theme 1 Style 1

Warning Lights

Note:

- **When the ignition is switched on, the instrument warning lights will illuminate for 1.5 seconds and will then go off (except those which remain on until the engine starts, as described in the following pages).**

For additional warning and information messages, see page 39.

Engine Management System Malfunction Indicator Light (MIL)

The Malfunction Indicator Light (MIL) for the engine management system illuminates when the ignition is switched ON (to indicate that it is working) but should not become illuminated when the engine is running.

If the MIL becomes illuminated when the engine is running, this indicates that a fault has occurred in one or more of the systems controlled by the engine management system. In such circumstances, the engine management system will switch to 'limp-home' mode so that the journey may be completed, if the fault is not so severe that the engine will not run.

Warning

Reduce speed and do not continue to ride for longer than is necessary with the MIL illuminated. The fault may adversely affect engine performance, exhaust emissions and fuel consumption. Reduced engine performance could cause a dangerous riding condition, leading to loss of control and an accident. Contact an authorised Triumph dealer as soon as possible to have the fault checked and rectified.

Note:

- **If the MIL flashes when the ignition is switched ON contact an authorised Triumph dealer as soon as possible to have the situation rectified. In these circumstances the engine will not start.**

Low Oil Pressure Warning Light

With the engine running, if the engine oil pressure becomes dangerously low, the low oil pressure warning light will illuminate.

Caution

Stop the engine immediately if the low oil pressure warning light illuminates. Do not restart the engine until the fault has been rectified.

Severe engine damage will result from running the engine when the low oil pressure warning light is illuminated.

Note:

- **The low oil pressure warning light will illuminate if the ignition is switched ON without running the engine.**

Immobiliser/Alarm Indicator Light

This Triumph motorcycle is fitted with an engine immobiliser which is activated when the ignition is switched off.

Without Alarm Fitted

When the ignition is switched off, the immobiliser light will flash on and off for 24 hours to show that the engine immobiliser is on. When the ignition is switched on, the immobiliser and the indicator light will be off.

If the indicator light remains on it indicates that the immobiliser has a malfunction that requires investigation. Contact an authorised Triumph dealer as soon as possible to have the fault checked and rectified.

With Alarm Fitted

The immobiliser/alarm light will only illuminate when the conditions described in the genuine Triumph accessory alarm instructions are met.

ABS (Anti-Lock Brake System) Warning Light

When the ignition is switched on, it is normal that the ABS warning light will flash on and off. The light will continue to flash after engine start-up until the motorcycle first reaches a speed exceeding 6 mph (10 km/h) when it will go off.

Note:

- **Traction control will not function if there is a malfunction with the ABS. The warning lights for the ABS, traction control and the MIL will be illuminated.**

The warning light should not illuminate again until the engine is restarted unless there is a fault, or the ABS is switched off - the warning light will remain illuminated.

If the warning light becomes illuminated at any other time while riding it indicates that the ABS has a malfunction that requires investigation.

Warning

If the ABS is not functioning, the brake system will continue to function as a non-ABS equipped brake system. Do not continue to ride for longer than is necessary with the warning light illuminated. Contact an authorised Triumph dealer as soon as possible to have the fault checked and rectified. In this situation braking too hard will cause the wheels to lock resulting in loss of motorcycle control and an accident.

For details on how to select different ABS settings, see page 34.

Traction Control (TC) Indicator Light

The TC indicator light is used to indicate that the traction control system is active and is working to limit rear wheel slip during periods of hard acceleration or under wet or slippery road conditions.

Warning

If the traction control is not functioning, care must be taken when accelerating and cornering on wet/slippery road surfaces to avoid rear wheel spin. Do not continue to ride for longer than is necessary with the Engine Management System Malfunction Indicator Light (MIL) and traction control warning lights illuminated. Contact an authorised Triumph dealer as soon as possible to have the fault checked.

Hard acceleration and cornering in this situation may cause the rear wheel to spin resulting in loss of motorcycle control and an accident.

TC Indicator Light Operation:

TC Switched On:

- Under normal riding conditions the indicator light will remain off.
- The indicator light will flash rapidly when the traction control system is working to limit rear wheel slip during periods of hard acceleration or under wet or slippery road conditions.

TC Switched Off:

The indicator light will not illuminate. Instead the TC disabled warning light will be illuminated (see page 27).

Note:

- **Traction control will not function if there is a malfunction with the ABS system. The warning lights for the ABS, traction control and the MIL will be illuminated.**

Traction Control (TC) Disabled Warning Light

The TC disabled warning light should not illuminate unless traction control is switched off or there is a malfunction.

If the warning light becomes illuminated at any other time while riding, it indicates that the traction control system has a malfunction that requires investigation.

Cruise Control Light

The cruise control can only be activated when the motorcycle is travelling at a speed between 19 to 100 mph (30 to 160 km/h) and is in 3 rd gear or higher. When activated, the cruise control light will be illuminated (see page 107).

Warning

Cruise control must only be used where you can ride safely at a steady speed.

Cruise control should not be used when riding in heavy traffic, on roads with sharp/blind bends or when they are slippery.

Using cruise control in heavy traffic, on roads with sharp/blind bends or when they are slippery, may result in loss of motorcycle control and an accident.

Triumph Semi Active Suspension (TSAS) Warning Light

When the ignition is switched on the warning light will illuminate for 1.5 seconds and then go out.

The warning light has two modes:

Calibration

The TSAS system will recalibrate adjustment motors under the following conditions:

- If the battery has been disconnected for any reason.
- If a fault occurs with the TSAS system during normal operation.

The warning light will flash twice every second during system recalibration, and a message will be shown in the display.

During recalibration the motorcycle must remain stationary. Riding the motorcycle will cause the recalibration to be stopped and the warning light to remain lit.

Fault

If the warning light illuminates continuously or at any other time it indicates one of the following:

- A system recalibration has been interrupted. Allow the system to recalibrate.
- A fault has occurred with the system that requires investigation. Warning messages will be shown in the display. Allow the system to recalibrate. If the fault is still present after recalibration, contact an authorised Triumph dealer as soon as possible to have the fault checked and rectified.

Full details of the Triumph Semi Active Suspension (TSAS) system and the system calibration are described starting on page 110.

Direction Indicators

When the indicator switch is turned to the left or right, the indicator warning light will flash on and off at the same speed as the direction indicators.

Hazard Warning Lights

To turn the hazard warning lights on or off, press and release the hazard warning light switch.

The ignition must be switched ON for the hazard warning lights to function.

The hazard warning lights will remain on if the ignition is switched off, until the hazard warning light switch is pressed again.

High Beam Button

When the high beam button is pressed the high beam will be switched on. Each press of the button will swap between dip and high beam.

Note:

- **If daytime running lights are fitted to the motorcycle, the high beam button has additional functionality.**

If the DRL switch is in the daytime running lights position, then press and hold the high beam button to turn the high beam on. It will remain on as long as the button is held in and will turn off as soon as the button is released.

Note:

- **A lighting on/off switch is not fitted to this model. The rear light and licence plate light all function automatically when the ignition is turned to the ON position.**
- **The headlight will function when the ignition switch is turned to the ON position. The headlight will go off while pressing the starter button until the engine starts.**

Daytime Running Lights (DRL)

When the ignition is switched ON and the daytime running lights switch is set to DAYTIME RUNNING LIGHTS, the daytime running lights warning light will illuminate.

The daytime running lights and low beam headlights are operated manually using a switch on the left hand switch housing, see page 100.

Warning

Do not ride for longer than necessary in poor ambient light conditions with the Daytime Running Lights (DRL) in use.

Riding with the Daytime Running Lights when dark, in tunnels or where poor ambient light is apparent may reduce the riders vision or dazzle other road users.

Dazzling other road users or reduced vision in low ambient light levels may result in loss of motorcycle control and an accident.

Note:

- **During daylight hours the Daytime Running Lights improve the motorcycles visibility to other road users.**
- **Low beam headlights must be used in any other conditions unless the road conditions allow for high beam headlights to be used.**

Low Fuel Warning Light

The low fuel warning light will illuminate when there are approximately 3.5 litres of fuel remaining in the tank.

Tyre Pressure Monitoring System (TPMS) Warning Light (if fitted)

Warning

Stop the motorcycle if the Tyre Pressure Monitoring System (TPMS) warning light illuminates red.

Do not ride the motorcycle until the tyres have been checked and the tyre pressures are at their recommended pressure when cold.

Note:

- **The Tyre Pressure Monitoring System (TPMS) is available as an accessory option on all models.**

The TPMS warning light will only illuminate red when the front or rear tyre pressure is below the recommended pressure, or no signal is received. It will not illuminate if the tyre is over inflated. For more information, see page 114.

When the warning light is illuminated, the TPMS symbol indicating which is the deflated tyre and its pressure will automatically be visible in the display area.

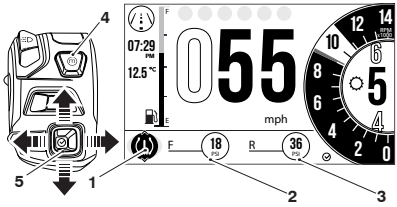

CJWW

1. **TPMS light**
2. **Front tyre indicator**
3. **Rear tyre indicator**
4. **Mode button**
5. **Joystick control**

The tyre pressure at which the warning light illuminates is temperature compensated to 20°C but the numeric pressure display associated with it is not, see **page 196**. Even if the numeric display seems at or close to the standard tyre pressure when the warning light is on, a low tyre pressure is indicated and a puncture is the most likely cause.

Speedometer and Odometer

The speedometer indicates the road speed of the motorcycle.

The odometer shows the total distance that the motorcycle has travelled.

Tachometer

Caution

Never allow engine speed to enter the red zone as severe engine damage may result.

The tachometer shows the engine speed in revolutions per minute - rpm (r/min). At the end of the tachometer range there is the red zone.

Engine speeds in the red zone are above maximum recommended engine speed and are also above the range for best performance.

Gear Position Display

The gear position display indicates which gear (one to six) has been engaged. When the transmission is in neutral (no gear selected), the display will show N.

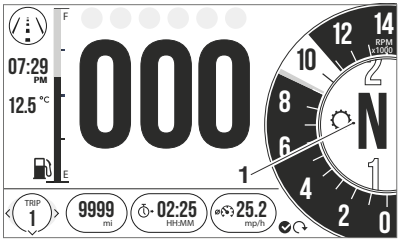

1. **Gear position display (neutral position shown)**

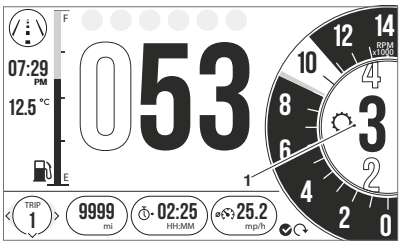

1. **Gear position display (third gear shown)**

Fuel Gauge

The fuel gauge indicates the amount of fuel in the tank.

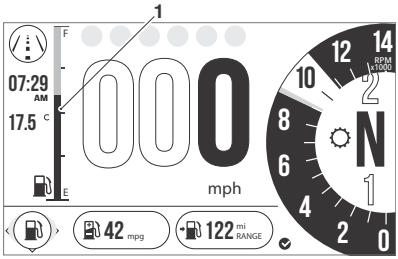

1. **Fuel gauge**

With the ignition switched on, a filled line indicates the fuel remaining in the fuel tank.

Note:

- **The fuel gauge colours may vary depending on the theme or style chosen.**

The gauge markings indicate intermediate fuel levels between E (empty) and F (full).

The low fuel warning light will illuminate when approximately 3.5 litres of fuel is remaining in the tank and you should refuel at the earliest opportunity.

The range to empty and instantaneous fuel consumption will be also shown in the information tray. Press the joystick centre to acknowledge and hide the low fuel warning.

After refuelling, the fuel gauge and range to empty information will be updated only while riding the motorcycle. Depending on the riding style, updating could take up to five minutes.

Service Interval Announcement

The service interval announcement shows the total distance or time that the motorcycle has remaining before a service is required. When the remaining distance is 0 miles (0 km), or the remaining time is 0 days, the service symbol will remain on until the service has been carried out and the system has been reset by your authorised Triumph dealer.

If the service is overdue then OVERDUE will be shown and the service symbol will be shown in the information tray.

When the service has been carried out by your authorised Triumph dealer, the system will be reset.

The distance to the next service or OVERDUE message will also be shown on the instrument start up screen when the ignition is turned on.

The service symbol will also be shown if a fault has occurred and the ABS and/or MIL warning lights are illuminated. Contact an authorised Triumph dealer as soon as possible to have the fault checked and rectified.

Ambient Air Temperature

The ambient air temperature is displayed as either °C or °F.

When the motorcycle is stationary the heat of the engine may affect the accuracy of the ambient temperature display.

Once the motorcycle starts moving the display will return to normal after a short time.

To change the temperature from °C or °F see **page 55**.

Frost Symbol

The frost symbol will illuminate if the ambient air temperature is 4°C (39°F) or lower.

The frost symbol will remain illuminated until the temperature rises to 6°C (42°F).

An alert will also be displayed in the information tray.

CAUTION: LOW AIR TEMPERATURE
RISK OF SURFACE ICE
1/3 warnings

Warning

Black ice (sometimes called clear ice) can form at temperatures several degrees above freezing (0°C (32°F)), especially on bridges and in shaded areas.

Always take extra care when the temperatures are low and reduce speed in potentially hazardous driving conditions such as bad weather.

Excess speed, hard acceleration, heavy braking or hard cornering when roads are slippery may result in loss of motorcycle control and an accident.

Riding Modes

The riding modes allow adjustment of the throttle response (MAP), Anti-lock Brake System (ABS) and Traction Control (TC) settings to suit differing road conditions and rider preferences.

Riding modes can be conveniently selected using the MODE button and joystick located on the left hand switch housing, whilst the motorcycle is stationary or moving, see page 35.

Up to six riding modes are available depending on your model's specification. If a riding mode is edited (other than the RIDER mode), the icon will change as shown below.

Default Icon	Rider Edited Icon	Description
	-	RIDER
		RAIN
		ROAD
		SPORT
		OFF-ROAD
PRO	PRO	OFF-ROAD PRO

Each riding mode is adjustable. For more information, see page 46.

Availability of the ABS, MAP and TC setting options vary between models.

Riding Mode Selection

Warning

The selection of riding modes whilst the motorcycle is in motion requires the rider to allow the motorcycle to coast (motorcycle moving, engine running, throttle closed, clutch lever pulled in and no brakes applied) for a brief period of time.

Riding mode selection whilst the motorcycle is in motion should only be attempted:

•At low speed

•In traffic-free areas

•On straight and level roads or surfaces

•In good road and weather conditions

•Where it is safe to allow the motorcycle to briefly coast.

Riding mode selection whilst the motorcycle is in motion MUST NOT be attempted:

•At high speeds

•Whilst riding in traffic

•During cornering or on winding roads or surfaces

•On steeply inclined roads or surfaces

•In poor road/weather conditions

•Where it is unsafe to allow the motorcycle to coast.

Failure to observe this important warning may lead to loss of motorcycle control and an accident.

Warning

If ABS and/or traction control (TC) has been disabled in the Main Menu as described on, **page 50** for ABS and/or **page 50** for TC settings saved for all riding modes will be overridden.

ABS and/or TC will remain off regardless of your riding mode selection until they have been re-enabled or, the ignition has been switched off then on again, or the MODE button is held in to return to the default ROAD mode (which enables ABS and/or TC when the motorcycle is next stationary).

If the ABS is disabled, the brake system will function as a non-ABS equipped braking system. In this situation braking too hard will cause the wheels to lock, and may result in loss of motorcycle control and an accident.

If the traction control is disabled, the motorcycle will handle as normal but without traction control. In this situation accelerating too hard on wet/slippery road surfaces may cause the rear wheel to slip, and may result in loss of motorcycle control and an accident.

Warning

After selecting a riding mode, operate the motorcycle in an area free from traffic to gain familiarity with the new settings.

Do not loan your motorcycle to anyone as they may change the riding mode settings from the one you are familiar with, causing loss of motorcycle control and an accident.

Note:

- **The riding mode will default to ROAD when the ignition is switched ON, if the OFF-ROAD or RIDER mode was active the last time the ignition was switched OFF with ABS or TC set to OFF-ROAD or OFF in either of those modes.**
- **Otherwise, the last selected riding mode will be remembered and activated when the ignition is switched ON.**
- **If the mode icons are not visible when the ignition switch is in the ON position, make sure that the engine stop switch is in the RUN position.**

Note:

- **If the battery is disconnected, then the RIDER mode settings will default back to the original factory settings.**

The current riding mode is shown in the upper left of the display screen.

To select a riding mode:

- Press and release the MODE button on the left hand switch housing to activate the riding mode selection tray at the bottom of the display screen.
- The currently active riding mode icon is highlighted with a blue background.

To change the selected riding mode:

- Either push the joystick left or right, or repeatedly press the MODE button until the required mode is in the centre of the display screen, highlighted with an arrow above it.
- A brief press of the joystick centre will select the required riding mode, and the icon in the upper left of the display screen will change.

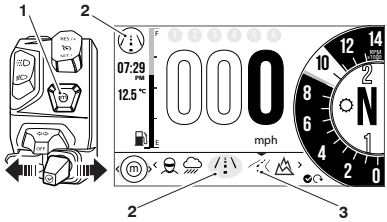

1. **MODE button**
2. **Current riding mode**
3. **New riding mode**

- Push the joystick left/right or press the MODE button to scroll through the riding mode options in the following order:
  - RIDER
  - RAIN
  - ROAD
  - SPORT
  - OFF-ROAD
  - OFF-ROAD PRO.

The selected mode is activated once the following conditions for switching modes have been met:

Motorcycle Stationary - Engine Off

- The ignition is switched ON
- The engine stop switch is in the RUN position.

Motorcycle Stationary - Engine Running

- Neutral gear is selected or the clutch is pulled in.

Motorcycle in Motion

Within 30 seconds of selecting a riding mode the rider must carry out the following simultaneously:

- Close the throttle
- Pull the clutch in
- Make sure that the brakes are not engaged (allow the motorcycle to coast).

Note:

- **It is not possible to switch into or out of OFF_ROAD or RIDER modes whilst the motorcycle is in motion, if the ABS or TC settings are set to OFF-ROAD or OFF in either of those modes.**
- **In this case, the motorcycle must be brought to a stop before the riding mode change can take place.**

If a riding mode change is not completed, the icon will alternate between the previous riding mode and the newly selected riding mode until the change is complete or it is cancelled.

The riding mode selection is now complete and normal riding can be resumed.

Information Tray

Warning

When the motorcycle is in motion, only attempt to switch between the information tray modes or reset the fuel information under the following conditions:

•At low speed

•In traffic free areas

•On straight and level roads or surfaces

•In good road and weather conditions.

Failure to observe this important warning could lead to loss of motorcycle control and an accident.

The information tray appears at the bottom of the display screen and allows easy access to different motorcycle status information.

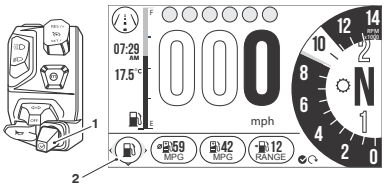

1. **Joystick control**
2. **Information tray**

To view the different information tray items, push the joystick left/right until the required information tray item is shown.

Note:

- **To access the information tray, the warning messages must first be acknowledged, see page 39.**

The information tray contains the following information tray items:

- Warnings and Information Messages, see page 39
- Fuel Information, see page 40
- Tyre Pressure Monitoring System (TPMS) (if fitted), see page 40
- Odometer, see page 41
- Service Interval Announcement, see page 41
- Screen Contrast, see page 42
- Style Options, see page 43
- Coolant Temperature, see page 43
- Screen Adjustment Height, see page 43
- Triumph Semi Active Suspension (TSAS), see page 41
- Trip Meter, see page 39

Different information tray items can be shown or hidden from the information tray. For further information, refer to page 54.

Warnings

Any warnings and information messages are shown in the Warnings tray. An example is shown below.

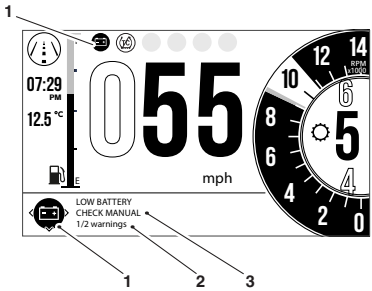

1. **Low battery warning**
2. **Warning counter**
3. **Warning description**

To view the warnings:

- Push the joystick left/right to scroll through the options until the warning review is shown.
- Push the joystick down/up to review each warning (if more than one). The warning counter will shown the amount of warnings that are present.
- Push the joystick left/right to return to the information tray.

Trip Meter

There are two trip meters that can be accessed and reset in the information tray.

Trip Meter Information Tray

To view a specific trip meter:

- Push the joystick left/right to scroll through the information tray items until Trip 1 meter is shown.
- Select TRIP 1 or TRIP 2 by pushing the joystick down/up.

Note:

- **TRIP 2 meter can be shown or hidden from the information tray. For more information, see page 52.**

To reset a trip meter:

- Select the trip meter to be reset.
- Press and hold the joystick centre for more than one second.
- The trip meter will then be reset.

The trip meter can also be reset from the Main menu, see page 51.

Fuel Status Information

The Fuel Status information tray shows fuel consumption information.

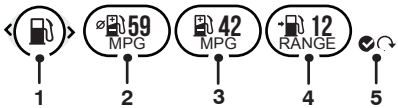

1. **Fuel information light**
2. **Average fuel consumption**
3. **Instantaneous fuel consumption**
4. **Range to empty**
5. **Reset**

Fuel Information Light

This light illuminates when the fuel level warning light is activated.

Average Fuel Consumption

This is an indication of the average fuel consumption. After being reset the display will show dashes until 0.1 miles/km has been covered.

Instantaneous Fuel Consumption

An indication of the fuel consumption at an instant in time. If the motorcycle is stationary, --.- will be shown in the display area.

Range to Empty

This is an indication of the predicted distance that can be travelled on the remaining fuel in the tank.

Reset

To reset the average fuel consumption, press and hold the joystick centre.

Note:

- **After refuelling, the fuel gauge and range to empty information will be updated only while riding the motorcycle. Depending on the riding style, updating could take up to five minutes.**

Tyre Pressure Monitoring System (TPMS) (if fitted)

The Tyre Pressure Monitoring System (TPMS) information tray item shows the front and rear tyre pressures and the TPMS warning light. For more information on TPMS, see page 114.

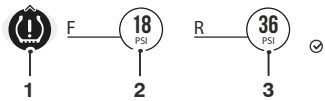

1. **TPMS warning light**
2. **Front tyre pressure display**
3. **Rear tyre pressure display**

TPMS Warning Light

The warning light will only illuminate when the front or rear tyre pressure is below the recommended pressure. It will not illuminate if the tyre is over inflated.

Warning

Stop the motorcycle if the Tyre Pressure Monitoring System (TPMS) warning light illuminates.

Do not ride the motorcycle until the tyres have been checked and the tyre pressures are at their recommended pressure when cold.

Front Tyre Pressure Display

This shows the current front tyre pressure.

Rear Tyre Pressure Display

This shows the current rear tyre pressure.

Odometer

The odometer shows the total distance that the motorcycle has travelled.

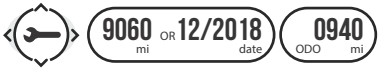

Odometer Information Tray

Service Interval Announcement

The Service Interval Announcement information tray shows the service symbol, the distance/days remaining before the next service and the current odometer reading.

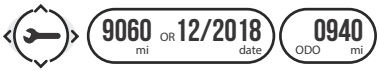

Service Interval Announcement Information Tray

For more information on service interval announcements, see page 33.

Triumph Semi Active Suspension (TSAS)

The Triumph Semi Active Suspension (TSAS) information tray item allows adjustment of the TSAS settings.

TSAS Information Tray (Showing SPORT Selected)

To adjust the TSAS settings:

- Push the joystick left/right to scroll through the options until the TSAS settings display is shown.
- Push the joystick centre to activate the TSAS adjustment mode.

Note:

- **If the riding modes link is disabled, changes made to the TSAS damping settings will remain active until further adjustment takes place, regardless of riding mode selection.**
- **If the riding modes link is enabled, any adjustments made to the TSAS damping settings will be saved to the currently active riding mode. The new TSAS settings will be automatically recalled whenever the riding mode is reselected. The riding mode's previous TSAS settings will be overwritten.**
- **If the riding modes link is enabled and a new riding mode is selected, the new riding mode's TSAS settings will automatically become active.**

- TSAS has nine damping settings ranging from COMFORT (soft) to SPORT (firm).
- Press and release the joystick centre allows individual selection of each of the nine settings.
- Press and hold the joystick control allows direct selection of the preset COMFORT, NORMAL and SPORT settings.
- There is a short time-out period to allow for further scrolling to take place. After the time-out period has elapsed, the selected damping setting will be automatically activated and the display will return to the home screen. Alternatively, press the joystick centre to confirm the setting and return to the home screen.

For more information on Triumph Semi Active Suspension (TSAS), see page 110.

Screen Contrast

The Screen Contrast information tray item allows the display screen contrast to be adjusted.

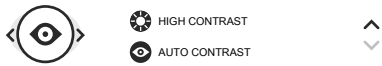

Screen Contrast Information Tray

There are two options available:

- HIGH CONTRAST - This option locks the display screen to the white background version of each display screen style for maximum visibility.
- AUTO CONTRAST - This option uses the instrument light sensor to adjust the contrast to the most suitable setting. In bright sunlight, low brightness settings will be overridden to make sure that the instruments can be viewed at all times.

To select an option:

- Push the joystick down/up to select either the HIGH CONTRAST or AUTO CONTRAST option and press the joystick centre to confirm.

If the rider defined brightness setting is suitable this will be used, see page 54.

Note:

- **Do not cover the light sensor on the display screen as this will stop the screen contrast from working correctly.**

Style Options

The Style Options information tray item allows a different style to be applied to the display screen.

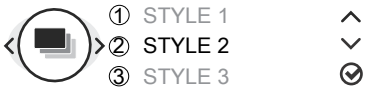

Style Options Information Tray (Style 2 Selected)

To change the display screen style:

- Push the joystick down/up to select the required style and then press the joystick centre to confirm.

Coolant Temperature

The Coolant Temperature information tray item indicates the temperature of the engine coolant.

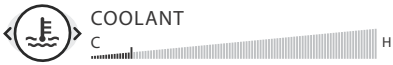

Coolant Temperature Information Tray

When the engine is started from cold the display will show grey bars. As the temperature increases more bars in the display will be shown illuminated. When the engine is started from hot the display will show the relevant number of illuminated bars, dependant on engine temperature.

The range is between C (cold) and H (hot) on the display.

With the engine running, if the engine coolant temperature becomes dangerously high, the high coolant temperature warning light on the display will be illuminated and the gauge will be shown in the information tray.

⚠ Caution

Stop the engine immediately if the high coolant temperature warning light illuminates. Do not restart the engine until the fault has been rectified.

Severe engine damage will result from running the engine when the high coolant temperature warning light is illuminated.

Windscreen Adjustment

The Windscreen Adjustment information tray option allows the windscreen height to be adjusted to an optimum setting.

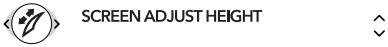

Windscreen Adjustment Mode

To adjust the windscreen height:

- Push the joystick left/right until the windscreen adjust option is highlighted.
- Push the joystick up/down to adjust the windscreen to the required height.
- Push the joystick left/right to access another tray item.

Main Menu

To access the Main menu:

- The motorcycle must be stationary with the ignition switched on.
- Press the HOME button on the right handlebar switch housing.
- Scroll the Main menu by pushing the joystick down/up until the required option is selected and then press the joystick centre to confirm.

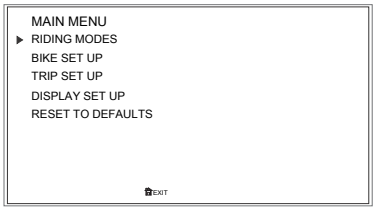

Main Menu Screen

The Main menu allows access to the following options:

Riding Modes

This menu allows configuration of the riding modes. For more information, see page 46.

Bike Set Up

This menu allows configuration of the following different features of the motorcycle. For more information, see page 47.

Trip Set Up

This menu allows configuration of Trip 1 and Trip 2. For more information, see page 51.

Display Set Up

This menu allows configuration of the display options. For more information, see page 53.

Reset to Defaults

This menu allows all instrument settings to be returned to the default setting. For more information, see page 57.

Riding Modes Menu

The Riding Modes menu allows configuration of the riding modes.

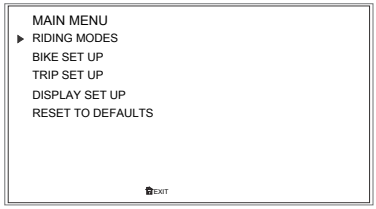

To access the Riding Modes menu:

- Press the HOME button to display the Main menu.
- Push the joystick down and then press the joystick centre to select RIDING MODES.

The following model specific options are available:

- Rider
- Rain
- Road
- Sport
- Off-Road
- Off-Road Pro
- Reset To Defaults.

Riding Modes

To change the riding modes settings:

- From the Riding Modes menu, push the joystick down/up to select a specific riding mode and press the joystick centre to confirm.

MAIN MENU	RIDING MODES
RIDING MODES	▶ RIDER
BIKE SET UP	RAIN
TRIP SET UP	ROAD
DISPLAY SET UP	SPORT
RESET TO DEFAULTS	OFF-ROAD
	OFF-ROAD PRO
	RESET ALL TO DEFAULTS
	EXIT

- Push the joystick down/up until the required setting option is selected and press the joystick centre to confirm.

RIDING MODES	RIDER
RIDER	▶ ABS SETTING
RAIN	MAP SETTING
ROAD	TC SETTING
SPORT	RESET TO DEFAULTS
OFF-ROAD	
OFF-ROAD PRO	
RESET ALL TO DEFAULTS	
	EXIT

- Push the joystick down/up until the required option is selected and press the joystick centre to confirm.

RIDER	ABS SETTING
ABS SETTING	OFF
MAP SETTING	▶ ROAD ✓
TC SETTING	OFF-ROAD
RESET TO DEFAULTS	
	EXIT

Riding Mode Configuration

Refer to the following table for the ABS, MAP and TC options available for each riding mode.

Riding Mode						
	RIDER	RAIN	ROAD	SPORT	OFF-ROAD	OFF-ROAD PRO
ABS (Anti-lock Braking System)						
Road	●	●	●	●	⊘	
Off-Road[1]	○	⊘	⊘	⊘	●	○
Off	○	Via Menu	Via Menu	Via Menu	○	●
MAP (Throttle Response)						
Rain	○	●	○	⊘	○	○
Road	●	○	●	○	○	○
Sport[1]	○	⊘	○	●	○	○
Off-Road[1]	○	⊘	⊘	⊘	●	●
TC (Traction Control)						
Rain	○	●	○	⊘	⊘	⊘
Road	●	○	●	○	⊘	⊘
Sport[1]	○	⊘	○	●	○	⊘
Off-Road[1]	○	⊘	⊘	⊘	●	○
Off	○	Via Menu	Via Menu	Via Menu	○	●
[1] Model Specific						
Key						
●		Standard (Factory Default Setting)				
○		Selectable Option				
⊘		Option Not Available				

Bike Set Up Menu

The Bike Set Up menu allows configuration of the different features of the motorcycle.

MAIN MENU	BIKE SET UP
RIDING MODES	▶ TSAS
BIKE SET UP	TRIUMPH SHIFT ASSIST
TRIP SET UP	HILL HOLD
DISPLAY SET UP	INDICATORS
RESET TO DEFAULTS	ABS
	TC
	SERVICE
	EXIT

To access the Bike Set Up menu:

- Press the HOME button to display the Main menu.
- Push the joystick down and then press the joystick centre to select BIKE SET UP.

The options available are:

- Triumph Semi Active Suspension (TSAS)
- Triumph Shift Assist
- Hill Hold
- Direction Indicators
- Anti-Lock Braking System (ABS)
- Traction Control (TC)
- Service.

Bike Set Up - TSAS

The Triumph Semi-Active Suspension System (TSAS) controls adjustment of the front and rear suspension damping and automatic rear suspension preload settings. For more information on TSAS, see **page 110**.

BIKE SET UP	TSAS
TSAS	▶ RIDING MODES LINK
TRIUMPH SHIFT ASSIST	MODE
HILL HOLD	SETTING (ON-ROAD)
INDICATORS	SETTING (OFF-ROAD)
ABS	
TC	
SERVICE	
	EXIT

Riding Modes Link

The riding modes link allows you to enable or disable the link between TSAS and the riding modes.

If the riding modes link is disabled, changes made to the TSAS damping settings will remain active until further adjustment takes place, regardless of riding mode selection.

If the riding modes link is enabled, any adjustments made to the TSAS damping settings will be saved to the currently active riding mode. The new TSAS settings will be automatically recalled whenever the riding mode is reselected. The riding mode's previous TSAS settings will be overwritten.

If the riding modes link is enabled and a new riding mode is selected, the new riding mode's TSAS settings will automatically become active.

To disable or enable the TSAS riding modes link:

- Press the joystick centre to select RIDING MODES LINK.
- Push the joystick down/up to scroll between DISABLED and ENABLED.
- Press the joystick centre to select the required option.

Mode

This allows the adjustment of the settings from soft to hard by adjusting the rebound and compression damping settings.

Selecting AUTO sets the TSAS system to automatically detect the type of surface being ridden on (road or off-road) and will adjust the rebound and compression damping settings accordingly.

Setting On-Road

This applies the optimal TSAS settings for on-road use and adjusts the rebound and compression damping settings accordingly.

Setting Off-Road

This applies the optimal TSAS settings for off-road use and adjusts the rebound and compression damping settings accordingly.

Bike Set Up - Triumph Shift Assist (if fitted)

Triumph Shift Assist triggers a momentary engine cut to allow gears to engage, without closure of the throttle or operation of the clutch. This feature works for both up-changes and down-changes of gear.

The clutch must be used for stopping and pulling away.

Triumph Shift Assist will not operate if the clutch is applied or if an up-change is attempted by mistake when in 6th gear.

It is necessary to use a positive pedal force to make sure there is a smooth gear change.

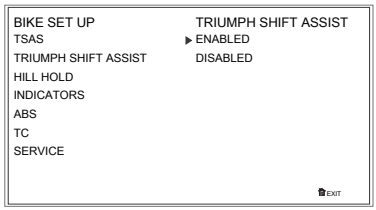

To enable/disable Triumph Shift Assist:

- From the Bike Set Up menu, push the joystick down to select TRIUMPH SHIFT ASSIST and press the joystick to confirm.
- Push the joystick down/up to scroll between ENABLED and DISABLED.
- Press the joystick centre to confirm the required selection.
- The display will then return to the BIKE SET UP menu.

Bike Set Up - Hill Hold Control (if fitted)

Hill hold control assists in making hill starts. The system (when activated) will apply the rear brake to hold the motorcycle in position. The system will then automatically deactivate and release the rear brake when it detects that the motorcycle is attempting to move off.

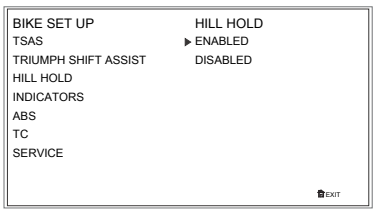

To enable/disable hill hold control:

- From the Bike Set Up menu, push the joystick down to select HILL HOLD and press the joystick centre to confirm.
- Push the joystick down to select either ENABLED or DISABLED.
- Press the joystick centre to confirm the required selection.
- The display will then return to the Bike Set Up menu.

For more information on hill hold control, see **page 157**.

Bike Set Up - Direction Indicators

The direction indicators can be set to Auto Basic, Auto Advanced or Manual mode.

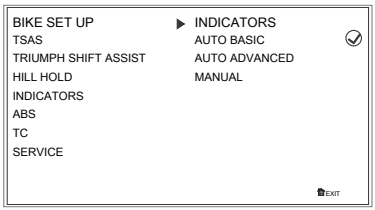

Selecting a Direction Indicators Mode

To select the required direction indicators mode:

- From the Bike Set Up menu, push the joystick down to select INDICATORS and press the joystick centre to confirm.
- Push the joystick down/up to scroll between AUTO BASIC, AUTO ADVANCED and MANUAL.
  - **Auto Basic** - The self-cancelling function is on. The direction indicators will activate for eight seconds and an additional 65 metres.
  - **Auto Advanced** - The self-cancelling function is on. A quick short press activates the direction indicators for three flashes. A longer press activates the direction indicators for eight seconds and an additional 65 metres.

- **Manual** - The self-cancelling function is off. The direction indicators must be manually cancelled using the direction indicator switch.

- Press the joystick centre to confirm the required selection.
- The display will then return to the Bike Set Up menu.

Bike Set Up - ABS

It is possible to temporarily disable the ABS. The ABS cannot be permanently disabled, it will be automatically enabled when the ignition is turned off and then on again, or if the default riding mode is activated by a long press of the MODE button.

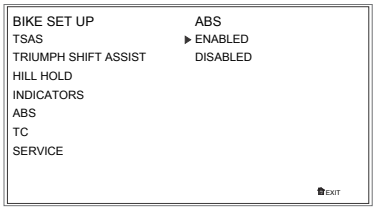

To select the required option:

- From the Bike Set Up menu, push the joystick down to select ABS and press the joystick centre to confirm.
- Push the joystick down/up to scroll between ENABLED and DISABLED.
- Press the joystick centre to confirm the required selection.
- The display will then return to the Bike Set Up menu.

Bike Set Up - Traction Control (TC)

It is possible to temporarily disable the traction control system. The traction control cannot be permanently disabled, it will be automatically enabled when the ignition is turned off and then on again, or if the default riding mode is activated by a long press of the MODE button.

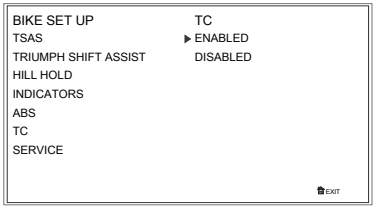

To select the required option:

- From the Bike Set Up menu, push the joystick down to select TC and press the joystick centre to confirm.
- Push the joystick down/up to scroll between ENABLED and DISABLED.
- Press the joystick centre to select the required option.

The display will then return to the BIKE SET UP display.

Bike Set Up - Service

The service interval is set to a distance and/or time period.

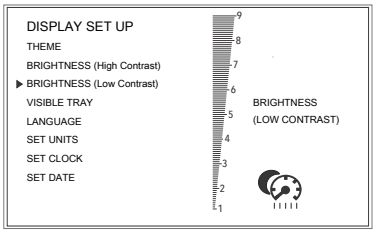

To review the service interval:

- From the Bike Set Up menu, push the joystick down to select SERVICE and press the joystick centre to confirm.
- Press the joystick centre to display the SERVICE information.
- Selecting RESET allows you to reset the standard time and distance, and also any custom times and distances.
- The display will then return to the Bike Set Up menu.

Trip Setup

The Trip Set Up menu allows configuration of the trip meters. Each trip meter can be configured to be reset either manually or automatically. The setup procedure is the same for both trip meters.

To access the Trip Set Up menu:

- Press the HOME button to display the Main menu.
- Push the joystick down and then press the joystick centre to select TRIP SET UP.

The options available are:

- TRIP 1 RESET
- TRIP 2 RESET
- TRIP 2 DISPLAY

Trip Setup - Manual Reset

Manual reset of the trip meters will only reset the selected trip meter when the rider chooses to do so.

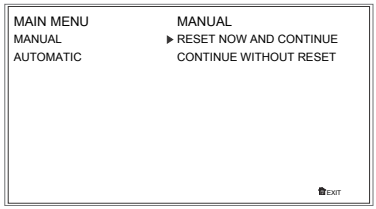

To set the trip meter to reset manually:

- Push the HOME button to display the MAIN MENU.
- Push the joystick down and then press the joystick centre to select TRIP SETUP.
- Push the joystick down and then press the joystick centre to select TRIP 1 RESET or TRIP 2 RESET.
- Push the joystick centre to select MANUAL.

  There are two options:

  - RESET NOW AND CONTINUE - Resets all trip meter data in the relevant trip meter, and the trip meter will only reset when manually done so by the rider.
  - CONTINUE WITHOUT RESET - The trip meter will not be reset. The trip meter will only reset when manually done so by the rider.
- Press the joystick centre to confirm the selection and return to the previous menu.

Trip Setup - Automatic Reset

Automatic reset will reset each trip meter after the ignition has been switched off for a set time.

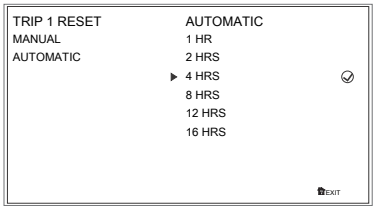

To set the trip meters to reset automatically:

- Push the HOME button to display the MAIN MENU.
- Push the joystick down and then press the joystick centre to select TRIP SETUP.
- Push the joystick down/up and then press the joystick centre to select TRIP 1 RESET or TRIP 2 RESET.
- Push the joystick down/up and select AUTOMATIC and then press the joystick centre.
- Push the joystick down/up to select the timer setting and press the joystick centre to confirm the required time limit. The required time limit is then stored in the trip memory.

When the ignition is turned off, the trip meter is set to zero when the time period has elapsed.

The following table shows two examples of the automatic trip reset functionality.

Ignition Turned Off	Selected Time Delay	Trip Meter Resets to Zero
10:30 hrs	4 HRS	14:30 hrs
18:00 hrs	16 HRS	10:00 hrs (next day)

Trip 2 Enable/Disable

Trip 2 meter can be enabled or disabled. If Trip 2 is disabled it will no longer be shown in the information tray.

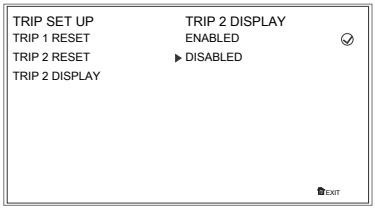

To enable or disable the Trip 2 meter:

- Push the MODE button to display the MAIN MENU.
- Push the joystick down to select TRIP SET UP.
- Push the joystick centre to display the TRIP SET UP menu.
- Push the joystick down/up to scroll to the TRIP 2 DISPLAY and press the joystick centre.
- Push the joystick down/up to scroll between ENABLED and DISABLED and press the joystick centre.

Display Set Up Menu

The Display Set Up menu allows configuration of the different display screen options.

MAIN MENU	DISPLAY SET UP
RIDING MODES	▶ THEME
BIKE SET UP	BRIGHTNESS (High Contrast)
TRIP SET UP	BRIGHTNESS (Low Contrast)
DISPLAY SET UP	VISIBLE TRAY
RESET TO DEFAULTS	LANGUAGE
	SET UNITS
	SET CLOCK
	SET DATE
	EXIT

To access the Display Set Up menu:

- Press the HOME button to display the Main menu.
- Push the joystick down and then press the joystick centre to select DISPLAY SET UP.

The following options are available:

- Styles and Themes
- Brightness
- Visible Tray
- Shift Indicator
- Language
- Set Units
- Set Clock
- Set Date.

Display Set Up - Styles and Themes

Note:

- **Themes are only available on Tiger 1200 XRT and Tiger 1200 XCA.**

THEME	THEME	
THEME 1	AUTO	
THEME 2	▶ STYLE 1	✓
	STYLE 2	
	STYLE 3	
	EXIT	

Theme and Style Menu Example

DISPLAY SET UP	STYLE	
STYLE	AUTO	
	▶ STYLE 1	✓
	STYLE 2	
	STYLE 3	
	EXIT	

Style Menu Example

To select a style or theme:

- From the Display Set Up menu, push the joystick down to select the STYLES or THEME (if fitted) menu.
  - **Tiger 1200 XRT and Tiger 1200 XCA**: Push the joystick down/up to scroll between the THEMES.
  - Press the joystick centre to confirm the selected THEME.
  - **All Models**: Push the joystick down/up to scroll between the STYLES.

- Press the joystick centre to confirm the selected STYLE.

- The new style or theme will be saved. Press the HOME button to exit.

Note:

- **Selecting AUTO will prevent a style tray from being displayed. The style is changed with riding modes.**

Display Set Up - Brightness

The brightness feature allows the screen's brightness contrast to be changed for day time and night time riding.

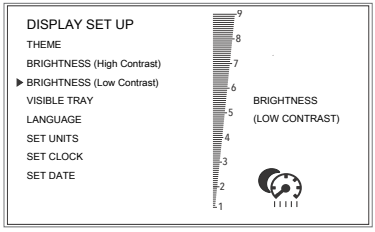

BRIGHTNESS (LOW CONTRAST) Shown

There are two brightness options to choose:

- High contrast (day time mode)
- Low contrast (night time mode)

To change the brightness level:

- From the Display Set Up menu, push the joystick down to select BRIGHTNESS and press the joystick centre to confirm.
- Push the joystick down to select BRIGHTNESS (High Contrast) or BRIGHTNESS (Low Contrast) menu.
- Press the joystick centre to select the required menu.
- Push the joystick down/up to adjust the brightness.
- Press the joystick centre to confirm the required level of brightness.
- Press the HOME button to return to the main display.

Note:

- **In bright sunlight, low brightness settings will be overridden to make sure that the instruments can be viewed at all times.**

Display Set Up - Visible Tray

The Visible Tray feature allows the selection of required information tray items to be shown in the information tray.

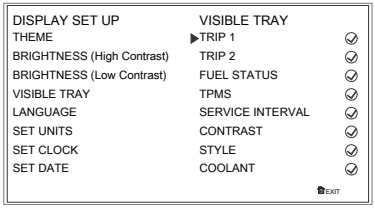

To select the Visible Tray menu:

- From the Display Set Up menu, push the joystick down to select VISIBLE TRAY and press the joystick centre to confirm.
- Push the joystick down/up until the required instrument tray item is selected.
- Press the joystick centre to select/deselect the information tray item.

  An information tray item with a tick next to it will be shown in the tray. An information tray item without a tick next to it will not be shown in the tray.

Display Set Up - Language

There are several different languages that can be selected to be shown in the display screen.

To select a different language:

- From the Display Set Up menu, push the joystick down to select LANGUAGE and press the joystick centre to confirm.
- Push the joystick down/up until the required language is selected.
- Press the joystick centre to select/deselect the required language.

Display Set Up - Set Units

There are different units of measurement options that can be shown in the display screen.

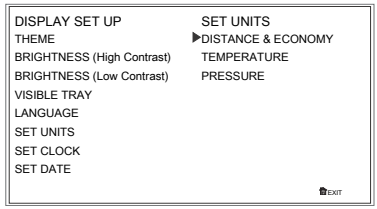

To select the units of measurement required:

- From the Display Set Up menu, push the joystick down to select SET UNITS and press the joystick centre to confirm.
- Push the joystick down/up to select the required unit; DISTANCE & ECONOMY, TEMPERATURE or PRESSURE.
- Push the joystick down/up to select the required unit of measurement from the following options:
  - **DISTANCE & ECONOMY:**
  - MILES & MPG (UK)
  - MILES & MPG (US)
  - KM & L/100KM
  - KM & KM/L
  - **TEMPERATURE:**
  - °C
  - °F
  - **PRESSURE:**
  - PSI
  - BAR
  - KPa
- Press the joystick centre to confirm.

Display Set Up - Set Clock

This function allows the adjustment of the clock.

To set the clock:

- From the Display Set Up menu, push the joystick down to select SET CLOCK and press the joystick centre to confirm.
- Push the joystick down/up to select between either 12 HR or 24 HR clock and press the joystick centre to confirm selection. The clock will display in either 12 or 24 hour format. Once the clock format is set the display will return to the SET CLOCK menu.

To set the time, push the joystick down/up to select HOUR or MINUTE.

To Adjust the Hour Setting

- Select HOUR on the display and press the joystick centre, a tick will appear next to HOUR and the hour display will flash as shown below.
- Push the joystick down/up to set the hour and press the joystick centre to confirm.

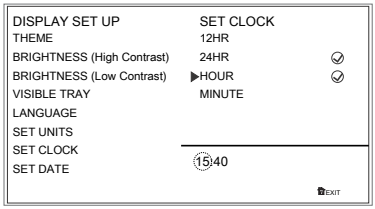

To Adjust the Minute Setting

- Select MINUTE on the display and press the joystick centre, a tick will appear next to MINUTE and the minute display will flash as shown below.
- Push the joystick down/up to set the minute and press the joystick centre to confirm.

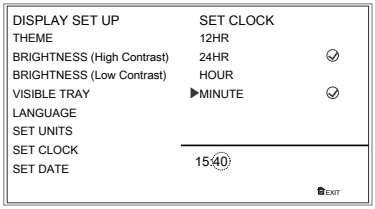

Display Set Up - Set Date

This function allows the adjustment of the date and date format.

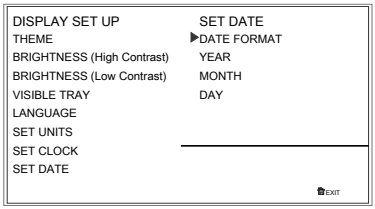

To set the date format:

- From the Display Set Up menu, push the joystick down to select SET DATE and press the joystick centre to confirm.
- Press the joystick centre to display DATE FORMAT.
- Push the joystick down/up to select either of the DD-MM-YYYY, MM-DD-YYYY or YYYY-MM-DD formats and press the joystick centre to confirm selection. Once the date format is set the display will return to the SET DATE menu.

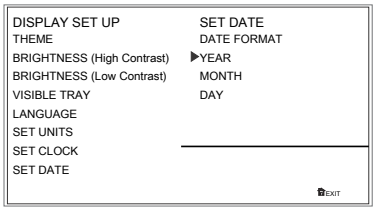

To set the date, push the joystick down/up to select the DAY, MONTH and YEAR.

- Select YEAR and then press the joystick centre, a tick will appear next to the YEAR and the YEAR display will flash.
- Push the joystick down/up to set the current year and then press the joystick centre to confirm.
- To set the MONTH and DAY repeat the procedure used to set the year. Once the date is set the display will return to the SET DATE menu.

Reset to Defaults

This function allows the main menu display items to be reset to the default setting.

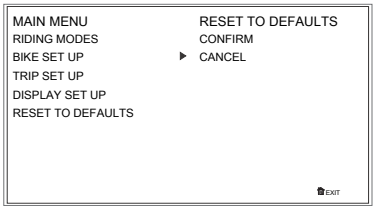

To reset the Main menu display items:

- From the Main menu, push the joystick down and select RESET TO DEFAULTS.
- Press the joystick centre to confirm.
- Pushing the joystick down/up, select CONFIRM or CANCEL from the Reset to Defaults menu, and press the joystick centre to confirm.
- **Confirm** - The following main menu settings and data will be reset to the factory default values - Riding Modes, Indicator Set Up, Trip Computers, Visible Trays, Language, ABS, Traction Control, Style, and Display Brightness.
- **Cancel** - The main menu settings and data will remain unchanged and the display will return to the previous level.

Instrument Panel Position Adjustment

Warning

Operation of the motorcycle with an incorrectly adjusted instrument panel is dangerous.

An incorrectly adjusted instrument panel will result in loss of instrument vision when riding and may cause a distraction leading to loss of control of the motorcycle and an accident.

Always adjust the instrument panel to provide sufficient vision of the instruments before riding the motorcycle.

Warning

Never attempt to clean or adjust the instrument panel while riding the motorcycle. Removal of the rider's hands from the handlebars while riding the motorcycle will diminish the ability of the rider to maintain control of the motorcycle.

Attempting to clean or adjust the instrument panel while riding the motorcycle may result in loss of control of the motorcycle and an accident.

Only attempt to clean or adjust the instrument panel while stationary.

Caution

Do not press directly onto the instrument panel display screen.

Only adjust the position of the instrument panel using the adjustment handle.

Pressing directly on the instrument panel display screen may damage the instrument panel.

The instrument panel can be adjusted to allow for improved visibility of the display screen.

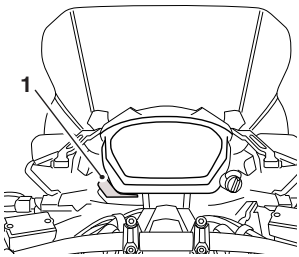

1. **Adjustment handle**

To adjust the instrument panel:

Note:

- **Moderate force using the thumb and finger is required to adjust the position of the instrument panel.**

Position the instrument panel to allow an unobstructed view of the display screen using the adjustment handle.

Liquid Crystal Display (LCD) Instrument Display

Table of Contents

Instrument Panel Layout 60
Warning Lights 61
Warning and Information Messages 67
Tachometer 68
Motorcycle Status Display Screen 69
Multifunction Display Screen 73
Settings Menu 77
Riding Modes 83

Instrument Panel Layout

The LCD instrument display is only fitted on the Tiger 1200 XR model.

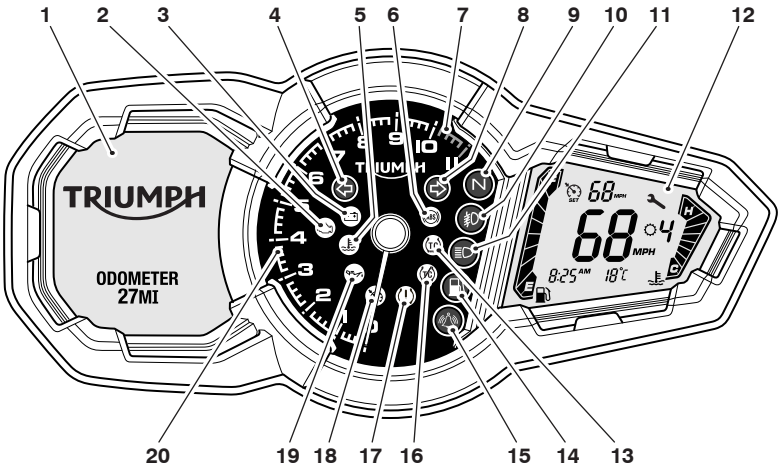

cisz

1. Multifunction display screen
2. Engine management Malfunction Indicator Light (MIL)
3. Battery warning light
4. Left hand direction indicator light
5. High coolant temperature warning light
6. ABS warning light
7. Tachometer red zone
8. Right hand direction indicator light
9. Neutral indicator light
10. Fog lights indicator light
11. High beam indicator light
12. Motorcycle status display screen
13. Traction control indicator light
14. Low fuel level indicator light
15. Alarm/immobiliser status indicator light (alarm is an accessory kit)
16. Traction control disabled warning light
17. Tyre pressure warning light (if Tyre Pressure Monitoring System (TPMS) is fitted)
18. Cruise control light
19. Low oil pressure warning light
20. Tachometer

Warning Lights

Note:

- **When the ignition is switched on, the instrument warning lights will illuminate for 1.5 seconds and will then go off (except those which remain on until the engine starts, as described in the following pages).**

Engine Management System Malfunction Indicator Light (MIL)

The Malfunction Indicator Light (MIL) for the engine management system illuminates when the ignition is switched ON (to indicate that it is working) but should not become illuminated when the engine is running.

If the MIL becomes illuminated when the engine is running, this indicates that a fault has occurred in one or more of the systems controlled by the engine management system. In such circumstances, the engine management system will switch to 'limp-home' mode so that the journey may be completed, if the fault is not so severe that the engine will not run.

Warning

Reduce speed and do not continue to ride for longer than is necessary with the MIL illuminated. The fault may adversely affect engine performance, exhaust emissions and fuel consumption. Reduced engine performance could cause a dangerous

Warning Continued

riding condition, leading to loss of control and an accident. Contact an authorised Triumph dealer as soon as possible to have the fault checked and rectified.

Note:

- **If the MIL flashes when the ignition is switched ON contact an authorised Triumph dealer as soon as possible to have the situation rectified. In these circumstances the engine will not start.**

Low Oil Pressure Warning Light

With the engine running, if the engine oil pressure becomes dangerously low, the low oil pressure warning light in the tachometer will illuminate and WARNING - OIL PRESSURE LOW will be displayed in the multifunction display screen.

Caution

Stop the engine immediately if the low oil pressure warning light illuminates. Do not restart the engine until the fault has been rectified.

Severe engine damage will result from running the engine when the low oil pressure warning light is illuminated.

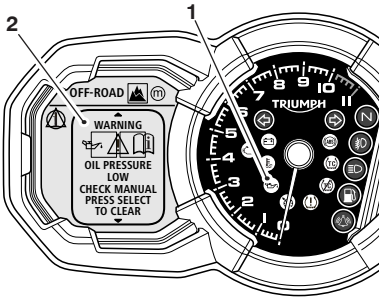

1. **Low oil pressure warning light**
2. **Instrument message**

The low oil pressure warning light in the tachometer will illuminate if the ignition is switched on without running the engine.

High Coolant Temperature Warning Light

With the engine running, if the engine coolant temperature becomes dangerously high, the high coolant temperature warning light will illuminate.

Caution

Stop the engine immediately if the high coolant temperature warning light illuminates. Do not restart the engine until the fault has been rectified.

Severe engine damage will result from running the engine when the high coolant temperature warning light is illuminated.

Immobiliser/Alarm Indicator Light

This Triumph motorcycle is fitted with an engine immobiliser which is activated when the ignition switch is turned to the OFF position.

Without Alarm Fitted

When the ignition switch is turned to the OFF position, the immobiliser/alarm light will flash on and off for 24 hours to show that the engine immobiliser is on. When the ignition switch is turned to the ON position the immobiliser and the indicator light will be off.

If the indicator light remains on it indicates that the immobiliser has a malfunction that requires investigation. Contact an authorised Triumph dealer as soon as possible to have the fault checked and rectified.

With Alarm Fitted

The immobiliser/alarm light will only illuminate when the conditions described in the genuine Triumph accessory alarm instructions are met.

ABS (Anti-Lock Brake System) Warning Light

When the ignition switch is turned to the ON position, it is normal that the ABS warning light will flash on and off. The light will continue to flash after engine start-up until the motorcycle first reaches a speed exceeding 6 mph (10 km/h) when it will go off.

The warning light should not illuminate again until the engine is restarted unless there is a fault, or:

- ABS is disabled by the rider - the warning light will remain illuminated (see Bike Setup on page 79 or Riding Mode Configuration on page 87).
- ABS is set to Off-Road – the warning light will flash slowly (see Riding Mode Configuration on page 87).

Note:

- **Traction control and cruise control may not function if there is a malfunction with the ABS system. In this situation, the warning lights for the ABS, traction control and the MIL may be illuminated.**

If the warning light becomes illuminated at any other time while riding it indicates that the ABS has a malfunction that requires investigation. The following warning message may be displayed:

- WARNING - ABS SYSTEM DISABLED

The braking system will be affected as follows:

WARNING - ABS SYSTEM DISABLED

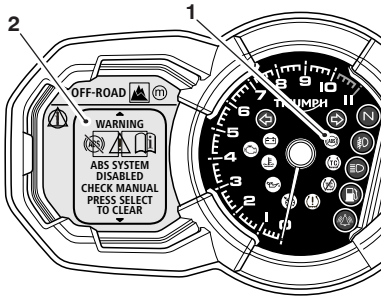

1. **ABS warning light**
2. **Instrument message**

The message WARNING - ABS SYSTEM DISABLED indicates that the ABS is not functioning.

Warning

If the ABS is not functioning or has been disabled by the rider (see Bike Setup on **page 79** or Riding Mode Configuration on **page 87**), the brake system will continue to function as a non-ABS braking system.

Do not continue to ride for longer than is necessary with the warning light illuminated. In the event of a fault, contact an authorised Triumph dealer as soon as possible to have the fault checked and rectified.

In this situation, braking too hard will cause the wheels to lock resulting in loss of motorcycle control and an accident.

See also Braking on **page 151**.

Traction Control (TC) Indicator Light

The TC indicator light is used to indicate that the TC system is active and is working to limit rear wheel slip during periods of hard acceleration or under wet or slippery road conditions.

TC Indicator Light Operation:

TC Switched On (Rain, Road or Sport Settings):

- Under normal riding conditions the indicator light will remain off.
- The indicator light will flash rapidly when the TC system is working to limit rear wheel slip during periods of hard acceleration or under wet or slippery road conditions.

TC Switched On (Off-Road Setting):

- Under normal riding conditions, the indicator light will flash slowly to indicate that the TC system is set to Off-Road.
- The TC indicator light will flash rapidly when the TC system is working to limit rear wheel slip during periods of hard acceleration or under wet or slippery conditions.

TC Switched Off:

The indicator light will not illuminate. Instead the TC disabled warning light will be illuminated.

Note:

- **Traction control may not function if there is a malfunction with the ABS system. In this situation, the warning lights for the ABS, TC and the MIL may be illuminated.**

Traction Control (TC) Disabled Warning Light

The TC disabled warning light should not illuminate unless TC is disabled by the rider (see Bike Setup on **page 79** or Riding Mode Configuration on **page 87**).

If the warning light becomes illuminated at any other time while riding, it indicates that the TC system has a malfunction that requires investigation. The following warning message may be displayed:

- WARNING - TC SYSTEM DISABLED

The TC system will be affected as follows:

The message WARNING - TC SYSTEM DISABLED indicates that the traction control system is not functioning.

Warning

If the Traction Control (TC) system is not functioning, care must be taken when accelerating and cornering on wet/slippery road surfaces to avoid rear wheel spin.

In the event of a fault, the TC disabled warning light may be accompanied by the engine management system malfunction indicator light and/or the ABS warning light.

Do not continue to ride for longer than is necessary with any of the above warning lights illuminated. Contact an authorised Triumph dealer as soon as possible to have the fault checked and rectified.

Hard acceleration and cornering in this situation may cause the rear wheel to spin resulting in loss of motorcycle control and an accident.

Cruise Control Light

The cruise control can only be activated when the motorcycle is travelling at a speed between 19 to 100 mph (30 to 160 km/h) and is in 3 rd gear or higher. When activated, the cruise control light in the tachometer will be illuminated (see **page 107**).

Warning

Cruise control must only be used where you can ride safely at a steady speed.

Cruise control should not be used when riding in heavy traffic, on roads with sharp/blind bends or when they are slippery.

Using cruise control in heavy traffic, on roads with sharp/blind bends or when they are slippery, may result in loss of motorcycle control and an accident.

Direction Indicators

When the indicator switch is turned to the left or right, the indicator warning light will flash on and off at the same speed as the direction indicators.

High Beam Switch

When the ignition is switched ON and the headlight dip switch is set to HIGH BEAM, the high beam warning light will illuminate.

Fog Lights (if fitted)

When the ignition is switched on and the fog lights are switched on, the fog lights warning light will illuminate.

Low Fuel Warning Light

The low fuel warning light will illuminate when there are approximately 3.5 litres of fuel remaining in the tank.

Neutral

N

The neutral warning light indicates when the transmission is in neutral (no gear selected). The warning light will illuminate when the transmission is in neutral with the ignition switch in the ON position.

Battery Warning Light

When the ignition is switched on, the battery warning light will only illuminate if a fault is recognised with the battery.

With the engine running, if the battery voltage becomes low, the battery warning light in the tachometer will illuminate and the message WARNING - BATTERY LOW will also be shown in the multifunction display screen.

Once the battery is fully charged the warning light will go out and the instrument message will be deactivated.

If the battery warning light remains on it indicates that there is a malfunction that requires investigation. Contact an authorised Triumph dealer as soon as possible to have the fault checked and rectified.

Tyre Pressure Warning Light (if TPMS is fitted)

The tyre pressure warning light works in conjunction with the Tyre Pressure Monitoring System (TPMS) (see page 114).

The warning light will only illuminate when the front or rear tyre pressure is below the recommended pressure. It will not illuminate if the tyre is over inflated.

When the warning light is illuminated, the message TPMS - FRONT/REAR TYRE LOW PRESSURE will be shown in the multifunction display screen.

Press the SELECT button to acknowledge the message and return to the home screen.

After pressing the SELECT button, the tyre pressures display will be automatically shown in the motorcycle information section of the home screen.

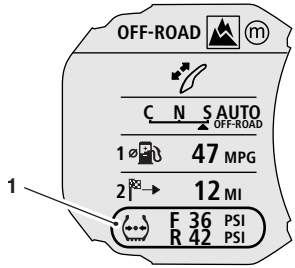

1. **Tyre pressures display**

The tyre pressure at which the warning light illuminates is temperature compensated to 20°C but the numeric pressure display associated with it is not (see page 114). Even if the numeric

display seems at or close to the standard tyre pressure when the warning light is on, a low tyre pressure is indicated and a puncture is the most likely cause.

Warning

Stop the motorcycle if the tyre pressure warning light illuminates and the message TPMS - FRONT/REAR TYRE LOW PRESSURE is displayed.

Do not ride the motorcycle until the tyres have been checked and the tyre pressures are at their recommended pressure when cold.

Frost Warning Light

Warning

Black ice (sometimes called clear ice) can form at temperatures several degrees above freezing (0°C (32°F)), especially on bridges and in shaded areas.

Always take extra care when the temperatures are low and reduce speed in potentially hazardous driving conditions such as bad weather.

Excess speed, hard acceleration, heavy braking or hard cornering when roads are slippery may result in loss of motorcycle control and an accident.

The frost warning light illuminates if the ambient air temperature is 4°C (39°F) or lower.

The frost warning light will remain illuminated until the temperature rises to 6°C (42°F).

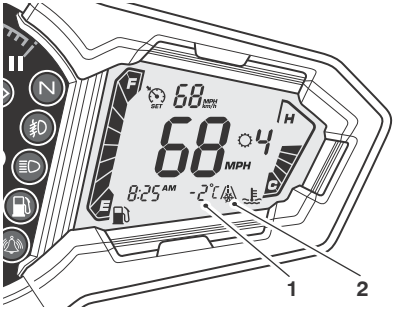

1. **Ambient air temperature**
2. **Frost symbol**

Warning and Information Messages

Warning Messages

The following warning messages may be displayed if a fault is detected:

- OIL PRESSURE LOW (see **page 61**)
- BATTERY LOW (see **page 66**)
- ABS SYSTEM DISABLED (see **page 63**)
- TC SYSTEM DISABLED (see **page 64**)
- FRONT/REAR TYRE PRESSURE LOW (see **page 66**)
- SENSOR SIGNAL FRONT/REAR TYRE (see **page 114**).

Information Messages

The following information message may be displayed:

- TPMS - BATTERY LOW FRONT/ REAR TYRE (see page 66)

When a warning or information message is activated, the message will be accompanied by the relevant warning or information symbol on the left hand side of the multifunction display.

It is possible for multiple warning and information messages to be displayed when a fault occurs. Where this is the case, warning messages will take priority over information messages and the warning symbol will be displayed on the left hand side of the multifunction display.

The number of currently active warning and information messages is displayed over the warning/information symbol.

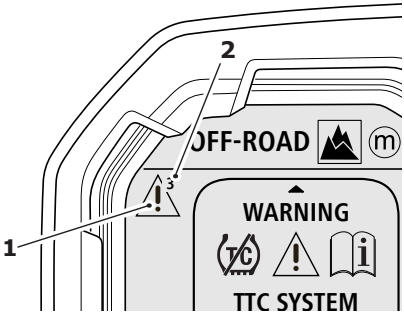

1. **Symbol (warning symbol shown)**
2. **Multiple messages indicated**

Use the SCROLL button to scroll through the messages being displayed.

Press the SELECT button to acknowledge and hide each message.

Note:

- **Some messages are automatically hidden after a short period.**
- **Hidden warning and information messages remain active and will be redisplayed each time the ignition is switched on, until the condition that triggered the message has been rectified.**
- **The warning or information symbol will remain visible in the multifunction display while active messages are hidden, along with the number of hidden messages.**
- **Hidden warning or information messages can be viewed using the Show Warnings function as described in the Settings Menu on page 77.**

Tachometer

Caution

Never allow engine speed to enter the red zone as severe engine damage may result.

The tachometer shows the engine speed in revolutions per minute - rpm (r/min). At the end of the tachometer range there is the red zone.

Engine speeds in the red zone are above maximum recommended engine speed and are also above the range for best performance.

Motorcycle Status Display Screen

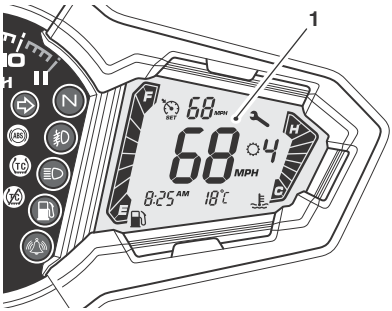

1. **Motorcycle status display screen**

The motorcycle status display screen is used to display the following:

- Speedometer
- Fuel gauge
- Coolant temperature gauge
- Gear position display
- Cruise control set speed
- Service indicator
- Clock
- Ambient air temperature and frost symbol.

Speedometer

The digital speedometer indicates the road speed of the motorcycle. The read-out displays the motorcycle road speed in increments of one mile (or kilometre) per hour.

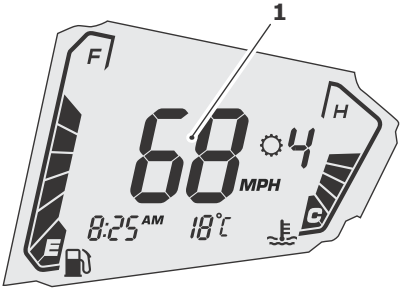

1. **Speedometer**

Fuel Gauge

The fuel gauge indicates the amount of fuel in the tank.

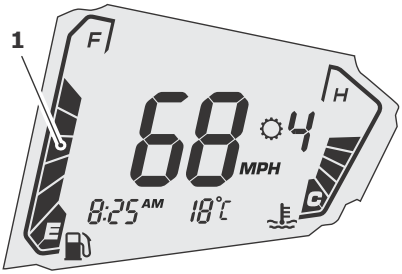

1. **Fuel gauge**

With the ignition switched on, the number of bars shown in the display indicates the level of fuel.

When the fuel tank is full all eight bars are displayed and when empty, no bars are displayed. Other gauge markings indicate intermediate fuel levels between full and empty.

The low fuel warning light will illuminate when there are approximately 3.5 litres of fuel remaining in the fuel tank (see page 66). At this point, two bars will be visible in the fuel gauge and the information display in the multifunction display screen will switch to the Range to Empty display.

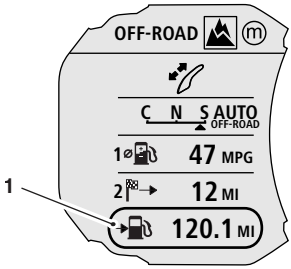

1. **Range to empty display**

Refuel at the earliest opportunity when the low fuel warning light is illuminated.

After refuelling, the fuel gauge and range to empty information will be updated only while riding the motorcycle. Depending on the riding style, updating could take up to five minutes.

Coolant Temperature Gauge

Caution

Do not continue to run the engine if either of the high temperature warnings are displayed as severe engine damage may result.

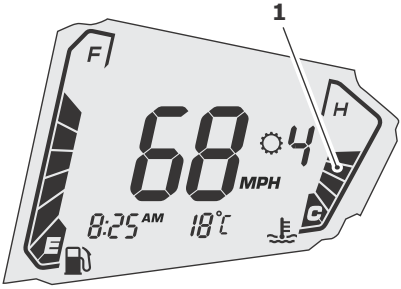

1. **Coolant temperature gauge**

The coolant temperature gauge indicates the temperature of the engine coolant.

When the ignition is switched on, all eight bars of the display will be shown. When the engine is started from cold the display will show no bars. As the temperature increases more bars in the display will be shown. When the engine is started from hot the display will show the relevant number of bars, dependent on engine temperature.

The normal temperature range is between four and six bars.

If the coolant temperature becomes too high the display will show eight bars and will start to flash. The high coolant temperature light in the tachometer will also flash.

Gear Position Display

The gear position display indicates which gear (one to six) has been engaged. When the transmission is in neutral (no gear selected), the display will show N.

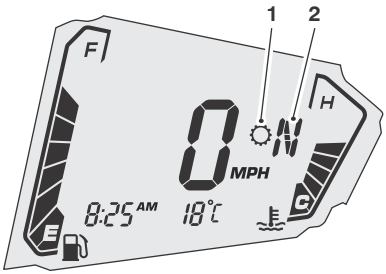

1. **Gear position symbol**
2. **Gear position display (neutral position shown)**

Cruise Control Set Speed

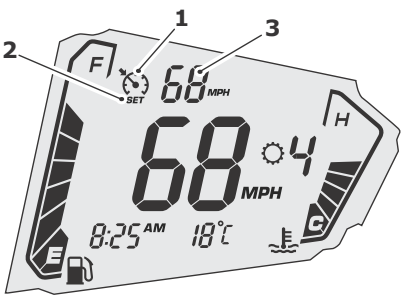

1. **Cruise control symbol**
2. **Cruise control set indicator**
3. **Cruise control set speed**

When cruise control is switched on, the cruise control symbol will be visible in the motorcycle status display screen.

The cruise control set speed will be displayed as -- until a speed has been set.

Upon setting a speed, the word SET will be visible below the cruise control symbol. The set speed will be displayed and the cruise control light in the tachometer will be illuminated.

When cruise control is deactivated, the cruise control light in the tachometer will go out but the set speed will remain visible in the motorcycle status display screen.

For more information, see Cruise Control on page 107.

Service Indicator

When the ignition is switched on and the distance to the next service is 500 miles (800 km) or less, the multifunction display will briefly show the distance remaining before the next service in the startup screen.

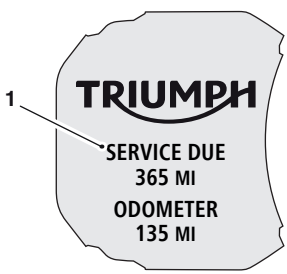

1. **Distance to next service**

If the service is overdue the distance will be displayed as a negative number and the service indicator will be displayed in the motorcycle status display screen.

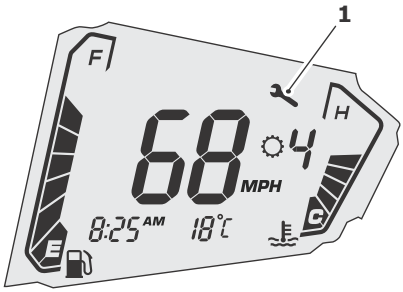

1. **Service indicator**

When the service has been carried out by your authorised Triumph dealer, the system will be reset.

The service indicator will also be displayed if a fault has occurred and the ABS and/or MIL warning lights are illuminated. Contact an authorised Triumph dealer as soon as possible to have the fault checked and rectified.

Clock

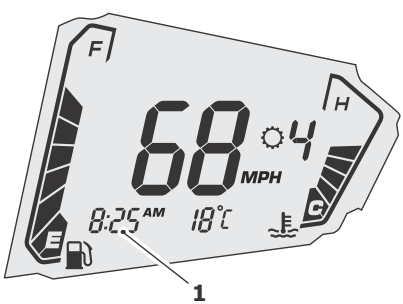

1. **Clock - 12 hour format displayed**

The clock can be displayed in 12 hour or 24 hour format.

To set the clock see Display Setup on page 81.

Ambient Air Temperature

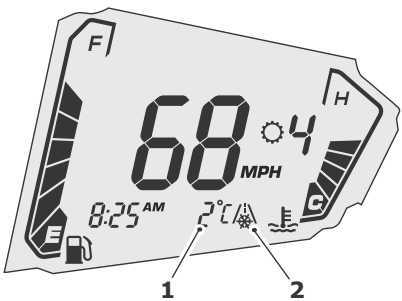

1. **Ambient air temperature shown in °C**
2. **Frost symbol**

The ambient air temperature is displayed in °C or °F.

The frost symbol will illuminate if the ambient air temperature is 4°C (39°F) or lower (see page 67).

When the motorcycle is stationary the heat of the engine may affect the accuracy of the ambient temperature display.

Once the motorcycle starts moving the display will return to normal after a short time.

To change the temperature from °C or °F, see Display Setup on page 81.

Multifunction Display Screen

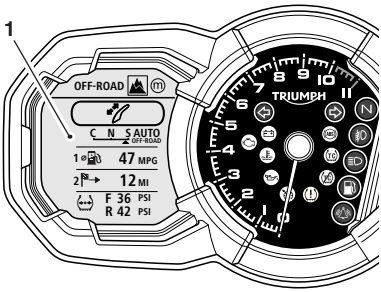

1. **Multifunction display screen**

The multifunction display screen allows the rider to view, select or configure:

- Riding modes
- Windscreen position
- Trip computers
- Motorcycle information
- Motorcycle settings
- Display settings.

The multifunction display screen is also used to display warning and information messages.

For more information on warning and information messages, see page 67.

Home Screen

The multifunction display home screen is used to show the current riding mode, windscreen adjustment mode, trip meters and motorcycle information.

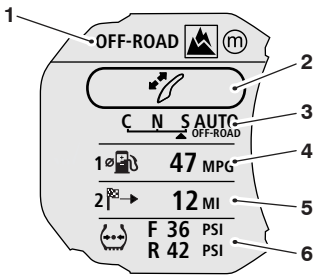

1. **Current riding mode**
2. **Windscreen adjustment mode**
3. **Trip 1 display**
4. **Trip 2 display (if activated)**
5. **Tyre Pressure Monitoring System (TPMS) information (if fitted)**

The home screen will show one trip meter as default but can be configured to show two trip meters. For more information on trip set up, see page 78.

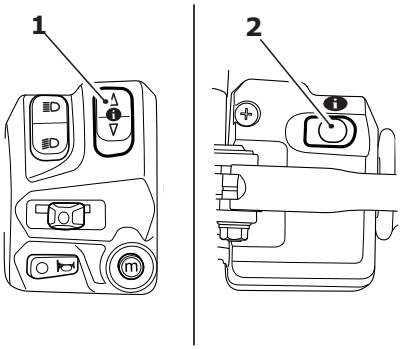

1. **SCROLL button**
2. **SELECT button**

To adjust or edit the home screen items:

- Press and release the SCROLL button until the required item is selected.
- Press and release the SELECT button to access the selected item's sub menu or adjustment screen.
- Press and hold the SELECT button to access the Settings menu. For more information, see page 77.

Riding Mode Display

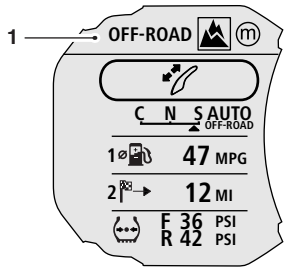

1. **Current riding mode display**

Shows the current riding mode. For more information on riding modes, see page 83.

Windscreen Adjustment Mode

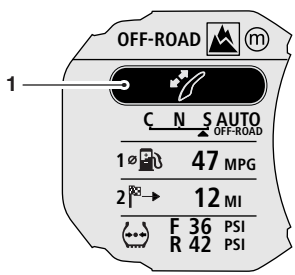

1. **Windscreen adjustment mode**

To access the windscreen adjustment mode:

- Press the SCROLL button until the windscreen adjust display is selected.
- Press the SELECT button to activate the windscreen adjustment mode.
- Use the SCROLL button to adjust the windscreen to the required height.
- There is a short time-out period to allow for further adjustment to take place before the instruments automatically exit the windscreen adjustment mode.
- Alternatively, press the SELECT button to exit the windscreen adjustment mode.

For more information on windscreen adjustment, see page 120.

Trip Meters

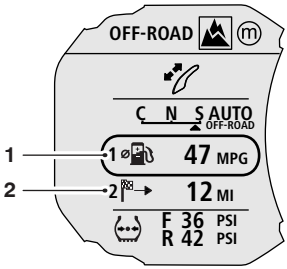

1. **Trip meter 1 display**
2. **Trip meter 2 display (if activated)**

The home screen will permanently display trip meter one as default, but can be configured to display two trip meters. For information on trip set up, see page 78.

Journey Distance

The total journey distance travelled since the trip meter was last reset to zero.

Trip Meter Reset

To reset either of the trip meters, from the home screen select the trip meter to be zeroed, then press and hold the SCROLL button in either direction for two seconds. After two seconds, all items within the selected trip meter will reset to zero.

Trip 2 can also be set to automatically reset after an adjustable time delay of between one and eight hours. See Trip Setup on page 78.

Motorcycle Information

Warning

When the motorcycle is in motion, only attempt to switch between the information and trip meter display modes or reset the trip meter under the following conditions:

- At low speed
- In traffic-free areas
- On straight and level roads or surfaces
- In good road and weather conditions.

Warning Continued

Failure to observe this important warning could lead to loss of motorcycle control and an accident.

The motorcycle information display shows the currently selected motorcycle information item.

Note:

- **If TPMS is fitted, the tyre pressures display will be available for selection.**
- **The motorcycle information display will automatically switch to the Range to Empty display when the low fuel warning light is illuminated.**

To access the motorcycle information menu:

- Press the SCROLL button until the motorcycle information display is selected.
- Press the SELECT button to enter the motorcycle information menu.

Motorcycle Information Menu

Any one of the available information items can be selected to be shown in the home screen.

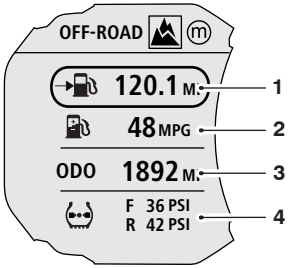

1. **Range to empty**
2. **Instantaneous fuel consumption**
3. **Odometer**
4. **Front and rear tyre pressures (if TPMS is fitted)**

To select an information item to be shown in the home screen:

- Press the SCROLL button until the required information item is selected.
- Press the SELECT button to confirm the selection and return to the home screen.

Each display provides the following information:

Range to Empty

This is an indication of the probable distance that can be travelled on the remaining fuel in the tank.

The distance shown will adapt based on the level of fuel in the tank and changes to the riding style.

Instantaneous Fuel Consumption

An indication of the fuel consumption at an instant in time. If the motorcycle is stationary, --.- will be shown in the display area.

Odometer

Shows the total distance that the motorcycle has travelled.

Front and Rear Tyre Pressures (if TPMS is fitted)

The front and rear tyre pressures are shown only if the Tyre Pressure Monitoring System (TPMS) is fitted.

Dashes will be shown in the tyre pressure display until the motorcycle reaches a speed of approximately 12 mph (20 km/h).

Settings Menu

To access the SETTINGS menu:

- Press and hold the SELECT button on the left hand switch housing until the SETTINGS menu is shown in the multifunction display screen.

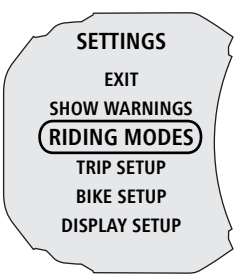

SETTINGS Menu

The following menu items are available for selection:

- EXIT
- SHOW WARNINGS (see **page 77**)
- RIDING MODES (see **page 77**)
- TRIP SETUP (see **page 78**)
- BIKE SETUP (see **page 79**)
- DISPLAY SETUP (see **page 81**).

A description of each menu item is described in the following pages.

Exit

Select EXIT to return to the home screen.

Show Warnings

Select SHOW WARNINGS to exit the SETTINGS menu and display all active warning or information messages in the multifunction display screen.

For more information on warning and information messages, see **page 67**.

Riding Modes

From the SETTINGS menu, select RIDING MODES to configure the ABS, MAP and TC settings for each available riding mode.

For more information on riding mode configuration, see **page 87**.

Trip Setup

From the SETTINGS menu, select TRIP SET UP to configure and reset the trip meters.

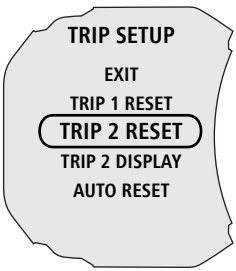

TRIP SETUP Screen

The following menu items are available for selection:

- EXIT
- TRIP 1 RESET
- TRIP 2 RESET
- TRIP 2 DISPLAY
- AUTO RESET.

Exit

Select EXIT to return to the SETTINGS menu.

Trip 1 and Trip 2 Reset

TRIP 1 RESET (CONFIRM Shown)

To reset TRIP 1 or TRIP 2:

- Press the SCROLL button to select the required trip meter to reset, either TRIP 1 RESET or TRIP 2 RESET.
- Press the SCROLL button to select CONFIRM, then press the SELECT button.
- All items within the selected trip meter will be immediately reset to zero and the display will return to the TRIP SETUP menu.

Trip 2 Display

TRIP 2 DISPLAY (ENABLE Shown)

To enable or disable the TRIP 2 DISPLAY:

- Press the SCROLL button to select TRIP 2 DISPLAY, then press the SELECT button.
- Press the SCROLL button to select ENABLE or DISABLE.
- Press the SELECT button to confirm the selection and return to the TRIP SETUP menu.

Auto Reset

The AUTO RESET function applies to TRIP 2 only. TRIP 1 must be reset manually using TRIP 1 RESET as previously described.

AUTO RESET (4 HRS Shown)

To auto reset the trip meters:

- Press the SCROLL button to select AUTO RESET, then press the SELECT button.
- Press the SCROLL button to select OFF, 1 HR, 2 HRS, 4 HRS or 8 HRS.
- Press the SELECT button to confirm the selection and return to the TRIP SETUP menu.
- After the ignition has been switched OFF and the set time has elapsed, all items within TRIP 2 will be reset to zero.

Bike Setup

From the SETTINGS menu, select BIKE SET UP to configure the Anti-Lock Braking System (ABS) and Traction Control (TC) settings.

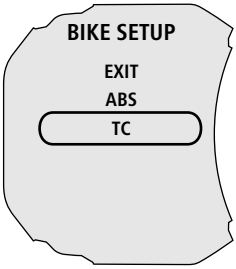

BIKE SETUP Menu

The following menu items are available for selection:

- EXIT
- ABS
- TC.

Exit

Select EXIT to return to the SETTINGS menu.

Anti-Lock Braking System (ABS)

It is possible to temporarily disable the ABS system. The ABS system cannot be permanently disabled, it will be automatically enabled when the ignition is turned OFF and then ON again.

Warning

Selecting ABS DISABLE will disable the anti-lock braking system.

The ABS settings stored for each riding mode will be overridden, regardless of whether they are set to Road, Off-Road or OFF.

The ABS and the riding mode ABS settings will not be enabled again until ENABLE is selected from the ABS menu or the ignition is turned OFF then ON again.

If the ABS is disabled, the brake system will function as a non-ABS braking system. In this situation braking too hard will cause the wheels to lock, and may result in loss of motorcycle control and an accident.

Warning

Do not attempt to adjust the ABS settings while the motorcycle is in motion as this may lead to loss of motorcycle control and an accident.

To enable or disable the ABS system:

- Press the SCROLL button to select ABS, then press the SELECT button to confirm.
- Press the SCROLL button to select ENABLE or DISABLE.

ABS (ENABLE Shown)

- Press the SELECT button to confirm the selection and return to the BIKE SETUP menu.
- If DISABLE is selected, the ABS warning light will be illuminated and the message WARNING - ABS SYSTEM DISABLED will be briefly shown in the multifunction display screen.
- The ABS and all riding mode ABS settings will be disabled until the ABS is re-enabled. All ABS settings are automatically enabled when the ignition is turned OFF and then ON again.

Note:

- **If the ABS is disabled by the rider, traction control and cruise control (if equipped) will still function.**

Traction Control (TC)

It is possible to temporarily disable the Traction Control (TC) system. The TC system cannot be permanently disabled, it will be automatically enabled when the ignition is turned OFF and then ON again.

Warning

Selecting TC DISABLE will disable the traction control system.

All traction control settings stored for each riding mode will be overridden regardless of whether they are set to Rain, Road, Sport, Off-Road or Off.

Traction control and the riding mode TC settings will not be enabled again until ENABLE is selected from the TC menu, or the ignition is turned OFF then ON again.

If traction control is disabled, the motorcycle will handle as normal but without traction control. In this situation accelerating too hard on wet/slippery road surfaces may cause the rear wheel to slip, and may result in loss of motorcycle control and an accident.

To enable or disable the traction control:

- Press the SCROLL button to select TC, then press the SELECT button to confirm.
- Press the SCROLL button to select ENABLE or DISABLE.

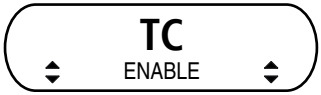

TC (ENABLE Shown)

- Press the SELECT button to confirm the selection and return to the BIKE SETUP menu.
- If DISABLE is selected, the TC disabled warning light will be illuminated and the message WARNING - TC SYSTEM DISABLED will be briefly shown in the multifunction display screen.
- Traction control and all riding mode traction control settings will be disabled until the traction control is re-enabled. All traction control settings are automatically enabled when the ignition is turned OFF and ON again.

Display Setup

From the SETTINGS menu, select DISPLAY SETUP to configure the display settings.

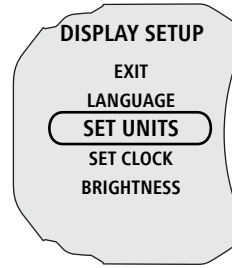

DISPLAY SETUP Menu

The following menu items are available for selection:

- EXIT
- LANGUAGE
- SET UNITS
- SET CLOCK
- BRIGHTNESS.

Exit

Select EXIT to return to the SETTINGS menu.

Language

LANGUAGE Menu (ENGLISH Shown)

The following languages are available:

- English
- French
- German
- Italian
- Dutch
- Spanish
- Swedish
- Brazilian.

To select a language:

- Press the SCROLL button to select LANGUAGE, then press the SELECT button to confirm.
- Press the SCROLL button to select the required language, then press the SELECT button to confirm and return to the DISPLAY SETUP menu.

Note:

- **All menu items displayed will change to the newly selected language when the SELECT button is pressed.**

Set Units

DISTANCE Menu (MILES shown)

To set the display units:

- Press the SCROLL button to select SET UNITS, then press SELECT to confirm.
- The DISTANCE menu is then shown. Press the SCROLL button to select MILES or KM and then press the SELECT button to confirm.

Note:

- **If DISTANCE has been set to MILES, the menu options available will be MPG (UK) or MPG (US).**
- **If DISTANCE has been set to KM, the menu options available will be KM/L or L/100 KM.**

- Use the SCROLL button to select the required unit and press the SELECT button to confirm.

Note:

- **If DISTANCE has been set to MILES, then TEMP (temperature) is shown. Press the SCROLL button to select either °F or °C and then press the SELECT button to confirm.**
- **If DISTANCE has been set to KM, then the temperature display will be automatically set to °C.**

- If TPMS is fitted, then the PRESSURE menu is shown.
- Press the SCROLL button to select either PSI, BAR or kPa.
- Press the SELECT button to confirm the settings and return to the DISPLAY SETUP menu.

Set Clock

SET CLOCK (24 HR Shown)

To set the clock:

- Press the SCROLL button to select SET CLOCK, then press the SELECT button to confirm.
- Press the SCROLL button to select the required clock display either 12 HR or 24 HR format and press the SELECT button to confirm.
- The SET HOUR menu is now shown. Press the SCROLL button to select the required hour display and press the SELECT button.
- The SET MINUTE menu is now shown. Press the SCROLL button to select the required minute display and press the SELECT button to confirm and return to the DISPLAY SETUP menu.

Brightness

BRIGHTNESS Menu

To adjust the brightness of the screen:

- Press the SCROLL button to select BRIGHTNESS, then press the SELECT button to confirm.
- Press the SCROLL button to adjust the instrument brightness using the adjustment slider between levels 1 (lowest) to 10 (highest).
- Press the SELECT button to save the selection and return to the DISPLAY SETUP menu.

Riding Modes

The riding mode system allows adjustment of the Anti-lock Brake System (ABS), throttle response (MAP) and Traction Control (TC) settings to suit different road conditions and rider preferences.

Riding modes can be selected using the MODE and SCROLL buttons on the left hand switch housing, whilst the motorcycle is stationary or moving.

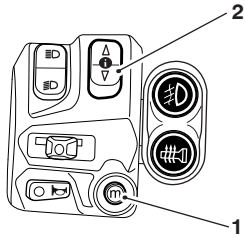

1. **MODE button**
2. **SCROLL button**

The following riding modes are available:

- RAIN
- ROAD
- OFF-ROAD

Each riding mode is fully adjustable but availability of the ABS, MAP and TC settings options may vary between modes. For more information on riding mode configuration, see page 87.

Riding Mode Selection

Warning

The selection of riding modes whilst the motorcycle is in motion requires the rider to allow the motorcycle to coast (motorcycle moving, engine running, throttle closed, clutch lever pulled in and no brakes applied) for a brief period of time.

Riding mode selection whilst the motorcycle is in motion should only be attempted:

•At low speed

•In traffic-free areas

•On straight and level roads or surfaces

•In good road and weather conditions

•Where it is safe to allow the motorcycle to briefly coast.

Riding mode selection whilst the motorcycle is in motion MUST NOT be attempted:

•At high speeds

•Whilst riding in traffic

•During cornering or on winding roads or surfaces

•On steeply inclined roads or surfaces

•In poor road/weather conditions

•Where it is unsafe to allow the motorcycle to coast.

Failure to observe this important warning may lead to loss of motorcycle control and an accident.

Warning

If ABS and/or TC has been disabled using the BIKE SETUP menu, the ABS and/or TC settings saved for all riding modes will be overridden.

ABS and/or TC will remain OFF regardless of the riding mode selection, until they have been re-enabled or, the ignition has been switch OFF then ON again.

If the ABS is disabled, the brake system will function as a non-ABS braking system. In this situation braking too hard will cause the wheels to lock, and may result in loss of motorcycle control and an accident.

If the traction control is disabled, the motorcycle will handle as normal but without traction control. In this situation accelerating too hard on wet/slippery road surfaces may cause the rear wheel to slip, and may result in loss of motorcycle control and an accident.

Warning

After selecting a riding mode, operate the motorcycle in an area free from traffic to gain familiarity with the new settings.

Do not loan your motorcycle to anyone as they may change the riding mode settings from those you are familiar with, causing loss of motorcycle control and an accident.

To select a riding mode:

Press and release the MODE button on the left hand switch housing to activate the riding mode selection menu in the multifunction display.

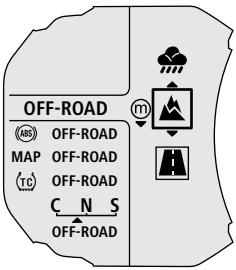

Riding Mode Selection Menu

Further presses of the MODE button will scroll through the riding modes in the following order:

- RAIN
- ROAD
- OFF-ROAD.

Alternatively, the SCROLL button can be used to scroll up or down through the riding modes.

Note:

- **To allow the user to scroll between each of the modes, there is a short time-out to allow for further scrolling to take place before the highlighted riding mode is automatically activated.**

Scroll through the riding modes until the desired mode is highlighted in the selection window.

The name of the highlighted riding mode and its currently stored ABS, MAP and TC settings, are displayed on the left hand side of the multifunction display.

The currently active riding mode is indicated with a border.

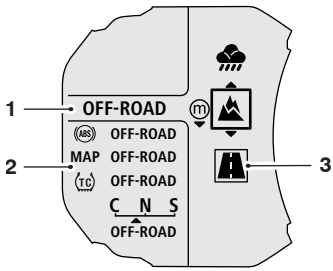

1. **Selected riding mode**
2. **Selected riding mode's ABS, MAP and TC settings**
3. **Currently active riding mode**

The riding mode shown in the selection window is automatically activated once the time-out has elapsed, and the following conditions for switching modes have been met.

Motorcycle Stationary - Engine Off

- The ignition is switched ON.
- The engine stop switch is in the RUN position.

Motorcycle Stationary - Engine On

- Neutral gear is selected or the clutch is pulled in.

Motorcycle in Motion

Within 30 seconds of selecting a riding mode the rider must carry out the following simultaneously:

- Close the throttle
- Pull the clutch in
- Make sure that the brakes are not engaged (allow the motorcycle to coast).

Note:

- **It is not possible to select OFF-ROAD mode whilst the motorcycle is in motion, if the ABS or TC settings are set to OFF-ROAD or OFF.**
- **In this case, the motorcycle must be brought to a stop before the riding mode change can take place.**

Once the ABS, MAP and TC settings have changed, the multifunction display will return to the home screen and the selected riding mode will be shown.

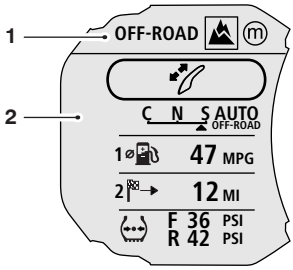

1. **Selected riding mode**
2. **Home screen**

The riding mode change is now complete and normal riding can be resumed.

Note:

- **The riding mode will default to ROAD when the ignition is switched ON if the OFF-ROAD mode was active the last time the ignition was switched OFF, with ABS and/or TC set to OFF-ROAD or OFF.**

Note:

- **Otherwise, the last selected riding mode will be remembered and activated when the ignition is switched ON.**
- **If the mode icons are not visible when the ignition switch is in the ON position, make sure that the engine stop switch is in the RUN position.**

Incomplete Riding Mode Changes

In the event of an incomplete riding mode change, both the previous and newly selected riding modes will be highlighted with a dashed border. This indicates that the ABS, MAP or TC settings specified by the newly requested riding mode have not been correctly activated.

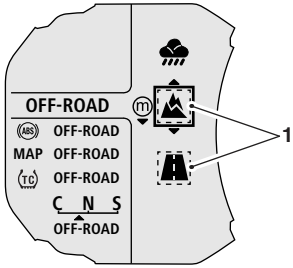

1. **Incomplete riding mode change**

In this case the MIL, ABS or TC warning light(s) may be illuminated depending on the current state of each system.

In the event of an incomplete riding mode change:

- Safely bring the motorcycle to a stop.
- Select neutral gear.
- Turn the ignition OFF and then back ON again.
- Select the required riding mode.
- Restart the engine and continue riding.

Warning

Do not stop the engine using the ignition switch or engine stop switch whilst the motorcycle is moving.

Always bring the motorcycle to a stop safely and engage neutral gear prior to stopping the engine.

Stopping the engine by turning off the ignition or engine stop switch whilst the motorcycle is moving can lock the rear wheel causing loss of motorcycle control and an accident.

Caution

Do not stop the engine using the ignition switch or engine stop switch whilst the motorcycle is moving.

Always bring the motorcycle to a stop safely and engage neutral gear prior to stopping the engine.

The transmission is pressure lubricated only when the engine is running. Inadequate lubrication may cause damage or seizure of the transmission, which can lead to sudden loss of motorcycle control and an accident.

Riding Mode Configuration

Refer to the following table for the ABS, MAP and TC options available for each riding mode.

Riding Mode			
	RAIN	**ROAD**	**OFF-ROAD**
ABS (Anti-lock Braking System)			
Road	●	●	⊘
Off-Road	⊘	⊘	●
Off	⊘	⊘	○
MAP (Throttle Response)			
Rain	●	○	○
Road	○	●	○
Off-Road	⊘	⊘	●
TC (Traction Control)			
Rain	●	○	⊘
Road	○	●	⊘
Off-Road	⊘	⊘	●
Off	⊘	⊘	○
Key			
●	Standard (Factory Default Setting)		
○	Selectable Option		
⊘	Option Not Available		

ABS Option Descriptions

Warning

The OFF-ROAD ABS option is NOT intended for use with normal, on-road riding.

Use of the rear brake pedal in this situation can cause the rear wheel to lock under heavy braking.

Riding on-road with the ABS set to OFF-ROAD can lead to instability when braking which may result in loss of motorcycle control and an accident.

Warning

If the ABS is disabled, the brake system will function as a non-ABS braking system. In this situation braking too hard will cause the wheels to lock, and may result in loss of motorcycle control and an accident.

- **Road** - Optimal ABS setting for road use.
- **Off-Road** - Optimal ABS setting for off-road use as follows:
- **Front Brake Lever Operation** - If the front brake lever is operated only, the partially integrated braking system will also apply a small amount of rear brake as described in Braking on **page 151**. In this situation, the level of ABS intervention is optimised for off-road riding for both front and rear wheels.
- **Rear Brake Pedal Operation** - If the rear brake pedal is operated at any point, all rear braking input will be controlled directly by the rear brake pedal. Operating the rear brake pedal will override any rear braking input applied by the partially integrated braking system, through use of the front brake lever. In this situation, the level of ABS intervention is optimised for off-road riding for the front wheel, but the rear wheel will be allowed to lock under heavy braking. Use of the rear brake pedal alone will only apply the rear brake and the rear wheel will be allowed to lock under heavy braking. The ABS warning light will flash slowly.

- **Off** - ABS is turned off. The ABS warning light will be illuminated.

MAP Option Descriptions

- **Rain** - Reduced throttle response when compared to the Road setting, for wet or slippery conditions.
- **Road** - Standard throttle response.
- **Off-Road** - Optimal throttle response setting for off-road use.

TC Option Descriptions

Warning

The OFF-ROAD TC option is not intended for normal, on-road riding.

Riding on-road with TC set to OFF-ROAD can produce instability under acceleration due to the increased amount of rear wheel slip allowed.

Instability caused by rear wheel slip may lead to loss of motorcycle control and an accident.

Warning

If the traction control is disabled, the motorcycle will handle as normal but without traction control. In this situation accelerating too hard on wet/slippery road surfaces may cause the rear wheel to slip, and may result in loss of motorcycle control and an accident.

- **Rain** - Optimal TC setting for wet or slippery conditions. Allows reduced rear wheel slip when compared with the Road setting.
- **Road** - Optimal TC setting for road use, allows a small amount of rear wheel slip.
- **Off-Road** - TC is set up for off-road use, allowing increased rear wheel slip when compared to the Rain, Road and Sport settings. The TC indicator light will flash slowly.
- **Off** - TC is turned OFF. The TC disabled warning light will be illuminated.

Note:

- **During riding mode configuration, ABS and TC can be activated or deactivated in the Off-Road and Rider modes.**
- **If the riding mode being configured is currently selected, adjustments to the ABS, MAP and TC systems will become immediately active.**
- **If the riding mode being configured is not currently selected, adjustments to the ABS, MAP and TC systems are saved and will become active the next time the riding mode is selected.**

To configure a riding mode:

With the motorcycle stationary, press and hold the SELECT button to activate the SETTINGS menu.

Use the SCROLL button to select RIDING MODES then press the SELECT button to confirm the selection.

RIDING MODES Menu

Use the SCROLL button to select the riding mode to be configured, then press the SELECT button to enter the selected riding mode's configuration menu.

Alternatively, press and hold the MODE button to provide direct access to a riding mode's configuration menu as follows:

From the Home Screen

Press and hold the MODE button while in the Home screen to activate the configuration menu for the currently active riding mode.

From the RIDING MODES Menu

Press and hold the MODE button while in the RIDING MODES menu to activate the configuration menu for the required riding mode.

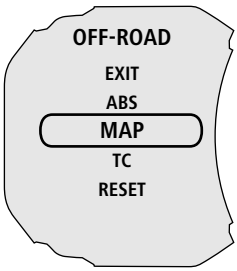

OFF-ROAD Configuration Menu (MAP Selected)

From a riding mode's configuration menu, press the SCROLL button until the required option is selected. Press the SELECT button to confirm and view the option's menu.

Exit

Select EXIT to return to the RIDING MODES menu.

ABS

ABS Menu (ROAD Selected)

To change the ABS setting:

- From the ABS menu, press the SCROLL button to select the required option. Press the SELECT button to confirm the selection and return to the configuration menu.

Warning

If the ABS is disabled, the brake system will function as a non-ABS braking system. In this situation braking too hard will cause the wheels to lock, and may result in loss of motorcycle control and an accident.

MAP

MAP Menu (ROAD Selected)

To change the MAP setting:

- From the MAP menu, press the SCROLL button to select the required option. Press the SELECT button to confirm the selection and return to the configuration menu.

TC

TC Menu (ROAD Selected)

To change the TC setting:

- From the TC menu, press the SCROLL button to select the required option. Press the SELECT button to confirm the selection and return to the configuration menu.

Warning

If the traction control is disabled, the motorcycle will handle as normal but without traction control. In this situation accelerating too hard on wet/slippery road surfaces may cause the rear wheel to slip, and may result in loss of motorcycle control and an accident.

Reset

RESET Menu (CONFIRM Selected)

To reset the riding modes:

- From the RESET menu, press the SCROLL button to select CONFIRM to return the selected riding mode's configuration to the factory default settings.
- Refer to the table on page 87 for details of the factory default settings for each riding mode.

GENERAL INFORMATION

Table of Contents

Hand Controls 94
Keyless Ignition (if fitted) 94
Master Ignition Switch (if fitted) 95
Ignition Key 95
Ignition Switch/Steering Lock 96
Right Handlebar Switches 97
Right Handlebar Switches 99
Left Handlebar Switches 100
Left Handlebar Switches 103
Throttle Control 105
Brake and Clutch Lever Adjusters 106
Cruise Control 107
Activating Cruise Control 108
Adjusting the Set Speed While in Cruise Control 109
Deactivating Cruise Control 109
Resuming the Cruise Control Set Speed 110
Triumph Semi Active Suspension (TSAS) (if fitted) 110
Traction Control (TC) 112
Optimised Cornering Traction Control (if fitted) 112
Traction Control Settings 113
Tyre Pressure Monitoring System (TPMS) (if fitted) 114
Tyre Pressure Sensor Serial Number 114
System Display 115
Sensor Batteries 116
TPMS System Fault 116
Tyre Pressures 116
Low Tyre Pressure 117
Fuel 117
Fuel Requirement/Refuelling 117
Fuel Tank Cap 118
Filling the Fuel Tank 119
Windscreen 120
Handlebar Adjustment 122
Stands 123
Side Stand 123
Centre Stand (if fitted) 124

Seats 124
Seat Care 124
Passenger Seat 124
Rider's Seat 125
Rider's Seat Height Adjustment 126
Heated Seats (if fitted) 127
Helmet Hook 128
Tool Kit, Handbook and the Triumph Accessory D-Lock 129
Electrical Accessory Sockets 129
Universal Serial Bus (USB) Socket 130
Expedition Aluminium Panniers (if fitted) 132
Running-In 139
Daily Safety Checks 140

Hand Controls

Keyless Ignition (if fitted)

The keyless ignition system allows the motorcycle to be started without the use of a mechanical key.

There are three keys supplied with the motorcycle. One smart key and two standard keys.

Smart Key

Note:

- **An additional smart key can be purchased from your Triumph dealer. However, only three keys can be programmed to the motorcycle. This can be a combination of smart keys and standard keys.**

Smart Key Operation

Press the button on the smart key to turn the key on. The button light shows green briefly to indicate that the smart key is on.

A short press on the smart key button shows the status of the smart key; red is OFF and green is ON. A long press of the button will change the status to OFF or ON after briefly showing the original status colour first.

The smart key must be within close proximity (one metre/three feet) of the system sensor, which is located on the left hand side of the motorcycle. If the smart key is out of range of the system sensor then it will be unresponsive and the keyless ignition can not be activated.

If the smart key battery is flat, then use the smart key in the standard key operation method.

For more information on starting the engine with keyless ignition, see page 148.

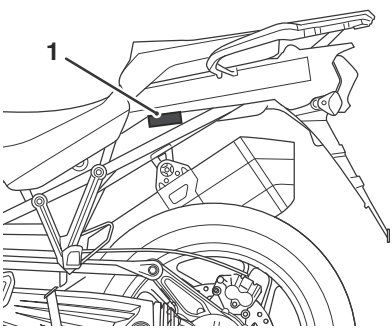

1. **System sensor location**

Standard Key Operation

To turn the motorcycle on with the standard key, hold the standard key on the system sensor located on the left hand side of the motorcycle. The standard key must be held against the system sensor while pressing the Engine Start/Stop switch in either the QUICK START or Power ON/OFF position (see page 98).

Caution

All keys supplied with the motorcycle are specific to the individual motorcycle. They can not be used on another motorcycle.

If all keys are lost, misplaced or damaged, then the chassis control unit on the motorcycle will need to be replaced.

To avoid unnecessary cost and time, make sure that all spare keys are kept in a secure location.

Caution

If there is a fault with the smart key or the smart key battery is flat then take the smart key to the nearest Triumph dealer to rectify.

Master Ignition Switch (if fitted)

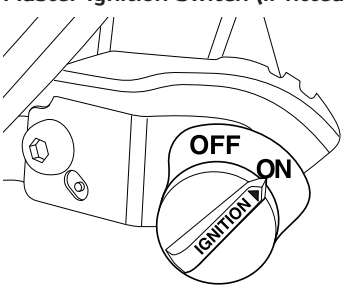

ckde

Master Ignition Switch

The master ignition switch is only fitted to motorcycles in the United States and Canada. The master ignition switch is located on the right hand side of the instrument panel.

To operate the motorcycle with the keyless ignition, the master ignition switch must be in the ON position.

If the master ignition switch is in the OFF position then the keyless ignition can not be used and the motorcycle can not be started.

Ignition Key

Tiger 1200 XR Only

Warning

Additional keys, key rings/chains or items attached to the ignition key may interfere with the steering, leading to loss of motorcycle control and an accident.

Remove all additional keys, key rings/chains and items from the ignition key before riding the motorcycle.

Caution

Additional keys, key rings/chains or items attached to the ignition key may cause damage to the motorcycle's painted or polished components.

Remove all additional keys, key rings/chains and items from the ignition key before riding the motorcycle.

Caution

Do not store the spare key with the motorcycle as this will reduce all aspects of security.

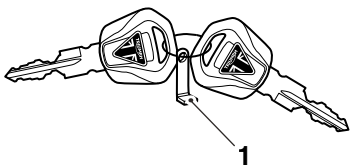

cixj

1. **Key number tag**

In addition to operating the ignition switch/steering lock, the ignition key is required to operate the seat lock and fuel tank cap.

When the motorcycle is delivered from the factory, two ignition keys are supplied together with a small tag bearing the key number. Make a note of the key number and store the spare key and key number tag in a safe place away from the motorcycle.

A transponder is fitted within the ignition keys to turn off the engine immobiliser. To make sure the immobiliser functions correctly, always have only one of the ignition keys near the ignition switch. Having two ignition keys near the switch may interrupt the signal between the transponder and the engine immobiliser. In this situation the engine immobiliser will remain active until one of the ignition keys is removed.

Always get replacement keys from your authorised Triumph dealer. Replacement keys must be 'paired' with the motorcycle's immobiliser by your authorised Triumph dealer.

Ignition Switch/Steering Lock

Tiger 1200 XR Only

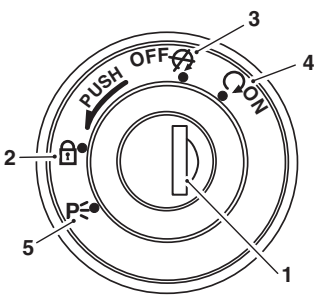

1. **Ignition switch/steering lock**
2. **LOCK position**
3. **OFF position**
4. **ON position**
5. **PARK position**

Engine Immobiliser

The ignition barrel housing acts as the antenna for the engine immobiliser.

When the ignition switch is turned to the OFF position and the ignition key is removed, the engine immobiliser is on. The engine immobiliser is turned off when the ignition key is in the ignition switch and it is turned to the ON position.

Ignition Switch Positions

This is a four-position, key operated switch. The key can be removed from the switch only when it is in the OFF, LOCK or P (PARK) position.

TO LOCK: Turn the handlebar fully to the left, turn the key to the OFF position, push and fully release the key, then rotate it to the LOCK position.

PARKING: Turn the key from the LOCK position to the P position. The steering will remain locked, and the position lights will be switched on.

Note:

- **Do not leave the steering lock in the P position for long periods of time as this will cause the battery to discharge.**

Warning

For reasons of security and safety, always move the ignition switch to the OFF, LOCK or PARK position and remove the key when leaving the motorcycle unattended.

Any unauthorised use of the motorcycle may cause injury to the rider, other road users and pedestrians and may also cause damage to the motorcycle.

Warning

With the key in the LOCK or P position the steering will become locked.

Never turn the key to the LOCK or P positions while the motorcycle is moving as this will cause the steering to lock. Locked steering will cause loss of motorcycle control and an accident.

Right Handlebar Switches

All Models except Tiger 1200 XR

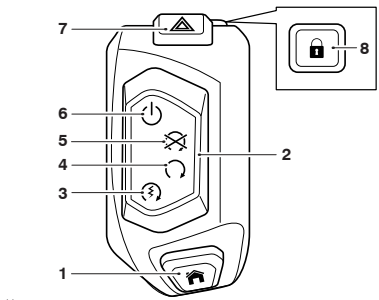

1. **HOME button**
2. **Engine start/stop switch**
3. **QUICK START position**
4. **RUN position**
5. **STOP position**
6. **Power ON/OFF position**
7. **Hazard warning lights switch**
8. **Steering lock button**

HOME Button

The HOME button is used to access the main menu on the instrument display.

Press and release the HOME button to select between the main menu and instrument display.

QUICK START Position

The QUICK START position operates the electric starter allowing for a quicker ignition start.

From the ignition off, press and hold the engine start/stop switch in the QUICKSTART position with all the correct conditions met, to start the motorcycle.

For more information, see **page 148**.

RUN Position

The engine start/stop switch must be in the RUN position for the motorcycle to operate.

STOP Position

The STOP position stops the engine.

Note:

- **Although the engine stop position stops the engine, it does not turn off all the electrical circuits and may cause difficulty in restarting the engine due to a discharged battery. Ordinarily, only the ignition switch should be used to stop the engine.**

Power ON/OFF Position

The Power ON/OFF position switches the electrical circuits and the instrument display between on or off. This allows access to the instrument display without starting the engine when switched ON.

Caution

Do not leave the switch in the Power ON position for a long period of time as this may cause damage to electrical components and will discharge the battery.

Hazard Warning Lights Button

To turn the hazard warning lights on or off, press and release the hazard warning light button.

The ignition must be switched on for the hazard warnings lights to be activated, but the hazard lights will remain active if the ignition is switched off until the hazard warning light button is pressed again.

Steering Lock Button

To lock the motorcycle, turn the handlebar fully to the left and press the steering lock button.

When the ignition is off then the engine immobiliser is on. The engine immobiliser is turned off when the ignition is started.

Warning

For reasons of security and safety, always make sure the steering lock is on when leaving the motorcycle unattended.

Any unauthorised use of the motorcycle may cause injury to the rider, other road users and pedestrians and may also cause damage to the motorcycle.

Right Handlebar Switches

Tiger 1200 XR Only

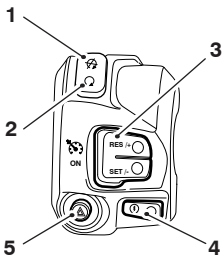

1. **Engine stop switch - STOP position**
2. **Engine stop switch - RUN position**
3. **Cruise control adjust button**
4. **Starter button**
5. **Hazard warning lights button**

Engine Stop Switch

In addition to the ignition switch being turned to the ON position, the engine stop switch must be in the RUN position for the motorcycle to operate.

The engine stop switch is for emergency use. If an emergency arises which requires the engine to be stopped, move the engine stop switch to the STOP position.

Note:

- **Although the engine stop switch stops the engine, it does not turn off all the electrical circuits and may cause difficulty in restarting the engine due to a discharged battery. Ordinarily, only the ignition switch should be used to stop the engine.**

Caution

Do not leave the ignition switch in the ON position unless the engine is running as this may cause damage to electrical components and will discharge the battery.

Starter Button

The starter button operates the electric starter. For the starter to operate, the clutch lever must be pulled to the handlebar.

Note:

- **Even if the clutch lever is pulled to the handlebar, the starter will not operate if the side stand is down and a gear is engaged.**

Cruise Control Adjust Button

The cruise control adjust button is a two way switch with the top marked RES/+ and the bottom marked SET/- (see page 107).

Hazard Warning Lights Button

To turn the hazard warning lights on or off, press and release the hazard warning light button.

The ignition must be switched on for the hazard warnings lights to be activated, but the hazard lights will remain active if the ignition is switched off until the hazard warning light button is pressed again.

Left Handlebar Switches

All Models except Tiger 1200 XR

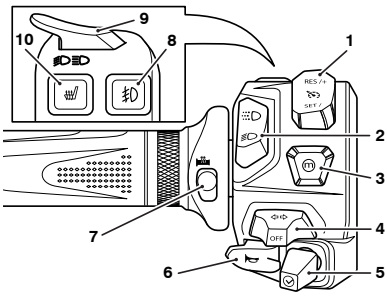

ckdf

1. **Cruise control adjust switch**
2. **Daytime Running Lights (DRL) switch (if fitted)**
3. **MODE button**
4. **Direction indicator switch**
5. **Joystick button**
6. **Horn button**
7. **Heated grips switch**
8. **Front fog lights switch (if fitted)**
9. **High beam button**
10. **Rider's heated seat switch (if fitted)**

Cruise Control Adjust Button

The cruise control adjust button is a two way switch with the top marked RES/+ and the bottom marked SET/-.

For more information on cruise control operation, see **page 107**.

Daytime Running Lights (DRL) Switch (if fitted)

When the ignition is switched ON and the daytime running lights switch is set to DRL mode, the daytime running lights warning light will illuminate.

The daytime running lights and low beam headlights are operated manually using the DRL switch. Press the top of the switch for DRL mode, and the bottom of the switch for low beam headlight mode.

Warning

Do not ride for longer than necessary in poor ambient light conditions with the Daytime Running Lights (DRL) in use.

Riding with the daytime running lights when dark, in tunnels or where poor ambient light is apparent may reduce the riders vision or dazzle other road users.

Dazzling other road users or reduced vision in low ambient light levels may result in loss of motorcycle control and an accident.

Note:

- **During daylight hours the daytime running lights improve the motorcycles visibility to other road users.**
- **Low beam headlights must be used in any other conditions unless the road conditions allow for high beam headlights to be used.**

MODE Button

When the MODE button is pressed and released it will activate the Riding Mode Selection Menu in the display screen. Further presses of the MODE button will scroll through the available riding modes (see Riding Mode Selection on page 84).

Press and hold the MODE button provides direct access to a riding mode's configuration menu.

For more information on riding mode selection and configuration, see page 87).

Direction Indicator Switch

When the indicator switch is pushed to the left or right and released, the corresponding direction indicators will flash on and off. To turn off the indicators, push and release the switch in the central position.

Models Equipped with Automatic Self-Cancelling Indicators

A short press and release of the indicator switch to the left or right will cause the corresponding direction indicators to flash on and off three times, then go off.

A longer press and release of the indicator switch to the left or right will cause the corresponding direction indicators to flash on and off until they are cancelled as follows:

The indicator self-cancel system becomes active eight seconds after operating a direction indicator. Eight seconds after turning the direction indicator on and after riding a further 65 metres, the indicator self-cancel system will automatically turn off the indicators.

To disable the indicator self-cancel system refer to the Bike Setup section on page 49.

The indicators can be cancelled manually. To manually turn off the indicators, press and release the indicator switch in the central position.

Joystick Button

The Joystick is used to operate the following functions of the instruments:

- Up - scroll the menu from the bottom to the top
- Down - scroll the menu from the top to the bottom
- Left - scroll the menu to the left
- Right - scroll the menu to the right
- Centre - press to confirm selection.

Horn Button

When the horn button is pushed, with the ignition switch turned to the ON position, the horn will sound.

Heated Grips Switch

The heated grips will only heat when the engine is running.

When the heated grips are switched on, the heated grips symbol will appear in the display and the selected heat level will be shown.

There are three levels of heat: low, medium and high. This is indicated by the different colours of the symbols shown in the display.

1. **Low heat symbol (yellow)**
2. **Medium heat symbol (orange)**
3. **High heat symbol (red)**

For maximum benefit in cold conditions, from the OFF position press the switch once for the high heat setting initially and then reduce the heat level by pressing the switch again for a low heat setting when the grips have warmed up.

To turn off the heated grips, press and release the switch until the heated grips symbol is no longer shown in the display.

Low Power Voltage Cut Off

If a low voltage is detected, the heated grips switch will power off. The heated grips will not function again until the voltage rises to a safe level.

The switch will not power back on automatically even if the voltage rises to the safe level. The user must manually press the switch again to activate the heated grips.

Fog Lights Switch (if fitted)

To turn the fog lights on or off, with the headlights on, press and release the fog lights switch. When the fog lights are turned on, the fog lights indicator will illuminate in the display.

Note:

- **The fog lights switch will only operate when the headlights are on.**
- **The fog lights switch will reset to off when the ignition is turned off then on again.**

High Beam Button

The high beam button has a different function depending on whether Daytime Running Lights (DRL) are fitted or not. When the high beam is turned on, the high beam indicator light will illuminate in the display.

Models with Daytime Running Lights (DRL)

If the DRL switch is in the Daytime Running Lights (DRL) position, then press and hold the high beam button to turn the high beam on. It will remain on as long as the button is held in and will turn off as soon as the button is released.

If the DRL switch is in the dip beam position, press the high beam button to switch the high beam on. Each press of the button will swap between dip and high beam.

Note:

- **A lighting on/off switch is not fitted to this model. The rear light and licence plate light all function automatically when the ignition is turned to the ON position.**
- **The headlight will function when the ignition is turned on and the engine is running.**

Models without Daytime Running Lights (DRL)

Press the high beam button to switch the high beam on. Each press of the button will swap between dip and high beam.

Note:

- **A lighting on/off switch is not fitted to this model. The position light, rear light and licence plate light all function automatically when the ignition is turned to the ON position.**
- **The headlight will function when the ignition is turned on and the engine is running.**

Rider's Heated Seat Switch (if fitted)

The rider's heated seat will only heat when the engine is running. When the rider's heated seat is switched on, then the rider's heated seat symbol will appear in the display. The selected heat level will also be indicated by the colour of the symbol.

For more information, see page 127.

Left Handlebar Switches

Tiger 1200 XR Only

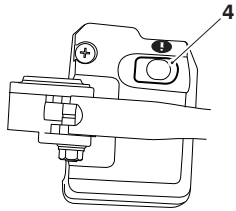

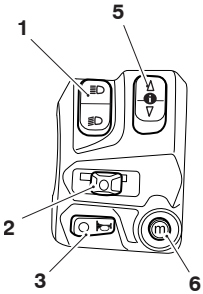

1. **Headlight dip switch**
2. **Direction indicator switch**
3. **Horn button**
4. **Instruments SELECT button**
5. **Instruments SCROLL button**
6. **MODE button**

Headlight Dip Switch

High or dip beam can be selected with the headlight dip switch. To select high beam, push the switch forward. To select dip beam, push the switch rearwards. When the high beam is turned on, the high beam indicator light will illuminate in the tachometer.

Pass Function

With the headlight dip switch set to the dip beam position, pressing the bottom of the switch will activate the pass function.

When pressed, the headlight high beam will be switched on. It will remain on as long as the switch is held in and will turn off as soon as the switch is released.

Note:

- **A lighting on/off switch is not fitted to this model. The position light, rear light and licence plate light all function automatically when the ignition is turned to the ON position.**
- **The headlight will function when the ignition switch is turned to the ON position and the engine is running.**

There are two alternate ways to turn on the headlight without the engine running:

- Pull in the clutch lever then turn the ignition to the ON position. The headlight will be on and will remain on when the clutch lever is released.
- With the ignition on and the headlight dip switch set to the dip beam position, pressing the bottom of the switch will activate the headlight. The headlight will remain on when the switch is released.

The headlight will go off while pressing the starter button until the engine starts.

Direction Indicator Switch

When the indicator switch is pushed to the left or right and released, the corresponding direction indicators will flash on and off. To turn off the indicators, push and release the switch in the central position.

Horn Button

When the horn button is pushed, with the ignition switch turned to the ON position, the horn will sound.

Instrument SELECT Button

When the SELECT button is pressed and released it will select the menu highlighted in the multifunction display screen.

Pressing and holding the SELECT button when the motorcycle is stationary will activate the Settings Menu in the multifunction display (see Settings Menu on page 77).

Instrument SCROLL Button

When the SCROLL button is pressed and released it will scroll through the menu visible in the instrument's display screen.

MODE Button

When the MODE button is pressed and released it will activate the Riding Mode Selection Menu in the multifunction display screen. Further presses of the mode button will scroll through the available riding modes (see Riding Mode Selection on page 84).

Pressing and holding the MODE button will provide direct access to a Riding Mode's Configuration Menu (see Riding Mode Configuration on page 87).

Throttle Control

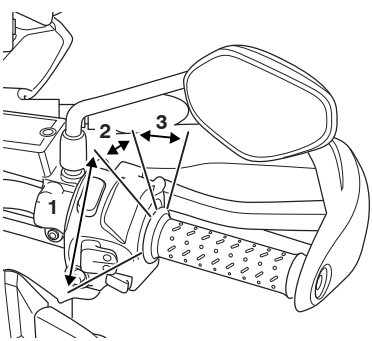

1. **Throttle open position**
2. **Throttle closed position**
3. **Cruise control cancel position**

This Triumph model has an electronic throttle twist grip to open and close the throttle via the engine control unit. There are no direct-acting cables in the system.

The throttle grip has a resistive feel to it as it is rolled rearwards to open the throttle. When the grip is released it will return to the throttle closed position by its internal return spring and the throttle will close.

From the closed position, the throttle twist grip can be rolled forward 3 - 4 mm to deactivate the cruise control (see page 109).

There are no user adjustments for the throttle control.

If there is a malfunction with the throttle control the Malfunction Indicator Light (MIL) becomes illuminated and one of the following engine conditions may occur:

- MIL illuminated, restricted engine RPM and throttle movement
- MIL illuminated, limp-home mode with the engine at a fast idle condition only
- MIL illuminated, engine will not start.

For all of the above conditions contact an authorised Triumph dealer as soon as possible to have the fault checked and rectified.

Brake Use

Warning

Reduce speed and do not continue to ride for longer than is necessary with the malfunction indicator light illuminated. The fault may adversely affect engine performance, exhaust emissions and fuel consumption.

Reduced engine performance could cause a dangerous riding condition, leading to loss of motorcycle control and an accident.

Contact an authorised Triumph dealer as soon as possible to have the fault checked and rectified.

At low throttle opening (approximately 20°), the brakes and throttle can be used together.

At high throttle opening (greater than 20°), if the brakes are applied for more than two seconds the throttles will close and the engine speed will reduce. To return to normal throttle operation, release the throttle control, release the brakes and then re-open the throttle.

Brake and Clutch Lever Adjusters

Warning

Do not attempt to adjust the lever with the motorcycle in motion as this may lead to loss of motorcycle control and an accident.

Warning Continued

After adjusting the lever, operate the motorcycle in an area free from traffic to gain familiarity with the new lever setting. Do not loan your motorcycle to anyone as they may change the lever setting from the one you are familiar with causing loss of motorcycle control and an accident.

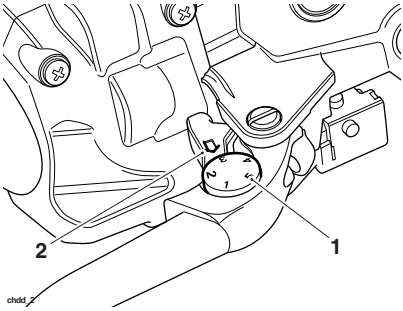

1. **Adjuster wheel, brake lever shown**
2. **Arrow mark**

An adjuster is fitted to both the front brake and clutch levers. The adjusters allow the distance from the handlebar to the lever to be changed to one of five positions for the front brake lever or four positions for the clutch lever, to suit the span of the operator's hands.

To adjust the lever:

- Push the lever forward and turn the adjuster wheel to align one of the numbered positions with the arrow mark on the lever holder.
- The distance from the handlebar grip to the released lever is shortest when set to number five, and longest when set to number one.

Cruise Control

Warning

Cruise control must only be used where you can drive safely at a steady speed.

Cruise control should not be used when riding in heavy traffic, on roads with sharp/blind bends or when they are slippery.

Using cruise control in heavy traffic, on roads with sharp/blind bends or when they are slippery, may result in loss of motorcycle control and an accident.

Warning

This Triumph motorcycle should be operated within the legal speed limits for the particular road travelled. Operating a motorcycle at high speeds can be potentially dangerous since the time available to react to given traffic situations is greatly reduced as speed increases. Always reduce speed in consideration of weather and traffic conditions.

Warning

Only operate this Triumph motorcycle at high speed in closed-course, on-road competition or on closed-course racetracks. High speed operation should only then be attempted by riders who have been instructed in the techniques necessary for high speed riding and are familiar with the motorcycle's behaviour in all conditions.

Warning Continued

High speed operation in any other circumstances is dangerous and will lead to loss of motorcycle control and an accident.

Note:

- **Cruise control may not function if there is a malfunction with the ABS system and the ABS warning light is illuminated.**
- **Cruise control will continue to function if a riding mode is selected with ABS set to Off-Road or Off.**
- **Cruise control will continue to function if ABS has been disabled.**

Tiger 1200 XR Only

The cruise control buttons are located on the right hand switch housing and can be operated with minimum movement by the rider.

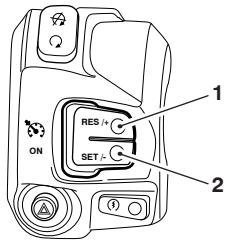

1. **Cruise control RES/+ button**
2. **Cruise control SET/- button**

All Models except Tiger 1200 XR

The cruise control buttons are located on the left hand switch housing and can be operated with minimum movement by the rider.

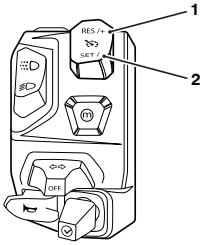

1. **Cruise control RES/+ button**
2. **Cruise control SET/- button**

Cruise control can be switched on or off at any time but it can not be activated until all the conditions described on **page 108** have been met.

Activating Cruise Control

To turn on the cruise control system, press the SET/- button. The cruise control symbol will be shown in the display screen. The cruise control set speed will be shown as '--' indicating that a speed has not yet been set.

To activate cruise control, the following conditions have to be met:

- The motorcycle must be travelling at a speed between 19 to 100 mph (30 to 160 km/h).
- The motorcycle must be in 3 rd gear or higher.
- Once these conditions have been met, press the SET/- button to activate cruise control. The cruise control symbol will be shown in a green light in the TFT display to indicate that cruise control is now active.

The word SET will be shown next to the cruise control symbol. The cruise control set speed will be shown and the cruise control light will illuminate in the tachometer indicating that cruise control is active.

Tiger 1200 XR Only

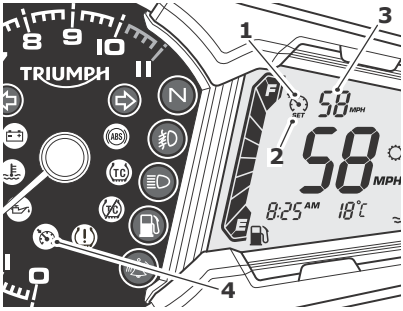

1. **Cruise control symbol**
2. **Cruise control set indicator**
3. **Cruise control set speed**
4. **Cruise control light**

All Models except Tiger 1200 XR

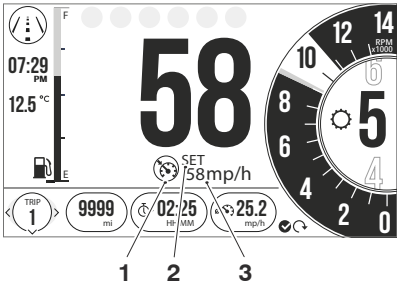

1. **Cruise control symbol**
2. **Cruise control set indicator**
3. **Cruise control set speed**

The cruise control system will maintain the set speed until:

- The set speed is adjusted as described on **page 109**.
- Cruise control is deactivated as described on **page 109**.

Adjusting the Set Speed While in Cruise Control

To adjust the set speed while in cruise control, press and release the:

- RES/+ button to increase the speed
- SET/- button to decrease the speed.

Each press of the buttons will adjust the speed by 1 mph or 1 km/h. If the buttons are held, the speed continuously increases or decreases in single digit increments.

Stop pressing the adjust button when the desired speed is shown in the display.

Note:

- **The cruise control set speed display will flash until the new set speed has been achieved.**
- **If riding up a steep incline and cruise control is unable to maintain the set speed, the cruise control set speed display will flash until the motorcycle has regained the set speed.**

An alternative way to increase the speed in cruise control is to accelerate to the desired speed using the throttle grip and then press the SET/- button.

Deactivating Cruise Control

The cruise control can be deactivated by one of the following methods:

- Roll the throttle twist grip fully forward.
- Pull the clutch lever.
- Operate the front or rear brake.
- Increase speed by using the throttle for more than 60 seconds.

Upon deactivation, the cruise control light will go out in the tachometer but the SET indicator and set speed will still be shown in the display screen, indicating that the cruise control set speed has been stored.

The cruise control set speed can be resumed as described on **page 110**, provided the cruise control has not been deactivated by turning the ignition switch to the OFF position.

Resuming the Cruise Control Set Speed

Warning

When resuming cruise control, always make sure that the traffic conditions are suitable for the set speed.

Using cruise control in heavy traffic, on roads with sharp/blind bends or when they are slippery, may result in loss of motorcycle control and an accident.

Cruise control will be deactivated if one of the following actions has been taken:

- Roll the throttle twist grip fully forward.
- Pull the clutch lever.
- Operate the front or rear brake.
- Increase speed by using the throttle grip for more than 60 seconds.

The cruise control set speed can be resumed by pressing and releasing the RES/+ button provided a set speed has been stored.

The motorcycle must be travelling at a speed between 19 to 100 mph (30 to 160 km/h) and be in 3rd gear or higher.

A stored set speed is indicated by the word SET next to the cruise control symbol in the display screen.

The stored set speed will remain in the cruise control memory until the ignition switch has been turned to the OFF position.

Note:

- **The cruise control set speed display will flash until the resumed set speed has been achieved.**

Triumph Semi Active Suspension (TSAS) (if fitted)

Note:

- **All models except for Tiger 1200 XR are fitted with Triumph Semi Active Suspension (TSAS).**

Warning

After adjusting the suspension, operate the motorcycle in an area free from traffic to gain familiarity with the new settings.

Do not loan your motorcycle to anyone as they may change the suspension settings from the one you are familiar with causing loss of motorcycle control and an accident.

The Triumph Semi-Active Suspension System (TSAS) controls adjustment of the front and rear suspension damping and automatic rear suspension preload settings.

TSAS allows a convenient remote adjustment of the TSAS mode and damping settings through the instruments, while the motorcycle is stationary or moving.

TSAS adjustments are made instantaneously once a new mode or damping setting has been selected and the engine is running.

TSAS Modes

The following TSAS modes are available for selection:

- Auto - The TSAS system will automatically detect the type of surface being ridden on (road or off-road) and will adjust rebound and compression damping settings accordingly.
- Off-Road - Optimal TSAS settings for off-road use.

TSAS Damping Settings

There are a total of nine damping settings available for selection ranging from COMFORT (soft) to SPORT (firm) with the three main settings being:

- COMFORT
- NORMAL
- SPORT.

For more information on accessing the TSAS settings, see page 47.

System Calibration

The TSAS system will recalibrate adjustment motors under the following conditions:

- If the battery has been disconnected for any reason.
- If a fault occurs with the TSAS system during normal operation.

The warning light will flash twice every second during system recalibration.

To allow the system to calibrate correctly, the following procedure must be adhered to:

- Turn the ignition on. Do not start the engine.
- Wait for the warning light to stop flashing indicating that adjustment motor calibration is complete.
- Start the engine. If the warning light resumes flashing. the adjustment motors are being recalibrated due to low battery voltage.
- Wait for the warning light to stop flashing before riding the motorcycle.

Failure to follow this procedure will cause the recalibration to be stopped and the warning light to remain lit.

In this case the warning light will extinguish once the recalibration is next allowed to complete.

Traction Control (TC)

Warning

The traction control and optimised cornering traction control systems are not a substitute for riding appropriately for the prevailing surface and weather conditions. The systems cannot prevent loss of traction due to:

• excessive speed when entering turns

• accelerating at a sharp lean angle

• braking.

Traction control or optimised cornering traction control cannot prevent the front wheel from slipping.

Failure to observe any of the above may result in loss of motorcycle control and an accident.

All motorcycles are equipped with Traction Control (TC).

Traction control is a system that helps to maintain traction when accelerating on wet/slippery road surfaces. If sensors detect that the rear wheel is losing traction (slipping), the traction control system will engage and alter the engine power until traction to the rear wheel has been restored.

The traction control indicator light will flash while it is engaged and the rider may notice a change to the sound of the engine.

For information on the traction control indicator light operation, see page 27 and page 64.

Optimised Cornering Traction Control (if fitted)

Note:

- **All models except Tiger 1200 XR are equipped with optimised cornering Traction Control (TC).**

Optimised cornering traction control is a system designed to give the rider increased control should the traction control be activated whilst the motorcycle is leaning in a corner.

The system constantly monitors the lean angle of the motorcycle and adapts the level of traction control intervention to maintain rear wheel traction during cornering.

Warning

If the TC system is not functioning, care must be taken when accelerating and cornering on wet/slippery road surfaces to avoid rear wheel spin.

In the event of a fault, the TC disabled warning light may be accompanied by the engine management system malfunction indicator light and/or the ABS warning light.

Do not continue to ride for longer than is necessary with any of the above warning lights illuminated. Contact an authorised Triumph dealer as soon as possible to have the fault checked and rectified.

Hard acceleration and cornering in this situation may cause the rear wheel to spin resulting in loss of motorcycle control and an accident.

Warning

If a fault occurs with the optimised cornering TC system, the TC disabled warning light will illuminate and a message will be shown in the display.

In this situation, the TC system will continue to operate but without the optimised cornering function, provided that:

• There are no other faults with the TC system.

• TC has NOT been disabled by the rider (see Bike Setup on **page 50** or Riding Mode Configuration on **page 46**).

Care must be taken when accelerating and cornering on wet/slippery road surfaces to avoid rear wheel spin.

In the event of a fault, the TC disabled warning light may be accompanied by the engine management system malfunction indicator light and/or the ABS warning light.

Do not continue to ride for longer than is necessary with any of the above warning lights illuminated. Contact an authorised Triumph dealer as soon as possible to have the fault checked and rectified.

Hard acceleration and cornering in this situation may cause the rear wheel to spin resulting in loss of motorcycle control and an accident.

Note:

- **TC and optimised TC control (if fitted) may not function if there is a malfunction with the ABS system. In this situation, the warning lights for the ABS, TC and the MIL may be illuminated.**

For full details of the TC disabled warning light operation and its associated instrument warning messages, see **page 27**.

Traction Control Settings

Warning

If the traction control is disabled, the motorcycle will handle as normal but without traction control.

In this situation accelerating too hard on wet/slippery road surfaces may cause the rear wheel to slip, and may result in loss of motorcycle control and an accident.

The TC system can be disabled as described in Bike Setup on **page 50**, or set to the conditions described in Riding Mode Configuration on **page 46**.

Tyre Pressure Monitoring System (TPMS) (if fitted)

Warning

The daily check of tyre pressures must not be excluded because of the fitment of the TPMS. Check the tyre pressure when the tyres are cold and using an accurate tyre pressure gauge (see **page 196**).

Use of the TPMS system to set inflation pressures may lead to incorrect tyre pressures leading to loss of motorcycle control and an accident.

Function

Tyre pressure sensors are fitted to the front and rear wheels. These sensors measure the air pressure inside the tyre and transmit pressure data to the instruments. The sensors will not transmit data until the motorcycle reaches a speed of approximately 12 mph (20 km/h). Two dashes will be visible in the system display until the tyre pressure signal is received.

After bring the motorcycle to a stop, the sensors continue to transmit data for approximately seven minutes before switching off. The tyre pressure values remain visible in the system display until the sensors switch off.

An adhesive label will be fitted to the wheel rim to indicate the position of the tyre pressure sensor, which is near the valve.

Note:

- **The Tyre Pressure Monitoring System (TPMS) is available as an accessory kit. It must be fitted by your authorised Triumph dealer.**
- **The TPMS display on the instruments will only be activated when the system has been fitted.**

Tyre Pressure Sensor Serial Number

The serial number for the tyre pressure sensor is printed on a label attached to the sensor. This number may be required by your authorised Triumph dealer for service or diagnostics.

When the tyre pressure monitoring system is being fitted to the motorcycle, make sure that your authorised Triumph dealer records the serial numbers of the front and rear tyre pressure sensors in the spaces provided below.

Front Tyre Pressure Sensor

Rear Tyre Pressure Sensor

System Display

The tyre pressure warning light works in conjunction with the Tyre Pressure Monitoring System (TPMS).

The warning light will only illuminate when the front or rear tyre pressure is below the recommended pressure. It will not illuminate if the tyre is over inflated.

When the warning light is illuminated, the TPMS symbol indicating which is the deflated tyre and its pressure will automatically be shown in the display.

Tiger 1200 XR Only

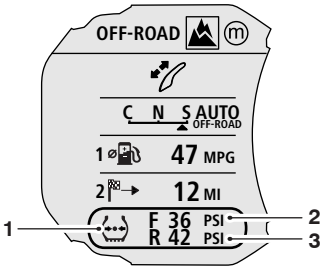

1. **TPMS symbol**
2. **Front tyre pressure indicator**
3. **Rear tyre pressure indicator**

All Models except Tiger 1200 XR

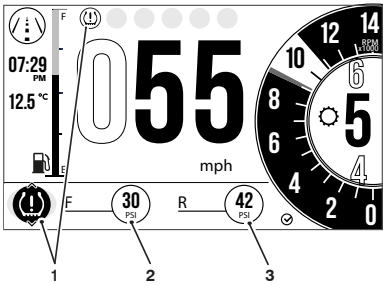

1. **Warning lights**
2. **Front tyre pressure indicator**
3. **Rear tyre pressure indicator**

The tyre pressure at which the warning light illuminates is temperature compensated to 20°C but the numeric pressure display associated with it is not. Even if the numeric display seems at or close to the standard tyre pressure when the warning light is on, a low tyre pressure is indicated and a puncture is the most likely cause.

Warning

Stop the motorcycle if the tyre pressure warning light illuminates.

Do not ride the motorcycle until the tyres have been checked and the tyre pressures are at their recommended pressure when cold.

The motorcycle information display will automatically switch to the tyre pressure display when a low tyre pressure is detected.

Dashes will be displayed in the tyre pressure display until the motorcycle reaches a speed of approximately 12 mph (20 km/h).

Sensor Batteries

When the battery voltage in a pressure sensor is low a message will be shown in the display, and the TPMS symbol or message will indicate which wheel sensor has the low battery voltage.

If the batteries are completely flat, only dashes will be shown in the display screen, the red TPMS warning light will be on and the TMPS symbol will flash continuously. A message will also be shown in the display.

Contact your authorised Triumph dealer to have the sensor replaced and the new serial number recorded in the spaces provided on **page 114**.

With the ignition switched on, if TPMS symbol flashes continuously or the TPMS warning light remains on there is a fault with the TPMS system. Contact your Triumph dealer to have the fault rectified.

TPMS System Fault

If a fault occurs with the TPMS system, the red TPMS warning light will be illuminated and the message SENSOR SIGNAL FRONT/REAR TYRE will be shown in the display. Contact your authorised Triumph dealer to have the fault rectified.

Tyre Pressures

The tyre pressures shown on your instrument panel indicate the actual tyre pressure at the time of selecting the display. This may differ from the inflation pressure set when the tyres are cold because tyres become warmer during riding, causing the air in the tyre to expand and the inflation pressure to increase. The cold inflation pressures specified by Triumph take account of this.

Only adjust tyre pressures when the tyres are cold using an accurate tyre pressure gauge (see **page 196**), and do not use the tyre pressure display on the instruments.

Warning

The Tyre Pressure Monitoring System (TPMS) is not to be used as a tyre pressure gauge when adjusting the tyre pressures. For correct tyre pressures, always check the tyre pressures when the tyres are cold and using an accurate tyre pressure gauge (see **page 196**).

Use of the TPMS system to set inflation pressures may lead to incorrect tyre pressures leading to loss of motorcycle control and an accident.

Caution

Do not use anti puncture fluid or any other item likely to obstruct air flow to the TPMS sensor's orifices. Any blockage to the air pressure orifice of the TPMS sensor during operation will cause the sensor to become blocked, causing irreparable damage to the TPMS sensor assembly.

Damage caused by the use of anti puncture fluid or incorrect maintenance is not considered a manufacturing defect and will not be covered under warranty.

Always have your tyres fitted by your authorised Triumph dealer and inform them that tyre pressure sensors are fitted to the wheel.

Low Tyre Pressure

Warning

Stop the motorcycle if the tyre pressure warning light illuminates.

Do not ride the motorcycle until the tyres have been checked and the tyre pressures are at their recommended pressure when cold.

If a low tyre pressure is detected, the tyre pressure warning light will illuminate and a message will be shown in the display (see page 66 or page 30).

Fuel

Fuel Requirement/Refuelling

Fuel Grade

Your Triumph engine is designed to use unleaded fuel and will give optimum performance if the correct grade of fuel is used. Always use unleaded fuel with a minimum octane rating of 91 RON.

In certain circumstances engine calibration may be required. Always refer to your authorised Triumph dealer.

Caution

The motorcycle can be permanently damaged if it is allowed to operate with the incorrect grade of fuel or incorrect engine calibration. Always make sure the fuel used is of the correct grade and quality. Damage caused by using the incorrect fuel or engine calibration is not considered a manufacturing defect and will not be covered under warranty.

Caution

The exhaust system for this motorcycle is fitted with a catalytic converter to help reduce exhaust emission levels. Use of leaded fuel will damage the catalytic converter. In addition, the catalytic converter can be

Caution Continued

permanently damaged if the motorcycle is allowed to run out of fuel or if the fuel level is allowed to get very low. Always make sure you have adequate fuel for your journey.

Note:

- **The use of leaded fuel is illegal in some countries, states or territories.**

Refuelling

Warning

To help reduce hazards associated with refuelling, always observe the following fuel safety instructions:

Petrol (fuel) is highly flammable and can be explosive under certain conditions. When refuelling, turn the ignition switch to the OFF position.

Do not smoke.

Do not use a mobile telephone.

Make sure the refuelling area is well ventilated and free from any source of flame or sparks. This includes any appliance with a pilot light.

Never fill the tank until the fuel level rises into the filler neck. Heat from sunlight or other sources may cause the fuel to expand and overflow creating a fire hazard.

After refuelling always check that the fuel filler cap is correctly closed.

Warning Continued

Because petrol (fuel) is highly flammable, any fuel leak or spillage, or any failure to observe the safety advice given above will lead to a fire hazard, which could cause damage to property, injury to persons or death.

Fuel Tank Cap

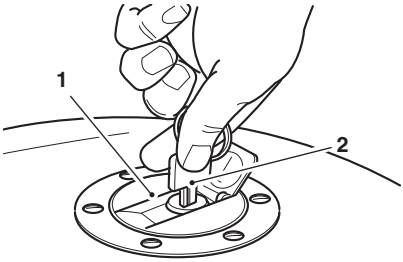

cbmm_2

1. **Fuel tank cap**
2. **Key**

To open the fuel tank cap:

- Lift up the flap covering the lock itself.
- Insert the key into the lock and turn the key clockwise.

To close and lock the cap:

- Push the cap down into place with the key inserted, until the lock clicks into place.
- Remove the key and close the key cover.

Caution

Closing the cap without the key inserted will damage the cap, tank and lock mechanism.

Filling the Fuel Tank

Warning

Overfilling the tank can lead to fuel spillage.

If fuel is spilled, thoroughly clean up the spillage immediately and dispose of the materials used safely.

Take care not to spill any fuel on the engine, exhaust pipes, tyres or any other part of the motorcycle.

Because fuel is highly flammable, any fuel leak or spillage, or any failure to observe the safety advice given above may lead to a fire hazard, which could cause damage to property and injury or death to persons.

Fuel spilled near to, or onto the tyres will reduce the tyres' ability to grip the road. This will result in a dangerous riding condition potentially causing loss of motorcycle control and an accident.

Caution

Avoid filling the tank in rainy or dusty conditions where airborne material can contaminate the fuel.

Contaminated fuel may cause damage to fuel system components.

Fill the fuel tank slowly to help prevent spillage. Do not fill the tank to a level above the bottom of the filler neck. This will make sure there is enough air space to allow for fuel expansion if the fuel inside the tank expands through absorption of heat from the engine or from direct sunlight.

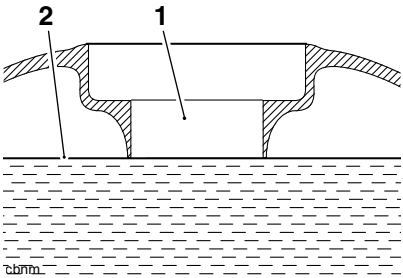

1. **Fuel filler neck**
2. **Maximum fuel level**

After refuelling always check that the fuel filler cap is correctly closed.

Windscreen

Warning

Never attempt to clean the windscreen while riding the motorcycle.

Removal of the rider's hands from the handlebars while riding the motorcycle will diminish the ability of the rider to maintain the control of the motorcycle.

Attempting to clean the windscreen while riding the motorcycle may result in loss of motorcycle control and an accident.

For windscreen cleaning information, see **page 221**.

Windscreen Adjustment

Warning

Never place loose items of clothing, fingers, hands or any other part of the body near the windscreen during adjustment.

Personal injury may result from trapping parts of the body or loose items of clothing between the windscreen and the motorcycle bodywork.

The windscreen is adjusted electronically.

Tiger 1200 XR Only

To adjust the windscreen:

- The ignition must be on. Adjustment is possible with the motorcycle stationary or in motion.
- To access the windscreen adjustment mode, from the home screen, press the SCROLL button until the windscreen adjust display is highlighted.

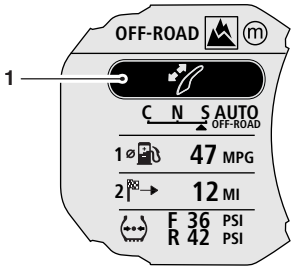

1. **Windscreen adjustment mode**

- Press the SELECT button to activate the windscreen adjustment mode.
- Use the SCROLL button to adjust the windscreen to the desired height.
- There is a short time-out period to allow for further adjustment to take place before the instruments automatically exit the windscreen adjustment mode.
- Alternatively, press the SELECT button to exit the windscreen adjustment mode.

All Models except Tiger 1200 XR

To adjust the windscreen height:

- The ignition must be on. Adjustment is possible with the motorcycle stationary or in motion.
- The windscreen height can only be adjusted from the information tray at the bottom of the display screen.
- Push the joystick left/right until the windscreen adjust option is highlighted.

Windscreen Adjustment Mode

- Push the joystick up/down to adjust the windscreen to the required height.
- Push the joystick left/right to access another tray item.

Handlebar Adjustment

Warning

It is recommended to have handlebar adjustments carried out by a trained technician of an authorised Triumph dealer.

Handlebar adjustments carried out by a technician who is not of an authorised Triumph dealer may affect the handling, stability or other aspects of the motorcycle's operation which may result in loss of motorcycle control and an accident.

Warning

Before starting work, make sure that the motorcycle is stabilised and adequately supported. This will help prevent injury to the operator or damage to the motorcycle.

Note:

- **This procedure assumes the handlebars are in the standard position, as delivered from the factory. If the handlebars have already been adjusted as described below, the bolt positions will be reversed.**

The handlebars are adjustable for reach by approximately 20 mm.

To adjust the handlebars:

- Loosen and remove the handlebar rear (8 mm threaded) clamp bolts, and then the front (10 mm threaded) clamp and riser bolts.

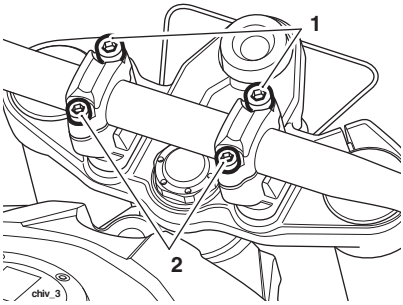

1. **10 mm bolts**
2. **8 mm bolts**

- Lift the handlebars out of the handlebar risers and support with the aid of an assistant.
- Rotate both risers through 180° and align the bolt holes.
- Reposition the handlebars to the risers.

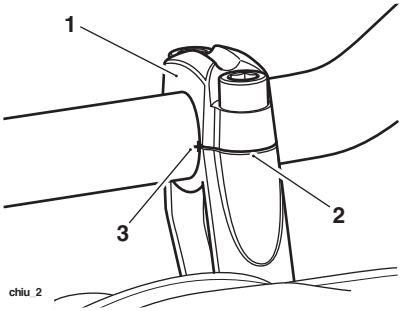

1. **Upper clamp, left hand**
2. **Clamp split line, front**
3. **Handlebar alignment mark**

- Refit the upper clamps, and secure with the two 10 mm threaded bolts in the rear bolt positions. Do not fully tighten the bolts at this stage.
- Rotate the handlebar so that the alignment marking on the handlebar aligns with the front left hand split line of the clamp riser.
- Tighten the 10 mm bolts to **35 Nm**.
- Refit the 8 mm bolts to the front positions and tighten to **26 Nm**.

Stands

Side Stand

Warning

The motorcycle is fitted with an interlock system to prevent it from being ridden with the side stand in the down position.

Never attempt to ride with the side stand down or interfere with the interlock mechanism as this will cause a dangerous riding condition leading to loss of motorcycle control and an accident.

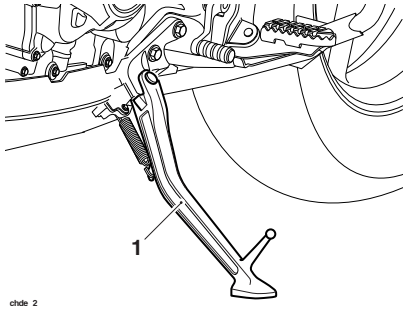

1. **Side stand**

The motorcycle is equipped with a side stand on which the motorcycle can be parked.

Before riding, always make sure that the side stand is fully up after first sitting on the motorcycle.

Note:

- **When using the side stand, always turn the handlebars fully to the left and leave the motorcycle in first gear.**

For instructions on safe parking, refer to the How to Ride the Motorcycle section.

Centre Stand (if fitted)

Caution

Do not use body panels or the seat as a hand-hold when placing the motorcycle on the centre stand as this will cause damage.

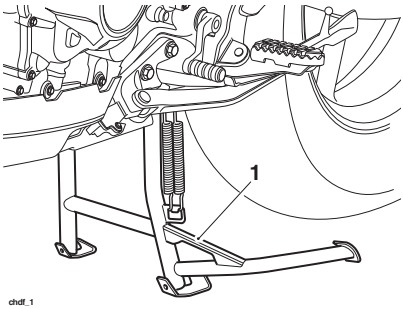

1. **Centre stand**

To set the motorcycle on the centre stand, step down firmly on the foot finder part of the stand, then lift the motorcycle up and to the rear using the rear rack as a handhold.

For instructions on safe parking, refer to the How to Ride the Motorcycle section.

Seats

Seat Care

Caution

To prevent damage to the seat or seat cover, care must be taken not to drop the seat.

Do not lean the seat against the motorcycle or any surface which may damage the seat or seat cover. Instead, place the seat, with the seat cover facing upwards, on a clean, flat surface which is covered with a soft cloth.

Do not place any item on the seat which may cause damage or staining to the seat cover.

For seat cleaning information, see **page 220**.

Passenger Seat

The seat lock is located on the rear mudguard, below the rear light unit.

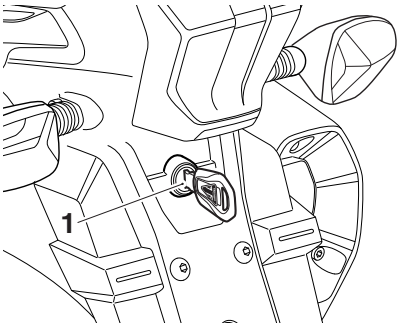

1. **Seat lock**

To remove the seat:

- Insert the ignition key into the seat lock and turn it anticlockwise while pressing down on the rear of the seat. This will release the seat from its lock and allow it to be slid rearwards.
- If equipped with heated seats, disconnect the heated seat's electrical connector for complete removal from the motorcycle.

To refit the seat:

- Reconnect the heated seat's electrical connector (if equipped), engage the seat's two outer brackets under the loops on the subframe and the two inner brackets to brackets on the rider's seat.
- Gently push the seat forwards and press down at the rear to engage in the seat lock.

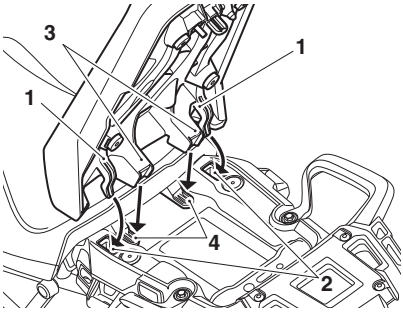

1. **Passenger seat outer brackets**
2. **Subframe loops**
3. **Passenger seat inner brackets**
4. **Rider seat brackets**

Warning

To prevent detachment of the seat during riding, after fitting always grasp the seat and pull firmly upwards.

If the seat is not correctly secured, it will detach from the lock.

A loose or detached seat could cause loss of motorcycle control and an accident.

Rider's Seat

Warning

The rider's seat is only correctly retained and supported once the passenger seat is correctly fitted.

Never ride the motorcycle with the passenger seat detached or removed, as the front seat will not be secured and may move.

A loose or detached seat could cause loss of motorcycle control and an accident.

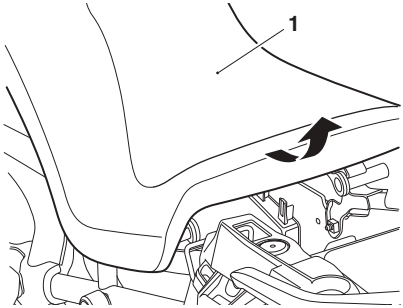

1. **Rider's seat**

To remove the rider's seat:

- Remove the passenger seat (see **page 124**).
- Grasp the rider's seat on either side, and slide it rearwards and upwards.
- If equipped with heated seats, disconnect the heated seat's electrical connector for complete removal from the motorcycle.

To refit the seat:

- Reconnect the heated seat's electrical connector (if equipped).
- Engage the seat's front rail into the bracket at the rear of the fuel tank and lower the rear rail into the rear brackets.
- Push down firmly on the rear of the seat.
- Refit the passenger seat (see **page 124**).

Rider's Seat Height Adjustment

Warning

Always adjust both seat height adjusters.

Adjusting only one height adjuster may prevent correct fitment of the seat.

Riding the motorcycle with an incorrectly fitted seat may cause loss of motorcycle control and an accident.

Warning

After adjusting the seat, operate the motorcycle in an area free from traffic to gain familiarity with the new seat position.

Riding the motorcycle with the seat in an unfamiliar position may cause loss of motorcycle control and an accident.

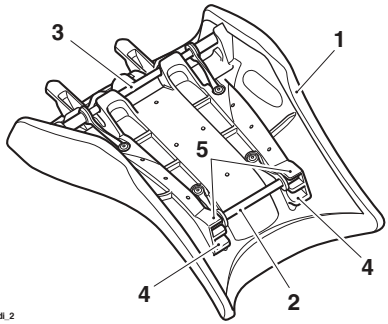

chdl_2

1. **Rider's seat**
2. **Front height adjuster**
3. **Rear height adjuster**
4. **Low seat height position (front shown)**
5. **High seat height position (front shown)**

The rider's seat is adjustable for height by approximately 20 mm.

To adjust the rider's seat:

- Remove the rider's seat (see **page 125**).
- Reposition both seat height adjusters to the higher or lower position as required. Make sure that both adjuster rails are fully engaged in their brackets on the seat.
- Refit the rider's seat (see **page 125**).

Heated Seats (if fitted)

The heated seats switches (if fitted) are located on the left hand side of the motorcycle.

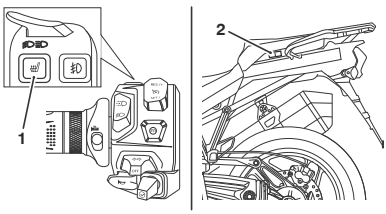

1. **Rider's heated seat switch location**
2. **Passenger's heated seat switch location**

The heated seats will only heat when the engine is running. When the heated seats are switched on, the heated seats symbol will appear in the display. The selected heat level for each seat will also be indicated by the colour of the symbol.

There are two levels of heat: low and high.

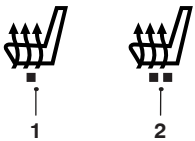

1. **Low heat symbol (amber)**
2. **High heat symbol (red)**

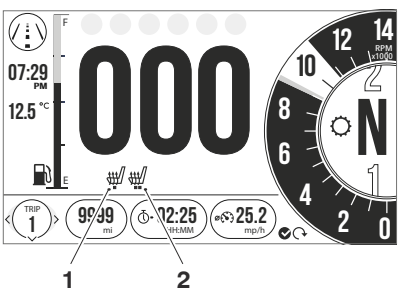

1. **Rider's heated seat (low heat selected)**
2. **Passenger's heated seat (high heat selected)**

Rider Heated Seat

- For maximum benefit in cold conditions, from the OFF position press the rider heated seat switch once for the high heat setting initially, and then reduce the heat level by pressing the rider heated seat switch again for the low heat setting when the seat has warmed up.
- To turn the rider heated seat off, press and release the rider heated seat switch until the heated seats symbol is no longer shown in the display.

Passenger Heated Seat

- For maximum benefit in cold conditions, switch the passenger heated seat switch to the high heat setting initially and then reduce the heat level by switching the passenger heated seat switch to the low heat setting when the passenger seat has warmed up.
- To turn the passenger heated seat off, move the switch to its central position. After a short delay, the passenger heated seat symbol will no longer be shown in the display.

Low Power Voltage Cut Off

If a low voltage is detected the heated seats switches will power off. The heated seats will not function again until the voltage rises to a safe level.

The switches will not power back on automatically even if the voltage rises to the safe level. The ignition must be switched off then on again to activate the heated seats.

Helmet Hook

Warning

Never ride the motorcycle with helmet(s) secured to the helmet hook.

Riding the motorcycle with helmet(s) secured to the helmet hook may cause the motorcycle to become unstable leading to loss of motorcycle control and an accident.

A helmet can be secured to the motorcycle using the helmet hook located on the left hand side of the motorcycle, beneath the rider's seat.

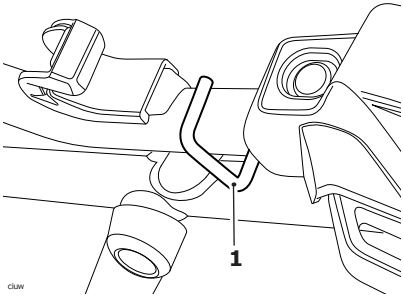

1. Helmet hook

To attach a helmet to the motorcycle:

- Remove the rider's seat (see page 125) and loop the helmet chin strap over the hook.
- To secure the helmet, refit the seat and lock into position (see page 125).

Tool Kit, Handbook and the Triumph Accessory D-Lock

The tool kit and handbook are located beneath the passenger seat.

Space is provided under the passenger seat to store a Triumph accessory D-lock (available from your Triumph dealer).

To secure the lock:

- Remove the passenger seat (see page 124).
- Release the straps and remove the handbook and tool kit.
- Position the U-section of the lock to the rear mudguard tray support features, making sure that the open end faces towards the front of the motorcycle.
- Position the lock body into the rear mudguard tray as shown below.

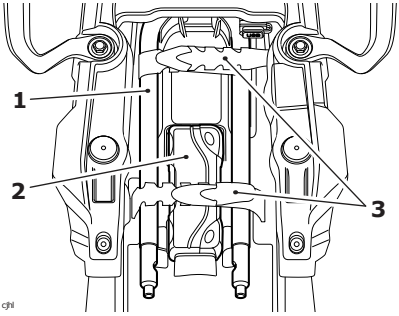

1. **Lock U-section**
2. **Lock body**
3. **Straps**

- Fit the tool kit and handbook above the D-lock and secure using the tool kit straps.
- Refit the passenger seat (see page 124).

Electrical Accessory Sockets

Caution

Do not leave electrical accessories connected to the front electrical accessory socket when the engine is not running as this will discharge the battery.

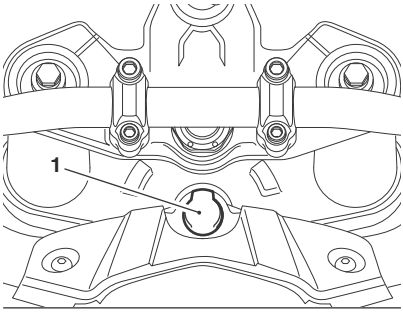

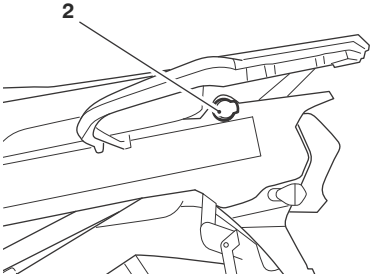

1. **Front electrical accessory socket**
2. **Rear electrical accessory socket (if fitted)**

All Models

An electrical accessory socket is provided on the motorcycle, located in front of the fuel tank.

The socket will provide a 12 Volt electrical supply and is permanently live.

Fuse number seven protects the front electrical accessory socket circuit, refer to the label in the fuse box lid for fuse amperage.

All Models Except Tiger 1200 XR

An additional electrical accessory socket is provided, located on the left side, towards the rear of the motorcycle.

The additional electrical accessory socket is available for Tiger 1200 XR models as an accessory kit from your authorised Triumph dealer.

The socket will provide a 12 Volt electrical supply and is live when the engine is running.

The rear electrical accessory socket is protected by a chassis ECM, which will automatically cut power to the socket in the event of an overload.

Power can be restored to the rear electrical accessory socket by turning the ignition switch off then on again, provided that the socket is not still overloaded.

Note:

- **To protect the battery from excessive discharge while using fitted electrical accessories, the combined total current which may be drawn through the electrical accessory sockets is five Amps.**
- **A plug, suitable for use with the accessory socket, is available from your authorised Triumph dealer.**

Universal Serial Bus (USB) Socket

Warning

The USB socket is not waterproof unless the waterproof cap is installed. Do not connect electronic devices whilst it is raining.

Water in the USB socket could lead to an electrical problem, resulting in motorcycle damage, loss of motorcycle control and an accident.

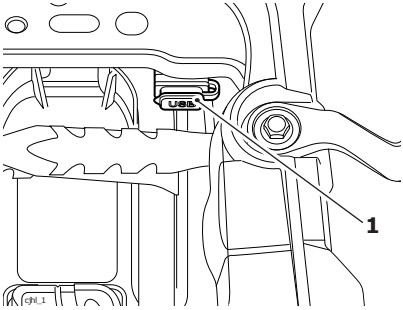

1. **USB socket**

A Universal Serial Bus (USB) socket is provided, located under the passenger seat. The connector provides a 5 Volt, 2 Amp power supply which is suitable for charging electronic devices such as mobile phones, cameras and GPS devices.

To access the USB socket:

- Remove the passenger seat.
- Remove the cap from the USB socket.
- Connect your device using a suitable USB cable, then stow the device and USB cable in the space available under the passenger seat.

Caution

Make sure that all electronic devices and cables are safely secured under the seat when riding.

Make sure there is sufficient space surrounding any electronic devices for the seat to close without causing any damage to the electronic device or the motorcycle.

- Fit the passenger seat, making sure that the device or USB cable is not trapped.
- Turn the ignition on and start the engine.

Caution

Do not leave the ignition switch in the ON position unless the engine is running as this will discharge the battery.

- When your device has finished charging, remove the passenger seat and disconnect the device.
- Refit the USB socket cap and refit the passenger seat.

Note:

- **The USB socket is protected by a chassis ECM, which will automatically cut power to the socket in the event of an overload.**
- **Power can be restored to the USB socket by turning the ignition switch off then on again, provided that the socket is not still overloaded.**

Expedition Aluminium Panniers (if fitted)

MAX LOAD
5 kg (11 lbs)

The Expedition Aluminium Panniers and mounting rails are available as an accessory option.

For more details on the Expedition Aluminium Panniers and all other luggage solutions available, contact your authorised Triumph dealer or visit www.triumph.co.uk.

Warning

Do not move or lift the motorcycle by using any part of the panniers, mounting rails or luggage system.

Damage to the motorcycle and/or personal injury may occur.

Note:

- **The same procedure can be followed to remove and mount the left hand or the right hand panniers.**
- **The pannier lock barrel has two positions as shown.**

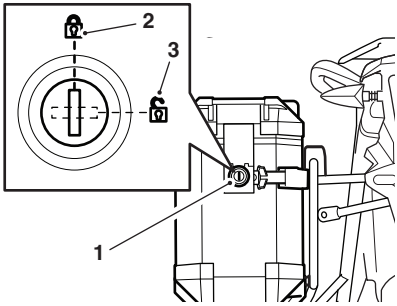

1. **Lock barrel**
2. **Lock position**
3. **Unlock position**

To Remove Each Pannier:

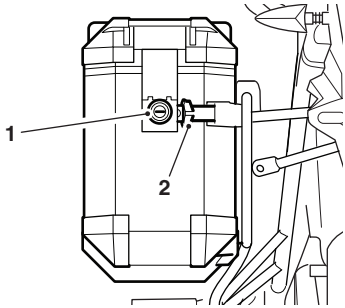

1. **Lock (left hand pannier shown)**
2. **Locking mechanism release lever**

To unlock and remove the pannier from the pannier mountings:

- Turn the key to the UNLOCK position.
- Whilst supporting the pannier, pull the locking mechanism release lever to detach the pannier from the upper mounting points.
- Lift the pannier free from the lower mounting points.

To Install Each Pannier

- Insert the key into the lock.
- Turn the key to the UNLOCK position.

Note:

- **The left hand and right hand panniers must be mounted to the correct side of the motorcycle. When mounting the panniers, make sure that the lock barrels are facing towards the rear of the motorcycle.**

- Position the pannier onto the lower pannier mounting points as shown below.

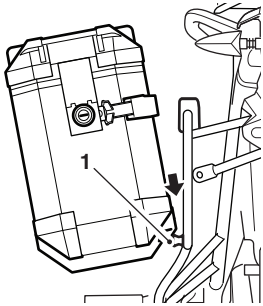

1. **Lower pannier mounting point**

- Position the pannier's locking mechanism onto the upper mounting points.
- Press the pannier inwards to engage the locking mechanism.

Note:

- **An audible click can be heard when the pannier's upper mounting locking mechanism is engaged.**
- **Two status indicators are also provided on the top of the upper mounting point. The status indicators will change colour from red to green when the locking mechanism is correctly engaged.**

Note:

- **If the status indicators remain red, the upper mounting locking mechanism is not correctly engaged.**

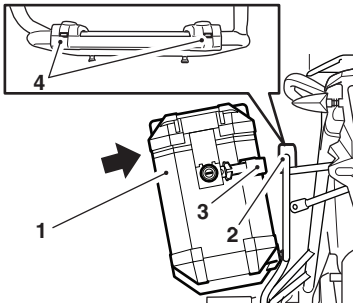

1. **Pannier**
2. **Upper mounting point**
3. **Locking mechanism**
4. **Status indicators**

- Lock the pannier to the rail by turning the key to the LOCK position.
- Remove the key.

Warning

An incorrectly mounted pannier may detach whilst riding, resulting in a dangerous riding condition.

Before riding, always make sure that both panniers are mounted correctly. Make sure that the status indicators located on the top of the pannier's upper mounting points are green and that the lock barrel is turned to the LOCK position and the key removed.

Warning Continued

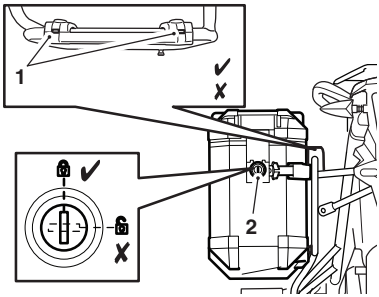

1. Locking mechanism status indicators

2. Lock barrel

A pannier that detaches whilst riding may cause loss of motorcycle control and an accident.

Pannier Operation

To unlock and open the pannier:

- Insert the key and turn it to the UNLOCK position.
- Release the pannier lid latch. The lid can then be opened.

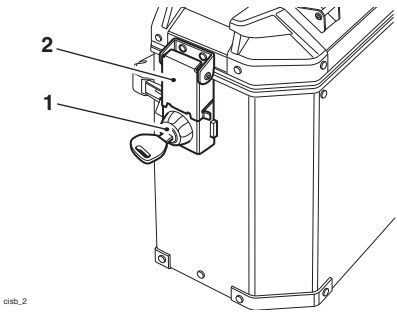

1. **Lock barrel - UNLOCK position**
2. **Pannier lid latch**

- The lid can also be removed from the pannier. To remove the lid, detach the retaining straps as shown below.

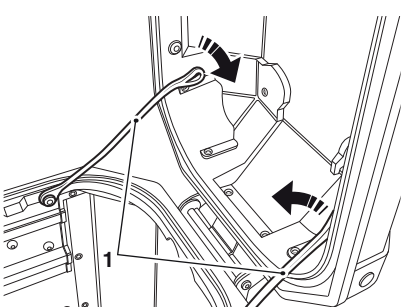

1. **Retaining straps**

- Press downwards on the quick release mechanism for the pannier lid hinge.
- Slide the lid down and to the rear to release the pannier lid hinge. The lid can now be removed from the pannier.

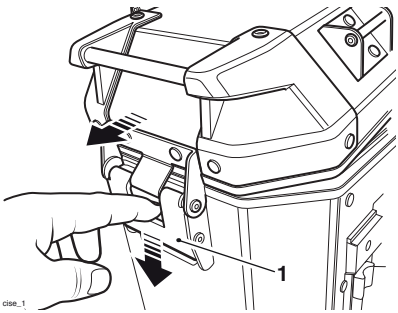

1. **Pannier lid hinge quick release mechanism**

To install the pannier lid:

- Press downwards on the quick release mechanism and relocate the pannier lid hinge.
- Release the quick release mechanism, making sure that the hinge is correctly engaged.
- Attach the retaining straps to the pannier lid.

To close and lock the pannier:

- Close the lid and secure with the pannier lid latch.
- Turn the key to the LOCK position and remove it.

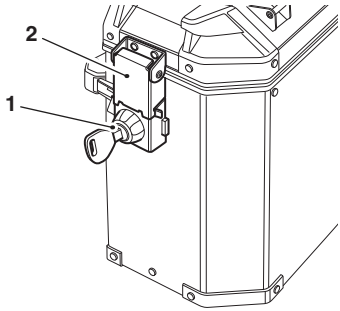

cisb_4

1. **Lock barrel - LOCK position**
2. **Pannier lid latch**

Warning

The maximum safe load for each pannier is stated on a label inside the pannier.

Never exceed this loading limit as this may cause the motorcycle to become unstable leading to loss of motorcycle control and an accident.

Warning

The Expedition Aluminium Panniers are designed to be fitted as a pair.

Never ride the motorcycle with only one pannier installed.

Riding the motorcycle with one pannier installed may cause the motorcycle to become unstable leading to loss of motorcycle control and an accident.

Warning

After fitting or removing the panniers, operate the motorcycle in a safe area free from traffic to gain familiarity with the new handling characteristics.

Operation when not familiar with the new characteristics of the motorcycle may result in loss of motorcycle control and an accident.

Warning

Incorrect loading may result in an unsafe riding condition leading to loss of motorcycle control and an accident.

Always make sure that any loads carried are evenly distributed on both sides of the motorcycle. Make sure that the load is correctly secured such that it will not move around while the motorcycle is in motion.

Evenly distribute the load within each pannier. Pack heavy items at the bottom and on the inboard side of the pannier.

Always check the load security regularly (though not while the motorcycle is in motion) and make sure that the load does not extend beyond the rear of the motorcycle. Never exceed the maximum vehicle loading weight of:

Tiger 1200 XR - 230 kg (507 lb)

Tiger 1200 XRx - 228 kg (502 lb)

Tiger 1200 XRx-LRH - 230 kg (507 lb)

Tiger 1200 XRT - 228 kg (502 lb)

Tiger 1200 XCx - 223 kg (491 lb)

Warning Continued

Tiger 1200 XCA - 224 kg (493 lb).

This maximum loading weight is made up from the combined weight of the rider, passenger, any accessories fitted and any load carried.

Warning

For models that have manually adjustable suspension, make sure that front and rear spring preload and damping settings are suitable for the loading condition of the motorcycle (see **page 192**).

Note the maximum permissible payload for the panniers is stated on a label inside the pannier.

Warning

This motorcycle must not be operated above the legal road speed limit except in authorised closed-course conditions.

Warning

Only operate this Triumph motorcycle at high speed in closed-course on-road competition or on closed-course racetracks. High-speed operation should only be attempted by riders who have been instructed in the techniques necessary for high-speed riding and are familiar with the motorcycle's characteristics in all conditions.

Warning Continued

High-speed operation in any other circumstances is dangerous and will lead to loss of motorcycle control and an accident.

Warning

Never ride an accessory-equipped motorcycle, or a motorcycle carrying a payload of any kind, at speeds above 80 mph (130 km/h). In either/both of these conditions, speeds in excess of 80 mph (130 km/h) should not be attempted even where the legal speed limit permits this.

The presence of accessories and/or payload will cause changes in the stability and handling of the motorcycle.

Failure to allow for changes in motorcycle stability may lead to loss of motorcycle control and an accident.

When riding at high speed, always be aware that various motorcycle configuration and environmental factors can adversely affect the stability of your motorcycle. For example:

• Incorrectly balanced loads on both sides of the motorcycle.

• Incorrectly adjusted front and rear suspension settings.

• Incorrectly adjusted tyre pressures.

• Excessively or unevenly worn tyres.

• Side winds and turbulence from other vehicles.

• Loose clothing.

Warning Continued

Remember that the 80 mph (130 km/h) absolute limit will reduce by the fitting of non-approved accessories, incorrect loading, worn tyres, overall motorcycle condition and poor road or weather conditions.

Running-In

cboa

Running-in is the name given to the process that occurs during the first hours of a new vehicle's operation.

In particular, internal friction in the engine will be higher when components are new. Later on, when continued operation of the engine has ensured that the components have 'bedded in', this internal friction will be greatly reduced.

A period of careful running-in will ensure lower exhaust emissions, and will optimise performance, fuel economy and longevity of the engine and other motorcycle components.

During the first 500 miles (800 km):

- Do not use full throttle;
- Avoid high engine speeds at all times;
- Avoid riding at one constant engine speed, whether fast or slow, for a long period of time;
- Avoid aggressive starts, stops, and rapid accelerations, except in an emergency;
- Do not ride at speeds greater than 3/4 of maximum speed.

From 500 to 1,000 miles (800 to 1,500 km):

- Engine speed can gradually be increased to the rev limit for short periods.

Both during and after running-in has been completed:

- Do not overrev the engine when cold;
- Do not let the engine labour. Always downshift before the engine begins to 'struggle';
- Do not ride with engine speeds unnecessarily high. Changing up a gear helps reduce fuel consumption, reduces noise and helps to protect the environment.

Daily Safety Checks

cboc

Warning

Failure to perform these checks every day before you ride may result in serious motorcycle damage or an accident causing serious injury or death.

Check the following items each day before you ride. The time required is minimal, and these checks will help make sure you have a safe, reliable ride.

If any irregularities are found during these checks, refer to the Maintenance and Adjustment section or see your authorised Triumph dealer for the action required to return the motorcycle to a safe operating condition.

Check:

Fuel: Adequate supply in tank, no fuel leaks (see **page 117**).

Engine Oil: Correct level visible at sight glass. Add correct specification oil as required. No leaks from the engine or oil cooler (see **page 175**).

Final Drive: No oil leaks (see **page 183**).

Tyres/Wheels: Correct inflation pressures (when cold). Tread depth/ wear, tyre/wheel damage, punctures etc. (see **page 195**).

Nuts, Bolts, Fasteners: Visually check that steering and suspension components, axles, and all controls are properly tightened or fastened. Inspect all areas for loose/damaged fixings.

Steering Action: Smooth but not loose from lock to lock. No binding of any of the control cables (see **page 188**).

Brakes: Pull the brake lever and push the brake pedal to check for correct resistance. Investigate any lever/pedal where the travel is excessive before meeting resistance, or if either control feels spongy in operation (see **page 184**).

ABS: Make sure that the ABS warning light does not remain illuminated at speeds above 6 mph (10 km/h) when moving off (see **page 154**).

Brake Pads: There should be more than 1.5 mm of friction material remaining on all the pads (see page 184).

Brake Fluid Levels: No brake and clutch fluid leakage. Brake fluid levels must be between the MAX and MIN marks on both reservoirs (see page 186).

Front Forks: Smooth action. No leaks from fork seals (see page 190).

Throttle: Throttle grip free play 2 - 3 mm. Make sure that the throttle grip returns to the idle position without sticking (see page 105).

Clutch Fluid Level: No brake and clutch fluid leakage. The clutch fluid level must be between the MAX and MIN marks on the reservoir (see page 182).

Coolant: No coolant leakage. Check the coolant level in the expansion tank (when the engine is cold) (see page 179).

Electrical Equipment: All lights and the horn function correctly (see page 95 and page 94).

Engine Stop: Stop switch turns the engine off (see page 144).

Stands: Returns to the fully up position by spring tension. Return springs not weak or damaged (see page 123).

This page intentionally left blank

HOW TO RIDE THE MOTORCYCLE

Table of Contents

Stopping the Engine 144
Stopping the Engine 145
Starting the Engine 146
Starting the Engine 148
Moving Off 149
Changing Gears 150
Braking 151
Anti-Lock Braking System (ABS) 154
    Optimised Cornering ABS 154
    ABS Warning Light 156
Hill Hold Control (if fitted) 157
    Activation 157
    Deactivation 158
    Hill Hold Unavailable Message 158
Parking 159
Considerations for High Speed Operation 160

Stopping the Engine

Tiger 1200 XR Only

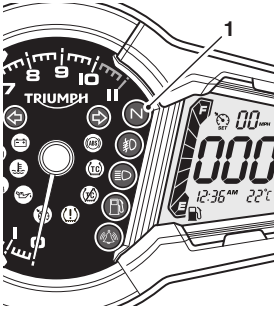

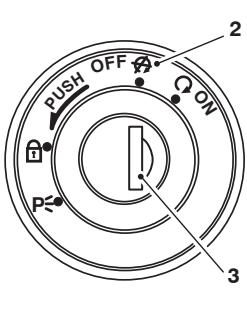

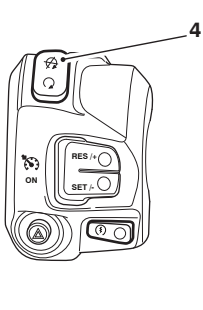

1. **Neutral indicator light**
2. **OFF position**
3. **Ignition switch**
4. **Engine stop switch - STOP position**

To stop the engine:

- Close the throttle completely.
- Select neutral.
- Turn the ignition switch off.
- Select first gear.
- Support the motorcycle on a firm, level surface with the side or centre stand.
- Lock the steering.

Caution

The engine should normally be stopped by turning the ignition switch to the OFF position.

The engine stop switch is for emergency use only.

Do not leave the ignition switched on with the engine stopped. This will cause electrical damage.

Stopping the Engine

All Models except Tiger 1200 XR

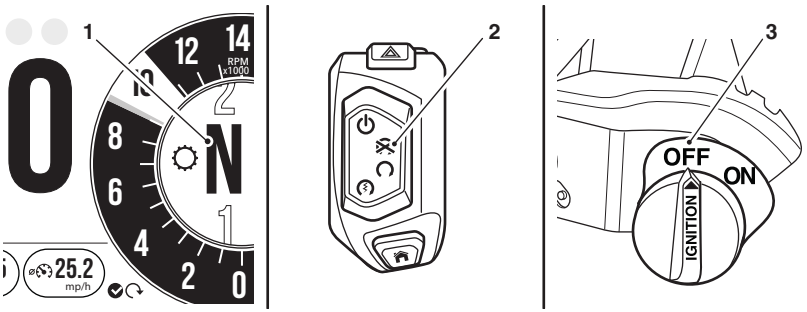

1. **Neutral indicator light**
2. **Engine stop switch - STOP position**
3. **Master ignition switch - OFF position (if fitted)**

To stop the engine:

- Close the throttle completely.
- Select neutral.
- Place the engine stop switch in the STOP position.
- Turn the master ignition switch to the OFF position (if fitted).
- Select first gear.
- Support the motorcycle on a firm, level surface with the side or centre stand.
- Lock the steering.

Caution

Do not leave the ignition switched on with the engine stopped. This will cause electrical damage.

Starting the Engine

Tiger 1200 XR

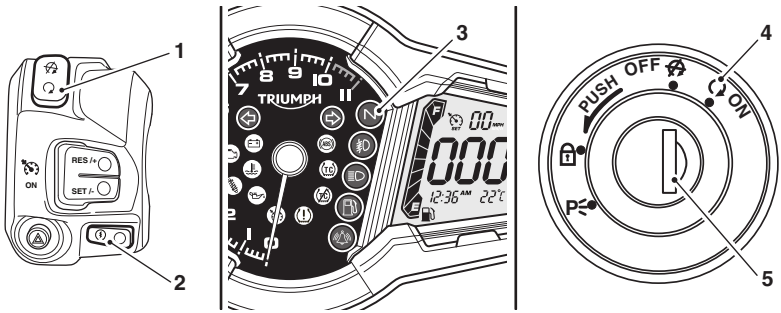

1. Engine stop switch - RUN position
2. Starter button
3. Neutral indicator light
4. ON position
5. Ignition switch

To start the engine:

- Check that the engine stop switch is in the RUN position.
- Make sure that the transmission is in neutral.
- Turn the ignition switch on.

Note:

- **When the ignition is switched on, the tachometer needle will quickly sweep from zero to maximum and then return to zero. The instrument warning lights will illuminate and will then go off (except those which normally remain on until the engine starts - see Warning Lights on page 61). It is not necessary to wait for the needle to return to zero before starting the engine.**
- **A transponder is fitted within the key to turn off the engine immobiliser. Only have one of the ignition keys near the ignition switch. Having two ignition keys near the switch may interrupt the signal between the transponder and the engine immobiliser. In this situation the engine immobiliser will remain active until one of the ignition keys is removed.**

- Pull the clutch lever fully into the handlebar.
- Leaving the throttle fully closed, push the starter button until the engine starts.

Warning

Never start the engine or run the engine in a confined area.

Exhaust fumes are poisonous and can cause loss of consciousness and death within a short period of time.

Always operate your motorcycle in the open air or in an area with adequate ventilation.

Caution

Do not operate the starter continuously for more than five seconds as the starter motor will overheat and the battery will become discharged. Wait 15 seconds between each operation of the starter to allow for cooling and recovery of battery power.

Do not let the engine idle for long periods as this may lead to overheating which will cause damage to the engine.

Caution

If the low oil pressure warning light illuminates after starting the engine, stop the engine immediately and investigate the cause.

Running the engine with low oil pressure will cause severe engine damage.

The motorcycle is equipped with starter lockout switches. The switches prevent the electric starter from operating when the transmission is not in neutral with the side stand down.

If the side stand is extended whilst the engine is running, and the transmission is not in neutral then the engine will stop regardless of clutch position.

Starting the Engine

All Models except Tiger 1200 XR

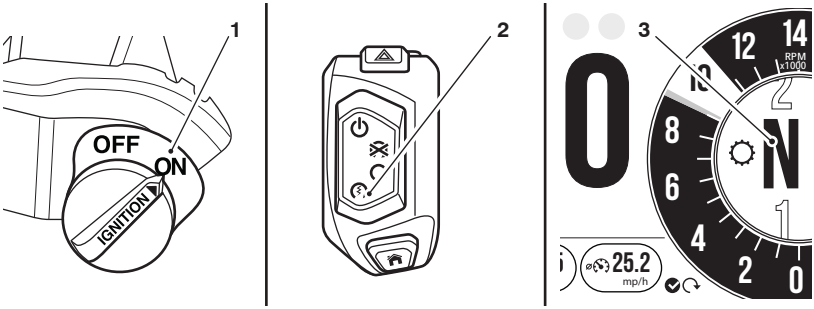

1. **Master ignition switch (if fitted)**
2. **Engine start/stop switch - QUICK START position**
3. **Neutral indicator light**

To start the engine:

- Make sure that the master ignition switch (if fitted) is turned to the ON position, see **page 95**.
- Pull the clutch lever fully into the handlebar.
- Press and hold the QUICK START position on the engine start/stop switch until the engine starts.
- Make sure that the transmission is in neutral.

The motorcycle is equipped with starter lockout switches. The switches prevent the electric starter from operating when the transmission is not in neutral with the side stand down.

If the side stand is extended whilst the engine is running, and the transmission is not in neutral then the engine will stop regardless of clutch position.

Warning

Never start the engine or run the engine in a confined area.

Exhaust fumes are poisonous and can cause loss of consciousness and death within a short period of time.

Always operate your motorcycle in the open air or in an area with adequate ventilation.

Caution

If the low oil pressure warning light illuminates after starting the engine, stop the engine immediately and investigate the cause.

Running the engine with low oil pressure will cause severe engine damage.

Note:

- **A transponder is fitted within the key to turn off the engine immobiliser. Only have one of the ignition keys near the ignition switch. Having two ignition keys near the switch may interrupt the signal between the transponder and the engine immobiliser. In this situation the engine immobiliser will remain active until one of the ignition keys is removed.**

Moving Off

Pull in the clutch lever and select first gear. Open the throttle a little and let out the clutch lever slowly. As the clutch starts to engage, open the throttle a little more, allowing enough engine speed to avoid stalling.

Changing Gears

Warning

Do not change to a lower gear at speeds that will cause excessive engine rpm (r/min). This can lock the rear wheel causing loss of motorcycle control and an accident.

Engine damage may also be caused. Changing down should be done such that low engine speeds will be ensured.

Warning

With the traction control enabled, it will limit the amount of front wheel lift and rear wheel slip.

If the traction control is not functioning or disabled, avoid opening the throttle too far or too fast in any of the lower gears as this can lead to the front wheel lifting from the ground (pulling a wheelie) and to the rear tyre breaking traction (wheel spin).

Always open the throttle cautiously, particularly if you are unfamiliar with the motorcycle, as a wheelie or loss of traction will cause loss of motorcycle control and an accident.

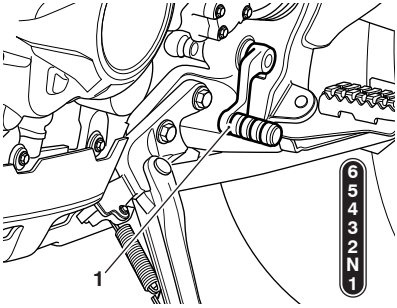

1. **Gear change pedal**

To change gears:

- Close the throttle while pulling in the clutch lever.
- Change into the next higher or lower gear.
- Open the throttle part way, while releasing the clutch lever. Always use the clutch when changing gear.
- The gear change mechanism is the positive stop type. This means that, for each movement of the gear change pedal, you can only select each gear, one after the other, in ascending or descending order.

Braking

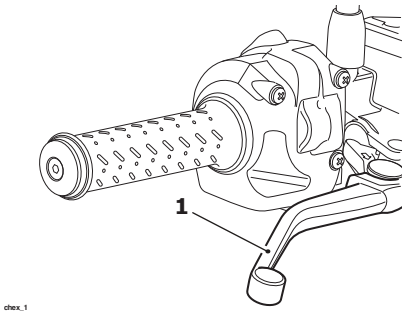

chex_1

1. **Front brake lever**

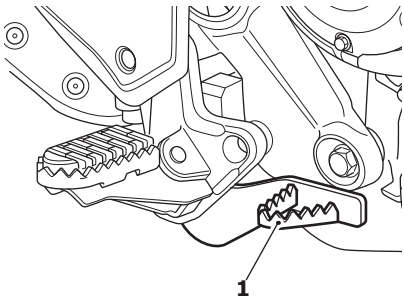

1. **Rear brake pedal**

All motorcycle models are equipped with a partially integrated braking system, combined with the Anti-lock Braking System (ABS).

The partially integrated braking system is designed to increase the braking efficiency of the rider.

When the rider applies the front brake, a small amount of rear brake is also applied, allowing for balanced braking.

The amount of rear brake application is related to the level of braking force applied by the rider through the front brake lever.

Use of the rear brake pedal alone will only apply the rear brake.

For full brake effectiveness, always operate the front brake lever and rear brake pedal together.

Warning

WHEN BRAKING, OBSERVE THE FOLLOWING:

Close the throttle completely, leaving the clutch engaged to allow the engine to help slow down the motorcycle.

Change down one gear at a time such that the transmission is in first gear when the motorcycle comes to a complete stop.

When stopping, always apply both brakes. Normally the front brake should be applied a little more than the rear.

Change down or fully disengage the clutch as necessary to keep the engine from stalling.

If the ABS is not functioning or has been disabled, never lock the brakes, as this may cause loss of motorcycle control and an accident.

Warning

For emergency braking, disregard down changing, and concentrate on applying the front and rear brakes as hard as possible without skidding. Riders should practice emergency braking in a traffic-free area (see ABS warnings below/over).

Warning Continued

Triumph strongly recommends that all riders take a course of instruction, which includes advice on safe brake operation. Incorrect brake technique could result in loss of motorcycle control and an accident.

Warning

For your safety, always exercise extreme caution when braking (whether or not ABS is fitted), accelerating or turning as any incautious action can cause loss of motorcycle control and an accident. Independent use of the front or rear brakes reduces overall braking performance. Extreme braking may cause either wheel to lock, reducing control of the motorcycle and causing an accident (see ABS warnings below).

When possible, reduce speed or brake before entering a turn as closing the throttle or braking in mid-turn may cause wheel slip leading to loss of motorcycle control and an accident.

When riding in wet or rainy conditions, or on loose surfaces, the ability to manoeuvre and stop will be reduced. All of your actions should be smooth under these conditions. Sudden acceleration, braking or turning may cause loss of motorcycle control and an accident.

For more information on optimised cornering ABS see **page 154**.

Warning

When descending a long, steep gradient or mountain pass, make use of the engine's braking effect by down changing and use both front and rear brakes intermittently.

Continuous brake application or use of the rear brake only can overheat the brakes and reduce their effectiveness leading to loss of motorcycle control and an accident.

Warning

Riding with your foot on the brake pedal or your hands on the brake lever may actuate the brake light, giving a false indication to other road users. It may also overheat the brake, reducing braking effectiveness leading to loss of motorcycle control and an accident.

Warning

Do not coast with the engine switched off, and do not tow the motorcycle. The transmission is pressure-lubricated only when the engine is running. Inadequate lubrication may cause damage or seizure of the transmission, which can lead to sudden loss of motorcycle control and an accident.

Warning

When using the motorcycle on loose, wet, or muddy roads, braking effectiveness will be reduced by dust, mud or moisture collecting on the brakes.

Always brake earlier in these conditions to ensure brake surfaces are cleaned by the braking action.

Riding the motorcycle with brakes contaminated with dust, mud or moisture may cause loss of motorcycle control and an accident.

Caution

Due to the nature of the partially integrated braking system, any attempts to spin the rear wheel whilst the front brake is applied (Burnout) will cause damage to the braking system and drivetrain.

Anti-Lock Braking System (ABS)

Warning

ABS helps prevent the wheels from locking, therefore maximising the effectiveness of the braking system in emergencies and when riding on slippery surfaces. The potentially shorter braking distances ABS allows under certain conditions are not a substitute for good riding practice.

Always ride within the legal speed limit.

Never ride without due care and attention and always reduce speed in consideration of weather, road and traffic conditions.

Take care when cornering. If the brakes are applied in a corner, ABS will not be able to counteract the weight and momentum of the motorcycle. This can result in loss of motorcycle control and an accident.

Under some circumstances it is possible that a motorcycle equipped with ABS may require a longer stopping distance than an equivalent motorcycle without ABS.

Warning

If the ABS is not functioning or has been disabled (see Bike Setup on **page 79** or Riding Mode Configuration on **page 87**), the brake system will continue to function as a non-ABS braking system.

Warning Continued

Do not continue to ride for longer than is necessary with the warning light illuminated. In the event of a fault, contact an authorised Triumph dealer as soon as possible to have the fault checked and rectified.

In this situation, braking too hard will cause the wheels to lock resulting in loss of motorcycle control and an accident.

Note:

- **Normally, the rider will perceive ABS operation as a harder feel or a pulsation of the brake lever and pedal.**
- **The ABS may be activated by sudden upward or downward changes in the road surface.**

Optimised Cornering ABS

Note:

- **All models except Tiger 1200 XR are equipped with the optimised cornering ABS.**

The optimised cornering ABS is a system designed to give the rider increased control should the ABS be activated whilst the motorcycle is leaning in a corner.

A sensor constantly monitors the lean angle of the motorcycle. If the motorcycle is leaning in a corner and the ABS is activated, the system will use the lean angle measurement to apply the ABS in a manner most suitable to help the rider maintain motorcycle control.

Warning

The optimised cornering ABS is a system designed to help the rider in emergency braking situations.

The system is designed to give the rider increased control should the ABS be activated whilst the motorcycle is leaning in a corner.

The potential increased control that the optimised cornering braking system allows under certain conditions is not a substitute for good riding practice.

Warning

Always ride within the legal speed limit.

Never ride without due care and attention and always reduce speed in consideration of weather, surface and traffic conditions.

Take care when cornering.

If the motorcycle is leaning in a corner and the ABS is activated, the optimised cornering ABS will use the lean angle measurement from a sensor to apply the ABS in a manner most suitable to help the rider maintain motorcycle control. The optimised cornering ABS

Warning Continued

will not however be able to fully counteract the weight and momentum of the motorcycle and braking too hard whilst cornering may result in loss of motorcycle control and an accident.

Under some circumstances it is possible that a motorcycle equipped with optimised cornering ABS may require a longer stopping distance than an equivalent motorcycle without ABS, or an equivalent motorcycle equipped with ABS but not equipped with optimised cornering ABS.

Warning

If the optimised cornering ABS is not functioning, the ABS warning light will illuminate and the message ABS SYSTEM - CORNERING ABS DISABLED will be displayed in the multifunction display.

In this situation, the ABS will continue to operate but without the optimised cornering function, provided that:

• There are no other ABS faults

• The ABS has not been disabled by the rider (see Bike Setup on **page 79** or Riding Mode Configuration on **page 87**).

Do not continue to ride for longer than is necessary with the warning light illuminated. In the event of a fault, contact an authorised Triumph dealer as soon as possible to have the fault checked and rectified.

In this situation, braking too hard during cornering may result in loss of motorcycle control and an accident.

ABS Warning Light

When the ignition switch is turned to the ON position, it is normal for the ABS warning light to flash on and off.

If the ABS warning light is constantly illuminated it indicates that the ABS function is not available because:

- the ABS has been disabled by the rider (see Bike Setup on **page 79** or Riding Mode Configuration on **page 87**).
- the ABS has a malfunction that requires investigation.

If the ABS warning light becomes illuminated while riding, it indicates that the ABS has a malfunction that requires investigation. One of the following warning messages may be displayed in the multifunction display:

- WARNING - ABS SYSTEM DISABLED
- ABS SYSTEM - CORNERING ABS DISABLED (models equipped with optimised cornering ABS only).

For more information on the ABS warning light, see **page 63**.

Warning

The ABS warning light will illuminate after three minutes, if the rear wheel is driven while the motorcycle is on a stand.

If the motorcycle was ridden prior to being placed on a stand, this time will reduced to one minute and the ABS warning light will be accompanied by the MIL.

Warning Continued

This reaction is normal.

When the ignition is switched off and the motorcycle is restarted, the warning light(s) will remain illuminated until the motorcycle reaches a speed exceeding 6 mph (10 km/h).

Warning

The ABS computer operates by comparing the relative speed of the front and rear wheels.

Use of non-recommended tyres can affect wheel speed and cause the ABS function not to operate, potentially leading to loss of motorcycle control and an accident in conditions where the ABS would normally function.

Hill Hold Control (if fitted)

Hill hold control assists the rider in making hill starts. The system (when activated) will apply the rear brake to hold the motorcycle in position. The system will then automatically deactivate and release the rear brake when it detects that the rider is attempting to move off.

Warning

Avoid activating the hill hold control system on slippery surfaces.

The hill hold control system will not be able to prevent the motorcycle from slipping, if it is activated on a surface where there is insufficient levels of tyre grip to hold the motorcycle in position.

Activating the hill hold control system on a slippery surface could cause the motorcycle to slip, leading to loss of motorcycle control and an accident.

Warning

The hill hold control system will deactivate if the side stand is moved to the down position, the ignition is switched off, the engine stop switch is moved to the STOP position or if the engine is stopped for any other reason.

The hill hold control system will also deactivate if a fault occurs which causes the MIL to illuminate.

In these circumstances, the front brake must be manually applied to prevent the motorcycle from rolling.

Warning Continued

Failure to prevent the motorcycle from rolling may lead to loss of motorcycle control and an accident.

Caution

The hill hold control system is not designed to be used as a parking brake.

Do not continually activate the hill hold system for periods of longer than 10 minutes.

Continuous activation of the hill hold control system for periods of longer than 10 minutes may cause damage to the ABS system.

Activation

Note:

- **The hill hold control system will not operate if there is a fault with the ABS or engine management systems and the ABS and/or MIL warning lights are illuminated.**

To activate the hill hold control system, bring the motorcycle to a stop.

For hill hold control to activate:

- The engine must be running
- The side stand must be in the up position
- The motorcycle must be stationary.

When all of the above conditions are met, squeeze the front brake lever firmly and quickly, then release. Upon releasing the lever, the message HILL HOLD ACTIVATED will appear in the multifunction display.

The hill hold control system is now active and the rear brake will be automatically applied.

The message HILL HOLD ACTIVATED will remain visible in the multifunction display until hill hold control is deactivated.

The rear brake will remain applied until:

- The system detects that the rider is attempting to move off.
- Hill hold control is manually deactivated by the rider.

Deactivation

The hill hold control system will automatically deactivate when it detects that the rider is attempting to move off. The system will progressively release the rear brake to assist the rider in moving off.

The hill hold control system can also be manually deactivated by a second firm squeeze of the front brake lever.

The message HILL HOLD DEACTIVATED will be displayed briefly in the multifunction display.

Hill Hold Unavailable Message

If when attempting to activate the hill hold control system, the message HILL HOLD UNAVAILABLE - CHECK MANUAL is displayed, this indicates one or more of the following:

- The activation conditions described on **page 157** have not been met.
- There is a fault with the ABS or engine management systems and the ABS and/or MIL warning lights are illuminated. See Warning Lights on **page 61**.

The hill hold control system can be enabled or disabled (see Bike Setup on **page 49**).

Parking

Warning

Petrol is extremely flammable and can be explosive under certain conditions. If parking inside a garage or other structure, be sure it is well ventilated and the motorcycle is not close to any source of flame or sparks. This includes any appliance with a pilot light.

Failure to follow the above advice may cause a fire resulting in damage to property or personal injury.

Warning

The engine and exhaust system will be hot after riding. DO NOT park where pedestrians and children are likely to touch the motorcycle.

Touching any part of the engine or exhaust system when hot may cause unprotected skin to become burnt.

Warning

Do not park on a soft or on a steeply inclined surface. Parking under these conditions may cause the motorcycle to fall over causing damage to property and personal injury.

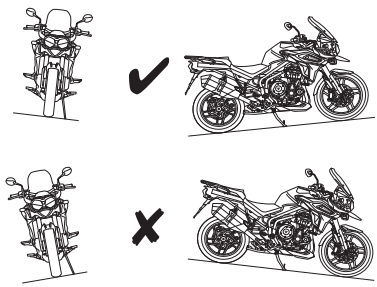

Select neutral and turn the ignition switch to the OFF position.

Lock the steering to help prevent theft.

Always park on a firm, level surface to prevent the motorcycle from falling. This is particularly important when parking off-road.

When parking on a hill, always park facing uphill to prevent the motorcycle from rolling off the stand. Engage first gear to prevent the motorcycle from moving.

On a lateral (sideways) incline, always park such that the incline naturally pushes the motorcycle towards the side stand.

Do not park on a lateral (sideways) incline of greater than 6° and never park facing downhill.

Note:

- **When parking near traffic at night, or when parking in a location where parking lights are required by law, leave the tail, licence plate and position lights on by turning the ignition switch to P (PARK) on Tiger 1200 XR models.**

For Tiger 1200 XR models, do not leave the switch in the P position for long periods of time as this will discharge the battery.

Considerations for High Speed Operation

Warning

This Triumph motorcycle should be operated within the legal speed limits for the particular road travelled.

Operating a motorcycle at high speeds can be potentially dangerous since the time available to react to given traffic situations is greatly reduced as road speed increases.

Always reduce speed in consideration of weather and traffic conditions.

Warning

Only operate this Triumph motorcycle at high speed in closed-course on-road competition or on closed-course racetracks.

High speed operation should only then be attempted by riders who have been instructed in the techniques necessary for high-speed riding and are familiar with the motorcycle's characteristics in all conditions.

High speed operation in any other circumstances is dangerous and will lead to loss of motorcycle control and an accident.

Warning

The handling characteristics of a motorcycle at high speed may vary from those you are familiar with at legal road speeds.

Do not attempt high speed operation unless you have received sufficient training and have the required skills as a serious accident may result from incorrect operation.

Warning

The listed items below are extremely important and must never be neglected. A problem, which may not be noticed at normal operating speeds, may be greatly exaggerated at high speeds.

General

Make sure that the motorcycle has been maintained according to the scheduled maintenance chart.

Steering

Check that the handlebar turns smoothly without excessive free play or tight spots. Make sure that the control cables do not restrict the steering in any way.

Luggage

Make sure that any luggage containers are closed, locked and securely fitted to the motorcycle.

Brakes

Check that the front and rear brakes are functioning properly.

Tyres

High speed operation is hard on tyres, and tyres that are in good condition are crucial to riding safely. Examine their overall condition, inflate to the correct pressure (when the tyres are cold), and check the wheel balance. Securely fit the valve caps after checking tyre pressures. Observe the information given in the Maintenance and Specification sections on tyre checking and tyre safety.

Fuel

Have sufficient fuel for the increased fuel consumption that will result from high-speed operation.

Caution

The exhaust system is fitted with a catalytic converter to help reduce exhaust emission levels.

The catalytic converter can be permanently damaged if the motorcycle is allowed to run out of fuel or if the fuel level is allowed to get very low.

Always make sure that you have adequate fuel for your journey.

Engine Oil

Make sure that the engine oil level is correct. Make sure that the correct grade and type of oil is used when topping up.

Final Drive Oil

Make sure that the final drive oil level is correct. Make sure that the correct grade and type of oil is used when topping up.

Coolant

Check that the coolant level is at the upper level line in the expansion tank. (Always check the level with the engine cold.)

Electrical Equipment

Make sure that the headlight, rear/brake light, direction indicators, horn, etc. all work properly.

Miscellaneous

Visually check that all fixings are tight.

ACCESSORIES, LOADING AND PASSENGERS

The addition of accessories and carriage of additional weight can affect the motorcycle's handling characteristics causing changes in stability and necessitating a reduction in speed. The following information has been prepared as a guide to the potential hazards of adding accessories to a motorcycle and carrying passengers and additional loads.

Warning

This motorcycle must not be operated above the legal road speed limit except in authorised closed-course conditions.

Warning

Only operate this Triumph motorcycle at high speed in closed-course, on-road competition or on closed-course racetracks. High speed operation should only then be attempted by riders who have been instructed in the techniques necessary for high speed riding and are familiar with the motorcycle's characteristics in all conditions.

High speed operation in any other circumstances is dangerous and will lead to loss of motorcycle control and an accident.

Warning

Do not move or lift the motorcycle by using any part of the luggage system or any accessories.

Warning Continued

Damage to the motorcycle and/or personal injury may occur.

Accessories

Warning

Do not install accessories or carry luggage that impairs the control of the motorcycle.

Make sure that you have not adversely affected the visibility of any lighting component, road clearance, banking capability (i.e. lean angle), control operation, wheel travel, front fork movement, visibility in any direction, or any other aspect of the motorcycle's operation.

Warning

Never ride an accessory-equipped motorcycle, or a motorcycle carrying a payload of any kind, at speeds above 80 mph (130 km/h). In either/both of these conditions, speeds in excess of 80 mph (130 km/h) should not be attempted even where the legal speed limit permits this.

The presence of accessories and/or payload will cause changes in the stability and handling of the motorcycle.

Failure to allow for changes in motorcycle stability may lead to loss of motorcycle control and an accident.

When riding at high speed, always be aware that various motorcycle configuration and environmental factors can adversely affect the stability of your motorcycle. For example:

• Incorrectly balanced loads on both sides of the motorcycle.

• Incorrectly adjusted front and rear suspension settings.

• Incorrectly adjusted tyre pressures.

• Excessively or unevenly worn tyres.

• Side winds and turbulence from other vehicles.

• Loose clothing.

Remember that the 80 mph (130 km/h) absolute limit will reduce by the fitting of non-approved accessories, incorrect loading, worn tyres, overall motorcycle condition and poor road or weather conditions.

Warning

Owners should be aware that the only approved parts, accessories and conversions for any Triumph motorcycle are those which carry official Triumph approval and are fitted to the motorcycle by an authorised dealer.

In particular, it is extremely hazardous to fit or replace parts or accessories whose fitting requires the dismantling of, or addition to, either the electrical or fuel systems and any such modification could cause a safety hazard.

The fitting of any non-approved parts, accessories or conversions may adversely affect the handling, stability or other aspect of the motorcycle operation that may result in an accident causing injury or death.

Triumph does not accept any liability whatsoever for defects caused by the fitting of non-approved parts, accessories or conversions or the fitting of any approved parts, accessories or conversions by non-approved personnel.

Loading

Warning

Incorrect loading may result in an unsafe riding condition leading to loss of motorcycle control and an accident.

Warning Continued

Always make sure that any loads carried are evenly distributed on both sides of the motorcycle. Make sure that the load is correctly secured such that it will not move around while the motorcycle is in motion.

Evenly distribute the load within each pannier. Pack heavy items at the bottom and on the inboard side of the pannier.

Always check the load security regularly (though not while the motorcycle is in motion) and make sure that the load does not extend beyond the rear of the motorcycle. Never exceed the maximum vehicle loading weight of:

Tiger 1200 XR - 230 kg (507 lb)

Tiger 1200 XRx - 228 kg (502 lb)

Tiger 1200 XRx-LRH - 230 kg (507 lb)

Tiger 1200 XRT - 228 kg (502 lb)

Tiger 1200 XCx - 223 kg (491 lb)

Tiger 1200 XCA - 224 kg (493 lb).

This maximum loading weight is made up from the combined weight of the rider, passenger, any accessories fitted and any load carried.

For models that have manually adjustable suspension, make sure that front and rear spring preload and damping settings are suitable for the loading condition of the motorcycle (see **page 192**).

Note the maximum permissible payload for the panniers is stated on a label inside the pannier.

Warning

The maximum safe load for each pannier is stated on a label inside the pannier.

Never exceed this loading limit as this may cause the motorcycle to become unstable leading to loss of motorcycle control and an accident.

Warning

The maximum safe load for the top box is stated on a label inside the top box.

Never exceed this loading limit as this may cause the motorcycle to become unstable leading to loss of motorcycle control and an accident.

Warning

Never attempt to store any items between the frame and the fuel tank. This can restrict the steering and will cause loss of motorcycle control leading to an accident.

Weight attached to the handlebar or front fork will increase the mass of the steering assembly and can result in loss of steering control leading to an accident.

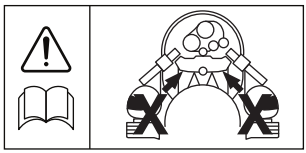

Warning

If the passenger seat is used to carry small objects, they must not exceed 5 kg (11 lbs) in weight, must not impair control of the motorcycle, must be securely attached and must not extend beyond the rear or sides of the motorcycle.

Carrying objects in excess of 5 kg (11 lbs) in weight, that are insecure, impair control or extend beyond the rear or sides of the motorcycle may lead to loss of motorcycle control and an accident.

Even if small objects are correctly loaded onto the passenger seat, the maximum speed of the motorcycle must be reduced to 80 mph (130 km/h).

Note:

- **Adjust the headlight aim to compensate for additional loads (see page 210).**

Passengers

Warning

The handling and braking capabilities of a motorcycle will be affected by the presence of a passenger. The rider must make allowances for these changes when operating the motorcycle with a passenger and should not attempt such operation unless trained to do so and without becoming familiar and comfortable with the changes in motorcycle operating characteristics that this brings about.

Motorcycle operation without making allowances for the presence of a passenger could lead to loss of motorcycle control and an accident.

Warning

Do not carry a passenger unless he or she is tall enough to reach the footrests provided.

A passenger who is not tall enough to reach the footrests will be unable to sit securely on the motorcycle and may cause instability leading to loss of motorcycle control and an accident.

Warning

Your passenger should be instructed that he or she can cause loss of motorcycle control by making sudden movements or by adopting an incorrect seated position.

The rider should instruct the passenger as follows:

• It is important that the passenger sits still while the motorcycle is in motion and does not interfere with the operation of the motorcycle.

• To keep his or her feet on the passenger footrests and to firmly hold onto the grab handles or the rider's waist or hips.

Advise the passenger to lean with the rider when travelling around corners and not to lean unless the rider does so.

Warning

The handling and braking capabilities of a motorcycle will be affected by the presence of a passenger. The rider must make allowances for these changes when operating the motorcycle with a passenger and should not attempt such operation unless trained to do so and without becoming familiar and comfortable with the changes in motorcycle operating characteristics that this brings about.

Motorcycle operation without making allowances for the presence of a passenger could lead to loss of motorcycle control and an accident.

Warning

Do not carry animals on your motorcycle.

An animal could make sudden and unpredictable movements that could lead to loss of motorcycle control and an accident

MAINTENANCE

Table of Contents

Scheduled Maintenance 171
Scheduled Maintenance Table 173
Engine Oil 175
- Engine Oil Level Inspection 175
- Engine Oil and Oil Filter Change 176
- Disposal of Used Engine Oil and Oil Filters 177
- Oil Specification and Grade 178

Cooling System 179
- Coolant Level Inspection 179
- Coolant Level Adjustment 180
- Coolant Change 180

Throttle Control 181
Clutch 182
- Clutch Fluid Level Inspection and Adjustment 182

Final Drive Unit 183
- Final Drive Oil Level Adjustment 183

Brakes 184
- Brake Wear Inspection 184
- Breaking-in New Brake Discs and Pads 184
- Brake Pad Wear Compensation 185
- Disc Brake Fluid 185
- Front Brake Fluid Level Inspection and Adjustment 186
- Rear Brake Fluid Inspection and Adjustment 187
- Brake Light 188

Steering/Wheel Bearings 188
- Steering Inspection 188
- Steering (Headstock) Bearings Inspection 189
- Wheel Bearings Inspection 189

Front Suspension 190
- Front Fork Inspection 190
- Front Suspension Adjustment 190
- Compression Damping Adjustment 191
- Rebound Damping Adjustment 191
- Front Suspension Setting Chart 192

Rear Suspension 193
- Rear Suspension Adjustment 193

Spring Preload Adjustment 193
Rebound Damping Adjustment 194
Rear Suspension Setting Chart 194
Tyres 195
Tyre Inflation Pressures 196
Tyre Wear 196
Minimum Recommended Tread Depth 197
Tyre Replacement 197
Battery 200
Battery Removal 201
Battery Disposal 202
Battery Maintenance 202
Battery Discharge 202
Battery Discharge During Storage and Infrequent Use of the Motorcycle 202
Battery Charging 203
Battery Installation 203
Fuse Boxes 204
Main Fuse 204
ABS Fuse 204
Fuse Box 205
Fuse Identification 205
Chassis Electronic Control Module (Chassis ECM) 207
Headlights 208
Daytime Running Light (DRL) (if fitted) 209
Bend Lighting (if fitted) 209
Headlight Adjustment 210
Bulb Replacement 212
Headlights 212
Front Fog Lights (if fitted) 213
Rear Light/Licence Plate Light 213
Direction Indicator Lights 213

Scheduled Maintenance

Warning

Triumph Motorcycles cannot accept any responsibility for damage or injury resulting from incorrect maintenance or improper adjustment carried out by the owner.

Since incorrect or neglected maintenance can lead to a dangerous riding condition, always have an authorised Triumph dealer carry out the scheduled maintenance of this motorcycle.

Warning

All maintenance is vitally important and must not be neglected. Incorrect maintenance or adjustment may cause one or more parts of the motorcycle to malfunction. A malfunctioning motorcycle may lead to loss of control and an accident.

Weather, terrain and geographical location affect maintenance. The maintenance schedule should be adjusted to match the particular environment in which the vehicle is used and the demands of the individual owner.

Special tools, knowledge and training are required in order to correctly carry out the maintenance items listed in the scheduled maintenance chart. Only an authorised Triumph dealer will have this knowledge and equipment.

Warning Continued

Since incorrect or neglected maintenance can lead to a dangerous riding condition, always have an authorised Triumph dealer carry out the scheduled maintenance of this motorcycle.

To maintain the motorcycle in a safe and reliable condition, the maintenance and adjustments outlined in this section must be carried out as specified in the schedule of daily checks, and also in line with the scheduled maintenance chart. The information that follows describes the procedures to follow when carrying out the daily checks and some simple maintenance and adjustment items.

Scheduled maintenance may be carried out by your authorised Triumph dealer in three ways; annual maintenance, mileage based maintenance or a combination of both, depending on the mileage the motorcycle travels each year.

1. Motorcycles travelling less than 10,000 miles (16,000 km) per year must be maintained annually. In addition to this, mileage based items require maintenance at their specified intervals, as the motorcycle reaches this mileage.
2. Motorcycles travelling approximately 10,000 miles (16,000 km) per year must have the annual maintenance and the specified mileage based items carried out together.

3. Motorcycles travelling more than 10,000 miles (16,000 km) per year must have the mileage based items maintained as the motorcycle reaches the specified mileage. In addition to this, annual based items will require maintenance at their specified annual intervals.

In all cases maintenance must be carried out at or before the specified maintenance intervals shown. Consult an authorised Triumph dealer for advice on which maintenance schedule is most suitable for your motorcycle.

Triumph Motorcycles cannot accept any responsibility for damage or injury resulting from incorrect maintenance or improper adjustment.

Scheduled Maintenance Table

Operation Description	Odometer Reading in Miles (km) or Time Period, whichever comes first					
		First Service	Annual Service	Mileage Based Service		
	Every	500 (800) 1 Month	Year	10,000 and 30,000 (16,000 and 48,000)	20,000 (32,000)	40,000 40,000 (64,000)
Lubrication						
Engine – check for leaks	Day	•	•	•	•	•
Engine oil – renew	-	•	•	•	•	•
Engine oil filter – renew	-	•	•	•	•	•
Fuel System and Engine Management						
Autoscan – carry out a full Autoscan using the Triumph diagnostic tool (print a customer copy)	-	•	•	•	•	•
Fuel system – check for leaks, chafing etc.	Day	•	•	•	•	•
Air cleaner – renew	-			•	•	•
Throttle body plate (butterfly) – check/clean	-			•	•	•
Throttle bodies – balance	-			•	•	•
Secondary air injection system – check	-				•	•
Fuel hoses – renew	Every four years, regardless of mileage					
Evaporative loss hoses – renew	Every four years, regardless of mileage					
Ignition System						
Spark plugs – check	-			•		
Spark plugs – renew	-				•	•
Cooling System						
Cooling system – check for leaks	Day	•	•	•	•	•
Coolant level – check/adjust	Day	•	•	•	•	•
Cooling system - check coolant hoses for chafing, cracks ordamage. Replace if necessary	-			•	•	•
Coolant – renew	Every 3 years, regardless of mileage					
Engine						
Clutch – check operation	Day	•	•	•	•	•
Clutch master cylinder – check for leaks	-	•	•	•	•	•
Clutch fluid levels – check	Day	•	•	•	•	•
Clutch fluid – renew	Every 2 years, regardless of mileage					
Valve clearances – check/adjust	-				•	•
Camshaft timing - check/adjust	-				•	•
Wheels and Tyres						
Wheels – inspect for damage	Day	•	•	•	•	•
Wheel bearings – check for wear/smooth operation	-	•	•	•	•	•
Wheels – check wheels for broken or damaged spokes and check spoke tightness (models with spoked wheels only)	-	•	•	•	•	•
Tyre wear/tyre damage – check	Day	•	•	•	•	•
Tyre pressures – check/adjust	Day	•	•	•	•	•

Steering and Suspension						
Steering – check for free operation	Day	•	•	•	•	•
Front and rear suspension - check for damage/leaks/ smooth operation	Day	•	•	•	•	•
Fork oil – renew	-					•
Headstock bearings – check/adjust	-		•	•	•	•
Headstock bearings – lubricate	-				•	•
Rear suspension linkage – check/lubricate	-				•	•
Brakes						
Brake pads – check wear levels	Day	•	•	•	•	•
Brake master cylinders – check for fluid leaks	Day	•	•	•	•	•
Brake calipers – check for fluid leaks and seized pistons	Day	•	•	•	•	•
Brake fluid levels – check	Day	•	•	•	•	•
Brake fluid – renew	Every 2 years, regardless of mileage					
Final Drive						
Final drive – check for oil leaks	Day	•	•	•	•	•
Final drive oil level – check	-		•	•	•	•
Final drive oil – renew – **only first service**	-	•				
Electrical						
Lights, instruments and electrical systems – check	Day	•	•	•	•	•
General						
Instruments, chassis ECM and engine ECM - check for latest calibration download using the Triumph diagnostic tool	-	•	•	•	•	•
Bank angle indicators - check for wear	Day	•	•	•	•	•
Fasteners – inspect visually for security	Day	•	•	•	•	•
Accessory rack sliding carriage – check for correct operation‡	-		•	•	•	•
Side stand – check for wear/smooth operation	Day	•	•	•	•	•
Side stand pivot pin - clean/grease	-			•	•	•
Centre stand – check for wear/smooth operation	Day	•	•	•	•	•
Centre stand flanged sleeves – check/clean/grease	-		•	•	•	•
Gear change pedal - clean bushes	-		•	•	•	•

‡Only if fitted.

Engine Oil

cbnz

Warning

Motorcycle operation with insufficient, deteriorated, or contaminated engine oil will cause accelerated engine wear and may result in engine or transmission seizure.

Seizure of the engine or transmission may lead to sudden loss of motorcycle control and an accident.

In order for the engine, transmission, and clutch to function correctly, maintain the engine oil at the correct level, and change the oil and oil filter in accordance with scheduled maintenance requirements.

Engine Oil Level Inspection

Warning

Never start the engine or run the engine in a confined area.

Exhaust fumes are poisonous and can cause loss of consciousness and death within a short period of time.

Always operate your motorcycle in the open-air or in an area with adequate ventilation.

Caution

Running the engine with insufficient engine oil will cause engine damage.

If the low oil pressure warning light remains on, stop the engine immediately and investigate the cause.

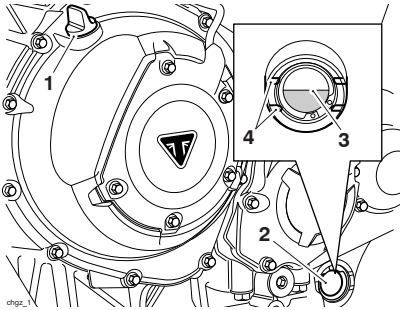

1. **Filler plug**
2. **Sight glass**
3. **Engine oil level (correct level shown)**
4. **Crankcase engine oil level lines**

To inspect the engine oil level:

- With the motorcycle upright and off the side stand, check to see if engine oil is visible in the sight glass at a point halfway between the upper (maximum) and lower (minimum) horizontal lines marked on the crankcase.
- If it is necessary to top up the engine oil level, remove the filler plug and add engine oil, a little at a time, until the level registered in the sight glass is correct. Refit and tighten the filler plug.

Note:

- **An accurate indication of the level of oil in the engine is only shown when the engine is at normal operating temperature and the motorcycle is upright (not on the side/centre stand).**

- Start the engine and run at idle for approximately five minutes.
- Stop the engine, then wait for at least three minutes for the engine oil to settle.
- Note the engine oil level visible in the sight glass.
- When correct, engine oil should be visible in the sight glass at a point halfway between the upper (maximum) and lower (minimum) horizontal lines marked on the crankcase.
- If necessary, top up the engine oil level as described earlier.
- Once the correct level is reached, fit and tighten the filler plug.

Engine Oil and Oil Filter Change

Warning

Prolonged or repeated contact with engine oil can lead to skin dryness, irritation and dermatitis.

In addition, used engine oil contains harmful contamination that can lead to skin cancer.

Always wear suitable protective clothing and avoid skin contact with used engine oil.

The engine oil and filter must be replaced in accordance with scheduled maintenance requirements.

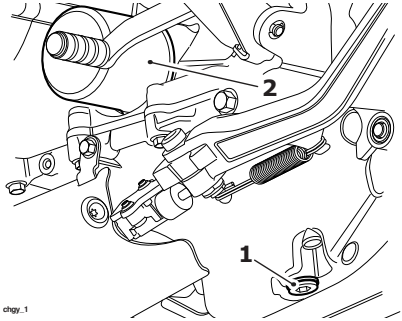

1. **Engine oil drain plug**
2. **Oil filter**

To change the engine oil and oil filter:

- Warm up the engine thoroughly, and then stop the engine and secure the motorcycle in an upright position on level ground.
- Place an oil drain pan beneath the engine.
- Remove the engine oil drain plug.

Warning

The engine oil may be hot. Contact with hot oil may cause the skin to be scalded or burned.

Always wear suitable protective clothing, gloves and eye protection and avoid skin contact with the engine oil.

- Unscrew and remove the oil filter using Triumph service tool T3880313. Dispose of the old filter in an environmentally friendly way.
- Apply a thin smear of clean engine oil to the sealing ring of the new oil filter.
- Fit the oil filter and tighten to **10 Nm**.
- After the engine oil has completely drained out, fit a new sealing washer to the engine oil drain plug.
- Fit and tighten the engine oil drain plug to **25 Nm**.
- Fill the engine with a 10W/40 or 10W/50 semi or fully synthetic motorcycle engine oil that meets specification API SH (or higher) and JASO MA, such as Castrol Power 1 Racing 4T 10W-40 (fully synthetic) engine oil, sold as Castrol Power RS Racing 4T 10W-40 (fully synthetic) in some countries.
- Start the engine and allow it to idle for a minimum of 30 seconds.

Caution

Raising the engine speed above idle before the engine oil reaches all parts of the engine can cause engine damage or seizure.

Caution Continued

Only raise engine speed after running the engine for 30 seconds to allow the engine oil to circulate fully.

Caution

If the engine oil pressure is too low, the low oil pressure warning light will illuminate.

If this light stays on when the engine is running, stop the engine immediately and investigate the cause.

Running the engine with low oil pressure will cause engine damage.

- Make sure that the low oil pressure warning light remains off after starting and the message WARNING - OIL PRESSURE LOW is not visible in the instrument's display screen.
- Stop the engine and recheck the engine oil level. Adjust if necessary.

Disposal of Used Engine Oil and Oil Filters

To protect the environment, do not pour oil on the ground, down sewers or drains, or into watercourses. Do not place used oil filters in with general waste. If in doubt, contact your local authority.

Oil Specification and Grade

Triumph's high performance fuel injected engines are designed to use 10W/40 or 10W /50 semi or fully synthetic motorcycle engine oil that meets specification API SH (or higher) and JASO MA, such as Castrol Power 1 Racing 4T 10W-40 (fully synthetic) engine oil, sold as Castrol Power RS Racing 4T 10W-40 (fully synthetic) in some countries.

Refer to the chart below for the correct oil viscosity (10W/40 or 10W/50) to be used in your riding area.

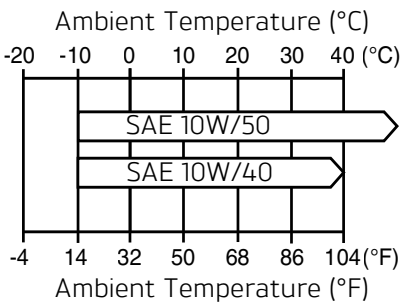

Oil Viscosity Temperature Range

Do not add any chemical additives to the engine oil. The engine oil also lubricates the clutch and any additives could cause the clutch to slip.

Do not use mineral, vegetable, non-detergent oil, castor based oils or any oil not conforming to the required specification. The use of these oils may cause instant, severe engine damage.

Make sure that no foreign matter enters the crankcase during an engine oil change or top up.

Cooling System

To ensure efficient engine cooling, check the coolant level each day before riding the motorcycle, and top up the coolant if the level is low.

Note:

- **A year round, Hybrid Organic Acid Technology (known as Hybrid OAT or HOAT) coolant is installed in the cooling system when the motorcycle leaves the factory. It is coloured green, contains a 50% solution of ethylene glycol based antifreeze, and has a freezing point of -35°C (-31°F).**

Corrosion Inhibitors

Warning

HD4X Hybrid OAT coolant contains corrosion inhibitors and antifreeze suitable for aluminium engines and radiators. Always use the coolant in accordance with the instructions of the manufacturer.

Coolant that contains anti-freeze and corrosion inhibitors contains toxic chemicals that are harmful to the human body. Never swallow antifreeze or any of the motorcycle coolant.

Note:

- **HD4X Hybrid OAT coolant, as supplied by Triumph, is premixed and does not need to be diluted prior to filling or topping up the cooling system.**

To protect the cooling system from corrosion, the use of corrosion inhibitor chemicals in the coolant is essential.

If coolant containing a corrosion inhibitor is not used, the cooling system will accumulate rust and scale in the water jacket and radiator. This will block the coolant passages, and considerably reduce the efficiency of the cooling system.

Coolant Level Inspection

Note:

- **The coolant level should be checked when the engine is cold (at room or ambient temperature).**

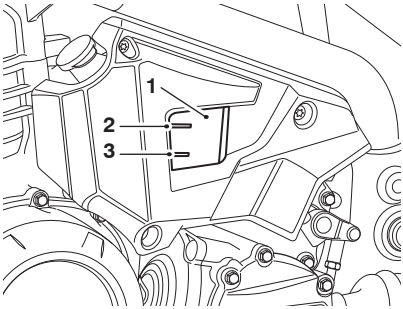

1. **Expansion tank**
2. **MAX mark**
3. **MIN mark**

To inspect the coolant level:

- Position the motorcycle on level ground and in an upright position (not on the centre stand). The expansion tank can be viewed from the left hand side of the motorcycle.
- Check the coolant level in the expansion tank. The coolant level must be between the MAX and MIN marks. If the coolant is below the minimum level, the coolant level must be adjusted.

Coolant Level Adjustment

Warning

Do not remove the expansion tank cap when the engine is hot.

When the engine is hot, the coolant inside the radiator will be hot and also under pressure.

Contact with this hot, pressurised coolant will cause scalds and skin damage.

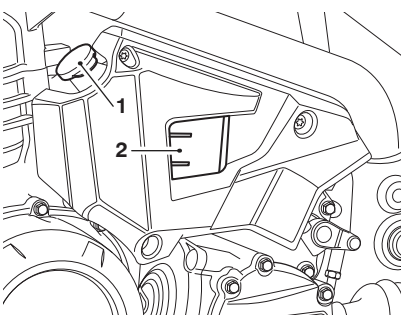

1. **Expansion tank cap**
2. **Expansion tank**

To adjust the coolant level:

- Allow the engine to cool.
- The expansion tank cap can be removed from the left hand side of the motorcycle.
- Remove the expansion tank cap from the expansion tank and add coolant mixture through the filler opening until the level reaches the MAX mark.
- Refit the expansion tank cap.

Note:

- **If the coolant level is being checked because the coolant has overheated, also check the level in the radiator and top up if necessary.**
- **In an emergency, distilled water can be added to the cooling system. However, the coolant must then be drained and replenished with HD4X Hybrid OAT coolant as soon as possible.**

Caution

If hard water is used in the cooling system, it will cause scale accumulation in the engine and radiator and considerably reduce the efficiency of the cooling system.

Reduced cooling system efficiency may cause the engine to overheat and suffer severe damage.

Coolant Change

It is recommended that the coolant is changed by an authorised Triumph dealer in accordance with scheduled maintenance requirements.

Radiator and Hoses

Warning

The fan operates automatically when the engine is running. Always keep hands and clothing away from the fan as contact with the rotating fan can cause injury.

Caution

Using high pressure water sprays, such as from a car wash facility or household pressure washer, can damage the radiator fins, cause leaks and impair the radiator's efficiency.

Do not obstruct or deflect airflow through the radiator by installing unauthorised accessories, either in front of the radiator or behind the cooling fan. Interference with the radiator airflow can cause overheating, potentially resulting in engine damage.

Check the radiator hoses for cracks or deterioration, and hose clips for tightness in accordance with scheduled maintenance requirements. Have your authorised Triumph dealer replace any defective items.

Check the radiator grille and fins for obstructions by insects, leaves or mud. Clean off any obstructions with a stream of low pressure water.

Throttle Control

Warning

Use of the motorcycle with a sticking or damaged throttle control will interfere with the throttle function resulting in loss of motorcycle control and an accident.

To avoid continued use of a sticking or damaged throttle control, always have it checked by your authorised Triumph dealer.

Inspection

Check that the throttle opens smoothly, without undue force and that it closes without sticking. Have your authorised Triumph dealer check the throttle system if a problem is detected or any doubt exists.

Check that there is 1 - 2 mm of throttle grip free play when lightly turning the throttle grip back and forth.

If there is an incorrect amount of free play, Triumph recommends that you have your authorised Triumph dealer investigate.

Clutch

The motorcycle is equipped with a hydraulically operated clutch that does not require adjustment.

Clutch Fluid Level Inspection and Adjustment

Warning

Use only DOT 4 specification brake and clutch fluid as listed in the specification section of this handbook. The use of brake and clutch fluids other than those DOT 4 fluids listed in the specification section may reduce the efficiency of the clutch system leading to an accident.

Failure to change the brake and clutch fluid at the interval specified in the scheduled maintenance chart may reduce clutch efficiency resulting in an accident.

Inspect the level of brake and clutch fluid in the reservoir and change the fluid in accordance with the scheduled maintenance requirements. Use only DOT 4 fluid as recommended in the specification section. The brake and clutch fluid must also be changed if it becomes, or is suspected of having become contaminated with moisture or any other contaminants.

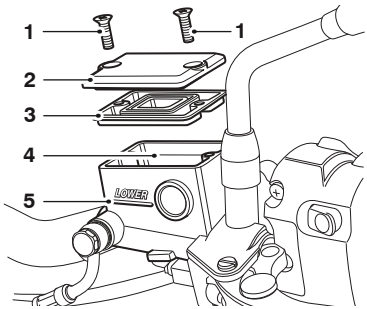

1. **Reservoir cover screws**
2. **Reservoir cover**
3. **Diaphragm seal**
4. **Upper level line**
5. **Lower level line**

The brake and clutch fluid in the reservoir must be kept between the upper and lower level lines (reservoir held horizontal).

To adjust the brake and clutch fluid level:

- Release the reservoir cover screws, then remove the reservoir cover noting the position of the diaphragm seal.
- Fill the reservoir to the upper level line using new DOT 4 fluid from a sealed container.
- Refit the reservoir cover making sure that the diaphragm seal is correctly positioned between the reservoir cover and reservoir body.
- Tighten the reservoir cover screws to **1.5 Nm**.

Final Drive Unit

Other than checking the final drive oil level, the unit contains no user serviceable parts. If a fault occurs with the final drive unit, your Triumph dealer must replace the complete assembly.

Check the final drive unit for oil leaks in accordance with the scheduled maintenance chart.

Final Drive Oil Level Adjustment

Warning

Under no circumstances should the final drive unit be disassembled.

Failure to observe this warning could lead to a malfunction of the final drive unit causing lock-up of the rear wheel leading to loss of motorcycle control and an accident.

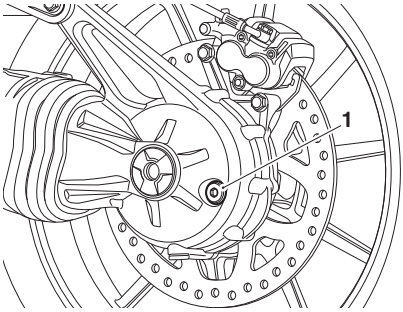

1. **Filler level plug**

To check the oil level in the final drive unit:

- Remove the filler level plug.
- Fill with 75W/90 fully synthetic hypoid oil that meets specification API Service Level GL5, such as Castrol SAF-XO fully synthetic hypoid oil, until the level of oil inside the unit is level with the bottom of the filler.
- Refit the plug and tighten to **25 Nm**.

Brakes

Brake Wear Inspection

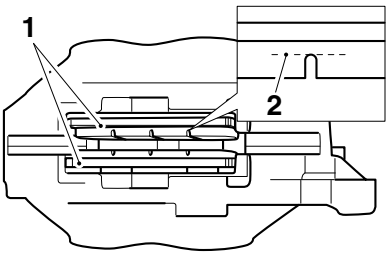

cbmz_2

1. **Brake pads**
2. **Minimum thickness line**

Brake pads must be inspected in accordance with scheduled requirements and replaced if worn to, or beyond the minimum service thickness.

If the lining thickness of any pad (front or rear brakes) is less than 1.5 mm (0.06 in), that is, if the pad has worn down to the bottom of the grooves, replace all the pads on the wheel.

Breaking-in New Brake Discs and Pads

Warning

Brake pads must always be replaced as a wheel set. At the front, where two calipers are fitted on the same wheel, replace all the brake pads in both calipers.

Replacing individual pads will reduce braking efficiency and may cause an accident.

WarningContinued

After replacement brake pads have been fitted, ride with extreme caution until the new pads have broken in.

Warning

Brake pad wear will be increased if the motorcycle is used frequently off-road. Always inspect the brake pads more frequently if the motorcycle is used off-road, and replace the brake pads before they become worn to, or beyond the minimum service thickness.

Riding with worn brake pads may reduce braking efficiency, leading to loss of motorcycle control and an accident.

Triumph recommend a period of careful breaking-in for new brake discs and pads that, if followed correctly, will optimise their performance and longevity.

The recommended distance for breaking-in new brake discs and pads is 200 miles (300 km).

During the breaking-in period, avoid extreme braking, ride with caution and allow for greater braking distances.

Brake Pad Wear Compensation

Warning

If the brake lever or pedal feels soft when it is applied, or if the lever/pedal travel becomes excessive, there may be air in the brake pipes and hoses or the brakes may be defective.

It is dangerous to operate the motorcycle under such conditions and your authorised Triumph dealer must rectify the fault before riding.

Riding with defective brakes may lead to loss of motorcycle control and an accident.

Disc and brake pad wear is automatically compensated for and has no effect on the brake lever or pedal action. There are no parts that require adjustment on the front and rear brakes.

Disc Brake Fluid

Warning

Brake fluid is hygroscopic which means it will absorb moisture from the air.

Any absorbed moisture will greatly reduce the boiling point of the brake fluid causing a reduction in braking efficiency.

Because of this, always replace brake fluid in accordance with scheduled maintenance requirements.

Warning Continued

Always use new brake fluid from a sealed container and never use fluid from an unsealed container or from one which has been previously opened.

Do not mix different brands or grades of brake fluid.

Check for fluid leakage around brake fittings, seals and joints and also check the brake hoses for splits, deterioration and damage.

Always rectify any faults before riding.

Failure to observe and act upon any of these items may cause a dangerous riding condition leading to loss of control and an accident.

Warning

If the ABS is not functioning, the brake system will continue to function as a non-ABS equipped brake system. In this situation, braking too hard will cause the wheels to lock resulting in loss of control and an accident.

Reduce speed and do not continue to ride for longer than is necessary with the indicator light illuminated. Contact an authorised Triumph dealer as soon as possible to have the fault checked and rectified.

Inspect the level of brake fluid in both reservoirs and change the brake fluid in accordance with scheduled maintenance requirements. Use only DOT 4 fluid as recommended in the

Specification section. The brake fluid must also be changed if it becomes, or is suspected of having become contaminated with moisture or any other contaminants.

Note:

- **A special tool is required to bleed the ABS braking system. Contact your authorised Triumph dealer when the brake fluid needs renewing or the hydraulic system requires maintenance.**

Front Brake Fluid Level Inspection and Adjustment

Warning

If there has been an appreciable drop in the level of the brake fluid in either brake fluid reservoir, consult your authorised Triumph dealer for advice before riding.

Riding with depleted brake fluid levels, or with a brake fluid leak is dangerous and will cause reduced brake performance potentially leading to loss of motorcycle control and an accident.

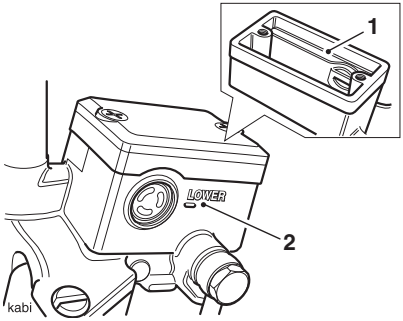

1. **Upper level line**
2. **Lower level line**

The brake fluid level in the reservoirs must be kept between the upper and lower level lines (reservoir held horizontal).

To inspect the front brake fluid level:

- Check the level of brake fluid visible in the window at the front of the reservoir body.

To adjust the front brake fluid level:

- Release the reservoir cover screws, then remove the reservoir cover noting the position of the diaphragm seal.
- Fill the reservoir to the upper level line using new DOT 4 fluid from a sealed container.
- Refit the reservoir cover making sure that the diaphragm seal is correctly positioned between the reservoir cover and reservoir body.
- Tighten the reservoir cover screws to **1.5 Nm**.

Rear Brake Fluid Inspection and Adjustment

Warning

If there has been an appreciable drop in the level of the brake fluid in either brake fluid reservoir, consult your authorised Triumph dealer for advice before riding.

Riding with depleted brake fluid levels, or with a brake fluid leak is dangerous and will cause reduced brake performance potentially leading to loss of motorcycle control and an accident.

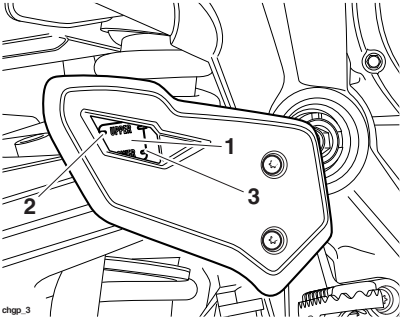

1. **Rear brake fluid reservoir**
2. **Upper level line**
3. **Lower level line**

To inspect the rear brake fluid level:

- The reservoir is visible from the right hand side of the motorcycle, through a viewing window in the rider's heel guard.

To adjust the rear brake fluid level:

- Release the screws and remove the heel guard.
- Release the reservoir cover screws, then remove the reservoir and the diaphragm seal.
- Fill the reservoir to the upper level line using new DOT 4 fluid from a sealed container.
- Refit the reservoir cover making sure that the diaphragm seal is correctly positioned between the reservoir cover and reservoir body.
- Tighten the reservoir cover screws to **1.5 Nm**.
- Refit the heel guard and tighten its screws to **7 Nm**.

Brake Light

Warning

Riding the motorcycle with defective brake lights is illegal and dangerous.

An accident causing injury to the rider and other road users may result from use of a motorcycle with defective brake lights.

The brake light is activated independently by either the front or rear brake. If, with the ignition in the ON position, the brake light does not work when the front brake lever is pulled or the rear brake pedal is pressed, have your authorised Triumph dealer investigate and rectify the fault.

Steering/Wheel Bearings

Caution

To prevent risk of injury from the motorcycle falling during the inspection, make sure that the motorcycle is stabilised and secured on a suitable support.

Do not exert extreme force against each wheel or rock each wheel vigorously as this may cause the motorcycle to become unstable and cause injury by falling from its support.

Make sure that the position of the support block will not cause damage to the sump.

Steering Inspection

Lubricate and inspect the condition of the steering (headstock) bearings in accordance with scheduled maintenance requirements.

Note:

- **Always inspect the wheel bearings at the same time as the steering bearings.**

Steering (Headstock) Bearings Inspection

Warning

Riding the motorcycle with incorrectly adjusted or defective steering (headstock) bearings is dangerous and may cause loss of motorcycle control and an accident.

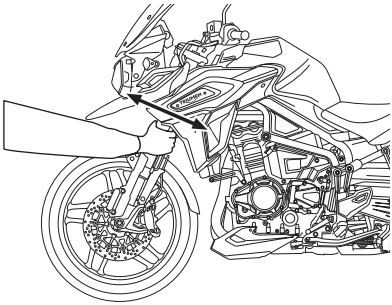

Inspecting the Steering for Free Play

To inspect the steering bearings:

- Position the motorcycle on level ground, in an upright position.
- Raise the front wheel above the ground and support the motorcycle.
- Standing at the front of the motorcycle, hold the lower end of the outer tube of the front forks as illustrated above and 'rock' with a front-to-rear motion.
- If any free play can be detected in the steering (headstock) bearings, ask your authorised Triumph dealer to inspect and rectify any faults before riding.
- Remove the support and place the motorcycle on the side stand.

Wheel Bearings Inspection

Warning

Operation with worn or damaged front or rear wheel bearings is dangerous and may cause impaired handling and instability leading to an accident.

If in doubt, have the motorcycle inspected by an authorised Triumph dealer before riding.

Note:

- **If the wheel bearings in the front or rear wheel allow play in the wheel hub, are noisy, or if the wheel does not turn smoothly, have your authorised Triumph dealer inspect the wheel bearings.**

The wheel bearings must be inspected at the intervals specified in the scheduled maintenance chart.

To inspect the wheel bearings:

- Position the motorcycle on level ground, in an upright position.
- Raise the front wheel above the ground and support the motorcycle.
- Standing at the side of the motorcycle, gently rock the top of the front wheel from side to side.
- If any free play can be detected, ask your authorised Triumph dealer to inspect and rectify any faults before riding.
- Reposition the lifting device and repeat the procedure for the rear wheel.
- Remove the support and place the motorcycle on the side stand.

Front Suspension

Front Fork Inspection

Warning

Riding the motorcycle with defective or damaged suspension is dangerous and may lead to loss of motorcycle control and an accident.

Warning

Never attempt to dismantle any part of the suspension units, as all units contain pressurised oil.

Skin and eye damage can result from contact with the pressurised oil.

Examine each fork for any sign of damage, scratching of the slider surface, or for oil leaks.

If any damage or leakage is found, consult an authorised Triumph dealer.

To check that the forks operate smoothly:

- Position the motorcycle on level ground.
- While holding the handlebars and applying the front brake, pump the forks up and down several times.
- If roughness or excessive stiffness is detected, consult your authorised Triumph dealer.

Front Suspension Adjustment

Warning

Make sure that the correct balance between front and rear suspension is maintained.

Suspension imbalance could significantly change handling characteristics leading to loss of motorcycle control and an accident.

Refer to the front and rear suspension setting charts for further information or consult your dealer.

All models except Tiger 1200 XR are equipped with Triumph Semi Active Suspension (TSAS).

For more information on TSAS settings and adjustment, see **page 110**.

Tiger 1200 XR Model

The front forks on the Tiger 1200 XR model are adjustable for compression damping and rebound damping.

Note:

- **The Tiger 1200 XR motorcycle is delivered from the factory with the front suspension set at the Solo (Normal) riding settings, as shown in the Front Suspension Setting Chart (see page 192).**

Compression Damping Adjustment

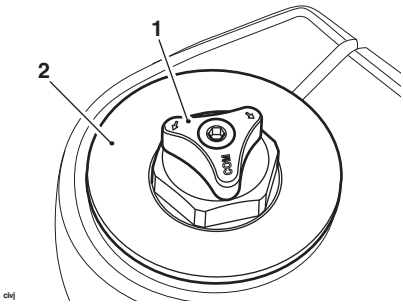

1. **Compression damping adjuster (white)**
2. **Fork top cap**

The compression damping adjuster is located at the top of the left hand fork.

To change the compression damping force rotate the (white) adjuster clockwise to increase, or anticlockwise to decrease.

Note:

- **The setting is measured as the number of adjuster clicks anticlockwise from the fully clockwise (closed) position.**

Rebound Damping Adjustment

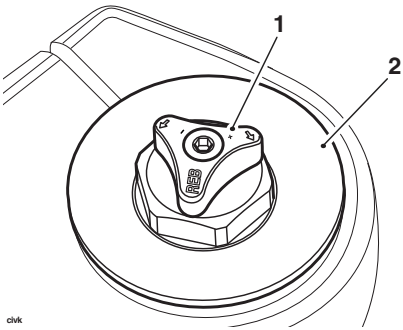

1. **Rebound damping adjuster (red)**
2. **Fork top cap**

The rebound damping adjuster is located at the top of the right hand fork.

To change the rebound damping force, rotate the (red) adjuster clockwise to increase, or anticlockwise to decrease.

Note:

- **The setting is measured as the number of adjuster clicks anticlockwise from the fully clockwise (closed) position.**

Front Suspension Setting Chart

The Solo (Normal) suspension settings provide a comfortable ride and good handling characteristics for general, solo riding. The following chart shows suggested settings for the front suspension.

Loading	Compression Damping[1] (left hand fork)	Rebound Damping[1] (right hand fork)
Solo (Normal)	17	17
Solo (Comfort)	25	25
Solo (Sport)	4	4
Solo (Off-Road)	25	25
Solo (with Loaded Luggage Items)	13	13
Rider and Passenger	12	12
Rider and Passenger (with Loaded Luggage Items)	11	11
[1] Number of clicks anticlockwise from the fully clockwise (closed) position noting that the first stop (click) is counted as 1.		

Note:

- **This chart is only a guide. Setting requirements may vary for rider weight and personal preferences. See the following pages for information regarding suspension adjustment.**

Rear Suspension

Rear Suspension Adjustment

Warning

Make sure that the correct balance between front and rear suspension is maintained.

Suspension imbalance could significantly change handling characteristics leading to loss of motorcycle control and an accident.

Refer to the front and rear suspension setting charts for further information or consult your dealer.

All models except Tiger 1200 XR are equipped with Triumph Semi Active Suspension (TSAS).

For more information on TSAS settings and adjustment, see **page 110**.

Tiger 1200 XR Model

The Rear Suspension Unit (RSU) on the Tiger 1200 XR model is adjustable for spring preload and rebound damping.

Note:

- **The Tiger 1200 XR motorcycle is delivered from the factory with the rear suspension set to the Solo (Normal) riding settings, as shown in the Rear Suspension Setting Chart (see page 194).**

Spring Preload Adjustment

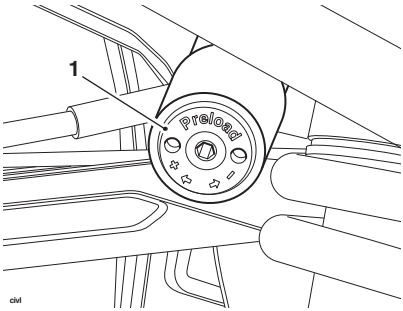

1. **Spring preload adjuster**

The spring preload adjuster is situated on the right hand side of the motorcycle, at the top of the rear suspension unit.

To adjust the spring preload setting rotate the 5 mm hexagon adjuster clockwise to increase, or anticlockwise to decrease.

Note:

- **The setting is measured as the number of adjuster turns anticlockwise from the fully clockwise (closed) position.**

Rebound Damping Adjustment

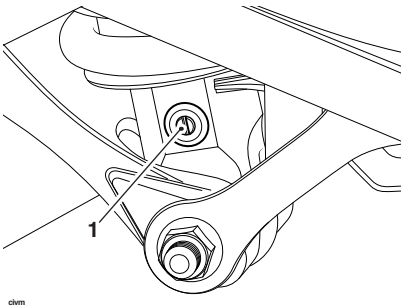

1. **Rebound damping adjuster**

The rebound damping adjuster is located at the bottom of the rear suspension unit and is accessible from left hand side of the motorcycle.

To adjust the rebound damping setting, rotate the slotted adjuster clockwise to increase, and anticlockwise to decrease.

Note:

- **The setting is measured as the number of adjuster clicks anticlockwise from the fully clockwise (closed) position.**

Rear Suspension Setting Chart

The standard suspension settings provide a comfortable ride and good handling characteristics for general, solo riding. The following chart shows suggested settings for the rear suspension.

An increase in spring preload requires firmer damping, a reduction in spring preload requires softer damping.

The damping must be adjusted to the road conditions and the spring preload.

Loading	Spring Preload[1]	Rebound Damping[2]
Solo (Normal)	17	8
Solo (Comfort)	17	12
Solo (Sport)	17	4
Solo (Off-Road)	17	4
Solo (With Loaded Luggage Items)	6	5
Rider and Passenger	0	4
Rider and Passenger (with Loaded Luggage Items)	0	3
[1] Number of turns anticlockwise from the fully clockwise (closed) position.		
[2] Number of clicks anticlockwise from the fully clockwise (closed) position noting that the first stop (click) is counted as 1.		

Note:

- **This chart is only a guide. Setting requirements may vary for rider weight and personal preferences. See the following pages for information regarding suspension adjustment.**

Tyres

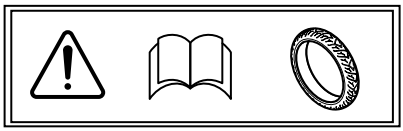

cboa

This model is equipped with tubeless tyres, valves and wheel rims. Use only tyres marked TUBELESS and tubeless valves on rims marked SUITABLE FOR TUBELESS TYRES.

Warning

Do not install tube-type tyres on tubeless rims. The bead will not seat and the tyres could slip on the rims, causing rapid tyre deflation that may result in a loss of motorcycle control and an accident. Never install an inner tube inside a tubeless tyre. This will cause friction inside the tyre and the resulting heat build-up may cause the tube to burst resulting in rapid tyre deflation, loss of motorcycle control and an accident.

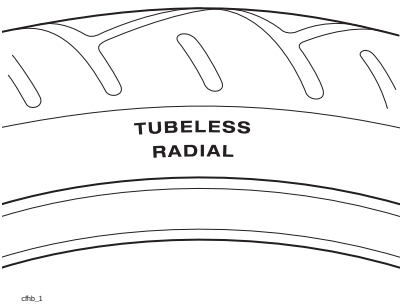

Typical Tyre Marking - Tubeless Tyre

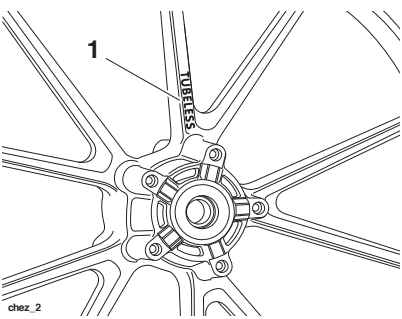

Typical Tyre Marking - Cast Wheel

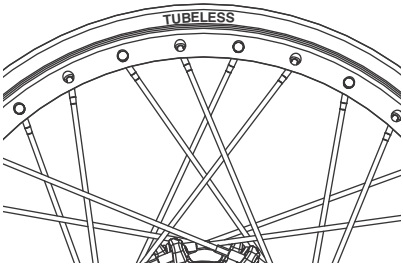

Typical Tyre Marking - Spoked Wheel

Tyre Inflation Pressures

Warning

Incorrect tyre inflation will cause abnormal tread wear and instability problems which may lead to loss of motorcycle control and an accident.

Underinflation may result in the tyre slipping on, or coming off the rim. Overinflation will cause instability and accelerated tread wear.

Both conditions are dangerous as they may cause loss of motorcycle control and an accident.

Warning

Tyre pressures which have been reduced for off-road riding will impair on-road stability. Always make sure that the tyre pressures are set as described in the Specification section for on-road use.

Operation of the motorcycle with incorrect tyre pressures may cause loss of motorcycle control and an accident.

Correct tyre inflation pressures will provide maximum stability, rider comfort and tyre life. Always check tyre pressures before riding when the tyres are cold. Check tyre pressures daily and adjust if necessary (see Specification section for correct inflation pressures). Alternatively, ask your authorised Triumph dealer to inspect your wheels and tyres.

Tyre Pressure Monitoring System (TPMS) (if fitted)

The tyre pressures shown on your instruments indicate the actual tyre pressure at the time of selecting the display. This may differ from the inflation pressure set when the tyres are cold because tyres become warmer during riding, causing the air in the tyre to expand and increase the inflation pressure. The cold inflation pressures specified by Triumph take account of this.

Owners must only adjust tyre pressures when the tyres are cold using an accurate pressure gauge, and must not use the tyre pressure display on the instruments.

Tyre Wear

As the tyre tread wears down, the tyre becomes more susceptible to punctures and failure. It is estimated that 90% of all tyre problems occur during the last 10% of tread life (90% worn). It is recommended that tyres are changed before they are worn to their minimum tread depth.

Minimum Recommended Tread Depth

In accordance with the periodic maintenance chart, measure the depth of the tread with a depth gauge, and replace any tyre that has worn to, or beyond, the minimum allowable tread depth specified in the table below:

Under 80 mph (130 km/h)	2 mm (0.08 in)
Over 80 mph (130 km/h)	Rear 3 mm (0.12 in) Front 2 mm (0.08 in)

Warning

This motorcycle must not be operated above the legal road speed limit except in authorised closed-course conditions.

Warning

Only operate this Triumph motorcycle at high speed in closed-course, on-road competition or on closed-course racetracks.

High speed operation should only then be attempted by riders who have been instructed in the techniques necessary for high speed riding and are familiar with the motorcycle's characteristics in all conditions.

High speed operation in any other circumstances is dangerous and will lead to loss of motorcycle control and an accident.

Warning

Operation with excessively worn tyres is hazardous and will adversely affect traction, stability and handling which may lead to loss of motorcycle control and an accident.

When tyres become punctured, leakage is often very slow. Always inspect tyres very closely for punctures. Check the tyres for cuts, embedded nails or other sharp objects. Operation with punctured or damaged tyres will adversely affect stability and handling which may lead to loss of motorcycle control and an accident.

Check the rims for dents or deformation and spokes for looseness and damage. Operation with damaged or defective wheels, spokes or tyres is dangerous and loss of motorcycle control and an accident could result.

Always consult your authorised Triumph dealer for tyre replacement, or for a safety inspection of the wheels, spokes and tyres.

Tyre Replacement

All Triumph motorcycles are carefully and extensively tested in a range of riding conditions to ensure that the most effective tyre combinations are approved for use on this model. It is essential that approved tyres, fitted in approved combinations, are used when purchasing replacement tyres. The use of non-approved tyres, or approved tyres in non-approved combinations,

may lead to motorcycle instability and an accident. On models fitted with ABS, different wheel speeds, caused by non-approved tyres can affect the function of the ABS computer.

See the Specification section for details of approved tyre combinations. Always have tyres fitted and balanced by your authorised Triumph dealer who has the necessary training and skills to ensure safe, effective fitment.

Tyre Pressure Monitoring System (TPMS) (if fitted)

Warning

Use of non-recommended tyres can affect wheel speed and cause the Triumph traction control function not to operate, potentially leading to loss of motorcycle control and an accident in conditions where the Triumph traction control would normally function.

Warning

The ABS computer operates by comparing the relative speed of the front and rear wheels. Use of non-recommended tyres can affect wheel speed and cause the ABS function not to operate, potentially leading to loss of motorcycle control and an accident in conditions where the ABS would normally function.

Warning

If a tyre sustains a puncture, the tyre must be replaced. Failure to replace a punctured tyre, or operation with a repaired tyre can lead to instability, loss of motorcycle control and an accident.

Warning

Do not install tube-type tyres on tubeless rims. The bead will not seat and the tyres could slip on the rims, causing rapid tyre deflation that may result in a loss of vehicle control and an accident.

Never install an inner tube inside a tubeless tyre.

This will cause friction inside the tyre and the resulting heat build-up may cause the tube to burst resulting in rapid tyre deflation, loss of motorcycle control and an accident.

Warning

If tyre damage is suspected, such as after striking the kerb, ask your authorised Triumph dealer to inspect the tyre both internally and externally. Remember, tyre damage may not always be visible from the outside.

Operation of the motorcycle with damaged tyres could lead to loss of motorcycle control and an accident.

Warning

When replacement tyres are required, consult your authorised Triumph dealer who will arrange for the tyres to be selected, in a correct combination, from the approved list and fitted according to the tyre manufacturer's instructions.

When tyres are replaced, allow time for the tyres to seat to the rim (approximately 24 hours). During this seating period, ride cautiously as an incorrectly seated tyre could cause instability, loss of motorcycle control and an accident.

Initially, the new tyres will not produce the same handling characteristics as the worn tyres and the rider must allow adequate riding distance (approximately 100 miles) to become accustomed to the new handling characteristics.

24 hours after fitting, the tyre pressures must be checked and adjusted, and the tyres examined for correct seating. Rectification must be carried out as necessary.

The same checks and adjustments must also be carried out when 100 miles have been travelled after fitting.

Use of a motorcycle with incorrectly seated tyres, incorrectly adjusted tyre pressures, or when not accustomed to its handling characteristics may lead to loss of motorcycle control and an accident.

Warning

Tyres that have been used on a rolling road dynamometer may become damaged. In some cases, the damage may not be visible on the external surface of the tyre.

Tyres must be replaced after such use as continued use of a damaged tyre may lead to instability, loss of motorcycle control and an accident.

Warning

Use of a motorcycle with incorrectly seated tyres, incorrectly adjusted tyre pressures, or when not accustomed to its handling characteristics may lead to loss of motorcycle control and an accident.

Warning

Accurate wheel balance is necessary for safe, stable handling of the motorcycle. Do not remove or change any wheel balance weights. Incorrect wheel balance may cause instability leading to loss of motorcycle control and an accident.

When wheel balancing is required, such as after tyre replacement, see your authorised Triumph dealer.

Only use self-adhesive weights. Clip-on weights may damage the wheel and tyre resulting in tyre deflation, loss of motorcycle control and an accident.

Caution

An adhesive label is fitted to the wheel rim to indicate the position of the tyre pressure sensor. Care must be taken when replacing the tyres to prevent any damage to the tyre pressure sensors.

Always have your tyres fitted by your authorised Triumph dealer and inform them that tyre pressure sensors are fitted to the wheels.

Caution

Do not use anti puncture fluid or any other item likely to obstruct air flow to the TPMS sensor's orifices. Any blockage to the air pressure orifice of the TPMS sensor during operation will cause the sensor to become blocked, causing irreparable damage to the TPMS sensor assembly.

Damage caused by the use of anti puncture fluid or incorrect maintenance is not considered a manufacturing defect and will not be covered under warranty.

Always have your tyres fitted by your authorised Triumph dealer and inform them that tyre pressure sensors are fitted to the wheels.

Battery

Warning

Under some circumstances, the battery can give off explosive gases; keep sparks, flames and cigarettes away. Provide adequate ventilation when charging or using the battery in an enclosed space.

The battery contains sulphuric acid (battery acid). Contact with skin or eyes may cause severe burns. Wear protective clothing and a face shield.

If battery acid gets on your skin, flush with water immediately.

If battery acid gets in your eyes, flush with water for at least 15 minutes and SEEK MEDICAL ATTENTION IMMEDIATELY.

If battery acid is swallowed, drink large quantities of water and SEEK MEDICAL ATTENTION IMMEDIATELY.

KEEP BATTERY ACID OUT OF THE REACH OF CHILDREN.

Warning

The battery contains harmful materials. Always keep children away from the battery whether or not it is fitted in the motorcycle.

Do not attach jump leads to the battery, touch the battery cables together or reverse the polarity of the cables as any of these actions may cause a spark which would ignite battery gases causing a risk of personal injury.

Battery Removal

Warning

Make sure that the battery terminals do not touch the motorcycle frame as this may cause a short circuit or spark, which would ignite battery gases causing a risk of personal injury.

To remove the battery:

- Remove the rider's seat.
- Remove the wing nut and remove the chassis Electronic Control Module (ECM) cover.

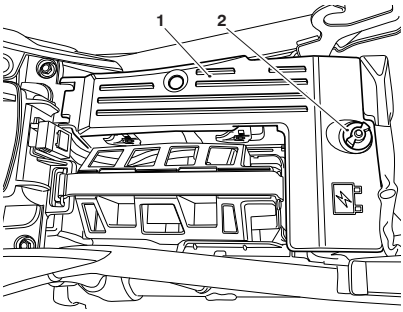

1. **Chassis ECM cover**
2. **Wing nut**

- Remove the battery strap and the battery cover.
- Disconnect the battery leads, negative (black) lead first.

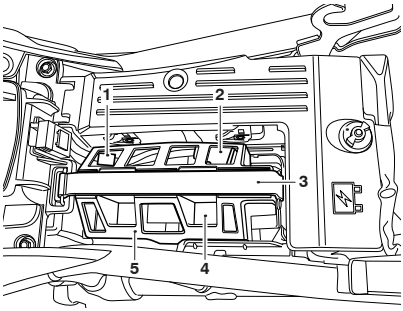

1. **Negative (black) terminal**
2. **Positive (red) terminal**
3. **Battery strap**
4. **Battery**
5. **Battery cover**

- Take the battery out of the case.

Battery Disposal

Should the battery ever require replacement, the original battery must be handed to a recycling agent who will make sure that the dangerous substances from which the battery is manufactured do not pollute the environment.

Battery Maintenance

Warning

Battery acid is corrosive and poisonous and will cause damage to unprotected skin. Never swallow battery acid or allow it to come into contact with the skin. To prevent injury, always wear eye and skin protection when handling the battery.

Clean the battery using a clean, dry cloth. Make sure that the cable connections are clean.

The battery is a sealed type and does not require any maintenance other than checking the voltage and routine recharging when required, such as during storage (see the following paragraphs).

It is not possible to adjust the battery acid level in the battery; the sealing strip must not be removed.

Battery Discharge

Caution

The charge level in the battery must be maintained to maximise battery life.

Caution Continued

Failure to maintain the battery charge level could cause serious internal damage to the battery.

Under normal conditions, the motorcycle charging system will keep the battery fully charged. However, if the motorcycle is unused, the battery will gradually discharge due to a normal process called self discharge; the clock, Engine Control Module (ECM) memory, high ambient temperatures, or the addition of electrical security systems or other electrical accessories will all increase this rate of battery discharge. Disconnecting the battery from the motorcycle during storage will reduce the rate of discharge.

Battery Discharge During Storage and Infrequent Use of the Motorcycle

During storage or infrequent use of the motorcycle, inspect the battery voltage weekly using a digital multimeter. Follow the manufacturer's instructions supplied with the meter.

Should the battery voltage fall below 12.7 Volts, the battery should be charged.

Allowing a battery to discharge or leaving it discharged for even a short period of time causes sulphation of the lead plates. Sulphation is a normal part of the chemical reaction inside the battery, however over time the sulphate

can crystallise on the plates making recovery difficult or impossible. This permanent damage is not covered by the motorcycle warranty, as it is not due to a manufacturing defect.

Keeping the battery fully charged reduces the likelihood of it freezing in cold conditions. Allowing a battery to freeze will cause serious internal damage to the battery.

Battery Charging

Warning

The battery gives off explosive gases; keep sparks, flames and cigarettes away. Provide adequate ventilation when charging or using the battery in an enclosed space.

The battery contains sulphuric acid (battery acid). Contact with skin or eyes may cause severe burns. Wear protective clothing and a face shield.

If battery acid gets on your skin, flush with water immediately.

If battery acid gets in your eyes, flush with water for at least 15 minutes and SEEK MEDICAL ATTENTION IMMEDIATELY.

If battery acid is swallowed, drink large quantities of water and SEEK MEDICAL ATTENTION IMMEDIATELY.

KEEP BATTERY ACID OUT OF THE REACH OF CHILDREN.

Caution

Do not use an automotive quick charger as it may overcharge and damage the battery.

For help with selecting a battery charger, checking the battery voltage or battery charging, contact your local authorised Triumph dealer.

Should the battery voltage fall below 12.7 Volts, the battery should be charged using a Triumph approved battery charger. Always remove the battery from the motorcycle and follow the instructions supplied with the battery charger.

For extended periods of storage (beyond two weeks) the battery should be removed from the motorcycle and kept charged using a Triumph approved maintenance charger.

Similarly, should the battery charge fall to a level where it will not start the motorcycle, remove the battery from the motorcycle before charging.

Battery Installation

Warning

Make sure that the battery terminals do not touch the motorcycle frame as this may cause a short circuit or spark, which would ignite battery gases causing a risk of personal injury.

To install the battery:

- Place the battery in the battery case.
- Reconnect the battery, positive (red) lead first.
- Apply a light coat of grease to the terminals to prevent corrosion.
- Cover the positive terminal with the protective cap.
- Refit the battery strap.
- Refit the chassis ECM cover and secure with the wing nut. Tighten the wing nut to **1.25 Nm**.
- Refit the rider's seat.

Note:

- **After reconnecting the battery, it is necessary to allow the TSAS system (if equipped) to recalibrate, see page 110.**

Fuse Boxes

Warning

Always replace blown fuses with new ones of the correct rating (as specified on the fuse box cover) and never use a fuse of higher rating.

Use of an incorrect fuse could lead to an electrical problem, resulting in motorcycle damage, loss of motorcycle control and an accident.

Main Fuse

The 40 Amp main fuse is located beneath the rider's seat and behind the seat bridge.

To access the main fuse, the rider's seat must be removed.

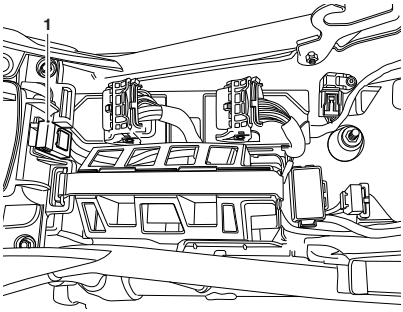

1. Main fuse

ABS Fuse

The 40 Amp ABS fuse is located beneath the rider's seat and behind the main fuse box.

To access the ABS fuse box, the rider's seat and chassis ECM cover must be removed.

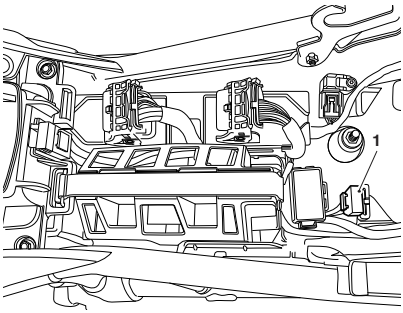

1. **ABS fuse box**

Fuse Box

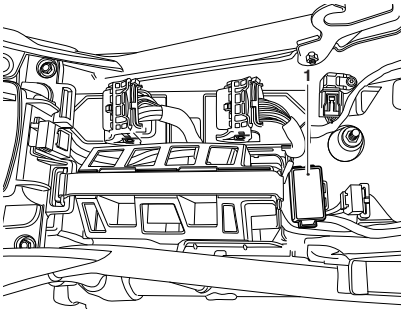

1. **Fuse box**

The fuse box that contains all other fuses is located beneath the rider's seat.

To access the fuse box, the rider's seat and chassis ECM cover must be removed.

Fuse Identification

A blown fuse is indicated when all of the systems protected by that fuse become inoperative. When checking for a blown fuse, use the tables to establish which fuse has blown.

The fuse identification numbers listed in the tables correspond with those printed on the fuse box cover, as shown below.

Spare fuses are located on the inside of the fuse box cover and should be replaced if used.

Tiger 1200 XR Only

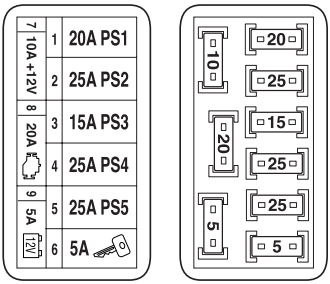

Fuse Box and Cover

Position	Circuit Protected	Rating (Amps)
1	PS1	20
2	PS2	25
3	PS3	15
4	PS4	25
5	PS5	25
6	Ignition	5
7	Front Accessory Socket	10
8	Engine Management	20
9	Instruments	5

Note:

- **Refer to the table on page 207 for details of the systems protected by fuses PS1 to PS5.**

All Models except Tiger 1200 XR

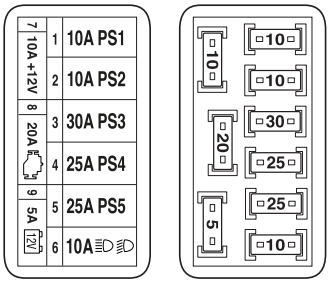

Fuse Box and Cover

Position	Circuit Protected	Rating (Amps)
1	PS1	10
2	PS2	10
3	PS3	30
4	PS4	25
5	PS5	25
6	Headlights	10
7	Front Accessory Socket	10
8	Engine Management	20
9	Instruments and Electronic Steering Lock (ESL)	5

Note:

- **Refer to the table on page 207 for details of the systems protected by fuses PS1 to PS5.**

Chassis Electronic Control Module (Chassis ECM)

Warning

Always replace blown fuses with new ones of the correct rating (as specified on the fuse box cover) and never use a fuse of higher rating.

Use of an incorrect fuse could lead to an electrical problem, resulting in motorcycle damage, loss of motorcycle control and an accident.

Many of the motorcycle's electrical systems (such as lighting, TSAS if fitted, horn, cooling fan, fuel pump, and accessories such as heated grips or seats) are controlled by a Chassis Electronic Control Module (Chassis ECM).

The chassis ECM provides a primary level of protection to the electrical systems it controls. If a fault is detected, the chassis ECM will automatically cut power to the affected system.

The chassis ECM can be reset by turning the Ignition off then on again. Power will be restored to the inoperative system, providing that the condition that caused the fault has been rectified.

The systems controlled by the chassis ECM are also provided with a secondary level of protection, by fuses PS1 to PS5 in the main fuse box (see page 205). A blown fuse is likely when all of the systems protected by that fuse become inoperative.

Refer to the following table for full details of the chassis ECM controlled systems, and their corresponding fuses.

Electrical System	Fuse
Left headlight main beam (Tiger 1200 XR only)	PS1
Left headlight dipped beam (Tiger 1200 XR only)	
Left front direction indicator	
Left rear direction indicator	
Rear position light	
RSU position sensor (models with TSAS only)	
Right headlight main beam (Tiger 1200 XR only)	PS2
Right headlight dipped beam (Tiger 1200 XR only)	
Right front direction indicator	
Right rear direction indicator	
Front position light (Tiger 1200 XR only)	
Brake light	
Ignition (All models except Tiger 1200 XR)	

Electrical System	Fuse
Windscreen adjustment motor	PS3
RSU preload adjustment motor (models with TSAS only)	
RSU damping solenoid (models with TSAS only)	
Front suspension compression damping adjustment motor (models with TSAS only)	
Front suspension rebound damping adjustment motor (models with TSAS only)	
Fog lights (if fitted)	
USB connector	
Heated seats (if fitted)	PS4
Heated grips (if fitted)	
Rear electrical accessory socket (if fitted)	
Top box electrical accessory socket (if fitted)	
Cooling fan	PS5
Fuel pump	
Starter solenoid	
Horn	

If after resetting the automatic software protection system or replacing a blown fuse, a fault still persists, contact an authorised Triumph dealer to have the fault checked and rectified.

Headlights

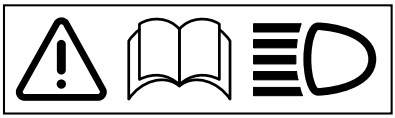

Warning

Adjust road speed to suit the visibility and weather conditions in which the motorcycle is being operated.

Make sure that the beams are adjusted to illuminate the road surface sufficiently far ahead without dazzling oncoming traffic. An incorrectly adjusted headlight may impair visibility causing an accident.

Warning

Never attempt to adjust a headlight beam when the motorcycle is in motion.

Any attempt to adjust a headlight beam when the motorcycle is in motion may result in loss of motorcycle control and an accident.

Caution

Do not cover the headlight or lens with any item likely to obstruct air flow to, or prevent heat escaping from, the headlight lens.

Caution Continued

Covering the headlight lens during operation with items of clothing, luggage, adhesive tape, devices intended to alter or adjust the headlight beam or non genuine headlight lens covers will cause the headlight lens to overheat and distort, causing irreparable damage to the headlight assembly.

Damage caused by overheating is not considered a manufacturing defect and will not be covered under warranty.

If the headlight must be covered during use – such as taping of the headlight lens required during closed-course conditions – the headlight must be disconnected.

All Models except Tiger 1200 XR

Caution

If a fault occurs with the headlight unit, then a message will be shown in the instrument display and the headlights will only be available in the dipped beam mode.

Contact an authorised Triumph dealer as soon as possible to have the fault checked and rectified.

Daytime Running Light (DRL) (if fitted)

The Daytime Running Light (DRL) is situated within the headlight assembly and is a sealed, maintenance-free LED unit. The headlight unit must be replaced in the event of the failure of the DRL.

Bend Lighting (if fitted)

Bend lighting provides additional LED lighting for left and right turns when riding the motorcycle. It compensates for the bank angle of the motorcycle when cornering in dip beam mode.

The bend lights are switched on and off automatically as the motorcycle leans through corners. The left hand and right hand bend light comprises of four separate lights which switch on and increase in brightness depending on the lean angle of the motorcycle. When the motorcycle is stationary, no bend lights are on.

Headlight Adjustment

Tiger 1200 XR Only

The headlights can be adjusted by means of vertical and horizontal adjustment screws located on the rear of each headlight. In addition, the headlight unit is equipped with an easily accessible adjuster to allow the vertical adjustment to be corrected when the motorcycle is fully loaded.

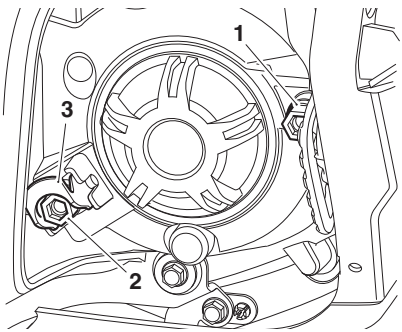

1. **Horizontal adjustment screw**
2. **Vertical adjustment screw**
3. **Headlight adjuster lever for loaded conditions**

To adjust the headlight:

- Switch the headlight dipped beam on.
- Turn the vertical adjustment screw on the headlight clockwise to raise the beam or anticlockwise to lower the beam.
- Turn the horizontal adjustment screw clockwise to move the beam to the right or anticlockwise to move the beam to the left.
- Switch the headlights off when the beam settings are satisfactory.

Headlight Adjustment Lever for Loaded Conditions

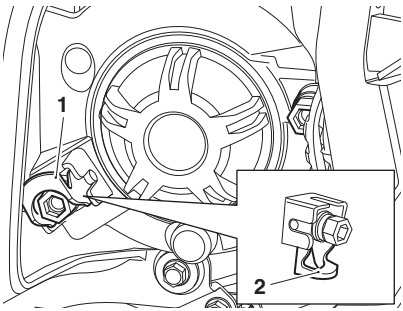

1. **Headlight adjuster lever (unloaded position)**
2. **Headlight adjuster lever (loaded position)**

For normal (unloaded) conditions the headlight adjuster lever should be set in the horizontal position (1).

For loaded conditions rotate the headlight adjuster downwards until it stops (2). This will lower the headlight beams by approximately 2°.

All Models except Tiger 1200 XR

The headlight can be adjusted by means of a vertical adjustment screw located on the rear of the headlight unit. There is no horizontal adjustment. In addition, the headlight is equipped with an easily accessible adjuster to allow the vertical adjustment to be corrected when the motorcycle is fully loaded.

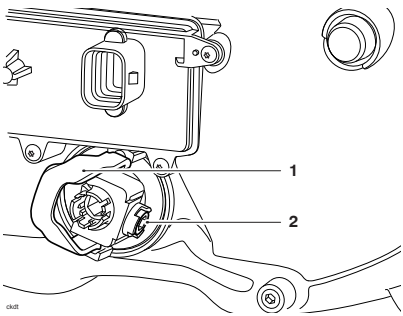

1. **Headlight adjuster lever for loaded conditions**
2. **Vertical adjustment screw**

To adjust the headlight:

- Switch the headlight dipped beam on.
- Turn the vertical adjustment screw on the headlight unit clockwise to raise the beam or anticlockwise to lower the beam.

Note:

- **There is a small triangle marking on each side of the headlight unit which indicates the height of the light within the headlight unit for adjustment purposes.**
- Switch the headlights off when the beam settings are satisfactory.

Headlight Adjustment for Loaded Conditions

The headlight unit is equipped with an adjuster lever to allow the vertical adjustment to be corrected when the motorcycle is fully loaded.

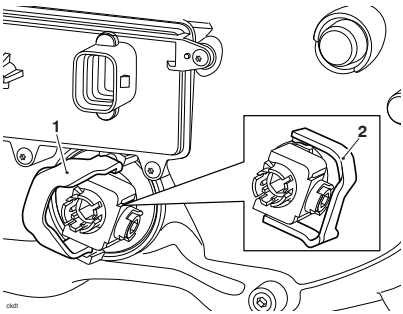

1. **Headlight adjuster lever (loaded position)**
2. **Headlight adjuster lever (unloaded position)**

For normal (unloaded) conditions, the headlight adjuster lever should be set in the horizontal position (1).

For loaded conditions, move the headlight adjuster lever until it is in position (2). This will lower the headlight beams by approximately 2°.

Bulb Replacement

Caution

The use of non-approved bulbs may result in damage to lenses and other lighting unit components.

In addition, the use of bulbs of incorrect wattage may cause the chassis ECM to cut power to affected lighting circuits.

Use genuine Triumph supplied bulbs as specified in the Triumph Parts Catalogue.

Always have replacement bulbs installed by an authorised Triumph dealer.

Headlights

All Models except Tiger 1200 XR

The headlight unit is a sealed, maintenance-free LED unit.

Tiger 1200 XR Only

Warning

The bulbs become hot during use. Always allow sufficient time for the bulb to cool before handling. Avoid touching the glass part of the bulb. If the glass is touched or gets dirty, clean with alcohol before reuse.

The headlight unit does not need to be removed to replace a bulb.

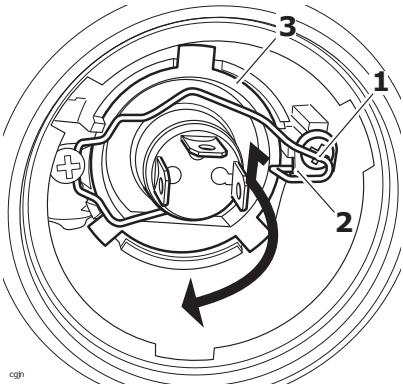

1. **Bulb retainer (right hand shown)**
2. **Bulb retainer hook**
3. **Bulb**

To replace a bulb:

- Remove the rider's seat.
- Disconnect the battery, negative (black) lead first.
- Remove the bulb cover from the bulb to be replaced by rotating it anticlockwise.
- Disconnect the multiplug from the bulb.
- Detach the bulb retainer from the hook on the headlight assembly and rotate it away from the bulb as shown.
- Remove the bulb from the bulb retainer.

Installation is the reverse of the removal procedure.

Front Fog Lights (if fitted)

The fog light units are sealed, maintenance-free LED units.

Rear Light/Licence Plate Light

The rear light unit is a sealed, maintenance-free LED unit. The licence plate light is integral to the rear light unit.

Direction Indicator Lights

The motorcycle is fitted with either LED or bulb direction indicator lights.

LED Direction Indicator Lights

The direction indicator light units are sealed, maintenance-free LED units.

Bulb Direction Indicator Lights

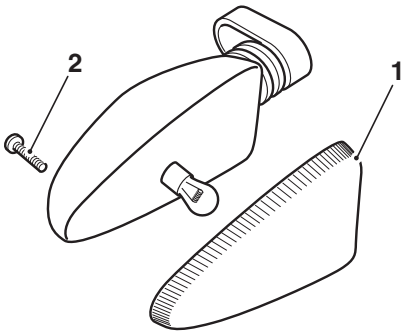

celc_2

1. **Indicator lens**
2. **Securing screw**

The lens on each indicator light is held in place by a securing screw.

Release the screw and remove the lens to gain access to the bulb for replacement.

CLEANING AND STORAGE

Table of Contents

Preparation for Washing 215
Where to be Careful 215
Washing 216
After Washing 216
Care of Matt Paintwork 217
Care of Gloss Paintwork 217
Aluminium Items - not Lacquered or Painted 218
Cleaning of Chrome and Stainless Steel Items 218
Black Chrome 219
Cleaning of the Exhaust System 219
Seat Care 220
Windscreen Cleaning (if fitted) 221
Care of Leather Products 222
Preparation for Storage 223
Preparation after Storage 224

Preparation for Washing

Before washing, precautions must be taken to keep water off the following places.

Rear opening of the exhausts: Cover with a plastic bag secured with rubber bands.

Clutch and brake levers, switch housings on the handlebar: Cover with plastic bags.

Ignition switch and steering lock: Cover the keyhole with tape.

Remove any items of jewellery such as rings, watches, zips or belt buckles, which may scratch or otherwise damage painted or polished surfaces.

Use separate cleaning sponges or cleaning cloths for washing painted/polished surfaces and chassis areas. Chassis areas (such as wheels and under mudguards) will be exposed to more abrasive road grime and dust, which may then scratch painted or polished surfaces, if the same sponge or cleaning cloths are used.

Where to be Careful

Caution

Do not spray any water at all near the air intake duct. The air intake duct is normally located under the rider's seat, under the fuel tank or near the steering head. Any water sprayed in this area could enter the airbox and engine, causing damage to both items.

Caution

Use of high pressure spray washers is not recommended. When using pressure washers, water may be forced into bearings and other components causing premature wear from corrosion and loss of lubrication.

Avoid spraying water with any great force near the following places:

- Instruments;
- Brake cylinders and brake calipers;
- Under the fuel tank;
- Air intake duct;
- Headstock bearings;
- Wheel bearings.

Note:

- **Use of soaps that are highly alkaline will leave a residue on painted surfaces, and may also cause water spotting. Always use a low alkaline soap to aid the cleaning process.**

Washing

Prepare a mixture of cold water and mild automotive cleaner. Do not use a highly alkaline soap as commonly found at commercial car washes because it leaves a residue.

Wash the motorcycle with a sponge or soft cloth. Do not use abrasive scouring pads or steel wool. They will damage the finish.

Rinse the motorcycle thoroughly with cold water.

After Washing

Warning

Never wax or lubricate the brake discs. Loss of braking power and an accident could result. Clean the disc with a proprietary brand of oil-free brake disc cleaner.

Remove the plastic bags and tape, and clear the air intakes.

Lubricate the pivots, bolts and nuts.

Test the brakes before motorcycle operation.

Use a dry cloth or chamois leather to absorb water residue. Do not allow water to stand on the motorcycle as this will lead to corrosion.

Start the engine and run it for 5 minutes. Make sure that there is adequate ventilation for the exhaust fumes.

Care of Matt Paintwork

Matt paintwork requires no greater care than that already recommended for high gloss paintwork.

- Do not use any polish or wax on matt paintwork.
- Do not try and polish out scratches.

Care of Gloss Paintwork

Gloss paintwork should be washed and dried as described above, then protected using a high quality automotive polish. Always follow the manufacturer's instructions and repeat regularly to maintain your motorcycle's appearance.

Aluminium Items - not Lacquered or Painted

Items such as brake and clutch levers, wheels, engine covers, engine cooling fins, upper and lower yokes and throttle bodies on some models must be correctly cleaned to preserve their appearance. Please contact your dealer if you are unsure which components on your motorcycle are aluminium parts not protected by paint or lacquer, and for guidance on how to clean those items.

Use a proprietary brand of aluminium cleaner which does not contain abrasive or caustic elements.

Clean aluminium items regularly, in particular after use in inclement weather, where the components must be hand washed and dried each time the machine is used.

Warranty claims due to inadequate maintenance will not be allowed.

Cleaning of Chrome and Stainless Steel Items

All chrome and stainless steel parts of your motorcycle must be cleaned regularly to avoid a deterioration of its appearance.

Washing

Wash as previously described.

Drying

Dry the chrome and stainless steel parts as far as possible with a soft cloth or chamois leather.

Protecting

Caution

The use of products containing silicone will cause discolouration of the chrome and stainless steel parts and must not be used. Similarly, the use of abrasive cleaners will damage the finish and must not be used.

When the chrome and stainless steel is dry, apply a suitable proprietary chrome cleaner on to the surface, following the manufacturer's instructions.

It is recommended that regular protection be applied to the motorcycle as this will both protect and enhance its appearance.

Black Chrome

Items such as headlight bowls and mirrors on some models must be correctly cleaned to preserve their appearance. Please contact your dealer if you are unsure which components on your motorcycle are black chrome parts. Maintain the appearance of black chrome items by rubbing a small amount of light oil into the surface.

Cleaning of the Exhaust System

All parts of the exhaust system of your motorcycle must be cleaned regularly to avoid a deterioration of its appearance. These instructions can be applied to chrome, brushed stainless steel and carbon fibre components; matt painted exhaust systems should be cleaned as above, noting the care instructions in the Matt Paintwork section previously.

Note:

- **The exhaust system must be cool before washing to prevent water spotting.**

Washing

Wash as previously described.

Make sure that no soap or water enters the exhausts.

Drying

Dry the exhaust system as far as possible with a soft cloth or chamois leather. Do not run the engine to dry the system or spotting will occur.

Protecting

Caution

The use of products containing silicone will cause discolouration of the chrome and must not be used. Similarly, the use of abrasive cleaners will damage the system and must not be used.

When the exhaust system is dry, apply a suitable proprietary motorcycle protection spray onto the surface, following the manufacturer's instructions.

It is recommended that regular protection be applied to the system as this will both protect and enhance the system's appearance.

Seat Care

Caution

Use of chemicals or high pressure spray washers is not recommended for cleaning the seat.

Using chemicals or high pressure spray washers may damage the seat cover.

To help maintain its appearance, clean the seat using a sponge or cleaning cloth with soap and water.

Windscreen Cleaning (if fitted)

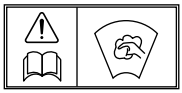

Warning

Never attempt to clean the windscreen while the motorcycle is in motion as releasing the handlebars may cause loss of motorcycle control and an accident.

Operation of the motorcycle with a damaged or scratched windscreen will reduce the rider's forward vision. Any such reduction in forward vision is dangerous and may lead to loss of motorcycle control and an accident.

Caution

Corrosive chemicals such as battery acid will damage the windscreen. Never allow corrosive chemicals to contact the windscreen.

Caution

Products such as window cleaning fluids, insect remover, rain repellent, scouring compounds, petrol or strong solvents such as alcohol, acetone, carbon tetrachloride, etc. will damage the windscreen.

Never allow these products to contact the windscreen.

Clean the windscreen with a solution of mild soap or detergent and cold water.

After cleaning, rinse well and then dry with a soft, lint-free cloth.

If the transparency of the windscreen is reduced by scratches or oxidation which cannot be removed, the windscreen must be replaced.

Care of Leather Products

We recommend that you periodically clean your leather products with a damp cloth and allow them to dry naturally at room temperature. This will maintain the appearance of the leather and ensure the long life of your product.

Your Triumph leather product is a natural product and lack of care can result in damage and permanent wear. Follow these simple instructions and give your leather product the respect it deserves:

- Do not use household cleaning products, bleach, detergents containing bleach or any kind of solvent to clean your leather product.
- Do not immerse your leather product in water.
- Avoid direct heat from fires and radiators which can dry out and distort the leather.
- Do not leave your leather product in direct sunlight for prolonged periods of time.
- Do not dry your leather product by applying direct heat to it at any time.
- If your leather product does get wet, absorb any excess water with a soft clean cloth then leave the product to dry naturally at room temperature.
- Avoid exposure of your leather product to high levels of salt, for example sea/salt water or road surfaces that have been treated during the winter for ice and snow.
- If exposure to salt is unavoidable, clean your leather product immediately after each exposure using a damp cloth then leave the product to dry naturally at room temperature.
- Gently clean any minor marks with a damp cloth then leave the product to dry naturally at room temperature.
- Place your leather product in a fabric bag or cardboard box to protect it when in storage. Do not use a plastic bag.

Preparation for Storage

Clean and dry the entire vehicle thoroughly.

Fill the fuel tank with the correct grade of unleaded fuel and add a fuel stabiliser (if available), following the fuel stabiliser manufacturer's instructions.

Warning

Petrol is extremely flammable and can be explosive under certain conditions. Turn the ignition switch off. Do not smoke. Make sure the area is well ventilated and free from any source of flame or sparks; this includes any appliance with a pilot light.

Remove the spark plug from each cylinder and put several drops (5 ml) of engine oil into each cylinder. Cover the spark plug holes with a piece of cloth or rag. With the engine stop switch in the RUN position, push the starter button for a few seconds to coat the cylinder walls with oil. Install the spark plugs, tightening to **12 Nm**.

Change the engine oil and filter (see page 176).

Check and if necessary correct the tyre pressures.

Set the motorcycle on a stand so that both wheels are raised off the ground. (If this cannot be done, put boards under the front and rear wheels to keep dampness away from the tyres.)

Spray rust inhibiting oil (there are a host of products on the market and your dealer will be able to offer you local advice) on all unpainted metal surfaces to prevent rusting. Prevent oil from getting on rubber parts, brake discs or in the brake calipers.

Make sure the cooling system is filled with a 50% mixture of coolant (noting that HD4X Hybrid OAT coolant, as supplied by Triumph, is premixed and requires no dilution) and distilled water solution (see page 179).

Remove the battery, and store it where it will not be exposed to direct sunlight, moisture, or freezing temperatures. During storage it should be given a slow charge (one ampere or less) approximately once every two weeks (see page 200).

Store the motorcycle in a cool, dry area, away from sunlight, and with a minimum daily temperature variation.

Put a suitable porous cover over the motorcycle to keep dust and dirt from collecting on it. Avoid using plastic or similar non-breathable, coated materials that restrict air flow and allow heat and moisture to accumulate.

Preparation after Storage

Install the battery (if removed) (see **page 203**).

If the motorcycle has been stored for more than four months, change the engine oil (see **page 176**).

Check all the points listed in the Daily Safety Checks section.

Before starting the engine, remove the spark plugs from each cylinder.

Put the side stand down.

Crank the engine on the starter motor several times until the oil pressure light goes out.

Refit the spark plugs, tightening to **12 Nm**, and start the engine.

Check and if necessary correct the tyre pressures.

Clean the entire vehicle thoroughly.

Check the brakes for correct operation.

Test ride the motorcycle at low speeds.

SPECIFICATIONS

Dimensions, Weights and Performance

A list of model specific dimensions, weights and performance figures is available from your authorised Triumph dealer, or on the Internet at www.triumph.co.uk.

Maximum Payload

Tiger 1200 XR	230 kg (507 lb)
Tiger 1200 XRx	228 kg (502 lb)
Tiger 1200 XRx-LRH	230 kg (507 lb)
Tiger 1200 XRT	228 kg (502 lb)
Tiger 1200 XCx	223 kg (491 lb)
Tiger 1200 XCA	224 kg (493 lb)

Engine

Type	In-line 3 cylinder
Displacement	1,215 cc
Bore x Stroke	85 x 71.4 mm
Compression Ratio	11:1
Cylinder Numbering	Left to Right
Cylinder Sequence Number	1 at left
Firing Order	1-2-3
Starting System	Electric Starter

Lubrication

Lubrication	Pressure Lubrication (wet sump)
Engine Oil Capacities	
Dry Fill	4.5 litres
Oil/Filter Change	4.0 litres
Oil Change Only	3.85 litres

Cooling

Coolant Type	Triumph HD4X Hybrid OAT coolant
Water/Anti-freeze ratio	50/50 (premixed as supplied by Triumph)
Coolant Capacity	2.8 litres
Thermostat Opens (nominal)	88°C (nominal)

Fuel System

Type	Electronic Fuel Injection
Injectors	Solenoid Operated
Fuel Pump	Submerged Electric
Fuel Pressure (nominal)	3.5 bar

Fuel

Type	91 RON unleaded
Tank Capacity	20.0 litres

Ignition

Ignition System	Digital Inductive
Electronic Rev Limiter (r/min)	9,500 r/min
Spark Plug	NGK CR8EK
Spark Plug Gap	0.7 mm
Gap Tolerance	+0.05/-0.1 mm

Transmission

Transmission Type	6 Speed, Constant Mesh
Clutch Type	Wet, Multi-Plate
Final Drive Ratio	2.557:1
Gear Ratios:	
Front Bevel Box	1.042:1 (24/25)
Rear Bevel Box	2.455:1 (11/27)
1st	2.846:1 (13/37)
2nd	2.056:1 (18/37)
3rd	1.583:1 (24/38)
4th	1.2916:1 (24/31)
5th	1.138:1 (29/33)
6th	1.037:1 (27/28)

Approved Tyres

A list of approved tyres specific to these models is available from your authorised Triumph dealer, or on the Internet at www.triumph.co.uk.

Warning

Use the recommended tyres ONLY in the combinations given. Do not mix tyres from different manufacturers or mix different specification tyres from the same manufacturers as this may result in loss of motorcycle control and an accident.

Approved Mud and Snow/Dual Purpose Tyres

A list of approved mud and snow/dual purpose tyres specific to these models is available from your authorised Triumph dealer, or on the Internet at www.triumph.co.uk.

Warning

The use of mud and snow/dual purpose tyres will result in reduced motorcycle stability.

Always operate a motorcycle equipped with mud and snow/dual purpose tyres at reduced speeds. The permissible maximum speed is 60 mph (110 km/h). This is also shown on a warning sticker on the motorcycle.

Operation of the motorcycle above the permissible maximum speed may result in loss of motorcycle control and an accident.

Warning

Tyre pressures which have been reduced for off-road riding will impair on-road stability. Always make sure that the tyre pressures are set as described in the Specifications section for on-road use.

Operation of the motorcycle with incorrect tyre pressures may cause loss of motorcycle control leading to an accident.

Tyres

Tyre Pressures (Cold):	
Front	2.2 bar (32 lb/in²)
Rear	2.7 bar (39 lb/in²)
Tyre Sizes:	
Front Size	120/70 R19
Rear Size	170/60 R17

Electrical Equipment

Battery Type	YTZ14S
Battery Rating	12 Volt, 11.2 Ah
Alternator	12 Volt, 70 Amp at 4,000 rpm
Headlight	2 × 12 Volt, 55/60 Watt, H4 Halogen (Tiger 1200 XR only)
	LED
Tail/Brake Light	LED
Parking Light	LED
Fog Lights (if fitted)	LED
Directional Indicator Lights	RY10W, 12 Volt, 10 Watt, Amber
	LED (model specific)

Frame

Rake	23.1°
Trail	99.2 mm

Tightening Torques

Oil Filter	10 Nm
Oil Drain Plug	25 Nm
Spark Plug	12 Nm
Rear Wheel Nuts	70 Nm

Fluids and Lubrication

Engine Oil	Semi or fully synthetic 10W/40 or 10W/50 motorcycle engine oil which meets specification API SH (or higher) and JASO MA, such as Castrol Power 1 Racing 4T 10W-40 (fully synthetic)
Brake and Clutch Fluid	DOT 4 Brake and Clutch Fluid
Coolant	Triumph HD4X Hybrid OAT coolant
Bearings and Pivots	Grease to NLGI 2 specification
Final Drive Unit	Castrol SAF-XO (fully synthetic hypoid oil)

INDEX

A

Accessories 163
Anti-Lock Braking System (ABS) 154
ABS Warning Light 156
Optimised Cornering ABS 154

B

Battery 200
Charging 203
Discharge 202
Disposal 202
Installation 204
Maintenance 202
Removal 201
Storage 202
Brakes 184
Anti-Lock Braking System (ABS) 154
Brake and Clutch Lever Adjusters 106
Brake Light 188
Braking 151
Breaking-in New Brake Pads and Discs . . . 184
Disc Brake Fluid 185
Front Brake Fluid Level Adjustment 187
Front Brake Fluid Level Inspection 186
Optimised Cornering ABS 154
Pad Wear Compensation 185
Rear Brake Fluid Level Adjustment 188
Rear Brake Fluid Level Inspection 187
Wear Inspection 184
Bulb Replacement 212

C

Chassis Electronic Control Module (Chassis ECM) 207
Cleaning
After Washing 216
Aluminium Items - not Lacquered or Painted 218
Black Chrome Items 219
Care of Leather Products 222
Chrome and Stainless Steel 218
Drying 219
Exhaust System 219
Gloss Paintwork 217
Matt Paintwork 217
Preparation for Washing 215
Protecting 219
Seat Care 220
Washing 216
Washing the Exhaust 219
Where to be Careful 215
Windscreen 221
Clutch 182
Clutch Fluid Level Adjustment 182
Clutch Fluid Level Inspection 182
Considerations for High-Speed Operation . . . 160
Cooling System 179
Coolant Change 180
Coolant Level Adjustment 180
Coolant Level Inspection 180
Corrosion Inhibitors 179
High Coolant Temperature Warning Light . . 62
Specifications 226
Cruise Control 107
Activating 108
Adjusting the Set Speed 109
Buttons 107
Cruise Control Adjust Button 100
Deactivating 109
Resuming the Set Speed 110

D

Direction Indicator Lights 213
Replacement 213

E

Electrical Accessory Sockets 129
Electrical Equipment 228
Specifications 228
Engine
Moving Off 149
Serial Number 20
Specifications 225

Starting the Engine 146, 148
Stopping the Engine. 144, 145
Engine Oil 175
Disposal of Oil and Filters 177
Engine Oil Change 176
Oil Filter Change 176
Oil Level Inspection 175
Specification and Grade 178
Engine Start/Stop Switch
QUICK START Position. 98
RUN Position. 98
STOP Position 98

F

Final Drive Unit 183
Oil Level Adjustment 183
Fluids and Lubricants 229
Fog Lights 213
Frame 228
Front Suspension 190
Compression Damping Adjustment. 191
Fork Inspection 190
Front Suspension Adjustment 190
Rebound Damping Adjustment 191
Settings Chart 192
Fuel 117, 226
Filling the Fuel Tank 120
Fuel Grade 117
Fuel Tank Cap 118
Refuelling 118
System Specifications. 226
Fuses. 204
ABS Fuse 204
Main Fuse. 204

G

Gears
Changing Gears. 151

H

Hand Controls 94
Handlebar Adjustment 122
Headlights 208
Adjustment. 210, 211
Bend Lighting 209
Daytime Running Lights (DRL) 209
Replacement. 212
Heated Seats
Rider's Heated Seat Switch 103
Helmet Hook 128
Hill Hold Control 157
Activation 157
Deactivation 158
Unavailable Message 158

I

Ignition
Engine Immobiliser 96
Ignition Key. 96
Keyless. 94
Smart Key. 94
Specifications 226
Switch Positions 97
Switch/Steering Lock 96
Immobiliser
Indicator Light. 26, 62
Instruments
Description 21
Information Messages 68
Motorcycle Status Display Screen 69
Multifunction Display Screen 73
Speedometer. 31
Tachometer. 31, 68
Warning Messages 67

K

Keyless Ignition 94

L

Left Handlebar Switches. 100, 103
Direction Indicator Switch 101, 104
Fog Lights Switch (if fitted) 102
Headlight Dip Switch 103
Heated Grips Switch. 101
High Beam Button 29, 102
Horn Button 101, 104

Instrument SCROLL Button 105
Instrument SELECT Button 104
Joystick Button 101
MODE Button 101, 105
Rider's Heated Seat Switch 103
Loading 164
Lubrication Specifications 225
Luggage Systems
Expedition Aluminium Panniers (if fitted) . . 132

M

Maintenance
Scheduled Maintenance 171
Scheduled Maintenance Table 173
Master Ignition Switch (if fitted) 95
Maximum Payloads 225
Motorcycle Status Display Screen
Ambient Air Temperature 72
Clock 72
Coolant Temperature Gauge 70
Cruise Set Speed 71
Fuel Gauge 69
Gear Position Display 71
Service Indicator 71
Speedometer. 69
Multifunction Display Screen
Home Screen 73
Motorcycle Information. 76
Riding Mode Display 74
Trip Meter Reset 75
Trip Meters 75
Windscreen Adjustment Mode. 75

P

Parking 159
Parts Identification
Left Hand Side 16
Rider View 18, 19
Right Hand Side. 17
Passengers. 167

R

Rear Light/License Plate Light. 213
Rear Suspension 193
Adjustment. 193
Rebound Damping Adjustment 194
Setting Chart 194
Spring Preload Adjustment 193
Riding Modes 83
Riding Mode Configuration 87
Riding Mode Selection 84
Right Handlebar Switches. 97, 99
Cruise Control Adjust Button. 99
Daytime Running Light (DRL) Switch. 29
Daytime Running Lights (DRL) Switch 100
Engine Stop Switch 99
Hazard Switch. 29
Hazard Warning Lights. 98, 99
Starter Button 99
Running-In 139

S

Safety
Daily Checks 140
Fuel and Exhaust Fumes 8
Handlebars and Footrests. 10
Helmet and Clothing. 9
Maintenance and Equipment. 12
Motorcycle 7
Parking 11
Parts and Accessories 11
Riding 9
Seats 124
Heated Seats (if fitted) 127
Passenger Seat 124
Rider's Seat. 126
Rider's Seat Height Adjustment 126
Seat Care 124, 220
Settings Menu. 77
Bike Setup 79
Display Setup 81
Riding Modes 77
Show Warnings 77
Trip Setup 78
Smart Key. 94
Operation 94

Stands 123
Centre Stand. 124
Side Stand 123
Steering
Bearings Inspection 189
Inspection. 188
Wheel Bearings Inspection 189
Steering Lock
Steering Lock Button 98
Storage
Preparation after Storage. 224
Preparation for Storage 223

T

TFT Digital Display
Ambient Air Temperature 33
Fuel Gauge 32
Gear Position Display 32
Information Tray - Coolant Temperature . . . 43
Information Tray - Fuel Information 40
Information Tray - Odometer. 41
Information Tray - Overview 38
Information Tray - Screen Contrast 42
Information Tray - Service Interval Announcement 41
Information Tray - Style Options 43
Information Tray - Trip Meter. 39
Information Tray - Tyre Pressure Monitoring 40
Information Tray - Warning Review 39
Instrument Panel Layout 23
Instrument Panel Position Adjustment 58
Main Menu - Bike Set Up - ABS 50
Main Menu - Bike Set Up - Direction Indicators 49
Main Menu - Bike Set Up - Service 50
Main Menu - Bike Set Up - Traction Control . 50
Main Menu - Display Set Up - Brightness . . 54
Main Menu - Display Set Up - Language . . . 55
Main Menu - Display Set Up - Set Clock. . . . 56
Main Menu - Display Set Up - Set Date 56
Main Menu - Display Set Up - Set Units . . . 55
Main Menu - Display Set Up - Styles and Themes 53
Main Menu - Display Set Up - Visible Tray . . 54
Main Menu - Reset to Defaults 57
Main Menu - Riding Mode Configuration . . . 46
Main Menu - Riding Modes 45
Main Menu - Trip 2 Enable/Disable 52
Main Menu - Trip Setup 51
Main Menu - Trip Setup - Automatic Reset . 52
Main Menu - Trip Setup - Manual Reset . . . 51
Main Menu Overview 44
Riding Mode Selecion 35
Riding Modes 34
Service Interval Announcement. 33
TFT Display Navigation 24
TFT Themes and Styles 24
Warning Lights 25
Throttle Control. 105, 181
Brake Use. 106
Tool Kit 129
Torques
Tightening 229
Traction Control (TC). 112
Disabled Warning Light. 27
Indicator Light. 27
Optimised Cornering Traction Control 112
Settings 113
Transmission
Specifications 227
Triumph Semi Active Suspension (TSAS) . . 41, 110
Damping Settings 111
Modes 111
System Calibration 111
Tyre Pressure Monitoring System 114
Low Tyre Pressure. 117
Sensor Batteries 116
System Fault. 116
Tyre Pressure Warning Light. 115
Tyre Pressures 116
Tyres 5, 195
Inflation Pressures. 228
Low Tyre Pressure. 117
Minimum Recommended Tread Depth . . . 197

Sizes 228
Specifications 228
Tyre Inflation Pressures 196
Tyre Pressures 116
Tyre Replacement 197
Tyre Wear. 196

U

Universal Serial Bus (USB) Socket 130

V

Vehicle Identification Number 20

W

Warning Lights 61
Warnings 3
Immobiliser and TPMS 4
Maintenance. 3
Noise Control System 4
Off-Road Use 4
Owner's Handbook. 5
Warning Label Locations. 14
Warning Labels 3
Warning Lights 25, 61
Windscreen 120
Height Adjustment. 43, 121