Owner's Handbook

Explorer - All Models

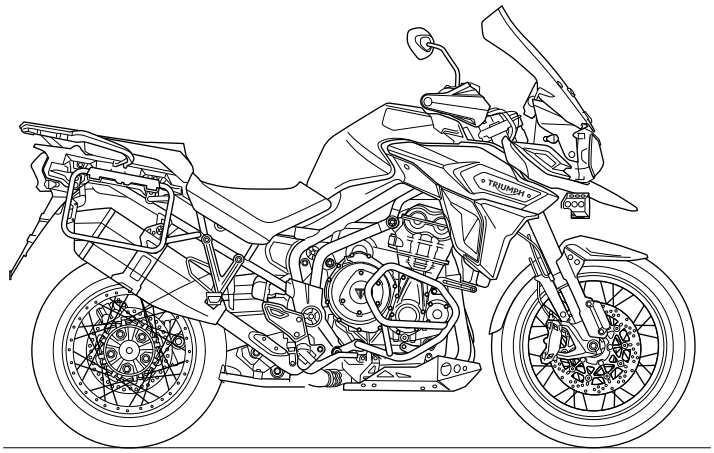

This handbook contains information on the Triumph Explorer XR, Explorer XRx, Explorer XRx-LRH, Explorer XRT, Explorer XC, Explorer XCx, Explorer XCx-LRH and Explorer XCA motorcycles. Always store this Owner's Handbook with the motorcycle and refer to it for information whenever necessary.

The information contained in this publication is based on the latest information available at the time of printing. Triumph reserves the right to make changes at any time without prior notice, or obligation.

Not to be reproduced wholly or in part without the written permission of Triumph Motorcycles Limited.

© Copyright 12.2015 Triumph Motorcycles Limited, Hinckley, Leicestershire, England.

Publication part number 3851524-EN issue 1.

Table of Contents

This handbook contains a number of different sections. The table of contents below will help you find the beginning of each section where, in the case of the major sections, a further table of contents will help you find the specific subject required.

Foreword 3

Warning Labels 12

Parts Identification 14

Serial Numbers 17

General Information 19

How to Ride the Motorcycle 111

Accessories, Loading and Passengers 127

Maintenance and Adjustment 131

Storage 177

Specifications 179

FOREWORD

Owner's Handbook

Thank you for choosing a Triumph motorcycle. This motorcycle is the product of Triumph's use of proven engineering, exhaustive testing, and continuous striving for superior reliability, safety and performance.

Please read this Owner's Handbook before riding in order to become thoroughly familiar with the correct operation of your motorcycle's controls, its features, capabilities and limitations.

This handbook includes safe riding tips, but does not contain all the techniques and skills necessary to ride a motorcycle safely.

Triumph strongly recommends that all riders undertake the necessary training to ensure safe operation of this motorcycle.

This handbook is available from your local dealer in:

- Brazilian
- Dutch
- English
- French
- German
- Italian
- Japanese
- Spanish
- Swedish
- US English.

Warning

This Owner's Handbook, and all other instructions that are supplied with your motorcycle, should be considered a permanent part of your motorcycle and should remain with it even if your motorcycle is subsequently sold.

All riders must read this Owner's Handbook and all other instructions which are supplied with your motorcycle, before riding, in order to become thoroughly familiar with the correct operation of your motorcycle's controls, its features, capabilities and limitations. Do not lend your motorcycle to others as riding when not familiar with your motorcycle's controls, features, capabilities and limitations can lead to an accident.

Talk to Triumph

Our relationship with you does not end with the purchase of your Triumph. Your feedback on the buying and ownership experience is very important in helping us develop our products and services for you. Please help us by ensuring your dealership has your E-mail address and registers this with us. You will then receive an online customer satisfaction survey invitation to your E-mail address where you can give us this feedback.

Your Triumph Team.

Foreword

Warnings, Cautions and Notes

Throughout this Owner's Handbook particularly important information is presented in the following form:

Warning

This warning symbol identifies special instructions or procedures, which if not correctly followed could result in personal injury, or loss of life.

Caution

This caution symbol identifies special instructions or procedures, which, if not strictly observed, could result in damage to, or destruction of, equipment.

Note:

- **This note symbol indicates points of particular interest for more efficient and convenient operation.**

Warning Labels

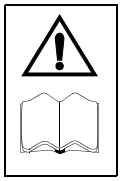

At certain areas of the motorcycle, the symbol (left) can be seen. The symbol means CAUTION: REFER TO THE HANDBOOK and will be followed by a pictorial representation of the subject concerned.

Never attempt to ride the motorcycle or make any adjustments without reference to the relevant instructions contained in this handbook.

See page 12 for the location of all labels bearing this symbol. Where necessary, this symbol will also appear on the pages containing the relevant information.

Maintenance

To ensure a long, safe and trouble-free life for your motorcycle, maintenance should only be carried out by an authorised Triumph dealer. Only an authorised Triumph dealer will have the necessary knowledge, equipment and skills to maintain your Triumph motorcycle correctly.

To locate your nearest Triumph dealer, visit the Triumph web site at www.triumph.co.uk or telephone the authorised distributor in your country. Their address is given in the service record book that accompanies this handbook.

Off-road Use

All Explorer models are designed for on-road and light off-road use. Light off-road use includes use on unpaved, dirt or gravel roads, but does not include riding on any motocross course, any off-road competition (such as motocross or enduro riding), or riding off-road with a passenger.

Light off-road use does not include jumping the motorcycle or riding over obstacles. Do not attempt to jump over any bumps or obstacles. Do not attempt to ride over any obstacles.

Noise Control System

Tampering with the Noise Control System is Prohibited.

Owners are warned that the law may prohibit:

- The removal or rendering inoperative by any person other than for purposes of maintenance, repair or replacement, of any device or element of design incorporated into any new vehicle for the purpose of noise control prior to its sale or delivery to the ultimate purchaser or while it is in use and,
- the use of the vehicle after such device or element of design has been removed or rendered inoperative by any person.

Immobiliser and Tyre Pressure Monitoring System

This device complies with part 15 of the FCC Rules.

Operation is subject to the following two conditions:

- This device may not cause harmful interference;
- This device must accept any interference received, including interference that may cause undesired operation.

Changes or modifications to the device could void the user's authority to operate the equipment.

Tyres

With reference to the Pneumatic Tyres and Tubes for Automotive Vehicles (Quality Control) Order, 2009, Cl. No. 3 (c), it is declared by M/s. Triumph Motorcycles Ltd. that the tyres fitted on this motorcycle meet the requirements of IS 15627: 2005 and comply with the requirements under Central Motor Vehicle Rules (CMVR), 1989.

Explorer XRx-LRH and Explorer XCx-LRH (Low Ride Height) Models

Unless stated otherwise, information, instructions, and specifications for Explorer XRx-LRH and Explorer XCx-LRH models are identical to those detailed in this Owner's Handbook for the Explorer XRx and Explorer XCx standard ride height models.

Note:

- **The Explorer XRx-LRH and Explorer XCx-LRH models cannot be fitted with a centre stand.**

FOREWORD - SAFETY FIRST

The Motorcycle

Warning

All Explorer models are designed for on-road use and light off-road use. Light off-road use includes use on unpaved, dirt or gravel roads, but does not include riding on any motocross course, any off-road competition (such as motocross or enduro riding), or riding off-road with a passenger.

Light off-road use does not include jumping the motorcycle or riding over obstacles. Do not attempt to jump over any bumps or obstacles. Do not attempt to ride over any obstacles.

Extreme off-road use could lead to loss of motorcycle control and an accident.

Warning

Explorer XRx-LRH and Explorer XCx-LRH (Low Ride Height) Models

The Explorer XRx-LRH and Explorer XCx-LRH (Low Ride Height) motorcycles are equipped with lowered suspension and have reduced ground clearance.

As a result, the cornering bank angles that can be achieved by the Explorer XRx-LRH and Explorer XCx-LRH are reduced, when compared with the standard ride height Explorer XRx and Explorer XCx models.

When riding, bear in mind that your motorcycle's ground clearance is limited. Operate your motorcycle in an area free from traffic to gain familiarity with the motorcycle's ground clearance and bank angle limitations.

Banking to an unsafe angle or unexpected contact with the ground may cause instability, loss of motorcycle control and an accident.

Warning

This motorcycle is not designed to tow a trailer or be fitted with a sidecar. Fitting a sidecar and/or a trailer may result in loss of motorcycle control and an accident.

Warning

This motorcycle is designed for use as a two-wheeled vehicle capable of carrying a rider on his/her own, or a rider and one passenger.

The total weight of the rider, and any passenger, accessories and luggage must not exceed the maximum load limit of:

Explorer XR - 238 kg (525 lb)

Explorer XRx - 236 kg (520 lb)

Explorer XRx-LRH - 238 kg (525 lb)

Explorer XRT - 227 kg (500 lb)

Explorer XC - 236 kg (520 lb)

Explorer XCx - 228 kg (503 lb)

Explorer XCx-LRH - 231 kg (509 lb)

Explorer XCA - 224 kg (494 lb).

Warning

This motorcycle is fitted with a catalytic converter below the engine, which along with the exhaust system reaches very high temperature during engine operation. Flammable materials such as grass, hay/straw, leaves, clothing and luggage etc. could ignite if allowed to come into contact with any part of the exhaust system and catalytic converter; always ensure flammable materials are not allowed to contact the exhaust system or catalytic converter.

Fuel and Exhaust Fumes

Warning

PETROL IS HIGHLY FLAMMABLE:

Always turn off the engine when refuelling.

Do not refuel or open the fuel filler cap while smoking or in the vicinity of any open (naked) flame.

Take care not to spill any petrol on the engine, exhaust pipes or silencers when refuelling.

If petrol is swallowed, inhaled or allowed to get into the eyes, seek immediate medical attention.

Spillage on the skin should be immediately washed off with soap and water and clothing contaminated with petrol should immediately be removed.

Burns and other serious skin conditions may result from contact with petrol.

Warning

Never start your engine or let it run for any length of time in a closed area. The exhaust fumes are poisonous and may cause loss of consciousness and death within a short time. Always operate your motorcycle in the open-air or in an area with adequate ventilation.

Helmet and Clothing

Warning

When riding the motorcycle, both rider and passenger must always wear a motorcycle helmet, boots, eye protection, gloves, boots, trousers (close fitting around the knee and ankle) and a brightly coloured jacket. Brightly coloured clothing will considerably increase a rider's (or passenger's) visibility to other operators of road vehicles. Although full protection is not possible, wearing correct protective clothing can reduce the risk of injury when riding.

Warning

A helmet is one of the most important pieces of riding gear as it offers protection against head injuries. You and your passenger's helmet should be carefully chosen and should fit you or your passenger's head comfortably and securely. A brightly coloured helmet will increase a rider's (or passenger's) visibility to other operators of road vehicles.

An open face helmet offers some protection in an accident though a full face helmet will offer more.

Always wear a visor or approved goggles to help vision and to protect your eyes.

cbma

Riding

Warning

Never ride the motorcycle when fatigued or under the influence of alcohol or other drugs.

Riding when under the influence of alcohol or other drugs is illegal.

Riding when fatigued or under the influence of alcohol or other drugs reduces the rider's ability to maintain control of motorcycle and may lead to loss of motorcycle control and an accident.

Warning

All riders must be licenced to operate the motorcycle. Operation of the motorcycle without a licence is illegal and could lead to prosecution.

Operation of the motorcycle without formal training in the correct riding techniques that are necessary to become licenced is dangerous and may lead to loss of motorcycle control and an accident.

Warning

Always ride defensively and wear the protective equipment mentioned elsewhere in this foreword. Remember, in an accident, a motorcycle does not give the same impact protection as a car.

Warning

This Triumph motorcycle should be operated within the legal speed limits for the particular road travelled. Operating a motorcycle at high speeds can be potentially dangerous since the time available to react to given traffic situations is greatly reduced as road speed increases. Always reduce speed in potentially hazardous driving conditions such as bad weather or heavy traffic.

Warning

Continually observe and react to changes in road surface, traffic and wind conditions. All two-wheeled vehicles are subject to external forces which may cause an accident. These forces include but are not limited to:

- Wind draft from passing vehicles
- Potholes, uneven or damaged road surfaces
- Bad weather
- Rider error.

Always operate the motorcycle at moderate speed and away from heavy traffic until you have become thoroughly familiar with its handling and operating characteristics. Never exceed the legal speed limit.

Warning

Banking to an unsafe angle may cause instability, loss of motorcycle control and an accident.

Handlebars and Footrests

Warning

The rider must maintain control of the vehicle by keeping hands on the handlebars at all times.

The handling and stability of a motorcycle will be adversely affected if the rider removes his hands from the handlebars, resulting in loss of motorcycle control and an accident.

Warning

The rider and passenger must always use the footrests provided, during operation of the vehicle.

By using the footrests, both rider and passenger will reduce the risk of inadvertent contact with any motorcycle components and will also reduce the risk of injury from entrapment of clothing.

Parking

Warning

Always turn off the engine and remove the ignition key before leaving the motorcycle unattended. By removing the key, the risk of use of the motorcycle by unauthorised or untrained persons is reduced.

When parking the motorcycle, always remember the following:

Engage first gear to help prevent the motorcycle from rolling off the stand.

The engine and exhaust system will be hot after riding. DO NOT park where pedestrians, animals and/or children are likely to touch the motorcycle.

Do not park on soft ground or on a steeply inclined surface. Parking under these conditions may cause the motorcycle to fall over.

For further details, please refer to the How to Ride the Motorcycle section of this Owner's Handbook.

Parts and Accessories

Warning

Owners should be aware that the only approved parts, accessories and conversions for any Triumph motorcycle are those which carry official Triumph approval and are fitted to the motorcycle by an authorised dealer.

In particular, it is extremely hazardous to fit or replace parts or accessories whose fitting requires the dismantling of, or addition to, either the electrical or fuel systems and any such modification could cause a safety hazard.

The fitting of any non-approved parts, accessories or conversions may adversely affect the handling, stability or other aspects of the motorcycle's operation that may result in an accident causing injury or death.

Triumph does not accept any liability whatsoever for defects caused by the fitting of non-approved parts, accessories or conversions or the fitting of any approved parts, accessories or conversions by non-approved personnel.

Maintenance/Equipment

Warning

Consult your authorised Triumph dealer whenever there is doubt as to the correct or safe operation of this Triumph motorcycle.

Remember that continued operation of an incorrectly performing motorcycle may aggravate a fault and may also compromise safety.

Warning

Ensure all equipment that is required by law is installed and functioning correctly. The removal or alteration of the motorcycle's lights, silencers, emission or noise control systems can violate the law. Incorrect or improper modification may adversely affect the handling, stability or other aspects of the motorcycle's operation, which may result in loss of motorcycle control and an accident.

Warning

If the motorcycle is involved in an accident, collision or fall, it must be taken to an authorised Triumph dealer for inspection and repair. Any accident can cause damage to the motorcycle that, if not correctly repaired, may cause a second accident.

WARNING LABELS

The labels detailed on this and the following pages draw your attention to important safety information in this handbook. Before riding, ensure that all riders have understood and complied with all the information to which these labels relate.

Warning Label Locations

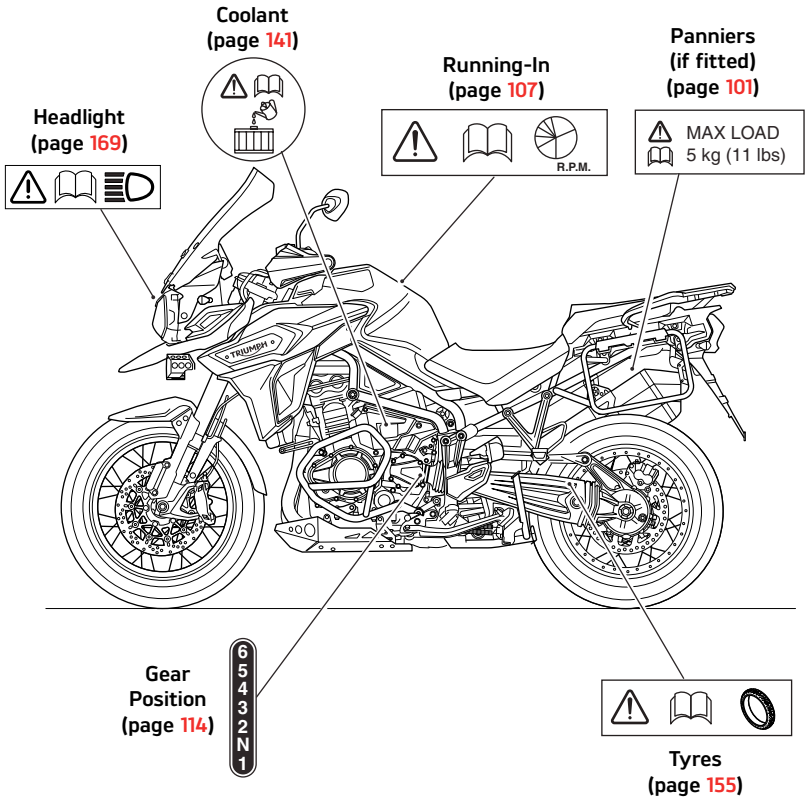

Warning Label Locations (continued)

Caution

All warning labels and decals, with the exception of the Running-in label, are fitted to the motorcycle using a strong adhesive. In some cases, labels are installed prior to an application of paint lacquer. Therefore, any attempt to remove the warning labels will cause damage to the paintwork or bodywork.

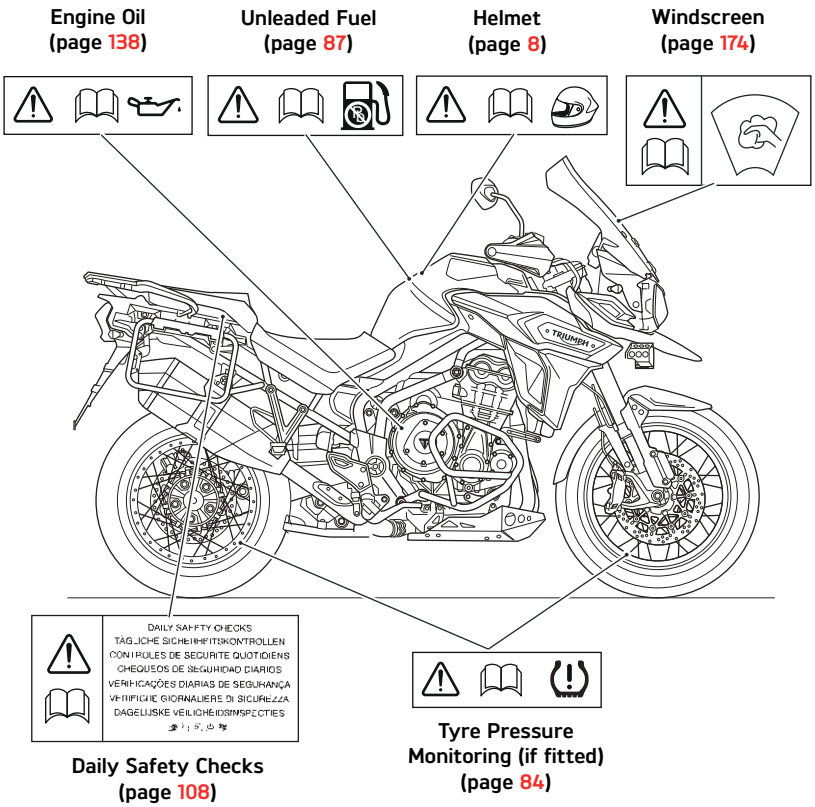

PARTS IDENTIFICATION

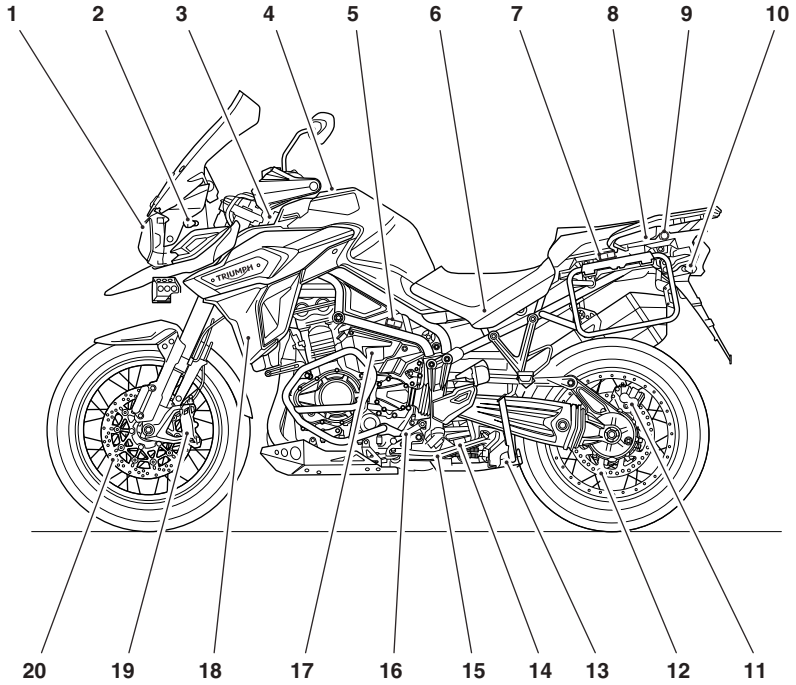

1. Headlight
2. Front indicator
3. Electrical accessory socket
4. Fuel tank and fuel filler cap
5. Rider's heated seat switch (if fitted)
6. Battery and fuse boxes
7. Passenger's heated seat switch (if fitted)
8. USB Socket
9. Electrical accessory socket (if fitted)
10. Rear indicator
11. Rear brake caliper
12. Rear brake disc
13. Centre stand (if fitted)
14. Rear suspension damping adjuster (Explorer XR and Explorer XC models only)
15. Side stand
16. Gear-change pedal
17. Coolant expansion tank
18. Radiator cowl
19. Front brake caliper
20. Front brake disc

Parts Identification (Continued)

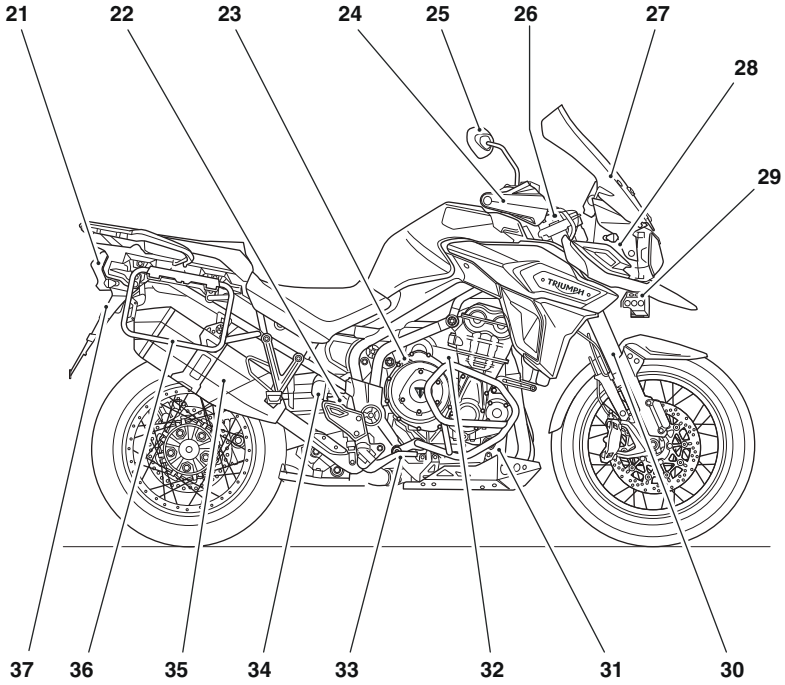

21. Rear light
22. Rear brake fluid reservoir
23. Oil filler cap
24. Handguards (if fitted)
25. Mirror
26. Front suspension damping adjusters
27. Windscreen
28. Headlight adjuster
29. Fog lights (if fitted)
30. Front fork
31. Engine oil level sight glass
32. Clutch line
33. Rear brake pedal
34. Rear suspension spring pre-load adjuster (Explorer XR and Explorer XC models only)
35. Silencer
36. Pannier mounting rails (if fitted)
37. Seat lock

Parts Identification (Continued)

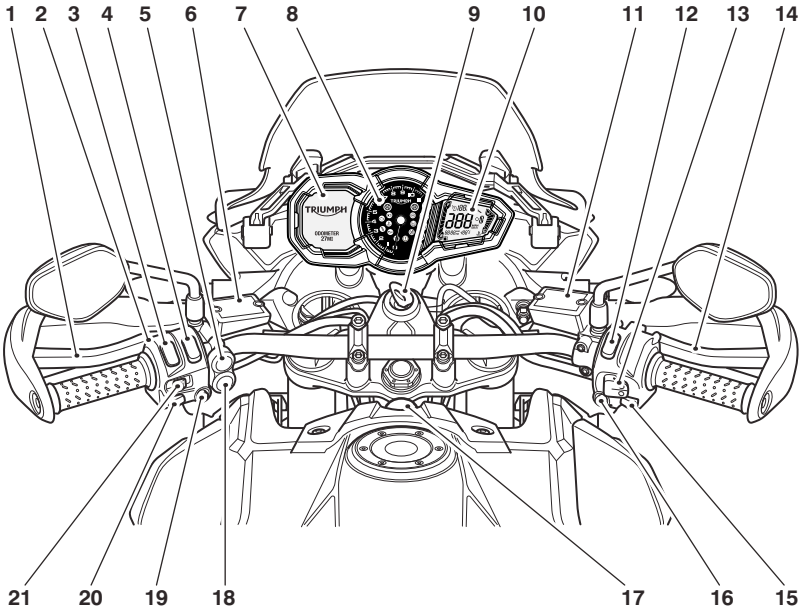

1. Clutch lever
2. Instrument select button
3. Headlight dip switch
4. Instrument scroll button
5. Fog lights switch (if fitted)
6. Clutch fluid reservoir
7. Multifunction display screen
8. Tachometer
9. Ignition switch
10. Motorcycle status display screen
11. Front brake fluid reservoir
12. Engine stop switch
13. Cruise control adjust button (if fitted)
14. Front brake lever
15. Starter button
16. Hazard warning lights button
17. Electrical accessory socket
18. Heated grips switch (if fitted)
19. Mode button
20. Horn button
21. Direction indicator switch

SERIAL NUMBERS

Vehicle Identification Number (VIN)

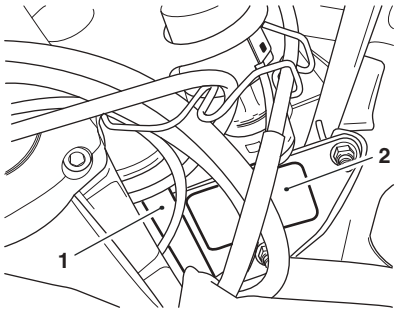

1. **VIN number**
2. **Label**

The Vehicle Identification Number (VIN) is stamped into the steering head area of the frame. In addition, It is displayed on a label which is mounted on the right hand side of the front subframe.

Record the vehicle identification number in the space provided below.

Engine Serial Number

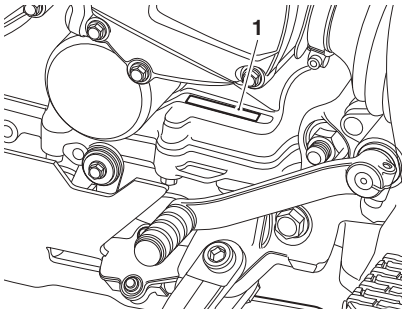

1. **Engine serial number**

The engine serial number is stamped on the engine crankcase, immediately below the gearbox.

Record the engine serial number in the space provided below.

This page intentionally left blank

GENERAL INFORMATION

Table of Contents

Instrument Panel Layout 23
Warning Lights 24
Direction Indicators 24
Neutral 24
High Beam 24
Low Fuel Warning Light 24
Fog Lights (if fitted) 24
Battery Warning Light 24
ABS (Anti-Lock Brake System) Warning Light 25
Cruise Control Light (If equipped) 27
Alarm/Immobiliser Indicator Light 27
Traction Control (TC) Disabled Warning Light 28
Traction Control (TC) Indicator Light 30
Engine Management System Malfunction Indicator Light (MIL) 31
High Coolant Temperature Warning Light 31
Low Oil Pressure Warning Light 32
Tyre Pressure Warning Light (If TPMS is fitted) 32
Triumph Semi Active Suspension (TSAS) Warning Light (if fitted) 33
Frost Symbol 34
Warning and Information Messages 35
Tachometer 36
Motorcycle Status Display Screen 37
Speedometer 37
Fuel Gauge 38
Coolant Temperature Gauge 39
Gear Position Display 39
Cruise Control Set Speed (If Cruise Control is fitted) 40
Service/Maintenance Indicator 40
Clock 41
Ambient Air Temperature 41
Multifunction Display Screen 42
Home Screen 42
Riding Mode Display 43
Windscreen Adjustment Mode 43

Triumph Semi Active Suspension (TSAS) Settings (if fitted) 44
Trip Meters 45
Trip Meter Reset 46
Motorcycle Information. 47

Settings Menu 48
Show Warnings 49
Riding Modes 49
Trip Setup 49
Bike Setup 50
Display Setup 55

Riding Modes 57
Riding Mode Selection. 58
Riding Mode Configuration. 62

Ignition Key 68

Ignition Switch/Steering Lock. 69
Engine immobiliser. 69
Ignition Switch Positions 69

Right Handlebar Switches. 70
Engine Stop Switch 70
Starter Button 70
Cruise Control Adjust Button (if fitted). 70
Hazard Warning Lights. 70

Left Handlebar Switches 71
Headlight Dip Switch 71
Direction Indicator Switch 72
Horn Button 72
Instrument SELECT Button 72
Instrument SCROLL Button 72
MODE Button 72
Fog Lights Switch (if fitted) 73
Heated Grips Switch (if fitted) 73

Throttle Control. 74
Brake Use 74

Brake and Clutch Lever Adjusters 75

Cruise Control (if fitted) 76
Activating Cruise Control 77
Adjusting the Set Speed While in Cruise Control 78
Deactivating Cruise Control 79
Resuming the Cruise Control Set Speed 79
Triumph Semi Active Suspension (TSAS) (if fitted) 80
Traction Control (TC) 82
Optimised Cornering TC 82
Traction Control Settings 84
Tyre Pressure Monitoring System (TPMS) (if fitted) 84
Function 84
TPMS Sensor ID Number 85
System Display 85
Sensor Batteries 86
TPMS System Fault 86
Tyre Pressures 86
Low Tyre Pressure 87
Replacement Tyres 87
Fuel Requirement/Refuelling 87
Fuel Grade 87
Fuel Tank Cap 88
Filling the Fuel Tank 89
Windscreen 90
Handlebar Adjustment 91
Stands 92
Side Stand 92
Centre Stand (if fitted) 93
Seats 93
Seat Care 93
Passenger Seat 94
Rider's Seat 95
Rider's Seat Height Adjustment 96
Heated Seats (if fitted) 97
Helmet Hook 98

General Information

Tool Kit, Handbook and the Triumph Accessory D-Lock 98
Electrical Accessory Sockets 99
Universal Serial Bus (USB) Socket 100
Luggage Systems 101
Expedition Aluminium Panniers (if fitted) 101
Running-In 107
Safe Operation 108
Daily Safety Checks 108

Instrument Panel Layout

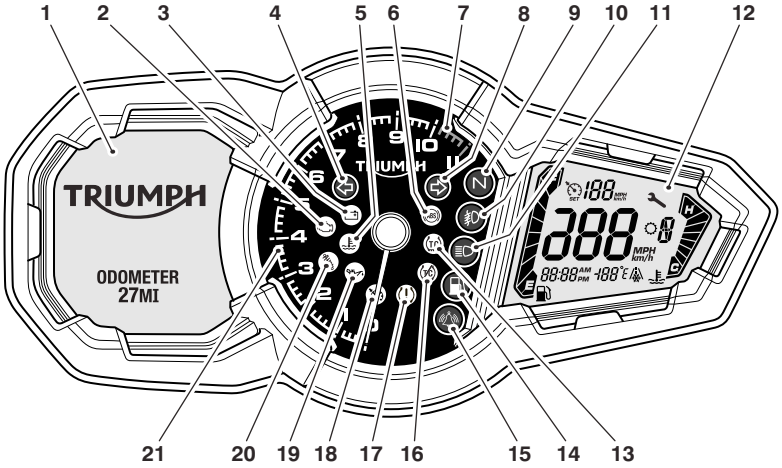

cisz

1. Multifunction display screen
2. Engine management malfunction indicator light (MIL)
3. Battery Warning Light
4. Left hand direction indicator light
5. High coolant temperature warning light
6. ABS warning light
7. Tachometer red zone
8. Right hand direction indicator light
9. Neutral indicator light
10. Fog lights indicator light
11. High beam indicator light
12. Motorcycle status display screen
13. Traction control indicator light
14. Low fuel level indicator light
15. Alarm/immobiliser status indicator light (alarm is an accessory kit)
16. Traction control disabled warning light
17. Tyre pressure warning light (if Tyre Pressure Monitoring System (TPMS) is fitted)
18. Cruise control light
19. Low oil pressure warning light
20. TSAS warning light
21. Tachometer

Warning Lights

Note:

- **When the ignition is switched on, the instrument warning lights will illuminate for 1.5 seconds and will then go off (except those which remain on until the engine starts, as described in the following pages).**

Direction Indicators

When the direction indicator switch is pushed to the left or right, the corresponding direction indicator light will flash on and off at the same speed as the direction indicator.

Both direction indicator lights will flash simultaneously when the hazard warning lights are activated.

Neutral

The neutral warning light indicates when the transmission is in neutral (no gear selected). The warning light will illuminate when the transmission is in neutral with the ignition switch in the ON position.

High Beam

When the ignition is switched on and the headlight dip switch is set to high beam, the high beam warning light will illuminate.

Low Fuel Warning Light

The low fuel warning light will illuminate when there are approximately 3.5 litres of fuel remaining in the tank.

Fog Lights (if fitted)

When the ignition is switched on and the fog lights are switched on, the fog lights warning light will illuminate.

Battery Warning Light

When the ignition is switched on, the battery warning light will only illuminate if a fault is recognised with the battery.

With the engine running, if the battery voltage becomes low, the battery warning light in the tachometer will illuminate and the message WARNING - BATTERY LOW will also be visible in the multifunction display screen.

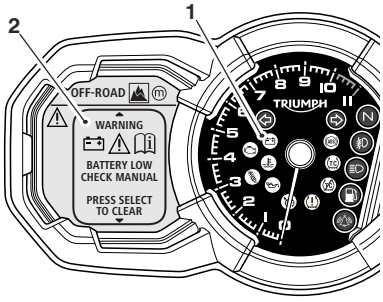

1. **Battery low warning light**
2. **Instrument message**

Once the battery is fully charged the warning light will go out and the instrument message will be deactivated.

If the battery warning light remains on it indicates that there is a malfunction that requires investigation. Contact an authorised Triumph dealer as soon as possible to have the fault checked and rectified.

ABS (Anti-Lock Brake System) Warning Light

When the ignition switch is turned to the ON position, it is normal that the ABS warning light will flash on and off. The light will continue to flash after engine start-up until the motorcycle first reaches a speed exceeding 6 mph (10 km/h) when it will go off.

The warning light should not illuminate again until the engine is restarted unless there is a fault, or:

- ABS is disabled by the rider - the warning light will remain illuminated (see Bike Setup on page 50 or Riding Mode Configuration on page 62).
- ABS is set to Off-Road – the warning light will flash slowly (see Riding Mode Configuration on page 62).

Note:

- **Traction control, optimised cornering traction control (if equipped) and cruise control (if equipped) may not function if there is a malfunction with the ABS system. In this situation, the warning lights for the ABS, traction control and the MIL may be illuminated.**

If the warning light becomes illuminated at any other time while riding it indicates that the ABS has a malfunction that requires investigation. One of the following warning messages may be displayed:

- WARNING - ABS SYSTEM DISABLED
- ABS SYSTEM - CORNERING ABS DISABLED (models equipped with optimised cornering ABS only).

The braking system will be affected as follows:

WARNING - ABS SYSTEM DISABLED

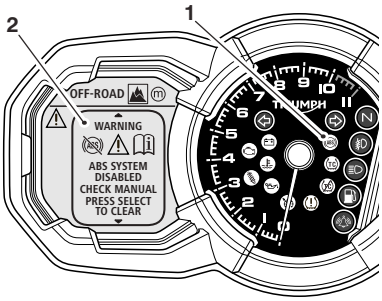

1. **ABS warning light**
2. **Instrument message**

The message WARNING - ABS SYSTEM DISABLED indicates that the ABS (and optimised cornering ABS if equipped) is not functioning.

Warning

If the ABS is not functioning or has been disabled by the rider (see Bike Setup on page 50 or Riding Mode Configuration on page 62), the brake system will continue to function as a non-ABS braking system.

Do not continue to ride for longer than is necessary with the warning light illuminated. In the event of a fault, contact an authorised Triumph dealer as soon as possible to have the fault checked and rectified.

In this situation, braking too hard will cause the wheels to lock resulting in loss of motorcycle control and an accident.

ABS SYSTEM - CORNERING ABS DISABLED (models equipped with optimised cornering ABS only)

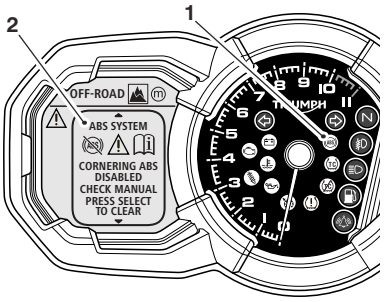

1. **ABS warning light**
2. **Instrument message**

The message ABS SYSTEM - CORNERING ABS DISABLED indicates that the optimised cornering ABS is not functioning.

Warning

If the optimised cornering ABS is not functioning, the ABS warning light will illuminate and the message ABS SYSTEM - CORNERING ABS DISABLED will be displayed in the multifunction display.

In this situation, the ABS will continue to operate but without the optimised cornering function, provided that:

- There are no other ABS faults
- The ABS has not been disabled by the rider (see Bike Setup on page 50 or Riding Mode Configuration on page 62).

Do not continue to ride for longer than is necessary with the warning light illuminated. In the event of a fault, contact an authorised Triumph dealer as soon as possible to have the fault checked and rectified.

In this situation, braking too hard during cornering may result in loss of motorcycle control and an accident.

See also Braking on page 115.

Cruise Control Light (If equipped)

The cruise control can only be activated when the motorcycle is travelling at a speed between 19 to 100 mph (30 to 160 km/h) and is in 3rd gear or higher. When activated, the cruise control light in the tachometer will be illuminated (see page 76).

Warning

Cruise control must only be used where you can ride safely at a steady speed.

Cruise control should not be used when riding in heavy traffic, on roads with sharp/blind bends or when they are slippery.

Using cruise control in heavy traffic, on roads with sharp/blind bends or when they are slippery, may result in loss of motorcycle control and an accident.

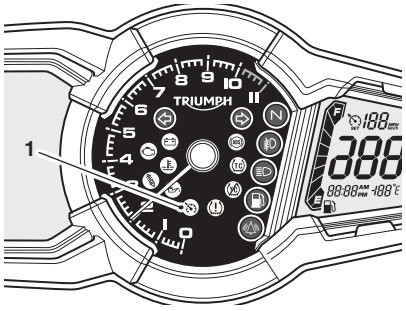

1. **Cruise control light**

Alarm/Immobiliser Indicator Light

This Triumph model is fitted with an engine immobiliser which is activated when the ignition switch is turned to the OFF position. If the motorcycle is fitted with a Genuine Triumph Accessory alarm, the immobiliser will operate as normal but the alarm/immobiliser light will operate as described below.

With Alarm Fitted

The alarm/immobiliser light will only illuminate when the conditions described in the Genuine Triumph Accessory alarm instructions are met.

Without Alarm Fitted

When the ignition switch is turned to the OFF position, the alarm/immobiliser light will flash on and off for 24 hours to show that the engine immobiliser is on. When the ignition switch is turned to the ON position the immobiliser and the indicator light will be off.

If the indicator light remains on it indicates that the immobiliser has a malfunction that requires investigation. Contact an authorised Triumph dealer as soon as possible to have the fault checked and rectified.

Traction Control (TC) Disabled Warning Light

The TC disabled warning light should not illuminate unless TC is disabled by the rider (see Bike Setup on page 50 or Riding Mode Configuration on page 62).

If the warning light becomes illuminated at any other time while riding, it indicates that the TC system has a malfunction that requires investigation. One of the following warning messages may be displayed:

- WARNING - TC SYSTEM DISABLED
- TC SYSTEM - CORNERING TC DISABLED (models equipped with optimised cornering TC only).

The TC system will be affected as follows:

WARNING - TC SYSTEM DISABLED

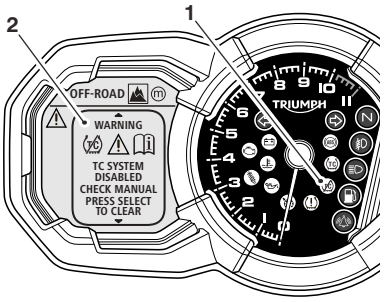

1. **Traction control disabled warning light**
2. **Instrument message**

The message WARNING - TC SYSTEM DISABLED indicates that TC (and optimised cornering TC if equipped) is not functioning.

Warning

If the TC system is not functioning, care must be taken when accelerating and cornering on wet/slippery road surfaces to avoid rear wheel spin.

In the event of a fault, the TC disabled warning light may be accompanied by the engine management system malfunction indicator light and/or the ABS warning light.

Do not continue to ride for longer than is necessary with any of the above warning lights illuminated. Contact an authorised Triumph dealer as soon as possible to have the fault checked and rectified.

Hard acceleration and cornering in this situation may cause the rear wheel to spin resulting in loss of motorcycle control and an accident.

TC SYSTEM - CORNERING TC DISABLED (models equipped with optimised cornering TC only)

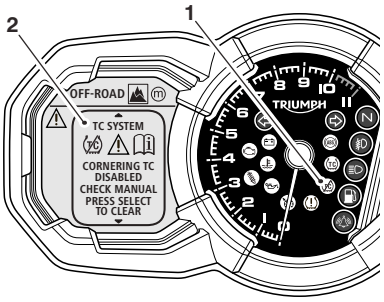

1. **Traction control disabled warning light**
2. **Instrument message**

The message TC SYSTEM - CORNERING TC DISABLED indicates that optimised cornering TC is not functioning.

TC will continue to operate but without the optimised cornering function, provided that:

- TC has no other faults
- TC has not been disabled by the rider (see Bike Setup on page 50 or Riding Mode Configuration on page 62).

Warning

If a fault occurs with optimised cornering traction control, the TC disabled warning light will illuminate and the message TC SYSTEM - CORNERING TC DISABLED will be displayed in the multifunction display.

In this situation, the traction control system will continue to operate but without the optimised cornering function, provided that:

- TC has no other faults
- TC has not been disabled by the rider (see Bike Setup on page 50 or Riding Mode Configuration on page 62).

Care must be taken when accelerating and cornering on wet/slippery road surfaces to avoid rear wheel spin.

The TC disabled warning light may be accompanied by the engine management system malfunction indicator light and/or the ABS warning light.

Do not continue to ride for longer than is necessary with any of the above warning lights illuminated. Contact an authorised Triumph dealer as soon as possible to have the fault checked and rectified.

Hard acceleration and cornering in this situation may cause the rear wheel to spin resulting in loss of motorcycle control and an accident.

See also Traction Control on page 82.

Traction Control (TC) Indicator Light

The TC indicator light is used to indicate that the TC system is active and is working to limit rear wheel slip during periods of hard acceleration or under wet or slippery road conditions.

TC Indicator Light Operation:

TC Switched On (Rain, Road or Sport Settings):

- Under normal riding conditions the indicator light will remain off.
- The indicator light will flash rapidly when the TC system is working to limit rear wheel slip during periods of hard acceleration or under wet or slippery road conditions.

TC Switched On (Off-Road Setting - if equipped):

- Under normal riding conditions, the indicator light will flash slowly to indicate that the TC system is set to Off-Road.
- The TC indicator light will flash rapidly when the TC system is working to limit rear wheel slip during periods of hard acceleration or under wet or slippery conditions.

TC Switched Off:

The indicator light will not illuminate. Instead the TC disabled warning light will be illuminated (see page 28).

Note:

- **TC and optimised cornering TC (if equipped) may not function if there is a malfunction with the ABS system. In this situation, the warning lights for the ABS, TC and the MIL may be illuminated.**

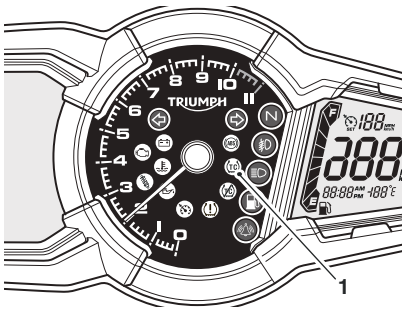

1. **Traction control indicator light**

Engine Management System Malfunction Indicator Light (MIL)

The Malfunction Indicator Light (MIL) illuminates when the ignition is switched on to indicate that the engine management system is working, but should go off when the engine is started.

The MIL should not illuminate when the engine is running.

If the MIL becomes illuminated when the engine is running, this indicates that a fault has occurred in one or more of the systems controlled by the engine management system. In such circumstances, the engine management system will switch to limp-home mode so that the journey may be completed, if the fault is not so severe that the engine will not run.

Warning

Reduce speed and do not continue to ride for longer than is necessary with the MIL illuminated. The fault may adversely affect engine performance, exhaust emissions and fuel consumption. Reduced engine performance could cause a dangerous riding condition, leading to loss of motorcycle control and an accident. Contact an authorised Triumph dealer as soon as possible to have the fault checked and rectified.

Note:

- **If the MIL flashes when the ignition is switched on, contact an authorised Triumph dealer as soon as possible to have the situation rectified. In these circumstances the engine will not start.**

High Coolant Temperature Warning Light

With the engine running, if the engine coolant temperature becomes dangerously high, the high coolant temperature warning light in the tachometer will illuminate.

Caution

Stop the engine immediately if the high coolant temperature warning light illuminates. Do not restart the engine until the fault has been rectified.

Severe engine damage will result from running the engine when the high coolant temperature warning light is illuminated.

Low Oil Pressure Warning Light

With the engine running, if the engine oil pressure becomes dangerously low, the low oil pressure warning light in the tachometer will illuminate and WARNING - OIL PRESSURE LOW will be displayed in the multifunction display screen.

Caution

Stop the engine immediately if the low oil pressure warning light illuminates. Do not restart the engine until the fault has been rectified.

Severe engine damage will result from running the engine when the low oil pressure warning light is illuminated.

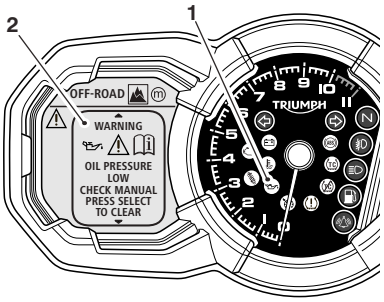

1. **Low oil pressure warning light**
2. **Instrument message**

The low oil pressure warning light in the tachometer will illuminate if the ignition is switched on without running the engine.

Tyre Pressure Warning Light (If TPMS is fitted)

The tyre pressure warning light works in conjunction with the tyre pressure monitoring system (see page 84).

The warning light will only illuminate when the front or rear tyre pressure is below the recommended pressure. It will not illuminate if the tyre is over inflated.

When the warning light is illuminated, the message TPMS - FRONT/REAR TYRE LOW PRESSURE will be visible in the multifunction display screen.

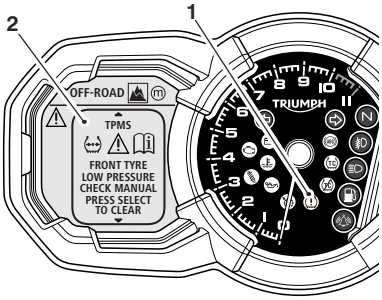

1. **Tyre pressure warning light**
2. **Instrument message**

Press the SELECT button to acknowledge the message and return to the home screen.

After pressing SELECT, the tyre pressures display will be automatically displayed in the motorcycle information section of the home screen.

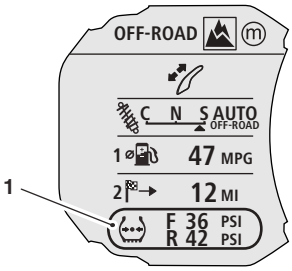

1. Tyre pressures display

The tyre pressure at which the warning light illuminates is temperature compensated to 20°C but the numeric pressure display associated with it is not (see page 156). Even if the numeric display seems at or close to the standard tyre pressure when the warning light is on, a low tyre pressure is indicated and a puncture is the most likely cause.

Warning

Stop the motorcycle if the tyre pressure warning light illuminates and the message TPMS - FRONT/REAR TYRE LOW PRESSURE is displayed. Do not ride the motorcycle until the tyres have been checked and the tyre pressures are at their recommended pressure when cold.

Triumph Semi Active Suspension (TSAS) Warning Light (if fitted)

When the ignition is switched on the warning light will illuminate for 1.5 seconds and then go out.

The warning light has two modes:

Calibration

The TSAS system will recalibrate adjustment motors under the following conditions:

- If the battery has been disconnected for any reason.
- If a fault occurs with the TSAS system during normal operation.

The warning light will flash twice every second during system recalibration, and TSAS SYSTEM CALIBRATING PLEASE WAIT will be displayed in the multifunction display.

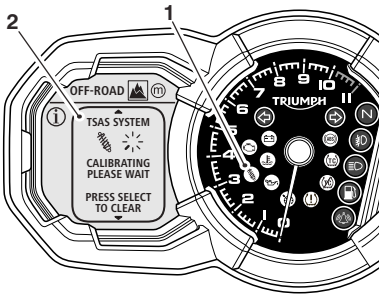

1. TSAS warning light
2. Instrument message

During recalibration the motorcycle must remain stationary. Riding the motorcycle will cause the recalibration to be halted and the warning light to remain lit.

Fault

If the warning light illuminates continuously or at any other time it indicates one of the following:

- A system recalibration has been interrupted. Allow the system to recalibrate as described on page 81.
- A fault has occurred with the system that requires investigation. The message WARNING - TSAS SYSTEM FAULT will be displayed in the multifunction display. Allow the system to recalibrate as described on page 81. If the fault is still present after recalibration, contact an authorised Triumph dealer as soon as possible to have the fault checked and rectified.

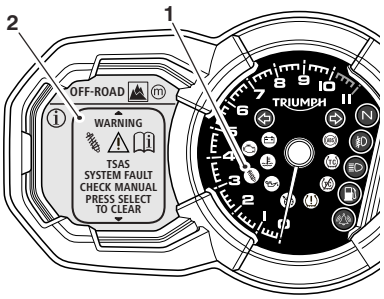

1. **TSAS warning light**
2. **Instrument message**

Full details of the Triumph Semi Active Suspension (TSAS) system are described starting on page 80.

Frost Symbol

The frost symbol will illuminate If the ambient air temperature is 4°C (39°F) or lower.

The frost symbol will remain illuminated until the temperature rises to 6°C (42°F).

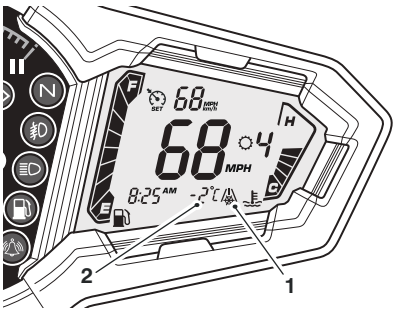

1. **Frost symbol**
2. **Ambient air temperature**

Warning

Black ice (sometimes called clear ice) can form at temperatures several degrees above freezing (0°C (32°F)), especially on bridges and in shaded areas.

Always take extra care when the temperatures are low and reduce speed in potentially hazardous driving conditions such as bad weather.

Excess speed, hard acceleration, heavy braking or hard cornering when roads are slippery may result in loss of motorcycle control and an accident.

Warning and Information Messages

Warning Messages

The following Warning messages may be displayed if a fault is detected:

- OIL PRESSURE LOW (see page 32)
- BATTERY LOW (see page 24)
- ABS SYSTEM DISABLED (see page 25)
- CORNERING ABS DISABLED (see page 25)
- TC SYSTEM DISABLED (see page 28)
- CORNERING TC DISABLED (see page 28)
- TSAS SYSTEM FAULT (see page 33)
- FRONT/REAR TYRE PRESSURE LOW (see page 32)
- SENSOR SIGNAL FRONT/REAR TYRE (see page 84).

Information Messages

The following information messages may be displayed:

- TSAS SYSTEM CALIBRATING - PLEASE WAIT (see page 33)
- TPMS - BATTERY LOW FRONT/REAR TYRE (see page 33)
- HILL HOLD ACTIVATED (see page 121)
- HILL HOLD DEACTIVATED (see page 121)
- HILL HOLD UNAVAILABLE (see page 121).

When a warning or information message is activated, the message will be accompanied by the relevant warning or information symbol on the left hand side of the multifunction display.

It is possible for multiple warning and information messages to be displayed when a fault occurs. Where this is the case, warning messages will take priority over information messages and the warning symbol will be displayed on the left hand side of the multifunction display.

The number of currently active warning and information messages is displayed over the warning/information symbol.

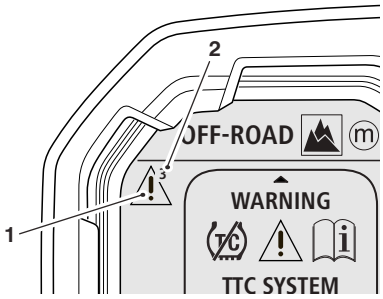

1. **Symbol (warning symbol shown)**
2. **Multiple messages indicated**

Use the SCROLL button to scroll through the messages being displayed.

Press the SELECT button to acknowledge and hide each message.

Note:

- **Some messages are automatically hidden after a short period.**
- **Hidden warning and information messages remain active and will be re-displayed each time the ignition is switched on, until the condition that triggered the message has been rectified.**
- **The warning or information symbol will remain visible in the multifunction display while active messages are hidden, along with the number of hidden messages.**
- **Hidden warning or information messages can be viewed using the Show Warnings function as described in Settings Menu on page 48.**

Tachometer

The tachometer shows the engine speed in revolutions per minute – rpm (r/min). At the end of the tachometer range there is the red zone.

Engine rpm (r/min) in the red zone is above maximum recommended engine speed and is also above the range for best performance.

Caution

Never allow engine rpm to enter the red zone as severe engine damage may result.

Motorcycle Status Display Screen

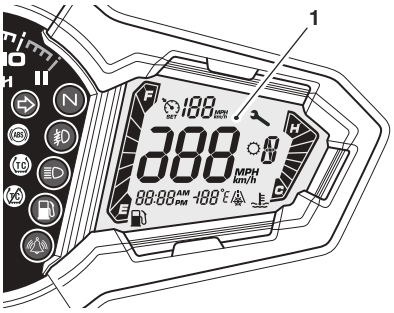

1. Motorcycle status display screen

The motorcycle status display screen is used to display the following:

- Speedometer
- Fuel gauge
- Coolant temperature gauge
- Gear position display
- Cruise control set speed
- Service/maintenance indicator
- Clock
- Ambient air temperature and frost symbol.

Speedometer

The digital speedometer indicates the road speed of the motorcycle. The read-out displays the motorcycle road speed in increments of one mile (or kilometre) per hour.

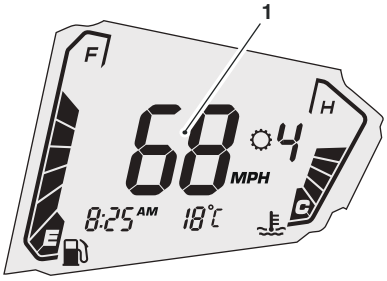

1. Speedometer

Fuel Gauge

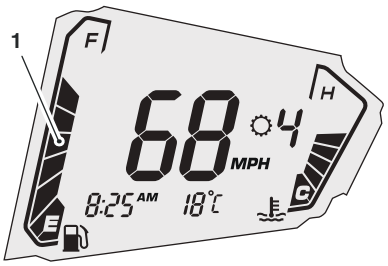

1. Fuel gauge

The fuel gauge indicates the amount of fuel in the tank.

With the ignition switched on, the number of bars shown in the display indicates the level of fuel.

When the fuel tank is full all eight bars are displayed and when empty, no bars are displayed. Other gauge markings indicate intermediate fuel levels between full and empty.

The low fuel warning light will illuminate when there are approximately 3.5 litres of fuel remaining in the fuel tank (see page 24). At this point, two bars will be visible in the fuel gauge and the information display in the multifunction display screen will switch to the Range to Empty display (see page 47).

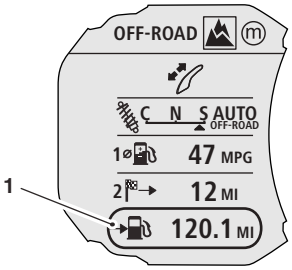

1. Range to empty display

Refuel at the earliest opportunity when the low fuel warning light is illuminated (see page 87).

After refuelling, the fuel gauge and range to empty information will be updated only while riding the motorcycle. Depending on the riding style, updating could take up to five minutes.

Coolant Temperature Gauge

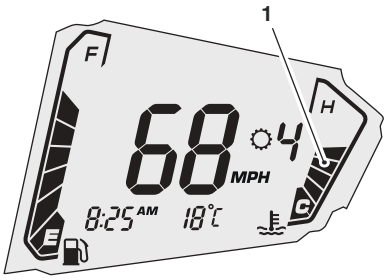

1. Coolant temperature gauge

The coolant temperature gauge indicates the temperature of the engine coolant.

When the ignition is switched on, all eight bars of the display will be shown. When the engine is started from cold the display will show no bars. As the temperature increases more bars in the display will be shown. When the engine is started from hot the display will show the relevant number of bars, dependent on engine temperature.

The normal temperature range is between four and six bars.

If the coolant temperature becomes too high the display will show eight bars and will start to flash. The high coolant temperature light in the tachometer will also flash.

Caution

Do not continue to run the engine if either of the high temperature warnings are displayed as severe engine damage may result.

Gear Position Display

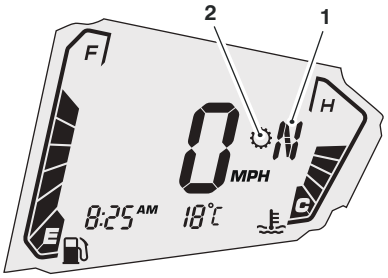

1. Gear position display (neutral position displayed)
2. Gear position symbol

The gear position display indicates which gear (one to six) has been engaged. When the transmission is in neutral (no gear selected), the display will show N.

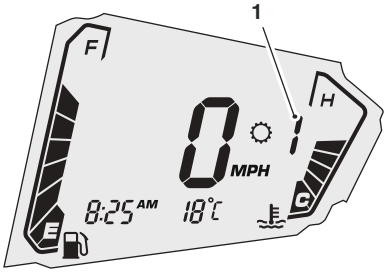

1. Gear position display (first gear shown)

Cruise Control Set Speed (If Cruise Control is fitted)

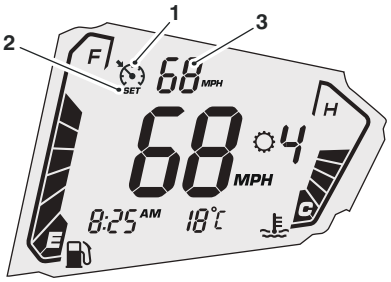

1. **Cruise control symbol**
2. **Cruise control set indicator**
3. **Cruise control set speed**

When cruise control is switched on, the cruise control symbol will be visible in the motorcycle status display screen.

The cruise control set speed will be displayed as -- until a speed has been set.

Upon setting a speed, the word SET will be visible below the cruise control symbol. The set speed will be displayed and the cruise control light in the tachometer will be illuminated.

When cruise control is deactivated, the cruise control light in the tachometer will go out but the set speed will remain visible in the motorcycle status display screen.

For more information see Cruise Control on page 76.

Service/Maintenance Indicator

When the ignition is switched on and the distance to the next service is 500 miles (800 km) or less, the multifunction display will briefly show the distance remaining before the next service in the startup screen.

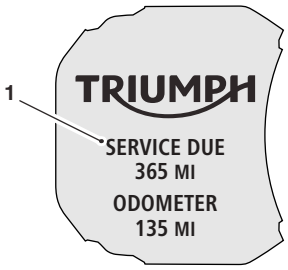

1. **Distance to next service**

If the service is overdue the distance will be displayed as a negative number and the service/maintenance indicator will be displayed in the motorcycle status display screen.

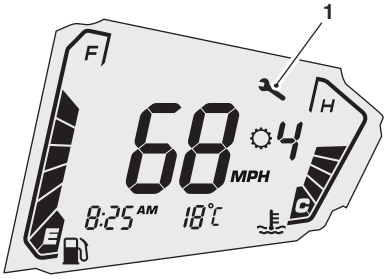

1. **Service/maintenance indicator**

When the service has been carried out by your authorised Triumph dealer, the system will be reset.

The service/maintenance indicator will also be displayed if a fault has occurred and the ABS and/or MIL warning lights are illuminated. Contact an authorised Triumph dealer as soon as possible to have the fault checked and rectified.

Clock

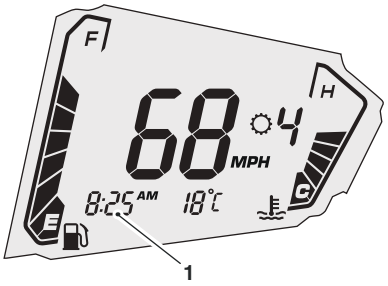

1. Clock - 12 hour format displayed

The clock can be displayed in 12 hour or 24 hour format.

To set the clock see Display Setup on page 55.

Ambient Air Temperature

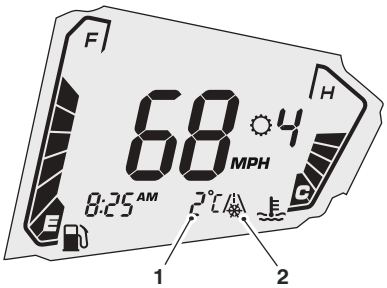

1. Ambient air temperature shown in °C
2. Frost symbol

The ambient air temperature is displayed in °C or °F.

The frost symbol will illuminate if the ambient air temperature is 4°C (39°F) or lower (see page 34).

When the motorcycle is stationary the heat of the engine may affect the accuracy of the ambient temperature display.

Once the motorcycle starts moving the display will return to normal after a short time.

To change the temperature from °C or °F, see Display Setup on page 55.

Multifunction Display Screen

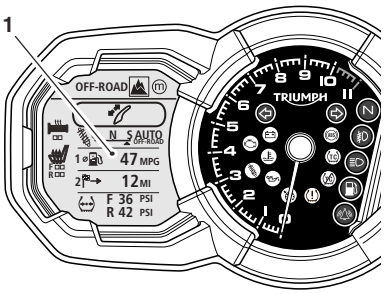

1. Multifunction display screen

The multifunction display screen allows the rider to view, select or configure:

- Riding modes
- Windscreen position
- TSAS settings (if fitted)
- Trip computers
- Motorcycle information
- Motorcycle settings
- Display settings
- Heated seats status (if fitted)
- Heated grips status (if fitted).

The multifunction display screen is also used to display warning and information messages.

See page 35 for more information on warning and information messages.

Home Screen

The multifunction display's home screen is used to display the current riding mode, windscreen adjustment mode, TSAS settings (if fitted), trip meters, motorcycle information, heated grips status (if fitted) and heated seats status (if fitted).

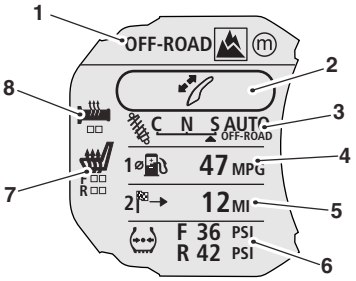

1. **Current riding mode**
2. **Windscreen adjustment mode**
3. **Current TSAS settings (if fitted)**
4. **Trip 1 display**
5. **Trip 2 display (if activated)**
6. **Motorcycle Information display**
7. **Heated seats status (if fitted)**
8. **Heated grips status (if fitted)**

The home screen will display one trip meter as default but can be configured to display two trip meters. See Trip Setup on page 49.

To adjust or edit the home screen items, press and release the SCROLL button on the left hand handlebar switch housing until the desired item is highlighted.

Press and release the SELECT button on the left hand handlebar switch housing to access the selected item's sub menu or adjustment screen.

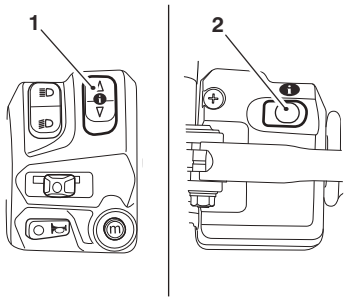

1. **SCROLL button**
2. **SELECT button**

Pressing and holding the SELECT button with the bike stationary will access the settings menu (see Settings Menu on page 48).

Riding Mode Display

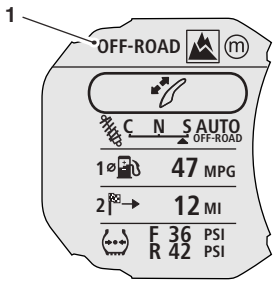

1. **Current riding mode display**

Shows the current riding mode. See page 57 for more information on riding modes.

Windscreen Adjustment Mode

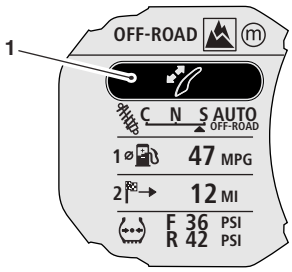

1. **Windscreen adjustment mode**

To access the windscreen adjustment mode, press the SCROLL button until the windscreen adjust display is highlighted.

Press the SELECT button to activate the windscreen adjustment mode.

Use the SCROLL button to adjust the windscreen to the desired height.

There is a short time-out period to allow for further adjustment to take place before the instruments automatically exit the windscreen adjustment mode.

Alternatively, press the SELECT button to exit the windscreen adjustment mode.

For more information on windscreen adjustment see Windscreen on page 90.

Triumph Semi Active Suspension (TSAS) Settings (if fitted)

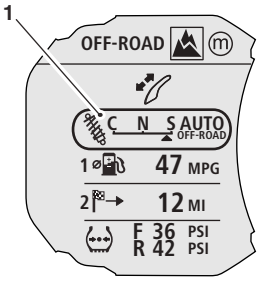

1. TSAS setting

To access the TSAS adjustment mode, press the SCROLL button until the TSAS settings display is highlighted.

Press the SELECT button to activate the TSAS adjustment mode.

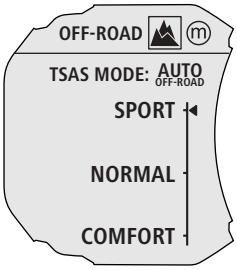

TSAS Adjustment Mode (Sport selected)

Note:

- **If the riding modes link is disabled (as described on page 53), changes made to the TSAS damping settings will remain active until further adjustment takes place, regardless of riding mode selection.**
- **If the riding modes link is enabled (as described on page 53), any adjustments made to the TSAS damping settings will be saved to the currently active riding mode. The new TSAS settings will be automatically recalled whenever the riding mode is reselected. The riding mode's previous TSAS settings will be overwritten.**
- **If the riding modes link is enabled and a new riding mode is selected, the new riding mode's TSAS settings will automatically become active.**

TSAS has nine damping settings ranging from COMFORT (soft) to SPORT (firm).

Pressing and releasing the SCROLL button allows individual selection of each of the nine settings.

Pressing and holding the SCROLL buttons allows direct selection of the preset COMFORT, NORMAL and SPORT settings.

There is a short time-out period to allow for further scrolling to take place. After the time-out period has elapsed, the selected damping setting will be automatically activated and the display will return to the home screen.

Alternatively, press the SELECT button to confirm your setting and return to the home screen.

See page 80 for a full description of TSAS.

Trip Meters

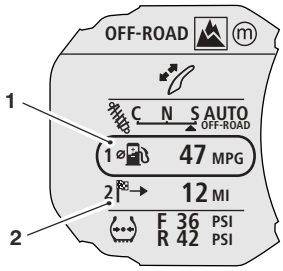

1. **Trip meter 1 display**
2. **Trip meter 2 display (if activated)**

The home screen will permanently display trip meter one as default, but can be configured to display two trip meters. See Trip Setup on page 49.

Explorer XR and Explorer XC Models Only

Only the journey distance trip meter display is available. This is permanently displayed on the home screen and no further trip meter menus can be accessed. The journey distance display can be reset as described in Trip Meter Reset on page 46.

All Models Except Explorer XR and Explorer XC

To access a trip meter menu press the SCROLL button until the desired trip meter display is highlighted.

Press the SELECT button to enter the trip meter menu.

The following trip meter items will be displayed:

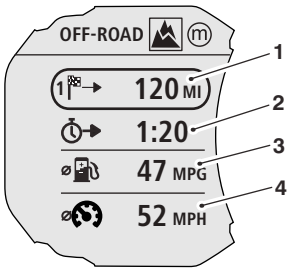

1. **Journey distance**
2. **Journey time**
3. **Average fuel consumption**
4. **Average speed**

Any one of the above trip meter items can be selected for display in the home screen.

To select a trip meter item for display in the home screen, press the SCROLL button until the desired trip meter item is highlighted.

Press the SELECT button to confirm your selection and return to the home screen. The selected item will be displayed.

Each display provides the following information:

Journey Distance

The total journey distance travelled since the trip meter was last reset to zero.

Journey Time

The total journey time elapsed since the trip meter was last reset to zero.

Average Fuel Consumption

An indication of the average fuel consumption since the trip meter was last reset to zero. After being reset the display will show dashes until 0.1 mile/km has been covered.

Average Speed

The average speed is calculated from when the trip computer was last reset to zero. After being reset the display will show dashes until one mile/km has been covered.

Trip Meter Reset

To reset either of the trip meters, from the home screen select the trip meter to be zeroed, then press and hold the SCROLL button in either direction for two seconds. After two seconds, all items within the selected trip meter will reset to zero.

Trip 2 can also be set to automatically reset after an adjustable time delay of between one and eight hours. See Trip Setup on page 49.

Motorcycle Information

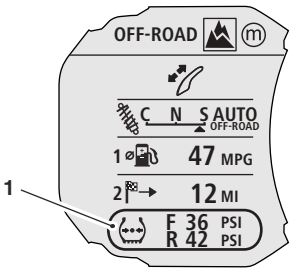

1. Motorcycle information display

The motorcycle information display shows the currently selected motorcycle information item.

Note:

- **For Explorer XR and Explorer XC models, only the odometer display is equipped as standard and no further information menu items will be available for selection unless TPMS is fitted as an accessory option.**
- **If TPMS is fitted, the tyre pressures display will be available for selection.**
- **For all models, the motorcycle information display will automatically switch to the Range to Empty display when the low fuel warning light is illuminated.**

To access the motorcycle information menu press the SCROLL button until the motorcycle information display is highlighted.

Press the SELECT button to enter the motorcycle information menu.

Motorcycle Information Menu

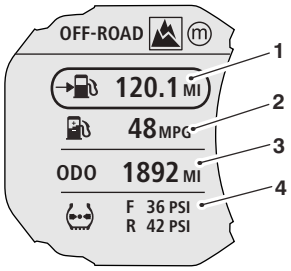

1. **Range to empty**
2. **Instantaneous fuel consumption**
3. **Odometer**
4. **Tyre pressures (if TPMS is fitted)**

Any one of the available information items can be selected for display in the home screen.

To select an information item for display in the home screen, press the SCROLL button until the desired information item is highlighted.

Press the SELECT button to confirm your selection and return to the home screen.

Each display provides the following information:

Range to Empty

This is an indication of the probable distance that can be travelled on the remaining fuel in the tank.

The distance shown will adapt based on the level of fuel in the tank and changes to your riding style.

Instantaneous Fuel Consumption

An indication of the fuel consumption at an instant in time. If the motorcycle is stationary, --.- will be visible in the display area.

Odometer

Shows the total distance that the motorcycle has travelled.

Front and Rear Tyre Pressures (If TPMS is fitted, see page 84)

The front and rear tyre pressures are displayed.

Dashes will be displayed in the tyre pressure display until the motorcycle reaches a speed of approximately 12 mph (20 km/h).

Warning

When the motorcycle is in motion, only attempt to switch between the information and trip meter display modes or reset the trip meter under the following conditions:

- At low speed
- In traffic-free areas
- On straight and level roads or surfaces
- In good road and weather conditions.

Failure to observe this important warning could lead to loss of motorcycle control and an accident.

Settings Menu

To access the settings menu; with the motorcycle stationary, press and hold the SELECT button on the left hand switch housing until the settings menu is displayed in the multifunction display screen.

Press and release the SCROLL button until the desired item is highlighted.

Press the SELECT button to enter the item's sub menu.

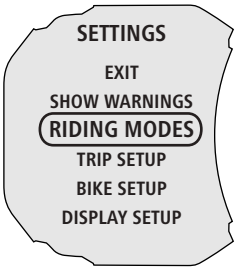

Settings Menu

The following menu items are available for selection:

- EXIT
- SHOW WARNINGS (see page 49)
- RIDING MODES (see page 49)
- TRIP SETUP (see page 49)
- BIKE SETUP (see page 50)
- DISPLAY SETUP (see page 55).

Each menu item can be edited as follows:

Note:

- **Selecting EXIT will return the display to the home screen.**

Show Warnings

Selecting SHOW WARNINGS will exit the settings menu and display all active warning or information messages in the multifunction display screen.

See page 35 for more information on warning and information messages.

Riding Modes

Selecting Riding Modes allows the rider to configure the ABS, MAP, TC and TSAS settings for each available riding mode.

See page 62 for more information on riding mode configuration.

Trip Setup

Access the settings menu as described on page 48 and select TRIP SETUP.

After entering the TRIP SETUP menu, press and release the SCROLL button until the desired item is highlighted. Press the SELECT button to enter the item.

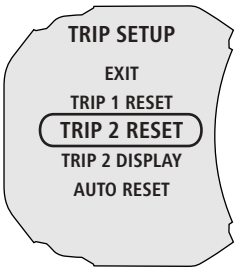

Trip Setup Screen

The following menu items are available for selection:

- EXIT
- TRIP 1 RESET
- TRIP 2 RESET
- TRIP 2 DISPLAY
- AUTO RESET.

Note:

- **Selecting EXIT will return the display to the SETTINGS menu.**

Trip 1 and Trip 2 Reset

After entering TRIP 1 or TRIP 2 RESET, the instruments will prompt you to select CONFIRM or CANCEL.

Trip 1 Reset Shown

To reset the trip meter, use the SCROLL button to select CONFIRM, then press the SELECT button.

All items within the selected trip meter will be immediately reset to zero and the display will return to the TRIP SETUP menu.

Trip 2 Display

It is possible enable or disable the trip 2 display in the home screen.

To enable or disable the trip 2 display, press the SCROLL button to select TRIP 2 DISPLAY, then press the SELECT button.

Press the SCROLL button to select ENABLE or DISABLE.

Trip 2 Display - (ENABLE Shown)

Press the SELECT button to confirm your selection and return to the TRIP SETUP menu.

Auto Reset

Note:

- **The AUTO RESET function applies to TRIP 2 only. TRIP 1 must be reset manually using TRIP 1 RESET as described on page 49, or the Trip Meter Reset method described on page 46.**

After entering the AUTO RESET setup screen, the instruments will prompt you to select OFF, 1 HR, 2 HRS, 4 HRS or 8 HRS.

Auto Reset

Press the SCROLL button until the desired setting is displayed.

Press the SELECT button to confirm your selection and return to the TRIP SETUP menu.

After the ignition as been switched off and the set time has elapsed, all items within Trip 2 will be reset to zero.

Bike Setup

Access the settings menu as described on page 48 and select BIKE SETUP.

After entering the BIKE SETUP menu, press and release the SCROLL button until the desired item is highlighted. Press the SELECT button to enter the item.

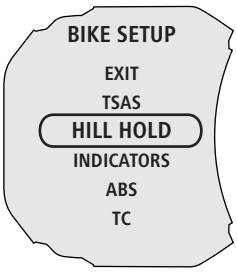

Bike Setup Menu - Explorer XRT Shown

The following menu items are available for selection:

Explorer XR and Explorer XC Only

- EXIT
- ABS - ABS disable/enable
- TC - TC disable/enable.

Explorer XRx and Explorer XCx - All Models

- EXIT
- TSAS
- INDICATORS
- ABS - ABS disable/enable
- TC - TC disable/enable.

Explorer XRT and Explorer XCA Only

- EXIT
- TSAS
- HILL HOLD
- INDICATORS
- ABS - ABS disable/enable
- TC - TC disable/enable.

Note:

- **Selecting EXIT will return the display to the SETTINGS menu.**

ABS Disable/Enable

It is possible to temporarily disable the ABS system. The ABS system cannot be permanently disabled, it will be automatically enabled when the ignition is turned off and then on again.

Warning

Do not attempt to adjust the ABS settings while the motorcycle is in motion as this may lead to loss of motorcycle control and an accident.

Warning

Selecting ABS DISABLE will disable the anti-lock braking system.

The optimised cornering ABS (if equipped) will also be disabled and the ABS settings stored for each riding mode will be overridden, regardless of whether they are set to Road, Off-Road or OFF.

ABS, optimised cornering ABS (if equipped) and the riding mode ABS settings will not be enabled again until ENABLE is selected from the ABS menu as described in the following procedure, or the ignition is turned off then on again.

If the ABS is disabled, the brake system will function as a non-ABS braking system. In this situation braking too hard will cause the wheels to lock, and may result in loss of motorcycle control and an accident.

After entering the ABS screen press the SCROLL button to select ENABLE or DISABLE.

ABS (ENABLE Shown)

Press the SELECT button to confirm your selection and return to the BIKE SETUP menu.

If DISABLE is selected, the ABS warning light will be illuminated and the message WARNING - ABS SYSTEM DISABLED will be briefly displayed in the multifunction display screen.

ABS, optimised cornering ABS (if equipped) and all riding mode ABS settings will be disabled until the ABS is re-enabled.

Note:

- **If the ABS is disabled by the rider, traction control, cruise control (if equipped) and hill hold (if equipped) will still function.**

ABS, optimised cornering ABS (if equipped) and the riding mode ABS settings will be automatically enabled when the ignition is turned off and then on again.

TC Disable/Enable

It is possible to temporarily disable the TC system. The TC system cannot be permanently disabled, it will be automatically enabled when the ignition is turned off and then on again.

Warning

Selecting TC DISABLE will disable the traction control system.

Optimised cornering traction control (if equipped) will also be disabled and the TC settings stored for each riding mode will be overridden regardless of whether they are set to Rain, Road, Sport, Off-Road or Off.

TC, optimised cornering TC and the riding mode TC settings will not be enabled again until ENABLE is selected from the TC menu as described in the following procedure, or the ignition is turned off then on again.

If traction control is disabled, the motorcycle will handle as normal but without traction control. In this situation accelerating too hard on wet/slippery road surfaces may cause the rear wheel to slip, and may result in loss of motorcycle control and an accident.

After entering the TC screen press the SCROLL button to select ENABLE or DISABLE.

TC (ENABLE Shown)

Press the SELECT button to confirm your selection and return to the BIKE SETUP menu.

If DISABLE is selected, the TC disabled warning light will be illuminated and the message WARNING - TC SYSTEM DISABLED will be briefly displayed in the multifunction display screen.

TC, optimised cornering TC (if equipped) and all riding mode TC settings will be disabled until TC is re-enabled.

TC, optimised cornering TC (if equipped) and the riding mode TC settings will be automatically enabled when the ignition is turned OFF and then ON again.

TSAS Menu (if fitted)

After entering the TSAS screen, press the SCROLL button until the desired item is highlighted. Press the SELECT button to enter the item.

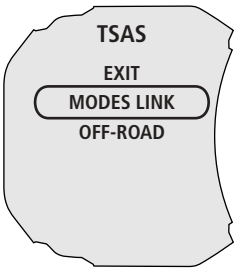

TSAS Menu

Note:

- **Selecting EXIT will return the display to the BIKE SETUP menu.**

TSAS Modes Link

The TSAS system settings can be linked to the riding mode system. This allows the rider to set different TSAS settings for each riding mode, during riding mode configuration.

When a riding mode is selected, the TSAS settings for that riding mode will be automatically recalled and activated.

To enable or disable the TSAS modes link, after entering the MODES LINK screen, press the SCROLL button to select ENABLE or DISABLE.

Riding Modes Link (ENABLE Shown)

Press the SELECT button to confirm your selection and return to the TSAS menu.

See page 62 for more information on riding mode configuration.

Off-Road

The TSAS off-road mode can set to one of the following conditions:

- Enabled - TSAS is set to off-road mode.
- Auto - The TSAS system will automatically detect the type of surface being ridden (on-road or off-road) and will adjust rebound and compression damping settings accordingly.

After entering the OFF-ROAD menu, press the SCROLL button to select DISABLE, ENABLE or AUTO.

Press the SELECT button to confirm your selection and return to the TSAS menu.

Note:

- **If the TSAS Modes Link is enabled, any changes will be automatically stored to the currently selected riding mode.**

Hill Hold - Explorer XRT and Explorer XCA Models Only

After entering the HILL HOLD screen press the SCROLL button to select ENABLE or DISABLE.

Hill Hold (ENABLE Shown)

Press the SELECT button to confirm your selection and return to the BIKE SETUP menu.

See page 121 for more information on the hill hold function.

Indicators - All Models Except Explorer XR and Explorer XC

After entering the INDICATORS screen press the SCROLL button to select AUTO or MANUAL.

Indicator Self Cancelling (AUTO Shown)

Press the SELECT button to confirm your selection and return to the BIKE SETUP menu.

See Automatic Self-cancelling Indicators on page 72 for more information.

Display Setup

Access the settings menu as described on page 48 and select DISPLAY SETUP.

After entering the DISPLAY SETUP menu, press and release the SCROLL button until the desired item is highlighted. Press the SELECT button to enter the item.

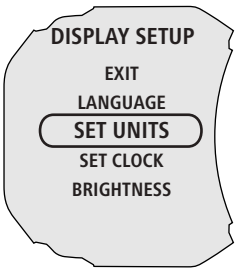

Display Setup Menu

The following menu items are available for selection:

- EXIT
- LANGUAGE
- SET UNITS
- SET CLOCK
- BRIGHTNESS.

Note:

- **Selecting EXIT will return the display to the SETTINGS menu.**

Language

After entering the LANGUAGE screen, press and release the SCROLL button until the desired language is highlighted.

Language Select

The following languages are available for selection:

- English
- French
- German
- Italian
- Dutch
- Spanish
- Swedish
- Brazilian.

Note:

- **All menu items displayed will change to the newly selected language when SELECT is pressed.**

Press the SELECT button to confirm your selection and return to the DISPLAY SETUP menu.

Set Units

After entering the SET UNITS screen, the instruments will prompt for DISTANCE.

Press the SCROLL button to select MILE or KM and press SELECT.

Units Select

The instruments will now prompt ECONOMY.

Note:

- **If DISTANCE has been set to MILE, the options available will be MPG (UK) or MPG (US).**
- **If DISTANCE has been set to KM, the options available will be KM/L or L/100 KM.**

Use the SCROLL button to select the desired unit and press SELECT.

Note:

- **If DISTANCE has been set to MILE, the instruments will now prompt TEMP (temperature).**
- **If DISTANCE has been set to KM, the temperature display will be automatically set to °C.**

If DISTANCE has been set to MILE, use the SCROLL button to select either °F or °C and press SELECT.

If TPMS is fitted, the instruments will now prompt PRESSURE.

Use the SCROLL button to select either PSI, BAR or kPa.

Press SELECT to save your settings and return to the DISPLAY SETUP menu.

Set Clock

After entering the SET CLOCK screen, the instruments will prompt for 12 HR or 24 HR.

Press the SCROLL button to select the desired clock display and press SELECT.

Set Clock (24 HR Shown)

The instruments will now prompt SET HOUR. Use the SCROLL button to select the desired hour display and press SELECT.

The instruments will now prompt SET MINUTE. Use the SCROLL button to select the desired minute display and press SELECT to save and return to the DISPLAY SETUP menu.

Brightness

After entering the BRIGHTNESS screen, press the SCROLL button to adjust the instrument brightness using the adjustment slider between levels 1 (lowest) to 10 (highest). Press the SELECT button to save your selection and return to the DISPLAY SETUP menu.

Brightness Adjust

Riding Modes

The riding mode system allows adjustment of the Anti-lock Brake System (ABS), throttle response (MAP), Traction Control (TC) and Triumph Semi-Active Suspension (TSAS) settings to suit differing road conditions and rider preferences.

Riding modes can be conveniently selected using the MODE and SCROLL buttons on the left hand switch housing, whilst the motorcycle is stationary or moving.

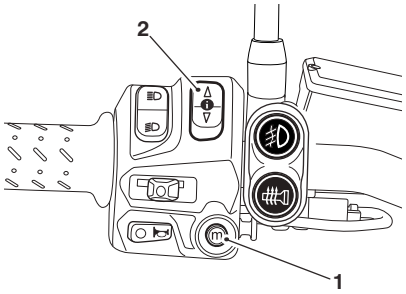

1. **MODE button**
2. **SCROLL button**

Up to five riding modes are available for selection depending on your model's specification.

	RAIN
	ROAD
	SPORT (If equipped)
	OFF-ROAD (If equipped)
	RIDER (If equipped)

Each riding mode is fully adjustable but availability of the ABS, MAP, TC and TSAS settings options may vary between modes. See Riding Mode Configuration on page 62 for more information.

Riding Mode Selection

Warning

The selection of riding modes whilst the motorcycle is in motion requires the rider to allow the motorcycle to coast (motorcycle moving, engine running, throttle closed, clutch lever pulled in and no brakes applied) for a brief period of time.

Riding mode selection whilst the motorcycle is in motion should only be attempted:

- At low speed
- In traffic-free areas
- On straight and level roads or surfaces
- In good road and weather conditions
- Where it is safe to allow the motorcycle to briefly coast.

Riding mode selection whilst the motorcycle is in motion MUST NOT be attempted:

- At high speeds
- Whilst riding in traffic
- During cornering or on winding roads or surfaces
- On steeply inclined roads or surfaces
- In poor road/weather conditions
- Where it is unsafe to allow the motorcycle to coast.

Failure to observe this important warning may lead to loss of motorcycle control and an accident.

Warning

If ABS and/or TC has been disabled using the Bike Setup Menu as described on pages 51 and 52, the ABS and/or TC settings saved for all riding modes will be overridden.

ABS and/or TC will remain OFF regardless of your riding mode selection, until they have been re-enabled or, the ignition has been switch OFF then ON again.

If the ABS is disabled, the brake system will function as a non-ABS braking system. In this situation braking too hard will cause the wheels to lock, and may result in loss of motorcycle control and an accident.

If the traction control is disabled, the motorcycle will handle as normal but without traction control. In this situation accelerating too hard on wet/slippery road surfaces may cause the rear wheel to slip, and may result in loss of motorcycle control and an accident.

Warning

After selecting a riding mode, operate the motorcycle in an area free from traffic to gain familiarity with the new settings. Do not loan your motorcycle to anyone as they may change the riding mode settings from those you are familiar with, causing loss of motorcycle control and an accident.

To select a riding mode, press and release the MODE button on the left hand switch housing to activate the riding mode selection menu in the multifunction display.

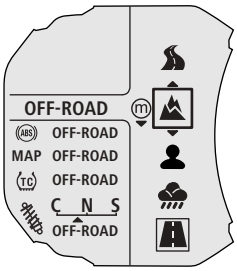

Riding Mode Selection Menu

Further presses of the MODE button will scroll through the riding modes in the following order:

- RAIN
- ROAD
- SPORT
- OFF-ROAD
- RIDER.

Alternatively, the SCROLL button can be used to scroll up or down through the riding modes.

Note:

- **To allow the user to scroll between each of the modes, there is a short time-out to allow for further scrolling to take place before the highlighted riding mode is automatically activated.**

Scroll through the riding modes until the desired mode is highlighted in the selection window.

The name of the highlighted riding mode and its currently stored ABS, MAP, TC and TSAS settings, are displayed on the left hand side of the multifunction display.

The currently active riding mode is indicated with a border.

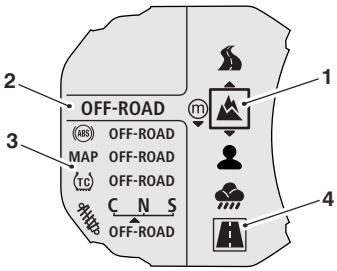

1. **Selection window**
2. **Selected riding mode**
3. **Selected riding mode's ABS, MAP, TC and TSAS settings**
4. **Currently active riding mode**

The riding mode highlighted in the selection window is automatically activated once the time-out has elapsed, and the following conditions for switching modes have been met.

Motorcycle Stationary - Engine Off

- The ignition is switched ON
- The engine stop switch is in the RUN position.

Motorcycle Stationary - Engine On

- Neutral gear is selected or the clutch is pulled in.

Motorcycle in Motion

Within 30 seconds of selecting a riding mode the rider must carry out the following simultaneously:

- Close the throttle
- Pull the clutch in
- Ensure that the brakes are not engaged (allow the motorcycle to coast).

Note:

- **It is not possible to select OFF-ROAD or RIDER modes whilst the motorcycle is in motion, if the ABS or TC settings are set to Off-Road or Off.**
- **In this case, the motorcycle must be brought to a stop before the riding mode change can take place.**

Once the ABS, MAP, TC and TSAS settings have changed, the multifunction display will return to the home screen and the selected riding mode will be displayed.

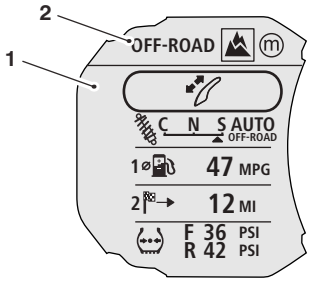

1. **Home screen**
2. **Selected riding mode**

The riding mode change is now complete and normal riding can be resumed.

Note:

- **The riding mode will default to ROAD when the ignition is switched ON if the OFF-ROAD or RIDER Mode was active the last time the ignition was switched OFF, with ABS and/or TC set to Off-Road or Off.**
- **Otherwise, the last selected riding mode will be remembered and activated when the ignition is switched ON.**
- **If the mode icons are not visible when the ignition switch is in the ON position, ensure the engine stop switch is in the RUN position.**

Incomplete Riding Mode Changes

In the event of an incomplete riding mode change, both the previous and newly selected riding modes will be highlighted with a dashed border. This indicates that the ABS, MAP, TC or TSAS settings specified by the newly requested riding mode have not been correctly activated.

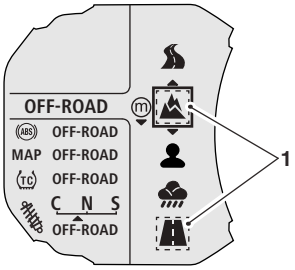

1. Incomplete riding mode change

In this case the MIL, ABS, TC or TSAS warning light(s) may be illuminated depending on the current state of each system.

In the event of an incomplete riding mode change:

- Safely bring the motorcycle to a stop
- Select neutral gear
- Turn the ignition OFF and then back ON again
- Select the desired riding mode
- Restart the engine and continue riding.

Warning

Do not stop the engine using the ignition switch or engine stop switch whilst the motorcycle is moving. Always bring the motorcycle to a stop safely and engage neutral gear prior to stopping the engine.

Stopping the engine by turning off the ignition or engine stop switch whilst the motorcycle is moving can lock the rear wheel causing loss of motorcycle control and an accident.

Caution

Do not stop the engine using the ignition switch or engine stop switch whilst the motorcycle is moving. Always bring the motorcycle to a stop safely and engage neutral gear prior to stopping the engine.

The transmission is pressure-lubricated only when the engine is running. Inadequate lubrication may cause damage or seizure of the transmission, which can lead to sudden loss of motorcycle control and an accident.

Riding Mode Configuration

Refer to the following table for the ABS, MAP, TC and TSAS options available for each riding mode. The factory default settings are indicated with brackets.

Options **(•) indicates the factory default setting**	**Riding Modes**				
	RAIN	**ROAD**	**SPORT**	**OFF-ROAD**	**RIDER**
ABS					
Road	**(•)**	**(•)**	**(•)**		**(•)**
Off-Road				**(•)**	•
Off				•	•
MAP					
Rain	**(•)**	•		•	•
Road	•	**(•)**	•	•	**(•)**
Sport		•	**(•)**	•	•
Off-Road				**(•)**	•
TC					
Rain	**(•)**	•			•
Road	•	**(•)**	•		**(•)**
Sport		•	**(•)**		•
Off-Road				**(•)**	•
Off				•	•
TSAS (if fitted and Riding Modes Link enabled)					
Auto	**(•)**	**(•)**	**(•)**	**(•)**	**(•)**
Off-Road				•	•

ABS Option Descriptions

Warning

The Off-Road ABS option is NOT intended for use with normal, on-road riding.

In the Off-Road ABS setting, optimised cornering ABS is disabled and the level of ABS intervention is adapted for off-road riding.

Use of the rear brake pedal in this situation can cause the rear wheel to lock under heavy braking.

Riding on-road with the ABS set to Off-Road can lead to instability when braking which may result in loss of motorcycle control and an accident.

Warning

If the ABS is disabled, the brake system will function as a non-ABS braking system. In this situation braking too hard will cause the wheels to lock, and may result in loss of motorcycle control and an accident.

- **Road** - Optimal ABS setting for road use.
- **Off-Road** - Optimal ABS setting for off-road use as follows:
  Front Brake Lever Operation
  If the front brake lever is operated only, the partially integrated braking system will also apply a small amount of rear brake as described in Braking on page 115.
  In this situation, the level of ABS intervention is optimised for off-road riding for both front and rear wheels.
  Rear Brake Pedal Operation
  If the rear brake pedal is operated at any point, all rear braking input will be controlled directly by the rear brake pedal.
  Operating the rear brake pedal will override any rear braking input applied by the partially integrated braking system, through use of the front brake lever.
  In this situation, the level of ABS intervention is optimised for off-road riding for the front wheel, but the rear wheel will be allowed to lock under heavy braking.
  Use of the rear brake pedal alone will only apply the rear brake and the rear wheel will be allowed to lock under heavy braking.
  Optimised cornering ABS is disabled for the Off-Road ABS setting.
  The ABS warning light will flash slowly (see page 25).
- **Off** - ABS is turned off. The ABS warning light will be illuminated (see page 25).

MAP Option Descriptions

- **Rain** - Reduced throttle response when compared to the Road setting, for wet or slippery conditions.
- **Road** - Standard throttle response.
- **Sport** - Increased throttle response when compared to the Road setting.
- **Off-Road** - Optimal throttle response setting for off-road use.

TC Option Descriptions

Warning

The Off-Road TC option is not intended for normal, on-road riding.

Riding on-road with TC set to Off-Road can produce instability under acceleration due to the increased amount of rear wheel slip allowed.

Instability caused by rear wheel slip may lead to loss of motorcycle control and an accident.

Warning

If the traction control is disabled, the motorcycle will handle as normal but without traction control. In this situation accelerating too hard on wet/slippery road surfaces may cause the rear wheel to slip, and may result in loss of motorcycle control and an accident.

- **Rain** - Optimal TC setting for wet or slippery conditions. Allows reduced rear wheel slip when compared with the Road setting.
- **Road** - Optimal TC setting for road use, allows a small amount of rear wheel slip.
- **Sport** - Allows increased rear wheel slip when compared with the Road setting.
- **Off-Road** - TC is set up for off-road use, allowing increased rear wheel slip when compared to the Rain, Road and Sport settings. The TC indicator light will flash slowly (see page 30).
- **Off** - TC is turned off. The TC disabled warning light will be illuminated (see page 28).

TSAS Option Descriptions (if fitted and TSAS riding modes link enabled; see Bike Setup on page 50)

- **Auto** - The TSAS system will automatically detect the type of surface being ridden (on-road or off-road) and will adjust rebound and compression damping settings accordingly.
- **Off-Road** - Optimal TSAS setting for off-road use.

Note:

- **During riding mode configuration, ABS and TC can be activated or de-activated in the Off-Road and Rider modes.**
- **If the riding mode being configured is currently selected, adjustments to the ABS, MAP, TC and TSAS systems will become immediately active.**
- **If the riding mode being configured is not currently selected, adjustments to the ABS, MAP, TC and TSAS systems are saved and will become active the next time the riding mode is selected.**

To configure a riding mode, with the motorcycle stationary, press and hold the SELECT button to activate the Settings Menu. Use the SCROLL button to select RIDING MODES then press the SELECT button to enter the Riding Modes menu.

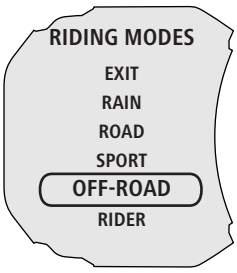

Riding Modes Menu

Use the SCROLL button to highlight the riding mode to be configured, then press SELECT to enter the riding mode's configuration menu.

Alternatively, pressing and holding the MODE button will provide direct access to a riding mode's configuration menu as follows:

From the Home Screen

Pressing and holding the MODE button while in the Home screen will activate the configuration menu for the currently active riding mode.

From the Riding Mode Selection Menu

Pressing and holding the MODE button while in the Riding Mode selection menu will activate the configuration menu for the riding mode highlighted for selection.

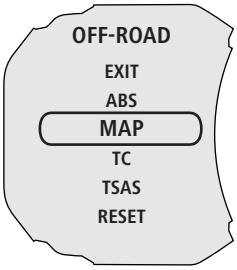

Configuration Menu
(Off-Road Mode Selected)

After entering a riding mode's configuration menu, press the SCROLL button until the desired item is highlighted. Press the SELECT button to enter the item's settings.

Note:

- **Selecting EXIT will return the display to the Riding Modes menu.**

ABS

After entering the ABS screen, press the SCROLL button to select the desired option. Press the SELECT button to confirm your selection and return to the configuration menu.

ABS Screen (Road Selected)

Warning

If the ABS is disabled, the brake system will function as a non-ABS braking system. In this situation braking too hard will cause the wheels to lock, and may result in loss of motorcycle control and an accident.

MAP

After entering the MAP screen, press the SCROLL button to select the desired option. Press the SELECT button to confirm your selection and return to the configuration menu.

MAP Screen (Sport Selected)

TC

After entering the TC screen, press the SCROLL button to select the desired option. Press the SELECT button to confirm your selection and return to the configuration menu.

TC Screen (Sport Selected)

Warning

If the traction control is disabled, the motorcycle will handle as normal but without traction control. In this situation accelerating too hard on wet/slippery road surfaces may cause the rear wheel to slip, and may result in loss of motorcycle control and an accident.

TSAS (if fitted and Riding Modes Link Enabled)

After entering the TSAS screen, press the SCROLL button to select the desired TSAS mode.

TSAS Screen (Auto Selected)

Press the SELECT button to confirm your selection and progress to the TSAS settings screen.

The instruments will now prompt for a TSAS damping setting.

Note:

- **If the TSAS mode has been set to AUTO, the instruments will prompt for damping settings for both on-road and off-road riding conditions.**

TSAS has nine damping settings ranging from COMFORT (soft) to SPORT (firm).

Pressing and releasing the SCROLL button allows individual selection of each of the nine settings.

Pressing and holding the SCROLL buttons allows direct selection of the preset C (Comfort), N (Normal) and S (Sport) settings.

TSAS Damping Setting Screen (OFF-ROAD shown)

Press the SELECT button to confirm your selection and return to the configuration menu.

RESET

After entering the RESET screen, the instruments will prompt you to select CONFIRM or CANCEL.

Riding Mode Reset

Use the SCROLL button to select CONFIRM or CANCEL. Press the SELECT button to confirm your selection and return to the configuration menu.

Selecting CONFIRM will return the selected riding mode's configuration to the factory default settings.

Refer to the table on page 62 for details of the factory default settings for each riding mode.

Ignition Key

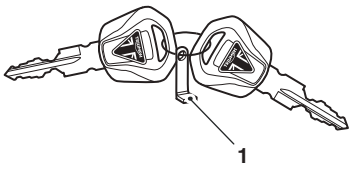

cixj

1. Key number tag

In addition to operating the steering lock/ignition switch, the ignition key is required to operate the seat lock, fuel tank cap and panniers (if fitted).

When the motorcycle is delivered from the factory, two keys are supplied together with a small tag bearing the key number. Make a note of the key number and store the spare key and key number tag in a safe place away from the motorcycle.

A transponder is fitted within each key to turn off the engine immobiliser. To ensure the immobiliser functions correctly, always have only one of the ignition keys near the ignition switch. Having two ignition keys near the switch may interrupt the signal between the transponder and the engine immobiliser. In this situation the engine immobiliser will remain active until one of the ignition keys is removed.

Always get replacement keys from your authorised Triumph dealer. Replacement keys must be paired with the motorcycle's immobiliser by your authorised Triumph dealer.

Caution

Do not store the spare key with the motorcycle as this will reduce all aspects of security.

Ignition Switch/Steering Lock

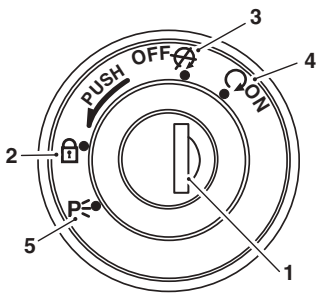

1. **Ignition switch/steering lock**
2. **LOCK position**
3. **OFF position**
4. **ON position**
5. **PARK position**

Engine immobiliser

The ignition barrel housing acts as the antenna for the engine immobiliser.

When the ignition switch is turned to the OFF position and the ignition key is removed, the engine immobiliser is on (see page 27). The engine immobiliser is turned off when the ignition key is in the ignition switch and it is turned to the ON position.

Ignition Switch Positions

This is a four-position, key operated switch. The key can be removed from the switch only when it is in the OFF, LOCK or P (PARK) position.

TO LOCK: Turn the handlebar fully to the left, turn the key to the OFF position, push and fully release the key, then rotate it to the LOCK position.

PARKING: Turn the key from the LOCK position to the P position. The steering will remain locked, and the position lights will be switched on.

Note:

- **Do not leave the steering lock in the P position for long periods of time as this will cause the battery to discharge.**

Warning

For reasons of security and safety, always move the ignition switch to the OFF, LOCK or PARK position and remove the key when leaving the motorcycle unattended.

Any unauthorised use of the motorcycle may cause injury to the rider, other road users and pedestrians and may also cause damage to the motorcycle.

Warning

With the key in the LOCK or P position the steering will become locked.

Never turn the key to the LOCK or P positions while the motorcycle is moving as this will cause the steering to lock. Locked steering will cause loss of motorcycle control and an accident.

Right Handlebar Switches

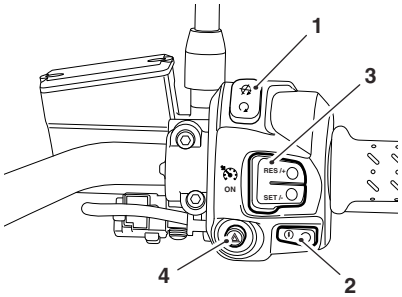

1. **Engine stop switch**
2. **Starter button**
3. **Cruise control adjust button (if fitted)**
4. **Hazard warning lights button**

Engine Stop Switch

In addition to the ignition switch being turned to the ON position, the engine stop switch must be in the RUN position for the motorcycle to operate.

The engine stop switch is for emergency use. If an emergency arises which requires the engine to be stopped, move the engine stop switch to the STOP position.

Note:

- **Although the engine stop switch stops the engine, it does not turn off all the electrical circuits and may cause difficulty in restarting the engine due to a discharged battery. Ordinarily, only the ignition switch should be used to stop the engine.**

Caution

Do not leave the ignition switch in the ON position unless the engine is running as this may cause damage to electrical components and will discharge the battery.

Starter Button

The starter button operates the electric starter. For the starter to operate, the clutch lever must be pulled to the handlebar.

Note:

- **Even if the clutch lever is pulled to the handlebar, the starter will not operate if the side stand is down and a gear is engaged.**

Cruise Control Adjust Button (if fitted)

The cruise control adjust button is a two way switch with the top marked RES/+ and the bottom marked SET/- (see page 76).

Hazard Warning Lights

To turn the hazard warning lights on or off, press and release the hazard warning light button.

The ignition must be switched on for the hazard warnings lights to be activated, but the hazard lights will remain active if the ignition is switched off until the hazard warning light button is pressed again.

Left Handlebar Switches

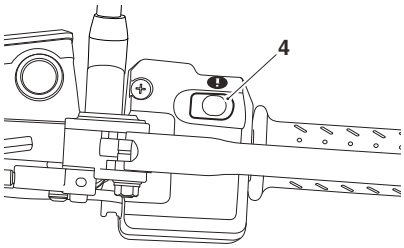

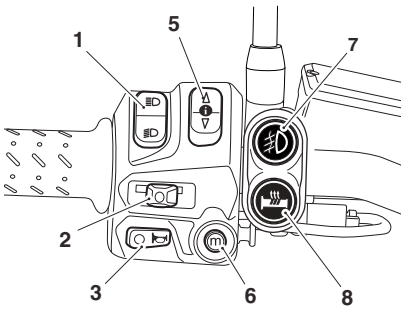

1. **Headlight dip switch**
2. **Direction indicator switch**
3. **Horn button**
4. **Instruments SELECT button**
5. **Instruments SCROLL button**
6. **MODE button**
7. **Front fog lights switch (if fitted)**
8. **Heated grips switch (if fitted)**

Headlight Dip Switch

High or dip beam can be selected with the headlight dip switch. To select high beam, push the switch forward. To select dip beam, push the switch rearwards. When the high beam is turned on, the high beam indicator light will illuminate in the tachometer.

Pass Function

With the headlight dip switch set to the dip beam position, pressing the bottom of the switch will activate the pass function.

When pressed, the headlight high beam will be switched on. It will remain on as long as the switch is held in and will turn off as soon as the switch is released.

Note:

- **A lighting on/off switch is not fitted to this model. The position light, rear light and licence plate light all function automatically when the ignition is turned to the ON position.**
- **The headlight will function when the ignition switch is turned to the ON position and the engine is running.**

There are two alternate ways to turn on the headlight without the engine running:

- Pull in the clutch lever then turn the ignition to the ON position. The headlight will be on and will remain on when the clutch lever is released.
- With the ignition on and the headlight dip switch set to the dip beam position, pressing the bottom of the switch will activate the headlight. The headlight will remain on when the switch is released.

The headlight will go off while pressing the starter button until the engine starts.

Direction Indicator Switch

When the indicator switch is pushed to the left or right and released, the corresponding direction indicators will flash on and off. To turn off the indicators, push and release the switch in the central position.

Models Equipped with Automatic Self-Cancelling Indicators

A short press and release of the indicator switch to the left or right will cause the corresponding direction indicators to flash on and off three times, then go off.

A longer press and release of the indicator switch to the left or right will cause the corresponding direction indicators to flash on and off until they are cancelled as follows:

The indicator self-cancel system becomes active eight seconds after operating a direction indicator. Eight seconds after turning the direction indicator on and after riding a further 65 metres, the indicator self-cancel system will automatically turn off the indicators.

To disable the indicator self-cancel system refer to the Bike Setup section on page 50.

The indicators can be cancelled manually. To manually turn off the indicators, press and release the indicator switch in the central position.

Horn Button

When the horn button is pushed, with the ignition switch turned to the ON position, the horn will sound.

Instrument SELECT Button

When the SELECT button is pressed and released it will select the menu highlighted in the multifunction display screen.

Pressing and holding the SELECT button when the motorcycle is stationary will activate the Settings Menu in the multifunction display (see Settings Menu on page 48).

Instrument SCROLL Button

When the SCROLL button is pressed and released it will scroll through the menu visible in the instrument's display screen.

MODE Button

When the MODE button is pressed and released it will activate the Riding Mode Selection Menu in the multifunction display screen. Further presses of the mode button will scroll through the available riding modes (see Riding Mode Selection on page 58).

Pressing and holding the MODE button will provide direct access to a Riding Mode's Configuration Menu (see Riding Mode Configuration on page 62).

Fog Lights Switch (if fitted)

Note:

- **The fog lights switch will only operate when the headlights are on.**
- **The fog lights switch will reset to off when the ignition is turned off then on again.**

To turn the fog lights on or off, with the headlights on, press and release the fog lights switch. When the fog lights are turned on, the fog lights indicator will illuminate in the tachometer.

Heated Grips Switch (if fitted)

The heated grips will only heat when the engine is running.

The system is designed to offer a variable level of heat at the grips from warm to hot.

When the heated grips are switched on, the heated grips symbol will appear in the multifunction display and the selected heat level will be shown.

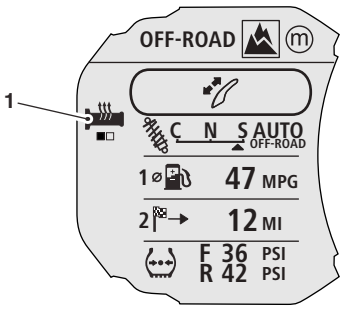

1. **Heated grips symbol (warm selected)**

For maximum benefit in cold conditions, from the OFF position press the switch once for hot initially and then reduce the heat level by pressing the switch again for warm when the grips have warmed up.

To turn off the heated grips, press and release the switch until the off status is indicated.

After a short delay, the heated grips symbol will disappear from the multifunction display.

Low Power Voltage Cut Off

If a low voltage is detected, the heated grips switch will power off. The heated grips will not function again until the voltage rises to a safe level.

The switch will not power back on automatically even if the voltage rises to the safe level. The user must manually press the switch again to activate the heated grips.

Throttle Control

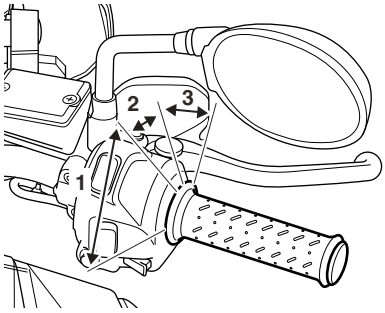

1. **Throttle open position**
2. **Throttle closed position**
3. **Cruise control cancel position**

This Triumph model has an electronic throttle twist grip to open and close the throttle via the engine control unit. There are no direct-acting cables in the system.

The throttle grip has a resistive feel to it as it is rolled rearwards to open the throttle. When the grip is released it will return to the throttle closed position by its internal return spring and the throttle will close.

From the closed position, the throttle twist grip can be rolled forward 3 - 4 mm to deactivate the cruise control (see page 79).

There are no user adjustments for the throttle control.

If there is a malfunction with the throttle control the malfunction indicator light (MIL) becomes illuminated and one of the following engine conditions may occur:

- MIL illuminated, restricted engine RPM and throttle movement
- MIL illuminated, limp-home mode with the engine at a fast idle condition only
- MIL illuminated, engine will not start.

For all of the above conditions contact an authorised Triumph dealer as soon as possible to have the fault checked and rectified.

Brake Use

At low throttle opening (approximately 20°), the brakes and throttle can be used together.

At high throttle opening (greater than 20°), if the brakes are applied for more than two seconds the throttles will close and the engine speed will reduce. To return to normal throttle operation, release the throttle control, release the brakes and then re-open the throttle.

Warning

Reduce speed and do not continue to ride for longer than is necessary with the malfunction indicator light illuminated. The fault may adversely affect engine performance, exhaust emissions and fuel consumption. Reduced engine performance could cause a dangerous riding condition, leading to loss of motorcycle control and an accident. Contact an authorised Triumph dealer as soon as possible to have the fault checked and rectified.

Brake and Clutch Lever Adjusters

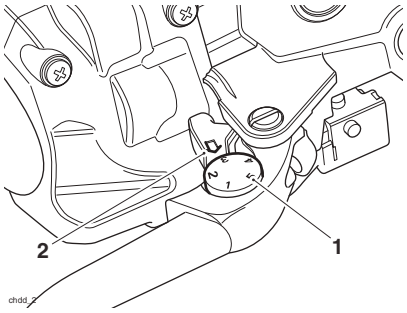

1. **Adjuster wheel, brake lever shown**
2. **Arrow mark**

An adjuster is fitted to both the front brake and clutch levers. The adjusters allow the distance from the handlebar to the lever to be changed to one of five positions for the front brake lever or four positions for the clutch lever, to suit the span of the operator's hands.

To adjust the lever, push the lever forward and turn the adjuster wheel to align one of the numbered positions with the arrow mark on the lever holder.

The distance from the handlebar grip to the released lever is shortest when set to number five, and longest when set to number one.

Warning

Do not attempt to adjust the lever with the motorcycle in motion as this may lead to loss of motorcycle control and an accident.

After adjusting the lever, operate the motorcycle in an area free from traffic to gain familiarity with the new lever setting. Do not loan your motorcycle to anyone as they may change the lever setting from the one you are familiar with causing loss of motorcycle control and an accident.

Cruise Control (if fitted)

Warning

Cruise control must only be used where you can drive safely at a steady speed.

Cruise control should not be used when riding in heavy traffic, on roads with sharp/blind bends or when they are slippery.

Using cruise control in heavy traffic, on roads with sharp/blind bends or when they are slippery, may result in loss of motorcycle control and an accident.

Warning

This Triumph motorcycle should be operated within the legal speed limits for the particular road travelled. Operating a motorcycle at high speeds can be potentially dangerous since the time available to react to given traffic situations is greatly reduced as speed increases. Always reduce speed in consideration of weather and traffic conditions.

Warning

Only operate this Triumph motorcycle at high speed in closed-course, on-road competition or on closed-course racetracks. High-speed operation should only then be attempted by riders who have been instructed in the techniques necessary for high-speed riding and are familiar with the motorcycle's behaviour in all conditions.

High-speed operation in any other circumstances is dangerous and will lead to loss of motorcycle control and an accident.

Note:

- **Cruise control may not function if there is a malfunction with the ABS system and the ABS warning light is illuminated.**
- **Cruise control will continue to function if a riding mode is selected with ABS set to Off-Road or Off.**
- **Cruise control will continue to function if ABS has been disabled as described on page 51.**

The cruise control buttons are located on the right hand switch housing and can be operated with minimum movement by the rider.

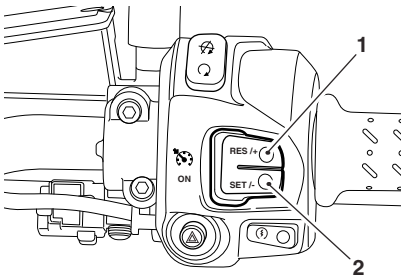

1. **Cruise control SET/- button**
2. **Cruise control RES/+ button**

Cruise control can be switched on or off at any time but it can not be activated until all the conditions described on page 77 have been met.

Activating Cruise Control

To turn on the cruise control system, press the SET/- button. The cruise control symbol will be visible in the motorcycle status display screen. The cruise control set speed will be displayed as -- indicating that a speed has not yet been set.

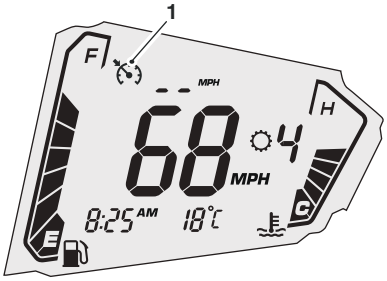

1. **Cruise control symbol**

Note:

- **To activate cruise control, the following conditions have to be met:**
- **The motorcycle must be travelling at a speed between 19 to 100 mph (30 to 160 km/h).**
- **The motorcycle must be in 3rd gear or higher.**

Once these conditions have been met, press the SET/- button to activate cruise control.

The word SET will be visible below the cruise control symbol, the cruise control set speed will be displayed and the cruise control light will illuminate in the tachometer indicating that cruise control is active.

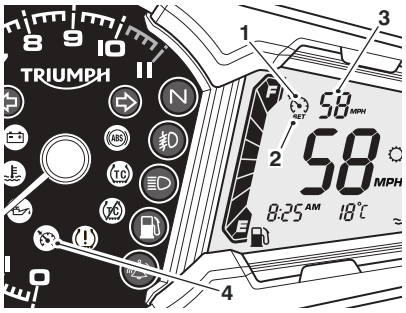

1. **Cruise control symbol**
2. **Cruise control set indicator**
3. **Cruise control set speed**
4. **Cruise control light**

The cruise control system will maintain the set speed until:

- The set speed is adjusted as described on page 78
- Cruise control is deactivated as described on page 79.

Adjusting the Set Speed While in Cruise Control

To adjust the set speed while in cruise control, press and release the:

- RES/+ button to increase the speed
- SET/- button to decrease the speed.

Each press of the buttons will adjust the speed by 1 mph or 1 km/h. If the buttons are held, the speed continuously increases or decreases in single digit increments.

Stop pressing the adjust button when the desired speed is shown in the display.

Note:

- **The cruise control set speed display will flash until the new set speed has been achieved.**
- **If riding up a steep incline and cruise control is unable to maintain the set speed, the cruise control set speed display will flash until the motorcycle has regained the set speed.**

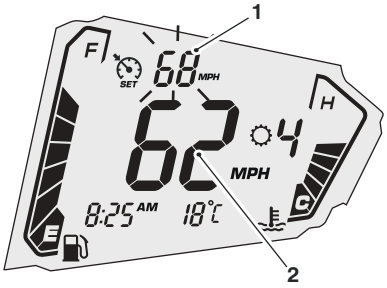

1. **Cruise control set speed (flashing)**
2. **Current road speed**

An alternative way to increase the speed in cruise control is to accelerate to the desired speed using the throttle grip and then press the SET/- button.

Deactivating Cruise Control

The cruise control can be deactivated by one of the following methods:

- Roll the throttle twist grip fully forward
- Pull the clutch lever
- Operate the front or rear brake
- Increase speed by using the throttle for more than 60 seconds.

Upon deactivation, the cruise control lamp will go out in the tachometer but the SET indicator and set speed will still be visible in the motorcycle status display screen, indicating that the cruise control set speed has been stored.

The cruise control set speed can be resumed as described on page 79, provided the cruise control has not been deactivated by turning the ignition switch to the OFF position.

Resuming the Cruise Control Set Speed

Warning

When resuming cruise control, always ensure that the traffic conditions are suitable for the set speed.

Using cruise control in heavy traffic, on roads with sharp/blind bends or when they are slippery, may result in loss of motorcycle control and an accident.

Cruise control will be deactivated if one of the following actions has been taken:

- Roll the throttle twist grip fully forward
- Pull the clutch lever
- Operate the front or rear brake
- Increase speed by using the throttle grip for more than 60 seconds.

The cruise control set speed can be resumed by pressing and releasing the RES/+ button provided a set speed has been stored.

The motorcycle must be travelling at a speed between 19 to 100 mph (30 to 160 km/h) and be in 3rd gear or higher.

A stored set speed is indicated by the word SET, below the cruise control symbol in the motorcycle status display screen.

The stored set speed will remain in the cruise control memory until the ignition switch has been turned to the OFF position.

Note:

- **The cruise control set speed display will flash until the resumed set speed has been achieved.**

Triumph Semi Active Suspension (TSAS) (if fitted)

Warning

After adjusting the suspension, operate the motorcycle in an area free from traffic to gain familiarity with the new settings. Do not loan your motorcycle to anyone as they may change the suspension settings from the one you are familiar with causing loss of motorcycle control and an accident.

The Triumph Semi-Active Suspension System (TSAS) controls adjustment of the front and rear suspension damping and automatic rear suspension pre-load settings.

TSAS allows a convenient remote adjustment of the TSAS mode and damping settings through the instruments, while the motorcycle is stationary or moving.

TSAS adjustments are made instantaneously once a new mode or damping setting has been selected and the engine is running.

TSAS Modes

There are three TSAS modes available for selection:

- Auto - The TSAS system will automatically detect the type of surface being ridden on (road or off-road) and will adjust rebound and compression damping settings accordingly.
- Off-Road - Optimal TSAS settings for off-road use.

TSAS Damping Settings

There are a total of nine damping settings available for selection ranging from COMFORT (soft) to SPORT (firm) with the three main settings being:

- COMFORT
- NORMAL
- SPORT.

To access the TSAS settings, see:

- TSAS Settings on page 44
- Bike Setup on page 50
- Riding Mode Configuration on page 62.

System Calibration

The TSAS system will recalibrate adjustment motors under the following conditions:

- If the battery has been disconnected for any reason.
- If a fault occurs with the TSAS system during normal operation.

The warning light will flash twice every second during system recalibration.

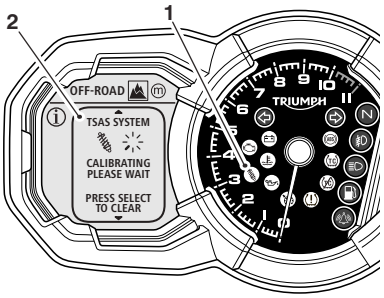

1. **TSAS warning light**
2. **Instrument message**

To allow the system to calibrate correctly, the following procedure must be adhered to:

- Turn the ignition on. Do not start the engine.
- Wait for the warning light to stop flashing indicating that adjustment motor calibration is complete.
- Start the engine. If the warning light resumes flashing. the adjustment motors are being recalibrated due to low battery voltage.
- Wait for the warning light to stop flashing before riding the motorcycle.

Failure to follow this procedure will cause the recalibration to be halted and the warning light to remain lit.

In this case the warning light will extinguish once the recalibration is next allowed to complete.

Traction Control (TC)

Warning

The traction control and optimised cornering traction control systems are not a substitute for riding appropriately for the prevailing surface and weather conditions. The systems cannot prevent loss of traction due to:

- excessive speed when entering turns
- accelerating at a sharp lean angle
- braking.

Traction control or optimised cornering traction control cannot prevent the front wheel from slipping.

Failure to observe any of the above may result in loss of motorcycle control and an accident.

All Explorer motorcycles are equipped with Traction Control (TC).

TC is a system that helps to maintain traction when accelerating on wet/slippery road surfaces. If sensors detect that the rear wheel is losing traction (slipping), the TC system will engage and alter the engine power until traction to the rear wheel has been restored.

The TC indicator light will flash while it is engaged and the rider may notice a change to the sound of the engine.

See page 30 for full details of the TC indicator light operation.

Optimised Cornering TC

The following Explorer models are equipped with optimised cornering TC:

- Explorer XRx
- Explorer XRx-LRH
- Explorer XRT
- Explorer XCx
- Explorer XCx-LRH
- Explorer XCA

Optimised cornering traction control is a system designed to give the rider increased control should the traction control be activated whilst the motorcycle is leaning in a corner.

The system constantly monitors the lean angle of the motorcycle and adapts the level of traction control intervention in a manor most suitable to maintain rear wheel traction during cornering.

Note:

- **TC and optimised TC control (if equipped) may not function if there is a malfunction with the ABS system. In this situation, the warning lights for the ABS, TC and the MIL may be illuminated.**

Warning

If the TC system is not functioning, care must be taken when accelerating and cornering on wet/slippery road surfaces to avoid rear wheel spin.

In the event of a fault, the TC disabled warning light may be accompanied by the engine management system malfunction indicator light and/or the ABS warning light.

Do not continue to ride for longer than is necessary with any of the above warning lights illuminated. Contact an authorised Triumph dealer as soon as possible to have the fault checked and rectified.

Hard acceleration and cornering in this situation may cause the rear wheel to spin resulting in loss of motorcycle control and an accident.

Warning

If a fault occurs with the optimised cornering TC system, the TC disabled warning light will illuminate and the message TC SYSTEM - CORNERING TC DISABLED will be displayed in the multifunction display.

In this situation, the TC system will continue to operate but without the optimised cornering function, provided that:

- There are no other faults with the TC system.
- TC has NOT been disabled by the rider (see Bike Setup on page 50 or Riding Mode Configuration on page 62).

Care must be taken when accelerating and cornering on wet/slippery road surfaces to avoid rear wheel spin.

In the event of a fault, the TC disabled warning light may be accompanied by the engine management system malfunction indicator light and/or the ABS warning light.

Do not continue to ride for longer than is necessary with any of the above warning lights illuminated. Contact an authorised Triumph dealer as soon as possible to have the fault checked and rectified.

Hard acceleration and cornering in this situation may cause the rear wheel to spin resulting in loss of motorcycle control and an accident.

See page 28 for full details of the TC disabled warning light operation and its associated instrument warning messages.

Traction Control Settings

Warning

If the traction control is disabled, the motorcycle will handle as normal but without traction control. In this situation accelerating too hard on wet/slippery road surfaces may cause the rear wheel to slip, and may result in loss of motorcycle control and an accident.

The TC system can be disabled as described in Bike Setup on page 50, or set to the conditions described in Riding Mode Configuration on page 62.

Tyre Pressure Monitoring System (TPMS) (if fitted)

Warning

The daily check of tyre pressures must not be excluded because of the fitment of the TPMS. Check the tyre pressure when the tyres are cold and using an accurate tyre pressure gauge (see page 156).

Use of the TPMS system to set inflation pressures may lead to incorrect tyre pressures leading to loss of motorcycle control and an accident.

Function

Tyre pressure sensors are fitted to the front and rear wheels. These sensors measure the air pressure inside the tyre and transmit pressure data to the instruments. The sensors will not transmit data until the motorcycle reaches a speed of approximately 12 mph (20 km/h). Two dashes will be visible in the system display until the tyre pressure signal is received.

After bring the motorcycle to a stop, the sensors continue to transmit data for approximately seven minutes before switching off. The tyre pressure values remain visible in the system display until the sensors switch off.

An adhesive label will be fitted to the wheel rim to indicate the position of the tyre pressure sensor, which is near the valve.

All Models except Explorer XRT and Explorer XCA: The tyre pressure monitoring system (TPMS) is available as an accessory kit and must be fitted by your authorised Triumph dealer. The TPMS display on the instruments will only be activated when the system has been fitted.

TPMS Sensor ID Number

An ID number for each tyre pressure sensor is printed on a label which is on the sensor. This number may be required by the dealer for service or diagnostics.

If the TPMS has been fitted at the factory, labels identifying the front and rear TPMS sensor ID numbers will be affixed to the spaces below.

If the TPMS is being fitted to the motorcycle as an accessory, ensure that the dealer records the front and rear TPMS sensor ID numbers in the spaces provided below.

Front Sensor	Rear Sensor

System Display

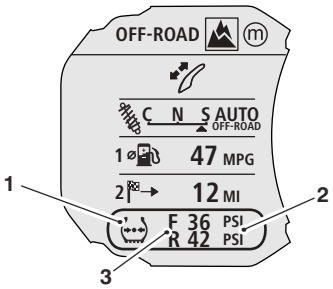

1. **TPMS symbol**
2. **Tyre pressure display**
3. **Front and rear tyre, identified**

To access the tyre pressure display, see Motorcycle Information on page 47.

The motorcycle information display will automatically switch to the tyre pressure display when a low tyre pressure is detected. See page 32.

Dashes will be displayed in the tyre pressure display until the motorcycle reaches a speed of approximately 12 mph (20 km/h).

Sensor Batteries

When the battery voltage in a pressure sensor is low, TPMS - BATTERY LOW FRONT/REAR TYRE CHECK MANUAL will be displayed in the multifunction display.

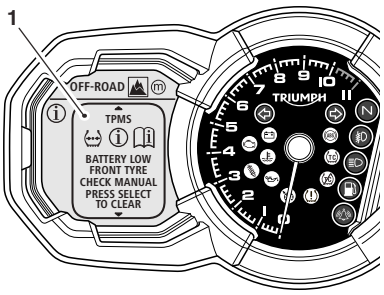

1. **Instrument message**

If the batteries are completely flat, only dashes will be visible in the TPMS display, the red TPMS warning light will be on and the message TPMS - SENSOR SIGNAL FRONT/REAR TYRE CHECK MANUAL will be displayed. Contact your authorised Triumph dealer to have the sensor replaced and the new serial number recorded in the spaces provided on page 85.

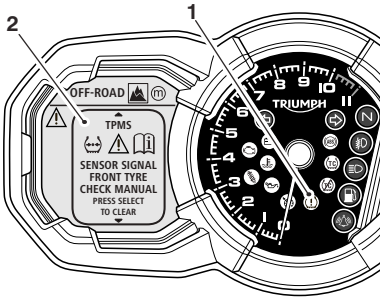

1. **TPMS warning light**
2. **Instrument message**

TPMS System Fault

If a fault occurs with the TPMS system, the red TPMS warning light will be illuminated and the message TPMS - SENSOR SIGNAL FRONT/REAR TYRE CHECK MANUAL will be displayed. Contact your authorised Triumph dealer to have the fault rectified.

Tyre Pressures

The tyre pressures shown on your instrument panel indicate the actual tyre pressure at the time of selecting the display. This may differ from the inflation pressure set when the tyres are cold because tyres become warmer during riding, causing the air in the tyre to expand and the inflation pressure to increase. The cold inflation pressures specified by Triumph take account of this.

Owners must only adjust tyre pressures when the tyres are cold using an accurate tyre pressure gauge (see page 156), and must not use the tyre pressure display on the instruments.

Warning

The tyre pressure monitoring system is not to be used as a tyre pressure gauge when adjusting the tyre pressures. For correct tyre pressures, always check the tyre pressures when the tyres are cold and using an accurate tyre pressure gauge (see page 156).

Use of the TPMS system to set inflation pressures may lead to incorrect tyre pressures leading to loss of motorcycle control and an accident.

Low Tyre Pressure

If a low tyre pressure is detected, the tyre pressure warning light will illuminate and the message TPMS - FRONT/REAR TYRE LOW PRESSURE will be displayed (see page 32).

Warning

Stop the motorcycle if the tyre pressure warning light illuminates and the message TPMS - FRONT/REAR TYRE LOW PRESSURE is displayed. Do not ride the motorcycle until the tyres have been checked and the tyre pressures are at their recommended pressure when cold.

Replacement Tyres

When replacing tyres, always have an authorised Triumph dealer fit your tyres and ensure they are aware that tyre pressure sensors are fitted to the wheels (see page 158).

Fuel Requirement/Refuelling

Fuel Grade

Your Triumph engine is designed to use unleaded fuel and will give optimum performance if the correct grade of fuel is used. Always use unleaded fuel with an octane rating of 91 RON or higher.

Caution

The exhaust system is fitted with a catalytic converter to help reduce exhaust emission levels. The catalytic converter can be permanently damaged if the motorcycle is allowed to run out of fuel or if the fuel level is allowed to get very low. Always ensure you have adequate fuel for your journey.

Caution

The use of leaded fuel is illegal in most countries, states or territories. Use of leaded fuel will damage the catalytic converter.

Warning

To help reduce hazards associated with refuelling, always observe the following fuel safety instructions:

Petrol (fuel) is highly flammable and can be explosive under certain conditions. When refuelling, turn the ignition switch to the OFF position.

Do not smoke.

Do not use a mobile telephone.

Make sure the refuelling area is well ventilated and free from any source of flame or sparks. This includes any appliance with a pilot light.

Never fill the tank until the fuel level rises into the filler neck. Heat from sunlight or other sources may cause the fuel to expand and overflow creating a fire hazard.

After refuelling always check that the fuel filler cap is correctly closed and locked.

Because petrol (fuel) is highly flammable, any fuel leak or spillage, or any failure to observe the safety advice given above, will lead to a fire hazard which could cause damage to property, injury to persons or death.

Fuel Tank Cap

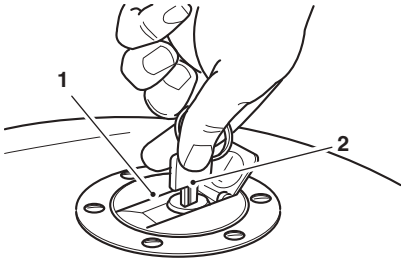

cbmm_2

1. **Fuel tank cap**
2. **Key**

To open the fuel tank cap, lift up the flap covering the lock itself. Insert the key into the lock and turn the key clockwise.

To close and lock the cap, push the cap down into place with the key inserted, until the lock clicks into place. Withdraw the key and close the key cover.

Caution

Closing the cap without the key inserted will damage the cap, tank and lock mechanism.

Filling the Fuel Tank

Avoid filling the tank in rainy or dusty conditions where airborne material can contaminate the fuel.

Caution

Contaminated fuel may cause damage to fuel system components.

Fill the fuel tank slowly to help prevent spillage. Do not fill the tank to a level above the bottom of the filler neck. This will ensure there is enough air space to allow for fuel expansion if the fuel inside the tank expands through absorption of heat from the engine or from direct sunlight.

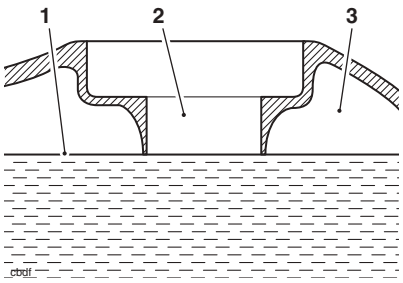

1. **Maximum fuel level**
2. **Fuel filler neck**
3. **Air space**

Warning

Overfilling the tank can lead to fuel spillage.

If fuel is spilled, thoroughly clean up the spillage immediately and dispose of the materials used safely.

Take care not to spill any fuel on the engine, exhaust pipes, tyres or any other part of the motorcycle.

Because fuel is highly flammable, any fuel leak or spillage, or any failure to observe the safety advice given above may lead to a fire hazard, which could cause damage to property and injury or death to persons.

Fuel spilled near to, or onto the tyres will reduce the tyre's ability to grip the road. This will result in a dangerous riding condition potentially causing loss of motorcycle control and an accident.

After refuelling always check that the fuel filler cap is correctly closed and locked.

Windscreen

Warning

Never attempt to clean the windscreen while riding the motorcycle. Removal of the rider's hands from the handlebars while riding the motorcycle will diminish the ability of the rider to maintain the control of the motorcycle. Attempting to clean the windscreen while riding the motorcycle may result in loss of motorcycle control and an accident.

See page 174 for windscreen cleaning information

To Adjust the Windscreen

Warning

Never place loose items of clothing, fingers, hands or any other part of the body near the windscreen during adjustment.

Personal injury may result from trapping parts of the body or loose items of clothing between the windscreen and the motorcycle bodywork.

To adjust the windscreen, the ignition must be on. Adjustment is possible with the motorcycle stationary or in motion.

The windscreen is adjusted electrically, by selecting the windscreen adjustment mode.

To access the windscreen adjustment mode, from the home screen, press the SCROLL button until the windscreen adjust display is highlighted.

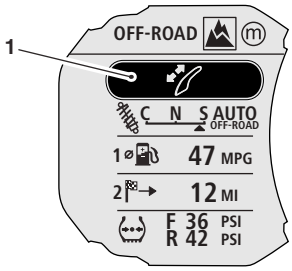

1. **Windscreen adjustment mode**

Press the SELECT button to activate the windscreen adjustment mode.

Use the SCROLL button to adjust the windscreen to the desired height.

There is a short time-out period to allow for further adjustment to take place before the instruments automatically exit the windscreen adjustment mode.

Alternatively, press the SELECT button to exit the windscreen adjustment mode.

Handlebar Adjustment

The handlebars are adjustable for reach by approximately 20 mm.

Warning

It is recommended to have handlebar adjustments carried out by a trained technician of an authorised Triumph dealer. Handlebar adjustments carried out by a technician who is not of an authorised Triumph dealer may affect the handling, stability or other aspects of the motorcycle's operation which may result in loss of motorcycle control and an accident.

Warning

Before starting work, ensure the motorcycle is stabilised and adequately supported. This will help prevent injury to the operator or damage to the motorcycle.

Note:

- **This procedure assumes the handlebars are in the standard position, as delivered from the factory. If the handlebars have already been adjusted as described below, the bolt positions will be reversed.**

To adjust the handlebars, loosen and remove the handlebar rear (8 mm threaded) clamp bolts, and then the front (10 mm threaded) clamp and riser bolts.

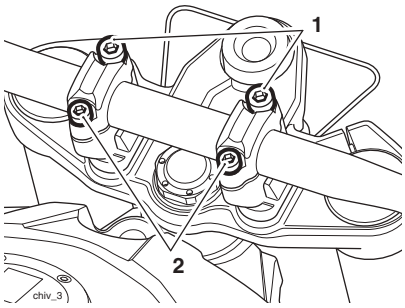

1. **10 mm bolts**
2. **8 mm bolts**

Lift the handlebars out of the handlebar risers and support with the aid of an assistant.

Rotate both risers through 180° and align the bolt holes.

Reposition the handlebars to the risers.

Refit the upper clamps, and secure with the two 10 mm threaded bolts in the rear bolt positions. Do not fully tighten the bolts at this stage.

Rotate the handlebar so that the alignment marking on the handlebar aligns with the front left hand split line of the clamp riser.

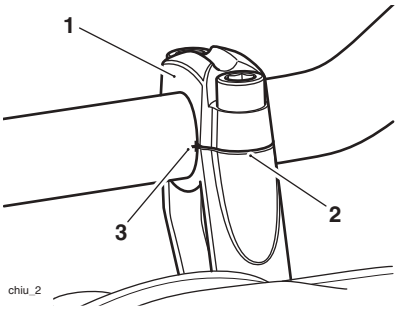

1. **Upper clamp, left hand**
2. **Clamp split line, front**
3. **Handlebar alignment mark**

Tighten the 10 mm bolts to **35 Nm**.

Refit the 8 mm bolts to the front positions and tighten to **26 Nm**.

Stands

Side Stand

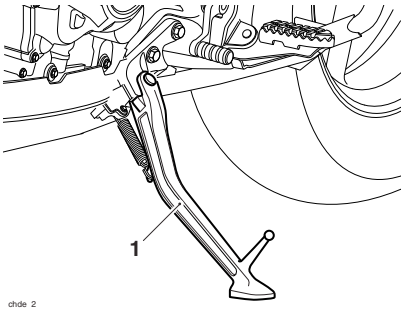

1. **Side stand**

The motorcycle is equipped with a side stand on which the motorcycle can be parked.

Warning

The motorcycle is fitted with an interlock system to prevent it from being ridden with the side stand in the down position.

Never attempt to ride with the side stand down or interfere with the interlock mechanism as this will cause a dangerous riding condition leading to loss of motorcycle control and an accident.

Note:

- **When using the side stand, always turn the handlebars fully to the left and leave the motorcycle in first gear.**

Whenever the side stand is used, before riding, always ensure that the side stand is fully up after first sitting on the motorcycle.

For instructions on safe parking, refer to the How to Ride the Motorcycle section.

Centre Stand (if fitted)

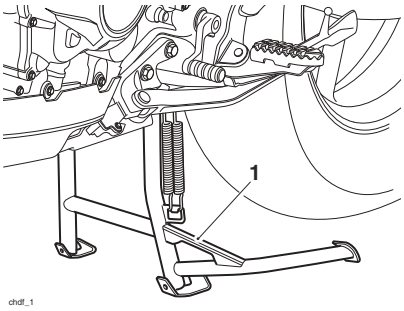

1. **Centre stand**

To set the motorcycle on the centre stand, step down firmly on the foot finder part of the stand, then lift the motorcycle up and to the rear using the rear rack as a handhold.

For instructions on safe parking, refer to the How to Ride the Motorcycle section.

Caution

Do not use body panels or the seat as a hand-hold when placing the motorcycle on the centre stand as this will cause damage.

Seats

Seat Care

To prevent damage to the seat or seat cover, care must be taken not to drop or lean the seat against any surface which may damage the seat or seat cover.

See page 174 for seat cleaning information.

Caution

To prevent damage to the seat or seat cover, care must be taken not to drop the seat. Do not lean the seat against the motorcycle or any surface which may damage the seat or seat cover. Instead, place the seat, with the seat cover facing upwards, on a clean, flat surface which is covered with a soft cloth.

Do not place any item on the seat which may cause damage or staining to the seat cover.

Passenger Seat

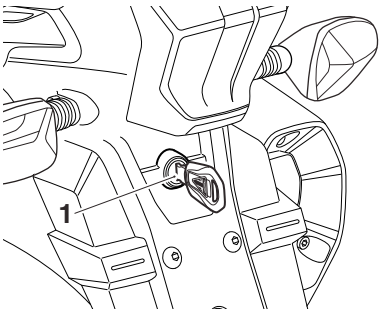

1. Seat lock

The seat lock is located on the rear mudguard, below the rear light unit. To remove the seat, insert the ignition key into the seat lock and turn it anti-clockwise while pressing down on the rear of the seat. This will release the seat from its lock and allow it to be slid rearwards. If equipped with heated seats, disconnect the heated seat's electrical connector for complete removal from the motorcycle.

To refit the seat, reconnect the heated seat's electrical connector (if equipped), engage the seat's two outer brackets under the loops on the subframe and the two inner brackets to brackets on the rider's seat. Gently push the seat forwards and press down at the rear to engage in the seat lock.

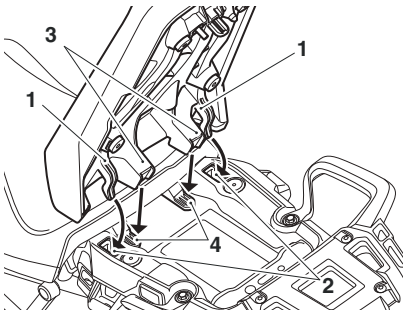

1. **Passenger seat outer brackets**
2. **Subframe loops**
3. **Passenger seat inner brackets**
4. **Rider seat brackets**

Warning

To prevent detachment of the seat during riding, after fitting always grasp the seat and pull firmly upwards. If the seat is not correctly secured, it will detach from the lock. A loose or detached seat could cause loss of motorcycle control and an accident.

Rider's Seat

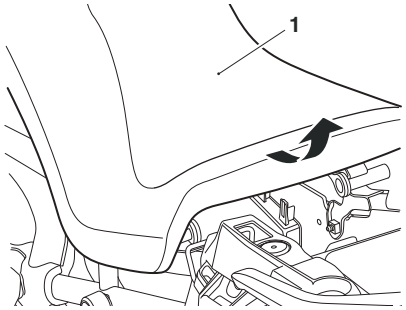

1. Rider's seat

To remove the rider's seat, remove the passenger seat (see page 94).

Grasp the rider's seat on either side, and slide it rearwards and upwards. If equipped with heated seats, disconnect the heated seat's electrical connector for complete removal from the motorcycle.

To refit the seat, reconnect the heated seat's electrical connector (if equipped). Engage the seat's front rail into the bracket at the rear of the fuel tank and lower the rear rail into the rear brackets. Push down firmly on the rear of the seat. Refit the passenger seat (see page 94).

Warning

The rider's seat is only correctly retained and supported once the passenger seat is correctly fitted. Never ride the motorcycle with the passenger seat detached or removed, as the front seat will not be secured and may move.

A loose or detached seat could cause loss of motorcycle control and an accident.

Rider's Seat Height Adjustment

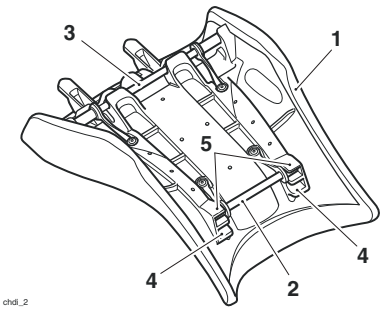

1. **Rider's seat**
2. **Front height adjuster**
3. **Rear height adjuster**
4. **Low seat height position (front shown)**
5. **High seat height position (front shown)**

The rider's seat is adjustable for height by approximately 20 mm.

To adjust the rider's seat:

Remove the rider's seat (see page 95).

Reposition both seat height adjusters to the higher or lower position as required. Ensure both adjuster rails are fully engaged in their brackets on the seat.

Refit the rider's seat (see page 95).

Warning

Always adjust both seat height adjusters. Adjusting only one height adjuster may prevent correct fitment of the seat.

Riding the motorcycle with an incorrectly fitted seat may cause loss of motorcycle control and an accident.

Warning

After adjusting the seat, operate the motorcycle in an area free from traffic to gain familiarity with the new seat position. Riding the motorcycle with the seat in an unfamiliar position may cause loss of motorcycle control and an accident.

Heated Seats (if fitted)

The heated seats switches (if fitted) are located on the left hand side of the motorcycle.

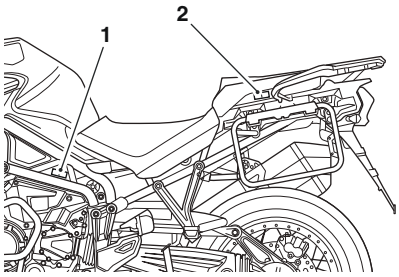

1. **Rider's heated seat switch location**
2. **Passenger's heated seat switch location**

The heated seats will only heat when the engine is running.

The system is designed to offer a variable level of heat at the seats from warm to hot.

When the heated seats are switched on, the heated seats symbol will appear in the multifunction display and the selected heat level for each seat will be shown.

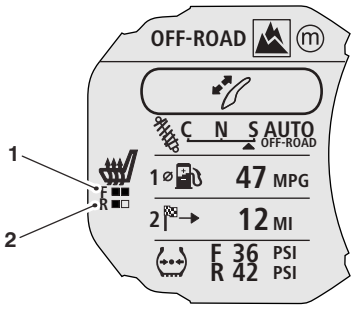

1. **Rider's heated seat (hot selected)**
2. **Passenger's heated seat (warm selected)**

For maximum benefit in cold conditions, switch the heated seats to the hot setting initially and then reduce the heat level by switching to the warm setting when the seat has warmed up.

To turn either of the heated seats off, move the switch to its central position. After a short delay, the heated seats symbol will disappear from the multifunction display.

Low Power Voltage Cut Off

If a low voltage is detected the heated seats switches will power off. The heated seats will not function again until the voltage rises to a safe level.

The switch will not power back on automatically even if the voltage rises to the safe level. The ignition must be switched off then on again to activate the heated seats.

Helmet Hook

A helmet can be secured to the motorcycle using the helmet hook located on the left hand side of the motorcycle, beneath the rider's seat.

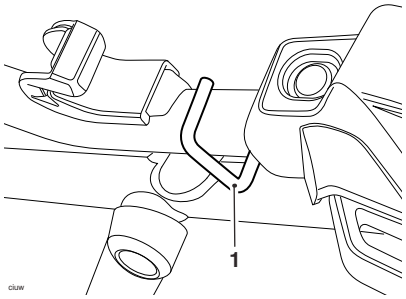

1. **Helmet hook**

To attach a helmet to the motorcycle, remove the rider's seat (see page 95) and loop the helmet chin strap over the hook.

To secure the helmet, refit the seat and lock into position (see page 95).

Warning

Never ride the motorcycle with helmet(s) secured to the helmet hook. Riding the motorcycle with helmet(s) secured to the helmet hook may cause the motorcycle to become unstable leading to loss of motorcycle control and an accident.

Tool Kit, Handbook and the Triumph Accessory D-Lock

The tool kit and handbook are located beneath the passenger seat.

Space is provided under the passenger seat to store a Triumph accessory D-lock (available from your Triumph dealer).

Secure the lock as follows:

Remove the passenger seat (see page 94).

Release the straps and remove the handbook and tool kit.

Position the U-section of the lock to the rear mudguard tray support features, ensuring the open end faces towards the front of the motorcycle.

Position the lock body into the rear mudguard tray as shown below.

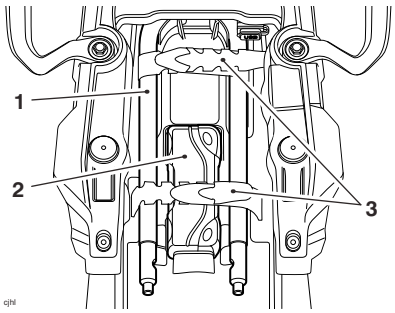

1. **Lock U-section**
2. **Lock body**
3. **Straps**

Fit the tool kit and handbook above the D-lock and secure using the tool kit straps.

Refit the passenger seat (see page 94).

Electrical Accessory Sockets

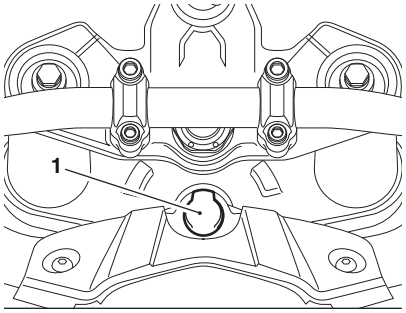

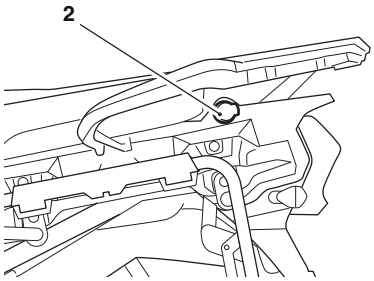

1. **Front electrical accessory socket**
2. **Rear electrical accessory socket (if fitted)**

All Models

An electrical accessory socket is provided on the motorcycle, located in front of the fuel tank.

The socket will provide a 12 Volt electrical supply and is permanently live.

Fuse number seven protects the front electrical accessory socket circuit, refer to the label in the fuse box lid for fuse amperage.

Caution

Do not leave electrical accessories connected to the front electrical accessory socket when the engine is not running as this will discharge the battery.

All Models Except Explorer XR and Explorer XC

An additional electrical accessory socket is provided, located on the left side, towards the rear of the motorcycle.

The additional electrical accessory socket is available for Explorer XR and Explorer XC models as an accessory kit from your authorised Triumph dealer.

The socket will provide a 12 Volt electrical supply and is live when the engine is running.

The rear electrical accessory socket is protected by a chassis ECM, which will automatically cut power to the socket in the event of an overload.

Power can be restored to the rear electrical accessory socket by turning the ignition switch off then on again, provided that the socket is not still overloaded.

Note:

- **To protect the battery from excessive discharge while using fitted electrical accessories, the combined total current which may be drawn through the electrical accessory sockets is five Amps.**
- **A plug, suitable for use with the accessory socket, is available from your authorised Triumph dealer.**

Universal Serial Bus (USB) Socket

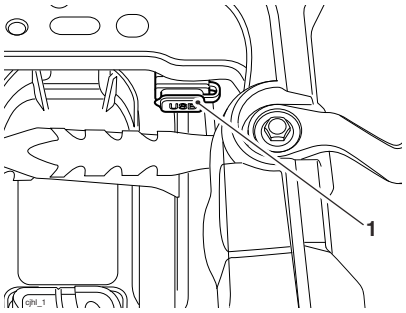

1. USB socket

A USB socket is provided, located under the passenger seat. The connector provides a 5 Volt, 2 Amp power supply which is suitable for charging electronic devices such as mobile phones, cameras and GPS devices.

To access the USB socket remove the passenger seat.

Remove the cap from the USB socket.

Connect your device using a suitable USB cable, then stow the device and USB cable in the space available under the passenger seat.

Warning

The USB socket is not waterproof unless the waterproof cap is installed. Do not connect electronic devices whilst it is raining.

Water in the USB socket could lead to an electrical problem, resulting in motorcycle damage, loss of motorcycle control and an accident.

Caution

Make sure that all electronic devices and cables are safely secured under the seat when riding.

Make sure there is sufficient space surrounding any electronic devices for the seat to close without causing any damage to the electronic device or the motorcycle.

Fit the passenger seat, ensuring that neither the device or USB cable is trapped.

Turn the ignition on and start the engine.

Caution

Do not leave the ignition switch in the ON position unless the engine is running as this will discharge the battery.

When your device has finished charging, Remove the passenger seat and disconnect the device.

Refit the USB socket cap and refit the passenger seat.

Note:

- **The USB socket is protected by a chassis ECM, which will automatically cut power to the socket in the event of an overload.**
- **Power can be restored to the USB socket by turning the ignition switch off then on again, provided that the socket is not still overloaded.**

Luggage Systems

MAX LOAD
5 kg (11 lbs)

Expedition Aluminium Panniers (if fitted)

Explorer XRT and Explorer XCA models are delivered from the factory pre-fitted with mounting rails for the Expedition Aluminium Panniers.

The mounting rails for the Expedition Aluminium Panniers, are also available as an accessory kit for all other Explorer models.

The Expedition Aluminium Panniers are available as an accessory option on all Explorer models.

For more details on the Expedition Aluminium Panniers and all other luggage solutions available, contact your authorised Triumph dealer or visit www.triumph.co.uk.

Note:

- **The same procedure can be followed to remove and mount the left hand or the right hand panniers.**
- **The pannier lock barrel has two positions as shown.**

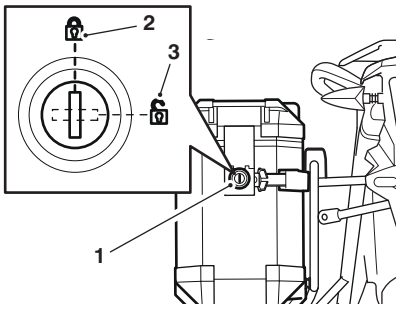

1. **Lock barrel**
2. **Lock position**
3. **Unlock position**

To Remove Each Pannier:

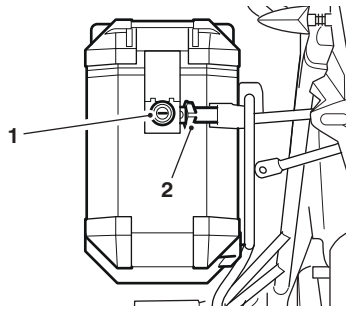

1. **Lock (left hand pannier shown)**
2. **Locking mechanism release lever**

To unlock and remove the pannier from the pannier mountings, turn the key to the UNLOCK position. Whilst supporting the pannier, pull the locking mechanism release lever to detach the pannier from the upper mounting points, then lift the pannier free from the lower mounting points.

To Install Each Pannier:

Insert the key into the lock. Turn the key to the UNLOCK position.

Note:

- **The left hand and right hand panniers must be mounted to the correct side of the motorcycle. When mounting the panniers, ensure that the lock barrels are facing towards the rear of the motorcycle.**

Position the pannier onto the lower pannier mounting points as shown below.

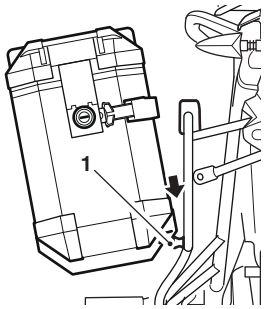

1. **Lower pannier mounting point**

Position the pannier's locking mechanism onto the upper mounting points and press the pannier inwards to engage the locking mechanism.

Note:

- **An audible click can be heard when the pannier's upper mounting locking mechanism is engaged.**
- **Two status indicators are also provided on the top of the upper mounting point. The status indicators will change colour from red to green when the locking mechanism is correctly engaged.**
- **If the status indicators remain red, the upper mounting locking mechanism is not correctly engaged.**

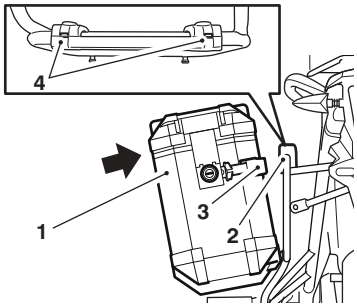

1. **Pannier**
2. **Upper mounting point**
3. **Locking mechanism**
4. **Status indicators**

Lock the pannier to the rail by turning the key to the LOCK position. Remove the key.

Warning

An incorrectly mounted pannier may detach whilst riding, resulting in a dangerous riding condition.

Before riding, always ensure that both panniers are mounted correctly. Ensure that the status indicators located on the top of the pannier's upper mounting points are green and that the lock barrel is turned to the LOCK position and the key removed.

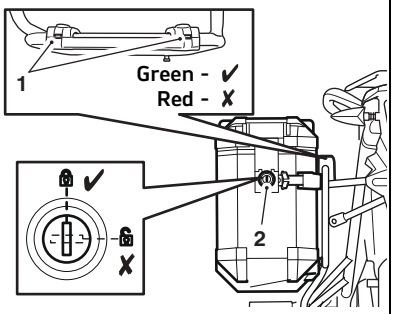

1. **Locking mechanism status indicators**
2. **Lock barrel**

A pannier that detaches whilst riding may cause loss of motorcycle control and an accident.

Pannier Operation

To unlock and open the pannier, insert the key and turn it to the UNLOCK position, then release the pannier lid latch. The lid can then be opened.

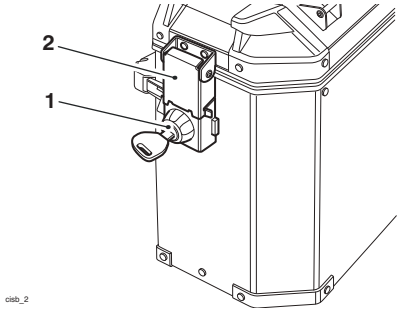

1. **Lock barrel - unlock position**
2. **Pannier lid latch**

The lid can also be removed from the pannier. To remove the lid, detach the retaining straps as shown below.

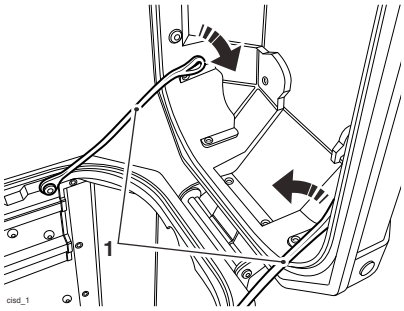

1. **Retaining straps**

Press downwards on the quick release mechanism for the pannier lid hinge. Slide the lid down and to the rear to release the pannier lid hinge. The lid can now be removed from the pannier.

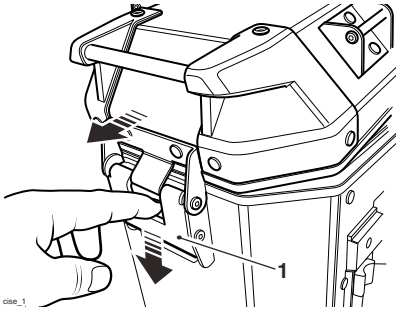

1. **Pannier lid hinge quick release mechanism**

To install the pannier lid, press downwards on the quick release mechanism and relocate the pannier lid hinge. Release the quick release mechanism, ensuring that the hinge is correctly engaged. Attach the retaining straps to the pannier lid.

To close and lock the pannier, close the lid and secure with the pannier lid latch. Turn the key to the LOCK position and remove it.

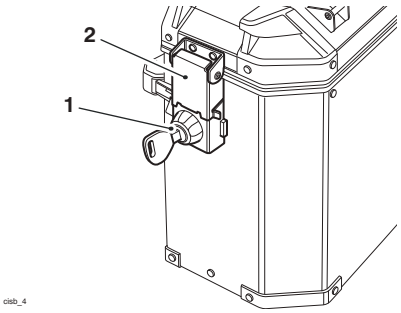

1. **Lock barrel - LOCK position**
2. **Pannier lid latch**

Warning

The maximum safe load for each pannier is stated on a label inside the pannier. Never exceed this loading limit as this may cause the motorcycle to become unstable leading to loss of motorcycle control and an accident.

Warning

The Expedition Aluminium Panniers are designed to be fitted as a pair. Never ride the motorcycle with only one pannier installed. Riding the motorcycle with one pannier installed may cause the motorcycle to become unstable leading to loss of motorcycle control and an accident.

Warning

After fitting or removing the panniers, operate the motorcycle in a safe area free from traffic to gain familiarity with the new handling characteristics. Operation when not familiar with the new characteristics of the motorcycle may result in loss of motorcycle control and an accident.

Warning

Incorrect loading may result in an unsafe riding condition leading to loss of motorcycle control and an accident.

Always ensure any loads carried are evenly distributed on both sides of the motorcycle. Ensure that the load is correctly secured such that it will not move around while the motorcycle is in motion.

Evenly distribute the load within each pannier. Pack heavy items at the bottom and on the inboard side of the pannier.

Always check the load security regularly (though not while the motorcycle is in motion) and ensure that the load does not extend beyond the rear of the motorcycle. Never exceed the maximum vehicle loading weight of:

Explorer XR - 238 kg (525 lb)

Explorer XRx - 236 kg (520 lb)

Explorer XRx-LRH - 238 kg (525 lb)

Explorer XRT - 227 kg (500 lb)

Explorer XC - 236 kg (520 lb)

Explorer XCx - 228 kg (503 lb)

Explorer XCx-LRH - 231 kg (509 lb)

Explorer XCA - 224 kg (494 lb).

This maximum loading weight is made up from the combined weight of the rider, passenger, any accessories fitted and any load carried.

Continued

Warning

Continued

For models that have manually adjustable suspension, ensure that front and rear spring preload and damping settings are suitable for the loading condition of the motorcycle (see page 152).

Note the maximum permissible payload for the panniers is stated on a label inside the pannier.

Warning

This motorcycle must not be operated above the legal road speed limit except in authorised closed-course conditions.

Warning

Only operate this Triumph motorcycle at high speed in closed-course on-road competition or on closed-course racetracks. High-speed operation should only be attempted by riders who have been instructed in the techniques necessary for high-speed riding and are familiar with the motorcycle's characteristics in all conditions.

High-speed operation in any other circumstances is dangerous and will lead to loss of motorcycle control and an accident.

Warning

Never ride an accessory-equipped motorcycle, or a motorcycle carrying a payload of any kind, at speeds above 80 mph (130 km/h). In either/both of these conditions, speeds in excess of 80 mph (130 km/h) should not be attempted even where the legal speed limit permits this.

The presence of accessories and/or payload will cause changes in the stability and handling of the motorcycle.

Failure to allow for changes in motorcycle stability may lead to loss of motorcycle control and an accident.

When riding at high speed, always be aware that various motorcycle configuration and environmental factors can adversely affect the stability of your motorcycle. For example:

- Incorrectly balanced loads on both sides of the motorcycle.
- Incorrectly adjusted front and rear suspension settings.
- Incorrectly adjusted tyre pressures.
- Excessively or unevenly worn tyres.
- Side winds and turbulence from other vehicles.
- Loose clothing.

Remember that the 80 mph (130 km/h) absolute limit will reduce by the fitting of non-approved accessories, incorrect loading, worn tyres, overall motorcycle condition and poor road or weather conditions.

Running-In

cboa

Running-in is the name given to the process that occurs during the first hours of a new vehicle's operation.

In particular, internal friction in the engine will be higher when components are new. Later on, when continued operation of the engine has ensured that the components have 'bedded in', this internal friction will be greatly reduced.

A period of careful running-in will ensure lower exhaust emissions, and will optimise performance, fuel economy and longevity of the engine and other motorcycle components.

Note:

- **The recommended distance for breaking-in new brake discs and brake pads is 200 miles (300 km).**

During the first 500 miles (800 kilometres):

- Avoid extreme braking, ride with caution and allow for greater braking distances during the running-in period.
- Do not use full throttle.
- Avoid high engine speeds at all times.
- Avoid riding at one constant engine speed, whether fast or slow, for a long period of time.
- Avoid aggressive starts, stops, and rapid accelerations, except in an emergency.
- Do not ride at speeds greater than 3/4 of maximum engine speed.

From 500 to 1000 miles (800 to 1,500 kilometres):

- Engine speed can gradually be increased to the rev limit for short periods.

Both during and after running-in has been completed:

- Do not over-rev the engine when cold.
- Do not let the engine labour. Always change down before the engine begins to struggle.
- Do not ride with engine speeds unnecessarily high. Changing up a gear helps reduce fuel consumption, reduces noise and helps to protect the environment.

Safe Operation

Daily Safety Checks

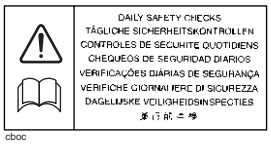

cboc

Check the following items each day before you ride. The time required is minimal, and these checks will help ensure a safe, reliable ride.

If any irregularities are found during these checks, refer to the Maintenance and Adjustment section or see your authorised Triumph dealer for the action required to return the motorcycle to a safe operating condition.

Warning

Failure to perform these checks every day before you ride may result in serious motorcycle damage or an accident causing serious injury or death.

Check:

Fuel: Adequate supply in tank, no fuel leaks (page 87).

Engine Oil: Correct level visible at sight glass. Add correct specification oil as required. No leaks from the engine or oil cooler (page 138).

Final Drive: No oil leaks (page 145).

Tyres/Wheels: Correct inflation pressures (when cold). Tread depth/wear, tyre/wheel damage, punctures etc. (page 155).

Nuts, Bolts, Fasteners: Visually check that steering and suspension components, axles, and all controls are properly tightened or fastened. Inspect all areas for loose/damaged fixings.

Steering Action: Smooth but not loose from lock to lock. No binding of any of the control cables (page 149).

Brakes: Pull the brake lever and push the brake pedal to check for correct resistance. Investigate any lever/pedal where the travel is excessive before meeting resistance, or if either control feels spongy in operation (page 145).

ABS: Ensure that the ABS warning light does not remain illuminated at speeds above 6 mph (10 km/h) when moving off (page 25).

Brake Pads: There should be more than 1.5 mm of friction material remaining on all the pads (page 145).

Brake Fluid Levels: No brake and clutch fluid leakage. Brake fluid levels must be between the MAX and MIN marks on both reservoirs (page 147).

Front Forks: Smooth action. No leaks from fork seals (page 150).

Throttle: Throttle grip free play 2 - 3 mm. Ensure that the throttle grip returns to the idle position without sticking (page 74).

Clutch Fluid Level: No brake and clutch fluid leakage. The clutch fluid level must be between the MAX and MIN marks on the reservoir (page 144).

Coolant: No coolant leakage. Check the coolant level in the expansion tank (when the engine is cold) (page 141).

Electrical Equipment: All lights and the horn function correctly (page 68).

Engine Stop: Stop switch turns the engine off (page 112).

Stands: Returns to the fully up position by spring tension. Return springs not weak or damaged (page 92).

This page intentionally left blank

HOW TO RIDE THE MOTORCYCLE

Table of Contents

To Stop the Engine . . . 112
To Start the Engine . . . 112
Moving Off . . . 113
Changing Gears . . . 114
Braking . . . 115
Anti-Lock Braking Systems (ABS) . . . 118
- Optimised Cornering ABS . . . 119
- ABS Warning Light . . . 120

Hill Hold Control - Explorer XRT and Explorer XCA Only . . . 121
- Activation . . . 122
- Deactivation . . . 123
- Hill Hold Unavailable Message . . . 123

Parking . . . 124
Considerations for High-Speed Operation . . . 125
- General . . . 125
- Steering . . . 125
- Luggage . . . 125
- Brakes . . . 125
- Tyres . . . 126
- Fuel . . . 126
- Engine Oil . . . 126
- Final Drive Oil . . . 126
- Coolant . . . 126
- Electrical Equipment . . . 126
- Miscellaneous . . . 126

To Stop the Engine

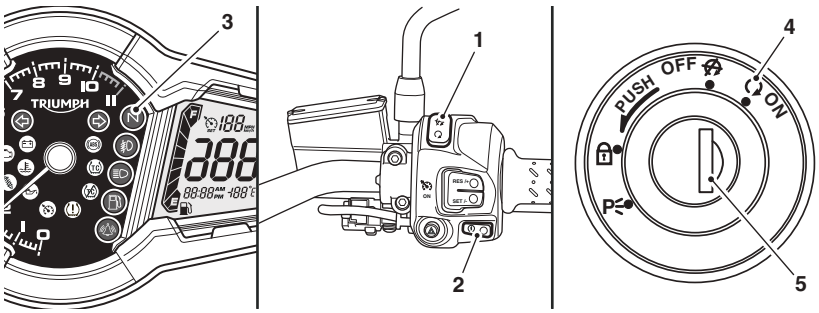

1. **Engine stop switch**
2. **Starter button**
3. **Neutral indicator light**
4. **ON position**
5. **Ignition switch**

Close the throttle completely.

Select neutral.

Turn the ignition switch off.

Select first gear.

Support the motorcycle on a firm, level surface with the side or centre stand.

Lock the steering.

Caution

The engine should normally be stopped by turning the ignition switch to the OFF position. The engine stop switch is for emergency use only. Do not leave the ignition switched on with the engine stopped. Electrical damage may result.

To Start the Engine

Check that the engine stop switch is in the RUN position.

Ensure the transmission is in neutral.

Turn the ignition switch on.

Note:

- **When the ignition is switched on, the tachometer needle will quickly sweep from zero to maximum and then return to zero. The instrument warning lights will illuminate and will then go off (except those which normally remain on until the engine starts - see Warning Lights on page 24). It is not necessary to wait for the needle to return to zero before starting the engine.**
- **A transponder is fitted within the key to turn off the engine immobiliser. To ensure the immobiliser functions correctly, always have only one of the ignition keys near the ignition switch. Having two ignition keys near the switch may interrupt the signal between the transponder and the engine immobiliser. In this situation the engine immobiliser will remain active until one of the ignition keys is removed.**

Pull the clutch lever fully into the handlebar.

Leaving the throttle fully closed, push the starter button until the engine starts.

Warning

Never start the engine or run the engine in a confined area. Exhaust fumes are poisonous and can cause loss of consciousness and death within a short period of time. Always operate your motorcycle in the open-air or in an area with adequate ventilation.

Caution

Do not operate the starter continuously for more than 5 seconds as the starter motor will overheat and the battery will become discharged. Wait 15 seconds between each operation of the starter to allow for cooling and recovery of battery power.

Do not let the engine idle for long periods as this may lead to overheating which will cause damage to the engine.

Caution

If the low oil pressure warning light illuminates after starting the engine, stop the engine immediately and investigate the cause. Running the engine with low oil pressure will cause severe engine damage.

- The motorcycle is equipped with starter lockout switches. The switches prevent the electric starter from operating when the transmission is not in neutral with the side stand down.
- If the side stand is extended whilst the engine is running, and the transmission is not in neutral then the engine will stop regardless of clutch position.

Moving Off

Pull in the clutch lever and select first gear. Open the throttle a little and let out the clutch lever slowly. As the clutch starts to engage, open the throttle a little more, allowing enough engine speed to avoid stalling.

Changing Gears

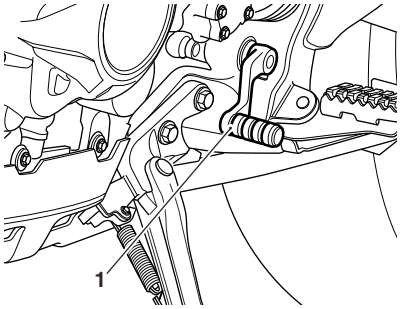

1. **Gear-change pedal**

Close the throttle while pulling in the clutch lever. Change into the next higher or lower gear. Open the throttle part way, while releasing the clutch lever. Always use the clutch when changing gear.

Warning

With the traction control enabled, it will limit the amount of front wheel lift and rear wheel slip.

If the traction control is not functioning or disabled (see TC Disable/Enable on page 52 or Riding Mode Configuration on page 62), avoid opening the throttle too far or too fast in any of the lower gears as this can lead to the front wheel lifting from the ground (pulling a wheelie) and to the rear tyre breaking traction (wheel spin).

Always open the throttle cautiously, particularly if you are unfamiliar with the motorcycle, as a wheelie or loss of traction will cause loss of motorcycle control and an accident.

Note:

- **The gear change mechanism is the positive stop type. This means that, for each movement of the gear change pedal, you can only select each gear, one after the other, in ascending or descending order.**

Warning

Do not change to a lower gear at speeds that will cause excessive engine rpm (r/min). This can lock the rear wheel causing loss of motorcycle control and an accident. Engine damage may also be caused. Changing down should be done such that low engine speeds will be ensured.

Braking

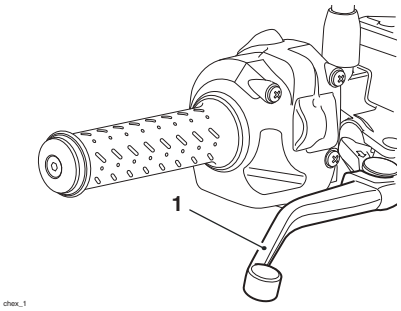

1. **Front brake lever**

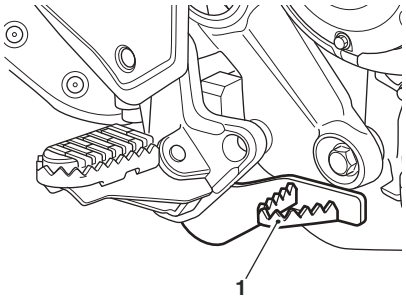

1. **Rear brake pedal**

All Explorer models are equipped with a partially integrated braking system, combined with the Anti-lock Braking System (ABS).

The partially integrated braking system is designed to increase the braking efficiency of the rider.

When the rider applies the front brake, a small amount of rear brake is also applied, allowing for balanced braking.

The amount of rear brake application is related to the level of braking force applied by the rider through the front brake lever.

Use of the rear brake pedal alone will only apply the rear brake.

For full brake effectiveness, always operate the front brake lever and rear brake pedal together.

Warning

WHEN BRAKING, OBSERVE THE FOLLOWING:

Close the throttle completely, leaving the clutch engaged to allow the engine to help slow down the motorcycle.

Change down one gear at a time such that the transmission is in first gear when the motorcycle comes to a complete stop.

When stopping, always apply both brakes. Normally the front brake should be applied a little more than the rear.

Change down or fully disengage the clutch as necessary to keep the engine from stalling.

If the ABS is not functioning or has been disabled (see ABS Disable/Enable on page 51 or Riding Mode Configuration on page 62), never lock the brakes, as this may cause loss of motorcycle control and an accident.

Warning

For emergency braking, disregard down changing, and concentrate on applying the front and rear brakes as hard as possible without skidding. Riders should practice emergency braking in a traffic-free area (see ABS warnings below/over).

Triumph strongly recommends that all riders take a course of instruction, which includes advice on safe brake operation. Incorrect brake technique could result in loss of motorcycle control and an accident.

Warning

For your safety, always exercise extreme caution when braking (whether or not ABS is fitted), accelerating or turning as any incautious action can cause loss of motorcycle control and an accident. Independent use of the front or rear brakes reduces overall braking performance. Extreme braking may cause either wheel to lock, reducing control of the motorcycle and causing an accident (see ABS warnings below).

When possible, reduce speed or brake before entering a turn as closing the throttle or braking in mid-turn may cause wheel slip leading to loss of motorcycle control and an accident.

When riding in wet or rainy conditions, or on loose surfaces, the ability to manoeuvre and stop will be reduced. All of your actions should be smooth under these conditions. Sudden acceleration, braking or turning may cause loss of motorcycle control and an accident.

See also Optimised Cornering ABS on page 119.

Warning

When descending a long, steep gradient or mountain pass, make use of the engine's braking effect by down changing and use both front and rear brakes intermittently. Continuous brake application or use of the rear brake only can overheat the brakes and reduce their effectiveness leading to loss of motorcycle control and an accident.

Warning

Riding with your foot on the brake pedal or your hands on the brake lever may actuate the brake light, giving a false indication to other road users. It may also overheat the brake, reducing braking effectiveness leading to loss of motorcycle control and an accident.

Warning

Do not coast with the engine switched off, and do not tow the motorcycle. The transmission is pressure-lubricated only when the engine is running. Inadequate lubrication may cause damage or seizure of the transmission, which can lead to sudden loss of motorcycle control and an accident.

Warning

When using the motorcycle on loose, wet, or muddy roads, braking effectiveness will be reduced by dust, mud or moisture collecting on the brakes. Always brake earlier in these conditions to ensure brake surfaces are cleaned by the braking action. Riding the motorcycle with brakes contaminated with dust, mud or moisture may cause loss of motorcycle control and an accident.

Caution

Due to the nature of the partially integrated braking system, any attempts to spin the rear wheel whilst the front brake is applied (Burnout) will cause damage to the braking system and drivetrain.

Anti-Lock Braking Systems (ABS)

Warning

ABS helps prevent the wheels from locking, therefore maximising the effectiveness of the braking system in emergencies and when riding on slippery surfaces. The potentially shorter braking distances ABS allows under certain conditions are not a substitute for good riding practice.

Always ride within the legal speed limit.

Never ride without due care and attention and always reduce speed in consideration of weather, road and traffic conditions.

Take care when cornering. If the brakes are applied in a corner, ABS will not be able to counteract the weight and momentum of the motorcycle. This can result in loss of motorcycle control and an accident.

Under some circumstances it is possible that a motorcycle equipped with ABS may require a longer stopping distance than an equivalent motorcycle without ABS.

Warning

If the ABS is not functioning or has been disabled (see Bike Setup on page 50 or Riding Mode Configuration on page 62), the brake system will continue to function as a non-ABS braking system.

Do not continue to ride for longer than is necessary with the warning light illuminated. In the event of a fault, contact an authorised Triumph dealer as soon as possible to have the fault checked and rectified.

In this situation, braking too hard will cause the wheels to lock resulting in loss of motorcycle control and an accident.

Note:

- **Normally, the rider will perceive ABS operation as a harder feel or a pulsation of the brake lever and pedal.**
- **The ABS may be activated by sudden upward or downward changes in the road surface.**

Optimised Cornering ABS

The Explorer models listed below are equipped with the optimised cornering ABS:

- Explorer XRx
- Explorer XRx-LRH
- Explorer XRT
- Explorer XCx
- Explorer XCx-LRH
- Explorer XCA.

The optimised cornering ABS is a system designed to give the rider increased control should the ABS be activated whilst the motorcycle is leaning in a corner.

A sensor constantly monitors the lean angle of the motorcycle. If the motorcycle is leaning in a corner and the ABS is activated, the system will use the lean angle measurement to apply the ABS in a manner most suitable to help the rider maintain motorcycle control.

Warning

The optimised cornering ABS is a system designed to help the rider in emergency braking situations.

The system is designed to give the rider increased control should the ABS be activated whilst the motorcycle is leaning in a corner.

The potential increased control that the optimised cornering braking system allows under certain conditions is not a substitute for good riding practice.

Continued

Warning

Continued

Always ride within the legal speed limit.

Never ride without due care and attention and always reduce speed in consideration of weather, surface and traffic conditions.

Take care when cornering.

If the motorcycle is leaning in a corner and the ABS is activated, the optimised cornering ABS will use the lean angle measurement from a sensor to apply the ABS in a manner most suitable to help the rider maintain motorcycle control. The optimised cornering ABS will not however be able to fully counteract the weight and momentum of the motorcycle and braking too hard whilst cornering may result in loss of motorcycle control and an accident.

Under some circumstances it is possible that a motorcycle equipped with optimised cornering ABS may require a longer stopping distance than an equivalent motorcycle without ABS, or an equivalent motorcycle equipped with ABS but not equipped with optimised cornering ABS.

Warning

If the optimised cornering ABS is not functioning, the ABS warning light will illuminate and the message ABS SYSTEM - CORNERING ABS DISABLED will be displayed in the multifunction display.

In this situation, the ABS will continue to operate but without the optimised cornering function, provided that:

- There are no other ABS faults
- The ABS has not been disabled by the rider (see Bike Setup on page 50 or Riding Mode Configuration on page 62).

Do not continue to ride for longer than is necessary with the warning light illuminated. In the event of a fault, contact an authorised Triumph dealer as soon as possible to have the fault checked and rectified.

In this situation, braking too hard during cornering may result in loss of motorcycle control and an accident.

ABS Warning Light

When the ignition switch is turned to the ON position, it is normal for the ABS warning light to flash on and off (see page 25). If the ABS warning light is constantly illuminated it indicates that the ABS function is not available because:

- the ABS has been disabled by the rider (see Bike Setup on page 50 or Riding Mode Configuration on page 62).
- the ABS has a malfunction that requires investigation.

If the warning light becomes illuminated while riding, it indicates that the ABS has a malfunction that requires investigation. One of the following warning messages may be displayed in the multifunction display:

- WARNING - ABS SYSTEM DIASBLED
- ABS SYSTEM - CORNERING ABS DISABLED (models equipped with optimised cornering ABS only).

See page 25 for full details of the ABS warning light operation and it's associated instrument warning messages.

Warning

The ABS warning light will illuminate after three minutes, if the rear wheel is driven while the motorcycle is on a stand:

If the motorcycle was ridden prior to being placed on a stand, this time will reduced to one minute and the ABS warning light will be accompanied by the MIL.

This reaction is normal.

When the ignition is switched off and the motorcycle is re-started, the warning light(s) will remain illuminated until the motorcycle reaches a speed exceeding 6 mph (10 km/h).

Warning

The ABS computer operates by comparing the relative speed of the front and rear wheels. Use of non-recommended tyres can affect wheel speed and cause the ABS function not to operate, potentially leading to loss of motorcycle control and an accident in conditions where the ABS would normally function.

Hill Hold Control - Explorer XRT and Explorer XCA Only

Hill hold control is designed to assist the rider in making hill starts. The system (when activated) will apply the rear brake to hold the motorcycle in position. The system will then automatically deactivate and release the rear brake when it detects that the rider is attempting to move off.

Warning

Avoid activating the hill hold control system on slippery surfaces.

The hill hold control system will not be able to prevent the motorcycle from slipping, if it is activated on a surface where there is insufficient levels of tyre grip to hold the motorcycle in position.

Activating the hill hold control system on a slippery surface could cause the motorcycle to slip, leading to loss of motorcycle control and an accident.

Warning

The hill hold control system will deactivate if the side stand is moved to the down position, the ignition is switched off, the engine stop switch is moved to the STOP position or if the engine is stopped for any other reason.

The hill hold control system will also deactivate if a fault occurs which causes the MIL to illuminate.

In these circumstances, the front brake must be manually applied to prevent the motorcycle from rolling.

Failure to prevent the motorcycle from rolling may lead to loss of motorcycle control and an accident.

Caution

The hill hold control system is not designed to be used as a parking brake.

Do not continually activate the hill hold system for periods of longer than 10 minutes.

Continuous activation of the hill hold control system for periods of longer than 10 minutes may cause damage to the ABS system.

Activation

Note:

- **The hill hold control system will not operate if there is a fault with the ABS or engine management systems and the ABS and/or MIL warning lights are illuminated.**

To activate the hill hold control system, bring the motorcycle to a stop.

For hill hold control to activate:

- The engine must be running
- The side stand must be in the up position
- The motorcycle must be stationary.

When all of the above conditions are met, squeeze the front brake lever firmly and quickly, then release. Upon releasing the lever, the message HILL HOLD ACTIVATED will appear in the multifunction display.

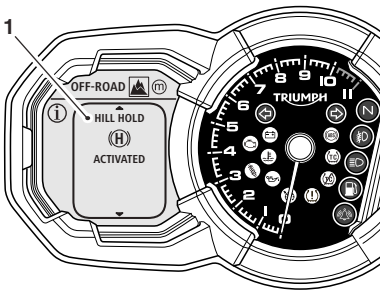

1. Instrument message

The hill hold control system is now active and the rear brake will be automatically applied.

The message HILL HOLD ACTIVATED will remain visible in the multifunction display until hill hold control is deactivated.

The rear brake will remain applied until:

- The system detects that the rider is attempting to move off.
- Hill hold control is manually deactivated by the rider.

Deactivation

The hill hold control system will automatically deactivate when it detects that the rider is attempting to move off. The system will progressively release the rear brake to assist the rider in moving off.

The hill hold control system can also be manually deactivated by a second firm squeeze of the front brake lever.

The message HILL HOLD DEACTIVATED will be displayed briefly in the multifunction display.

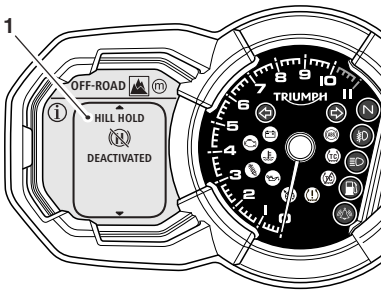

1. **Instrument message**

Hill Hold Unavailable Message

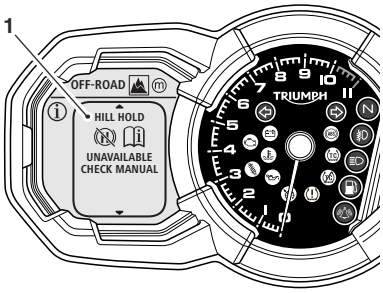

If when attempting to activate the hill hold control system, the message HILL HOLD UNAVAILABLE - CHECK MANUAL is displayed, this indicates one or more of the following:

- The activation conditions described on page 122 have not been met.
- There is a fault with the ABS or engine management systems and the ABS and/or MIL warning lights are illuminated. See Warning Lights on page 24.

The hill hold control system can be enabled or disabled (see Bike Setup on page 50).

Parking

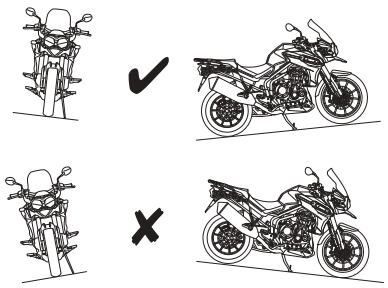

Select neutral and turn the ignition switch to the OFF position.

Lock the steering to help prevent theft.

Always park on a firm, level surface to prevent the motorcycle from falling. This is particularly important when parking off-road.

When parking on a hill, always park facing uphill to prevent the motorcycle from rolling off the stand. Engage first gear to prevent the motorcycle from moving.

On a lateral (sideways) incline, always park such that the incline naturally pushes the motorcycle towards the side stand.

Do not park on a lateral (sideways) incline of greater than 6° and never park facing downhill.

Note:

- **When parking near traffic at night, or when parking in a location where parking lights are required by law, leave the tail, licence plate and position lights on by turning the ignition switch to P (PARK).**

Do not leave the switch in the P position for long periods of time as this will discharge the battery.

Warning

Do not park on a soft or on a steeply inclined surface. Parking under these conditions may cause the motorcycle to fall over causing damage to property and personal injury.

Warning

Petrol is extremely flammable and can be explosive under certain conditions. If parking inside a garage or other structure, be sure it is well ventilated and the motorcycle is not close to any source of flame or sparks. This includes any appliance with a pilot light.

Failure to follow the above advice may cause a fire resulting in damage to property or personal injury.

Warning

The engine and exhaust system will be hot after riding. DO NOT park where pedestrians and children are likely to touch the motorcycle.

Touching any part of the engine or exhaust system when hot may cause unprotected skin to become burnt.

Considerations for High-Speed Operation

Warning

This Triumph motorcycle should be operated within the legal speed limits for the particular road travelled. Operating a motorcycle at high speeds can be potentially dangerous since the time available to react to given traffic situations is greatly reduced as road speed increases. Always reduce speed in consideration of weather and traffic conditions.

Warning

Only operate this Triumph motorcycle at high speed in closed-course on-road competition or on closed-course racetracks. High-speed operation should only then be attempted by riders who have been instructed in the techniques necessary for high-speed riding and are familiar with the motorcycle's characteristics in all conditions.

High-speed operation in any other circumstances is dangerous and will lead to loss of motorcycle control and an accident.

Warning

The handling characteristics of a motorcycle at high speed may vary from those you are familiar with at legal road speeds. Do not attempt high-speed operation unless you have received sufficient training and have the required skills as a serious accident may result from incorrect operation.

Warning

The listed items below are extremely important and must never be neglected. A problem, which may not be noticed at normal operating speeds, may be greatly exaggerated at high speeds.

General

Ensure the motorcycle has been maintained according to the scheduled maintenance chart.

Steering

Check that the handlebar turns smoothly without excessive free play or tight spots. Ensure that the control cables do not restrict the steering in any way.

Luggage

Make certain that any luggage containers are closed, locked and securely fitted to the motorcycle.

Brakes

Check that the front and rear brakes are functioning properly.

Tyres

High-speed operation is hard on tyres, and tyres that are in good condition are crucial to riding safely. Examine their overall condition, inflate to the correct pressure (when the tyres are cold), and check the wheel balance. Securely fit the valve caps after checking tyre pressures. Observe the information given in the Maintenance and Specification sections on tyre checking and tyre safety.

Fuel

Have sufficient fuel for the increased fuel consumption that will result from high-speed operation.

Caution

The exhaust system is fitted with a catalytic converter to help reduce exhaust emission levels. The catalytic converter can be permanently damaged if the motorcycle is allowed to run out of fuel or if the fuel level is allowed to get very low. Always ensure you have adequate fuel for your journey.

Engine Oil

Make certain that the engine oil level is correct. Ensure that the correct grade and type of oil is used when topping up.

Final Drive Oil

Make certain that the final drive oil level is correct. Ensure that the correct grade and type of oil is used when topping up.

Coolant

Check that the coolant level is at the upper level line in the expansion tank. (Always check the level with the engine cold.)

Electrical Equipment

Make certain that the headlight, rear/brake light, direction indicators, horn, etc. all work properly.

Miscellaneous

Visually check that all fixings are tight.

ACCESSORIES, LOADING AND PASSENGERS

The addition of accessories and carriage of additional weight can affect the motorcycle's handling characteristics causing changes in stability and necessitating a reduction in speed. The following information has been prepared as a guide to the potential hazards of adding accessories to a motorcycle and carrying passengers and additional loads.

Adjust the headlight aim to compensate for additional loads (see page 170).

Warning

Incorrect loading may result in an unsafe riding condition leading to loss of motorcycle control and an accident.

Always ensure any loads carried are evenly distributed on both sides of the motorcycle. Ensure that the load is correctly secured such that it will not move around while the motorcycle is in motion.

Evenly distribute the load within each pannier. Pack heavy items at the bottom and on the inboard side of the pannier.

Always check the load security regularly (though not while the motorcycle is in motion) and ensure that the load does not extend beyond the rear of the motorcycle. Never exceed the maximum vehicle loading weight of:

Explorer XR - 238 kg (525 lb)

Explorer XRx - 236 kg (520 lb)

Explorer XRx-LRH - 238 kg (525 lb)

Continued

Warning

Continued

Explorer XRT - 227 kg (500 lb)

Explorer XC - 236 kg (520 lb)

Explorer XCx - 228 kg (503 lb)

Explorer XCx-LRH - 231 kg (509 lb)

Explorer XCA - 224 kg (494 lb).

This maximum loading weight is made up from the combined weight of the rider, passenger, any accessories fitted and any load carried.

For models that have manually adjustable suspension, ensure that front and rear spring preload and damping settings are suitable for the loading condition of the motorcycle (see page 152).

Note the maximum permissible payload for the panniers is stated on a label inside the pannier.

Warning

The maximum safe load for each pannier is stated on a label inside the pannier. Never exceed this loading limit as this may cause the motorcycle to become unstable leading to loss of motorcycle control and an accident.

Warning

The maximum safe load for the top box is stated on a label inside the top box. Never exceed this loading limit as this may cause the motorcycle to become unstable leading to loss of motorcycle control and an accident.

Warning

Do not install accessories or carry luggage that impairs the control of the motorcycle. Make sure that you have not adversely affected the visibility of any lighting component, road clearance, banking capability (i.e. lean angle), control operation, wheel travel, front fork movement, visibility in any direction, or any other aspect of the motorcycle's operation.

Warning

Never attempt to store any items between the frame and the fuel tank. This can restrict the steering and will cause loss of motorcycle control leading to an accident.

Weight attached to the handlebar or front fork will increase the mass of the steering assembly and can result in loss of steering control leading to an accident.

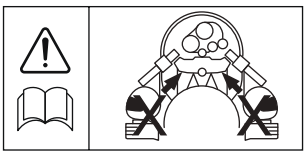

Warning

If the passenger seat is used to carry small objects, they must not exceed 5 kg (11 lbs) in weight, must not impair control of the motorcycle, must be securely attached and must not extend beyond the rear or sides of the motorcycle.

Carrying objects in excess of 5 kg (11 lbs) in weight, that are insecure, impair control or extend beyond the rear or sides of the motorcycle may lead to loss of motorcycle control and an accident.

Even if small objects are correctly loaded onto the passenger seat, the maximum speed of the motorcycle must be reduced to 80 mph (130 km/h).

Warning

Do not carry a passenger unless he or she is tall enough to reach the footrests provided.

A passenger who is not tall enough to reach the footrests will be unable to sit securely on the motorcycle and may cause instability leading to loss of motorcycle control and an accident.

Warning

Your passenger should be instructed that he or she can cause loss of motorcycle control by making sudden movements or by adopting an incorrect seated position.

The rider should instruct the passenger as follows:

- It is important that the passenger sits still while the motorcycle is in motion and does not interfere with the operation of the motorcycle.
- To keep his or her feet on the passenger footrests and to firmly hold onto the grab handles or the rider's waist or hips.

Advise the passenger to lean with the rider when travelling around corners and not to lean unless the rider does so.

Warning

The handling and braking capabilities of a motorcycle will be affected by the presence of a passenger. The rider must make allowances for these changes when operating the motorcycle with a passenger and should not attempt such operation unless trained to do so and without becoming familiar and comfortable with the changes in motorcycle operating characteristics that this brings about.

Motorcycle operation without making allowances for the presence of a passenger could lead to loss of motorcycle control and an accident.

Warning

Do not carry animals on your motorcycle.

An animal could make sudden and unpredictable movements that could lead to loss of motorcycle control and an accident

Warning

This motorcycle must not be operated above the legal road speed limit except in authorised closed-course conditions.

Warning

Only operate this Triumph motorcycle at high speed in closed-course, on-road competition or on closed-course racetracks. High-speed operation should only then be attempted by riders who have been instructed in the techniques necessary for high-speed riding and are familiar with the motorcycle's characteristics in all conditions.

High-speed operation in any other circumstances is dangerous and will lead to loss of motorcycle control and an accident.

Warning

Never ride an accessory-equipped motorcycle, or a motorcycle carrying a payload of any kind, at speeds above 80 mph (130 km/h). In either/both of these conditions, speeds in excess of 80 mph (130 km/h) should not be attempted even where the legal speed limit permits this.

The presence of accessories and/or payload will cause changes in the stability and handling of the motorcycle.

Failure to allow for changes in motorcycle stability may lead to loss of motorcycle control and an accident.

When riding at high speed, always be aware that various motorcycle configuration and environmental factors can adversely affect the stability of your motorcycle. For example:

- Incorrectly balanced loads on both sides of the motorcycle.
- Incorrectly adjusted front and rear suspension settings.
- Incorrectly adjusted tyre pressures.
- Excessively or unevenly worn tyres.
- Side winds and turbulence from other vehicles.
- Loose clothing.

Remember that the 80 mph (130 km/h) absolute limit will reduce by the fitting of non-approved accessories, incorrect loading, worn tyres, overall motorcycle condition and poor road or weather conditions.

MAINTENANCE AND ADJUSTMENT

Table of Contents

Scheduled Maintenance . . . 134
Engine Oil . . . 138
- Oil Level Inspection . . . 138
- Oil and Oil Filter Change . . . 139
- Disposal of Used Engine Oil and Oil Filters . . . 140
- Oil Specification and Grade . . . 140

Cooling System . . . 141
- Corrosion Inhibitors . . . 141
- Coolant Level Inspection . . . 141
- Coolant Level Adjustment . . . 142
- Coolant Change . . . 142
- Radiator and Hoses . . . 142
- Inspection . . . 143

Clutch . . . 144
- Clutch Fluid Level Inspection and Adjustment . . . 144

Final Drive Unit . . . 145
- Final Drive Oil Level Adjustment . . . 145

Brakes . . . 145
- Brake Wear Inspection . . . 145
- Breaking-in New Brake Discs and Pads . . . 146
- Brake Pad Wear Compensation . . . 146
- Disc Brake Fluid . . . 147
- Front Brake Fluid Level Inspection and Adjustment . . . 147
- Rear Brake Fluid Inspection and Adjustment . . . 148
- Brake Light . . . 148

Steering/Wheel Bearings . . . 149
- Steering Inspection . . . 149
- Inspecting the Steering (Headstock) Bearings for Free Play . . . 149
- Wheel Bearings Inspection . . . 150

Front Suspension . . . 150
- Front Fork Inspection . . . 150
- Front Suspension Adjustment . . . 151
- Compression Damping Adjustment . . . 151

Rebound Damping Adjustment 152
Front Suspension Setting Chart 152
Rear Suspension 153
Rear Suspension Adjustment 153
Spring Pre-Load Adjustment 153
Rebound Damping Adjustment 154
Rear Suspension Setting Chart 154
Tyres 155
Tyre Inflation Pressures 156
Tyre Wear 156
Minimum Recommended Tread Depth 157
Tyre Replacement 158
Battery 161
Battery Removal 161
Battery Disposal 162
Battery Maintenance 162
Battery Discharge 162
Battery Maintenance During Storage and Infrequent Use of the Motorcycle 163
Battery Charging 163
Battery Installation 164
Fuse Boxes 165
Main fuse 165
ABS Fuse Box 165
Main Fuse Box 165
Fuse Identification 166
Chassis Electronic Control Module (Chassis ECM) 167
Headlights 169
Headlight Adjustment 170
Bulb Replacement 171
Headlights 171
Position Light 172
Front Fog Lights (if fitted) 172
Rear Light/Licence Plate Light 172
Direction Indicator Lights 172
LED Direction Indicator Lights 172

Maintenance and Adjustment

Cleaning 173
Care of Matt Paintwork. 173
Preparation for Washing 173
Where to be Careful 173
After Washing 174
Seat Care. 174
Unpainted Aluminium Items. 174
Cleaning the Windscreen and Clear Panels. 174
Cleaning of the Exhaust System. 175
Care of Leather Products. 176

Scheduled Maintenance

To maintain the motorcycle in a safe and reliable condition, the maintenance and adjustments outlined in this section must be carried out as specified in the schedule of daily checks, and also in line with the scheduled maintenance chart. The information that follows describes the procedures to follow when carrying out the daily checks and some simple maintenance and adjustment items.

Warning

All maintenance is vitally important and must not be neglected. Incorrect maintenance or adjustment may cause one or more parts of the motorcycle to malfunction. A malfunctioning motorcycle may lead to loss of motorcycle control and an accident.

Weather, terrain and geographical location affects maintenance. The maintenance schedule should be adjusted to match the particular environment in which the vehicle is used and the demands of the individual owner.

Special tools, knowledge and training are required in order to correctly carry out the maintenance items listed in the scheduled maintenance chart. Only an authorised Triumph dealer will have this knowledge and equipment.

Since incorrect or neglected maintenance can lead to a dangerous riding condition, always have an authorised Triumph dealer carry out the scheduled maintenance of this motorcycle.

Scheduled maintenance may be carried out by your dealer in three ways; annual maintenance, mileage based maintenance or a combination of both, depending on the mileage the motorcycle travels each year.

1. Motorcycles travelling less than 10,000 miles per year must be maintained annually. In addition to this, mileage based items require maintenance at their specified intervals, as the motorcycle reaches this mileage.
2. Motorcycles travelling approximately 10,000 miles per year must have the annual maintenance and the specified mileage based items carried out together.
3. Motorcycles travelling more than 10,000 miles per year must have the mileage based items maintained as the motorcycle reaches the specified mileage. In addition to this, annual based items will require maintenance at their specified annual intervals.

In all cases maintenance must be carried out at or before the specified maintenance intervals shown. Consult an authorised Triumph dealer for advice on which maintenance schedule is most suitable for your motorcycle.

Triumph Motorcycles cannot accept any responsibility for damage or injury resulting from incorrect maintenance or improper adjustment.

Operation Description	Odometer Reading in Miles (km) or Time Period, whichever comes first					
		First Service	Annual Service	Mileage based service		
	Every	500 (800) 1 month	year	10,000 and 30,000 (16,000 and 48,000)	20,000 (32,000)	40,000 (64,000)
Lubrication						
Engine – check for leaks	Day	•	•	•	•	•
Engine oil – renew	-	•	•	•	•	•
Engine oil filter – renew	-	•	•	•	•	•
Fuel System and Engine Management						
Autoscan – carry out a full Autoscan using the Triumph diagnostic tool (print a customer copy)	-	•	•	•	•	•
Fuel system – check for leaks, chafing etc.	Day	•	•	•	•	•
Air cleaner – renew	-			•	•	•
Throttle body plate (butterfly) – check/clean	-			•	•	•
Exhaust clamp bolts – check/adjust	-	•	•	•	•	•
Throttle bodies – balance	-			•	•	•
Secondary air injection system – check	-				•	•
Fuel hoses – renew	Every four years, regardless of mileage					
Evaporative loss hoses – renew	Every four years, regardless of mileage					
Ignition System						
Spark plugs – check	-			•		
Spark plugs – renew	-				•	•
Cooling System						
Cooling system – check for leaks	Day	•	•	•	•	•
Coolant level – check/adjust	Day	•	•	•	•	•
Coolant – renew	Every 3 years, regardless of mileage					

Operation Description	Odometer Reading in Miles (km) or Time Period, whichever comes first					
		First Service	Annual Service	Mileage based service		
	Every	500 (800) 1 month	year	10,000 and 30,000 (16,000 and 48,000)	20,000 (32,000)	40,000 (64,000)
Engine						
Clutch – check operation	Day	•	•	•	•	•
Clutch master cylinder – check for leaks	-	•	•	•	•	•
Clutch fluid levels – check	Day	•	•	•	•	•
Clutch fluid – renew	Every 2 years, regardless of mileage					
Valve clearances – check/adjust	-				•	•
Wheels and Tyres						
Wheels – inspect for damage	Day	•	•	•	•	•
Wheel bearings – check for wear/smooth operation	-	•	•	•	•	•
Wheels – check wheels for broken or damaged spokes and check spoke tightness (models with spoked wheels only)	-	•	•	•	•	•
Tyre wear/tyre damage – check	Day	•	•	•	•	•
Tyre pressures – check/adjust	Day	•	•	•	•	•
Steering and Suspension						
Steering – check for free operation	Day	•	•	•	•	•
Forks – check for leaks/smooth operation	Day	•	•	•	•	•
Fork oil – renew	-					•
Headstock bearings – check/adjust	-		•	•	•	•
Headstock bearings – lubricate	-				•	•
Rear suspension linkage – check/lubricate	-				•	•

Operation Description	Odometer Reading in Miles (km) or Time Period, whichever comes first					
		First Service	Annual Service	Mileage based service		
	Every	500 (800) 1 month	year	10,000 and 30,000 (16,000 and 48,000)	20,000 (32,000)	40,000 (64,000)
Brakes						
Brake pads – check wear levels	Day	•	•	•	•	•
Brake master cylinders – check for fluid leaks	Day	•	•	•	•	•
Brake calipers – check for fluid leaks and seized pistons	Day	•	•	•	•	•
Brake fluid levels – check	Day	•	•	•	•	•
Brake fluid – renew	Every 2 years, regardless of mileage					
Final Drive						
Final drive – check for oil leaks	Day	•	•	•	•	•
Final drive oil level – check	-		•	•	•	•
Final drive oil – renew – **only first service**	-	•				
Electrical						
Lights, instruments and electrical systems – check	Day	•	•	•	•	•
General						
Fasteners – inspect visually for security	Day	•	•	•	•	•
Accessory rack sliding carriage – check for correct operation‡	-		•	•	•	•
Accessory pannier link bar – check for correct operation and adjustment‡	-	•	•	•	•	•
Side stand – check operation	Day	•	•	•	•	•
Centre stand – check operation	Day	•	•	•	•	•
Centre stand flanged sleeves – check/clean/grease	-		•	•	•	•

‡Only if fitted.

Engine Oil

In order for the engine, transmission, and clutch to function correctly, maintain the engine oil at the correct level, and change the oil and oil filter in accordance with scheduled maintenance requirements.

Warning

Motorcycle operation with insufficient, deteriorated, or contaminated engine oil will cause accelerated engine wear and may result in engine or transmission seizure. Seizure of the engine or transmission may lead to sudden loss of motorcycle control and an accident.

Oil Level Inspection

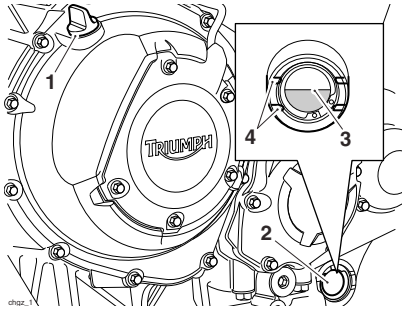

1. **Filler plug**
2. **Sight glass**
3. **Oil level (correct level shown)**
4. **Crankcase oil level lines**

Warning

Never start the engine or run the engine in a confined area. Exhaust fumes are poisonous and can cause loss of consciousness and death within a short period of time. Always operate your motorcycle in the open-air or in an area with adequate ventilation.

Caution

Running the engine with insufficient oil will cause engine damage. If the low oil pressure warning light remains on, stop the engine immediately and investigate the cause.

With the motorcycle upright and off the side stand, check to see if oil is visible in the sight glass at a point mid-way between the upper (maximum) and lower (minimum) horizontal lines marked on the crankcase.

If it is necessary to top up the oil level, remove the filler plug and add oil, a little at a time, until the level registered in the sight glass is correct. Refit and tighten the filler plug.

Note:

- **An accurate indication of the level of oil in the engine is only shown when the engine is at normal operating temperature and the motorcycle is upright (not on the side/centre stand).**

Start the engine and run at idle for approximately five minutes.

Stop the engine, then wait for at least three minutes for the oil to settle.

Note the oil level visible in the sight glass.

When correct, oil should be visible in the sight-glass at a point mid-way between the upper (maximum) and lower (minimum) horizontal lines marked on the crankcase.

If necessary, top up the oil level as described earlier.

Once the correct level is reached, fit and tighten the filler plug.

Oil and Oil Filter Change

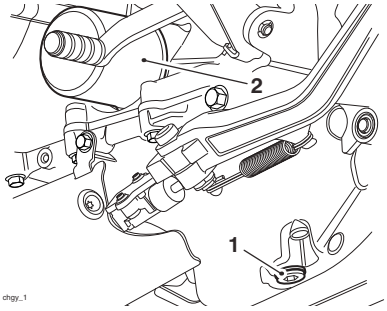

1. **Oil drain plug**
2. **Oil filter**

The engine oil and filter must be replaced in accordance with scheduled maintenance requirements.

Warning

Prolonged or repeated contact with engine oil can lead to skin dryness, irritation and dermatitis. In addition, used engine oil contains harmful contamination that can lead to skin cancer. Always wear suitable protective clothing and avoid skin contact with used oil.

Warm up the engine thoroughly, and then stop the engine and secure the motorcycle in an upright position on level ground.

Place an oil drain pan beneath the engine.

Remove the oil drain plug.

Warning

The oil may be hot to the touch. Avoid contact with the hot oil by wearing suitable protective clothing, gloves, eye protection, etc. Contact with hot oil may cause the skin to be scalded or burned.

Unscrew and remove the oil filter using Triumph service tool T3880313. Dispose of the old filter in an environmentally friendly way.

Apply a thin smear of clean engine oil to the sealing ring of the new oil filter. Fit the oil filter and tighten to **10 Nm**.

After the oil has completely drained out, fit a new sealing washer to the drain plug. Fit and tighten the plug to **25 Nm**.

Fill the engine with a 10W/40 or 10W/50 semi or fully synthetic motorcycle engine oil that meets specification API SH (or higher) **and** JASO MA, such as Castrol Power 1 Racing 4T 10W-40 (fully synthetic) engine oil, sold as Castrol Power RS Racing 4T 10W-40 (fully synthetic) in some countries.

Start the engine and allow it to idle for a minimum of 30 seconds.

Caution

Raising the engine speed above idle before the oil reaches all parts of the engine can cause engine damage or seizure. Only raise engine speed after running the engine for 30 seconds to allow the oil to circulate fully.

Caution

If the engine oil pressure is too low, the low oil pressure warning light will illuminate. If this light stays on when the engine is running, stop the engine immediately and investigate the cause. Running the engine with low oil pressure will cause engine damage.

Ensure that the low oil pressure warning light remains off after starting and the message WARNING - OIL PRESSURE LOW is not visible in the instrument's display screen.

Stop the engine and re-check the oil level. Adjust if necessary.

Disposal of Used Engine Oil and Oil Filters

To protect the environment, do not pour oil on the ground, down sewers or drains, or into watercourses. Do not place used oil filters in with general waste. If in doubt, contact your local authority.

Oil Specification and Grade

Triumph high performance fuel injected engines are designed to use 10W/40 or 15W/50 semi or fully synthetic motorcycle engine oil that meets specification API SH (or higher) and JASO MA, such as Castrol Power 1 Racing 4T 10W-40 (fully synthetic) engine oil, sold as Castrol Power RS Racing 4T 10W-40 (fully synthetic) in some countries.

Triumph recommends the fully synthetic 10W/40 motorcycle engine oil for most conditions. The oil viscosity may need to be changed to accommodate the ambient temperatures in your riding area.

Refer to the chart below for the correct oil viscosity (10W/40 of 10W/50) to be used in your riding area.

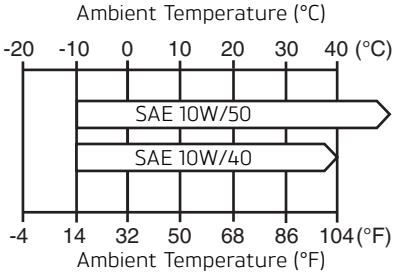

Oil Viscosity Temperature Range

Do not add any chemical additives to the engine oil. The engine oil also lubricates the clutch and any additives could cause the clutch to slip.

Do not use mineral, vegetable, non-detergent oil, castor based oils or any oil not conforming to the required specification. The use of these oils may cause instant, severe engine damage.

Cooling System

cbob

To ensure efficient engine cooling, check the coolant level each day before riding the motorcycle, and top up the coolant if the level is low.

Note:

- **A year-round, Hybrid Organic Acid Technology (known as Hybrid OAT or HOAT) coolant is installed in the cooling system when the motorcycle leaves the factory. It is coloured green, contains a 50% solution of ethylene glycol based antifreeze, and has a freezing point of -35°C (-31°F).**

Corrosion Inhibitors

To protect the cooling system from corrosion, the use of corrosion inhibitor chemicals in the coolant is essential.

If coolant containing a corrosion inhibitor is not used, the cooling system will accumulate rust and scale in the water jacket and radiator. This will block the coolant passages, and considerably reduce the efficiency of the cooling system.

Warning

HD4X Hybrid OAT coolant contains corrosion inhibitors and anti-freeze suitable for aluminium engines and radiators. Always use the coolant in accordance with the instructions of the manufacturer.

Coolant that contains anti-freeze and corrosion inhibitors contains toxic chemicals that are harmful to the human body. Never swallow anti-freeze or any of the motorcycle coolant.

Note:

- **HD4X Hybrid OAT coolant, as supplied by Triumph, is pre-mixed and does not need to be diluted prior to filling or topping up the cooling system.**

Coolant Level Inspection

Note:

- **The coolant level should be checked when the engine is cold (at room or ambient temperature).**

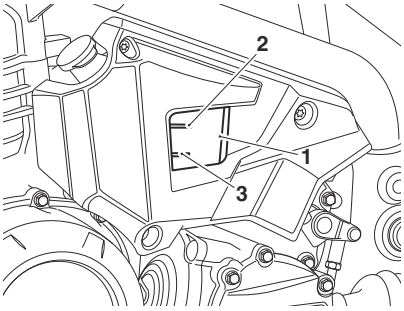

1. **Expansion tank**
2. **MAX mark**
3. **MIN mark**

Position the motorcycle on level ground and in an upright position. The expansion tank can be viewed from the left hand side of the motorcycle.

Check the coolant level in the expansion tank. The coolant level must be between the MAX and MIN marks. If the coolant is below the minimum level, the coolant level must be adjusted.

Coolant Level Adjustment

Warning

Do not remove the radiator pressure cap when the engine is hot. When the engine is hot, the coolant inside the radiator will be hot and also under pressure. Contact with this hot, pressurised coolant will cause scalds and skin damage.

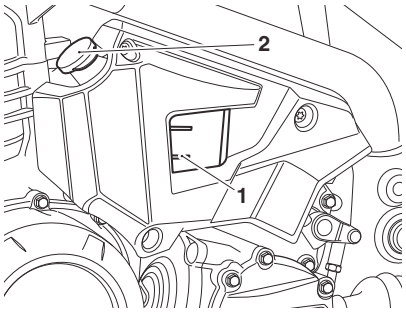

1. **Expansion tank**
2. **Expansion tank cap**

Allow the engine to cool.

The expansion tank cap can be removed from the left hand side of the motorcycle.

Remove the cap from the expansion tank and add coolant mixture through the filler opening until the level reaches the MAX mark. Refit the cap.

Note:

- **If the coolant level is being checked because the coolant has overheated, also check the level in the radiator and top up if necessary.**
- **In an emergency, distilled water can be added to the cooling system. However, the coolant must then be drained and replenished with HD4X Hybrid OAT coolant as soon as possible.**

Caution

If hard water is used in the cooling system, it will cause scale accumulation in the engine and radiator and considerably reduce the efficiency of the cooling system. Reduced cooling system efficiency may cause the engine to overheat and suffer severe damage.

Coolant Change

Have the coolant changed by an authorised Triumph dealer in accordance with scheduled maintenance requirements.

Radiator and Hoses

Check the radiator hoses for cracks or deterioration, and hose clips for tightness in accordance with scheduled maintenance requirements. Have your authorised Triumph dealer replace any defective items.

Check the radiator grille and fins for obstructions by insects, leaves or mud. Clean off any obstructions with a stream of low-pressure water.

Warning

The fan operates automatically when the engine is running. Always keep hands and clothing away from the fan as contact with the rotating fan can cause injury.

Caution

Using high-pressure water sprays, such as from a car wash facility or household pressure washer, can damage the radiator fins, cause leaks and impair the radiator's efficiency.

Do not obstruct or deflect airflow through the radiator by installing unauthorised accessories, either in front of the radiator or behind the cooling fan. Interference with the radiator airflow can cause overheating, potentially resulting in engine damage.

Warning

Always be alert for changes in the 'feel' of the throttle control and have the throttle system checked by an authorised Triumph dealer if any changes are detected. Changes can be due to wear in the mechanism, which could lead to a sticking throttle control.

A sticking or stuck throttle control will lead to loss of motorcycle control and an accident.

Inspection

Warning

Use of the motorcycle with a sticking or damaged throttle control will interfere with the throttle function resulting in loss of motorcycle control and an accident.

To avoid continued use of a sticking or damaged throttle control, always have it checked by your authorised Triumph dealer.

Check that the throttle opens smoothly, without undue force and that it closes without sticking. Have your authorised Triumph dealer check the throttle system if a problem is detected or any doubt exists.

Check that there is 1 - 2 mm of throttle grip free play when lightly turning the throttle grip back and forth.

If there is an incorrect amount of free play, Triumph recommends that you have your authorised Triumph dealer investigate.

Clutch

The motorcycle is equipped with a hydraulically operated clutch that does not require adjustment.

Clutch Fluid Level Inspection and Adjustment

Warning

Use only DOT 4 specification brake and clutch fluid as listed in the specification section of this handbook. The use of brake and clutch fluids other than those DOT 4 fluids listed in the specification section may reduce the efficiency of the clutch system leading to an accident.

Failure to change the brake and clutch fluid at the interval specified in the scheduled maintenance chart may reduce clutch efficiency resulting in an accident.

Inspect the level of brake and clutch fluid in the reservoir and change the fluid in accordance with the scheduled maintenance requirements. Use only DOT 4 fluid as recommended in the specification section. The brake and clutch fluid must also be changed if it becomes, or is suspected of having become contaminated with moisture or any other contaminants.

The brake and clutch fluid in the reservoir must be kept between the upper and lower level lines (reservoir held horizontal).

Release the fixings securing the clutch reservoir cover, then remove the cover noting the position of the diaphragm seal.

Fill the reservoir to the upper level line using new DOT 4 fluid from a sealed container.

Refit the reservoir cover ensuring that the diaphragm seal is correctly fitted. Tighten the fixings to **1.5 Nm**.

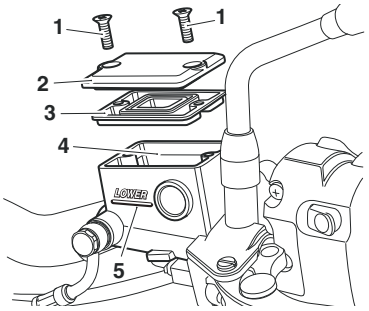

1. **Fixings**
2. **Cover**
3. **Diaphragm seal**
4. **Upper level line**
5. **Lower level line**

Final Drive Unit

Other than checking the final drive oil level, the unit contains no user serviceable parts. If a fault occurs with the final drive unit, your Triumph dealer must replace the complete assembly.

Check the final drive unit for oil leaks in accordance with the scheduled maintenance chart.

Final Drive Oil Level Adjustment

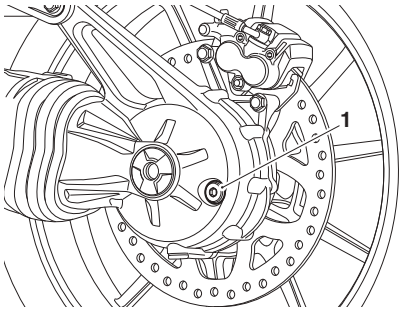

1. Filler level plug

To check the oil level in the final drive unit, remove the filler level plug. Fill with 75W/90 fully synthetic hypoid oil that meets specification API Service Level GL5, such as Castrol SAF-XO fully synthetic hypoid oil, until the level of oil inside the unit is level with the bottom of the filler. Refit the plug and tighten to **25 Nm**.

Warning

Under no circumstances should the final drive unit be disassembled. Failure to observe the above warning could lead to a malfunction of the final drive unit causing lock-up of the rear wheel leading to loss of motorcycle control and an accident.

Brakes

Brake Wear Inspection

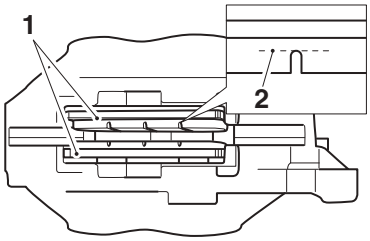

cbmz_2

1. Brake pads
2. Minimum thickness line

Brake pads must be inspected in accordance with scheduled requirements and replaced if worn to, or beyond the minimum service thickness.

If the lining thickness of any pad (front or rear brakes) is less than 1.5 mm (0.06 in), that is, if the pad has worn down to the bottom of the grooves, replace all the pads on the wheel.

Breaking-in New Brake Discs and Pads

Triumph recommend a period of careful breaking-in for new brake discs and pads that, if followed correctly, will optimise their performance and longevity.

The recommended distance for breaking-in new brake discs and pads is 200 miles (300 km).

During the breaking-in period, avoid extreme braking, ride with caution and allow for greater braking distances.

Warning

Brake pads must always be replaced as a wheel set. At the front, where two calipers are fitted on the same wheel, replace all the brake pads in both calipers.

Replacing individual pads will reduce braking efficiency and may cause an accident.

After replacement brake pads have been fitted, ride with extreme caution until the new pads have broken in.

Warning

Brake pad wear will be increased if the motorcycle is used frequently off-road. Always inspect the brake pads more frequently if the motorcycle is used off-road, and replace the brake pads before they become worn to, or beyond the minimum service thickness.

Riding with worn brake pads may reduce braking efficiency, leading to loss of motorcycle control and an accident.

Brake Pad Wear Compensation

Disc and brake pad wear is automatically compensated for and has no effect on the brake lever or pedal action. There are no parts that require adjustment on the front and rear brakes.

Warning

If the brake lever or pedal feels soft when it is applied, or if the lever/pedal travel becomes excessive, there may be air in the brake pipes and hoses or the brakes may be defective.

It is dangerous to operate the motorcycle under such conditions and your authorised Triumph dealer must rectify the fault before riding.

Riding with defective brakes may lead to loss of motorcycle control and an accident.

Disc Brake Fluid

Inspect the level of brake fluid in both reservoirs and change the brake fluid in accordance with scheduled maintenance requirements. Use only DOT 4 fluid as recommended in the Specification section. The brake fluid must also be changed if it becomes, or is suspected of having become contaminated with moisture or any other contaminants.

Warning

Brake fluid is hygroscopic which means it will absorb moisture from the air.

Any absorbed moisture will greatly reduce the boiling point of the brake fluid causing a reduction in braking efficiency.

Because of this, always replace brake fluid in accordance with scheduled maintenance requirements.

Always use new brake fluid from a sealed container and never use fluid from an unsealed container or from one which has been previously opened.

Do not mix different brands or grades of brake fluid.

Check for fluid leakage around brake fittings, seals and joints and also check the brake hoses for splits, deterioration and damage.

Always rectify any faults before riding.

Failure to observe and act upon any of these items may cause a dangerous riding condition leading to loss of motorcycle control and an accident.

Front Brake Fluid Level Inspection and Adjustment

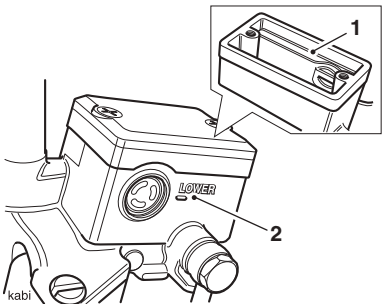

1. **Upper level line**
2. **Lower level line**

The brake fluid level in the reservoirs must be kept between the upper and lower level lines (reservoir held horizontal).

To inspect the fluid level, check the level of fluid visible in the window at the front of the reservoir body.

To adjust the fluid level, release the cap screws and remove the reservoir cap and the diaphragm seal.

Fill the reservoir to the upper level line using new DOT 4 fluid from a sealed container.

Refit the cover, ensuring that the diaphragm seal is correctly positioned between the cap and reservoir body. Tighten the cap retaining screws to **1.5 Nm**.

Rear Brake Fluid Inspection and Adjustment

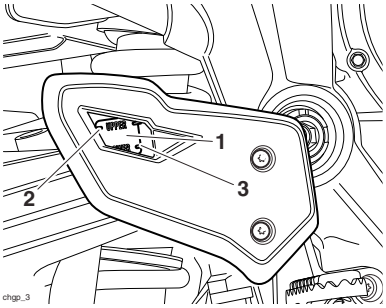

1. **Rear brake fluid reservoir**
2. **Upper level line**
3. **Lower level line**

To inspect the fluid level:

The reservoir is visible from the right hand side of the motorcycle, through a viewing window in the rider's heel guard.

To adjust the fluid level release the screws and remove the heel guard.

Release the cap screws and remove the reservoir cap and the diaphragm seal.

Fill the reservoir to the upper level line using new DOT 4 fluid from a sealed container.

Refit the cover, ensuring that the diaphragm seal is correctly positioned between the cap and reservoir body. Tighten the cap retaining screws to **1.5 Nm**.

Refit the heel guard and tighten its fixings to **7 Nm**.

Warning

If there has been an appreciable drop in the level of the fluid in either fluid reservoir, consult your authorised Triumph dealer for advice before riding. Riding with depleted brake fluid levels, or with a brake fluid leak is dangerous and will cause reduced brake performance potentially leading to loss of motorcycle control and an accident.

Brake Light

The brake light is activated independently by either the front or rear brake. If, with the ignition in the ON position, the brake light does not work when the front brake lever is pulled or the rear brake pedal is pressed, have your authorised Triumph dealer investigate and rectify the fault.

Warning

Riding the motorcycle with defective brake lights is illegal and dangerous.

An accident causing injury to the rider and other road users may result from use of a motorcycle with defective brake lights.

Steering/Wheel Bearings

Caution

To prevent risk of injury from the motorcycle falling during the inspection, ensure that the motorcycle is stabilised and secured on a suitable support. Do not exert extreme force against each wheel or rock each wheel vigorously as this may cause the motorcycle to become unstable and cause injury by falling from its support.

Ensure that the position of the support block will not cause damage to the sump.

Steering Inspection

Lubricate and inspect the condition of the steering (headstock) bearings in accordance with scheduled maintenance requirements.

Note:

- **Always inspect the wheel bearings at the same time as the steering bearings.**

Inspecting the Steering (Headstock) Bearings for Free Play

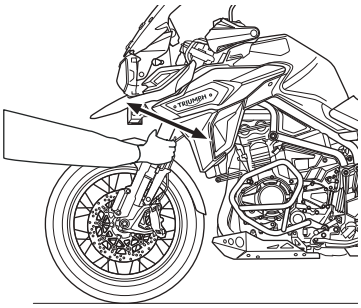

Inspecting the Steering for Free Play

Inspection

Position the motorcycle on level ground, in an upright position.

Raise the front wheel above the ground and support the motorcycle.

Standing at the front of the motorcycle, hold the lower end of the outer tube of the front forks as illustrated above and 'rock' with a front-to-rear motion.

If any free play can be detected in the steering (headstock) bearings, ask your authorised Triumph dealer to inspect and rectify any faults before riding.

Warning

Riding the motorcycle with incorrectly adjusted or defective steering (headstock) bearings is dangerous and may cause loss of motorcycle control and an accident.

Remove the support and place the motorcycle on the side stand.

Wheel Bearings Inspection

If the wheel bearings in the front or rear wheel allow play in the wheel hub, are noisy, or if the wheel does not turn smoothly, have your authorised Triumph dealer inspect the wheel bearings.

The wheel bearings must be inspected at the intervals specified in the scheduled maintenance chart.

Position the motorcycle on level ground, in an upright position.

Raise the front wheel above the ground and support the motorcycle.

Standing at the side of the motorcycle, gently rock the top of the front wheel from side to side.

If any free play can be detected, ask your authorised Triumph dealer to inspect and rectify any faults before riding.

Reposition the lifting device and repeat the procedure for the rear wheel.

Warning

Operation with worn or damaged front or rear wheel bearings is dangerous and may cause impaired handling and instability leading to an accident. If in doubt, have the motorcycle inspected by an authorised Triumph dealer before riding.

Remove the support and place the motorcycle on the side stand.

Front Suspension

Front Fork Inspection

Examine each fork for any sign of damage, scratching of the slider surface, or for oil leaks.

If any damage or leakage is found, consult an authorised Triumph dealer.

To check that the forks operate smoothly:

- Position the motorcycle on level ground.
- While holding the handlebars and applying the front brake, pump the forks up and down several times.
- If roughness or excessive stiffness is detected, consult your authorised Triumph dealer.

Warning

Riding the motorcycle with defective or damaged suspension is dangerous and may lead to loss of motorcycle control and an accident.

Warning

Never attempt to dismantle any part of the suspension units, as all units contain pressurised oil. Skin and eye damage can result from contact with the pressurised oil.

Front Suspension Adjustment

The following Explorer models are equipped with Triumph Semi Active Suspension (TSAS):

- Explorer XRx
- Explorer XRx-LRH
- Explorer XRT
- Explorer XCx
- Explorer XCx-LRH
- Explorer XCA.

See page 80 for more details on TSAS settings and adjustment.

Explorer XR and Explorer XC Models

Warning

Ensure that the correct balance between front and rear suspension is maintained. Suspension imbalance could significantly change handling characteristics leading to loss of motorcycle control and an accident. Refer to the front and rear suspension setting charts for further information or consult your dealer.

The front forks on the Explorer XR and Explorer XC models are adjustable for compression damping and rebound damping.

Note:

- **The motorcycle is delivered from the factory with the front suspension set at the Solo (Normal) riding settings, as shown in the Front Suspension Setting Chart (see page 152).**

Compression Damping Adjustment

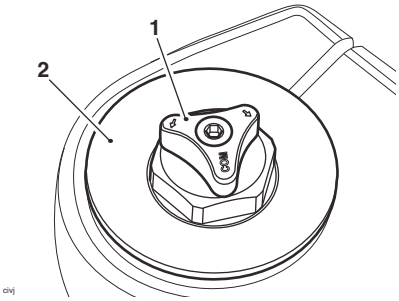

1. **Compression damping adjuster (white)**
2. **Fork top cap**

The compression damping adjuster is located at the top of the left hand fork.

To change the compression damping force rotate the (white) adjuster clockwise to increase, or anticlockwise to decrease.

Note:

- **The setting is measured as the number of adjuster clicks anticlockwise from the fully clockwise (closed) position.**

Rebound Damping Adjustment

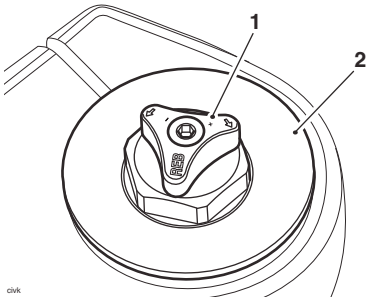

1. **Rebound Damping Adjuster (Red)**
2. **Fork top cap**

The rebound damping adjuster is located at the top of the right hand fork.

To change the rebound damping force, rotate the (red) adjuster clockwise to increase, or anticlockwise to decrease.

Note:

- **The setting is measured as the number of adjuster clicks anticlockwise from the fully clockwise (closed) position.**

Front Suspension Setting Chart

The Solo (Normal) suspension settings provide a comfortable ride and good handling characteristics for general, solo riding. The following chart shows suggested settings for the front suspension.

Loading	Compression Damping[1] (left hand fork)	Rebound Damping[1] (right hand fork)
Solo (Normal)	17	17
Solo (Comfort)	25	25
Solo (Sport)	4	4
Solo (Off-Road)	25	25
Solo (with Loaded Luggage Items)	13	13
Rider and Passenger	12	12
Rider and Passenger (with Loaded Luggage Items)	11	11
[1] Number of **clicks** anticlockwise from the fully clockwise (closed) position noting that the first stop (click) is counted as 1.		

Note:

- **This chart is only a guide. Setting requirements may vary for rider weight and personal preferences. See the following pages for information regarding suspension adjustment.**

Rear Suspension

Rear Suspension Adjustment

The following Explorer models are equipped with Triumph Semi Active Suspension (TSAS):

- Explorer XRx
- Explorer XRx-LRH
- Explorer XRT
- Explorer XCx
- Explorer XCx-LRH
- Explorer XCA.

See page 80 for more details on TSAS settings and adjustment.

Explorer XR and Explorer XC Models

Warning

Ensure that the correct balance between front and rear suspension is maintained. Suspension imbalance could significantly change handling characteristics leading to loss of motorcycle control and an accident. Refer to the front and rear suspension setting charts for further information or consult your dealer.

The Rear Suspension Unit (RSU) on the Explorer XR and Explorer XC models is adjustable for spring preload and rebound damping.

Note:

- **The motorcycle is delivered from the factory with the rear suspension set to the Solo (Normal) riding settings, as shown in the Rear Suspension Setting Chart (see page 154).**

Spring Pre-Load Adjustment

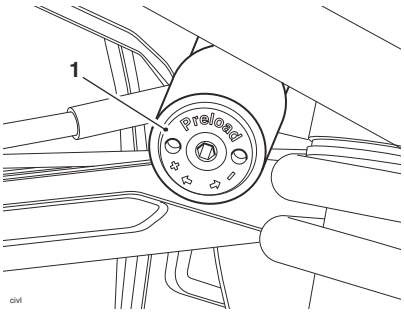

1. Spring pre-load adjuster

The spring pre-load adjuster is situated on the right hand side of the motorcycle, at the top of the rear suspension unit.

To adjust the spring preload setting rotate the 5 mm hexagon adjuster clockwise to increase, or anticlockwise to decrease.

Note:

- **The setting is measured as the number of adjuster turns anticlockwise from the fully clockwise (closed) position.**

Rebound Damping Adjustment

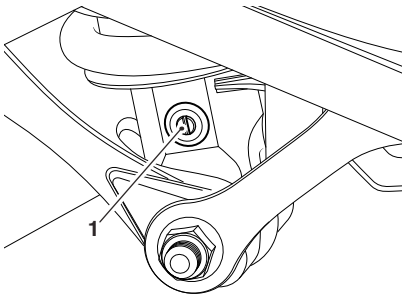

1. Rebound damping adjuster

The rebound damping adjuster is located at the bottom of the rear suspension unit and is accessible from left hand side of the motorcycle.

To adjust the rebound damping setting, rotate the slotted adjuster clockwise to increase, and anticlockwise to decrease.

Note:

- **The setting is measured as the number of adjuster clicks anticlockwise from the fully clockwise (closed) position.**

Rear Suspension Setting Chart

The standard suspension settings provide a comfortable ride and good handling characteristics for general, solo riding. The following chart shows suggested settings for the rear suspension.

An increase in spring pre-load requires firmer damping, a reduction in spring pre-load requires softer damping.

The damping must be adjusted to the road conditions and the spring pre-load.

Loading	Spring Pre-Load[1]	Rebound Damping[2]
Solo (Normal)	17	8
Solo (Comfort)	17	12
Solo (Sport)	17	4
Solo (Off-Road)	17	4
Solo (With Loaded Luggage Items)	6	5
Rider and Passenger	0	4
Rider and Passenger (with Loaded Luggage Items)	0	3
[1] Number of **turns** anticlockwise from the fully clockwise (closed) position.		
[2] Number of **clicks** anticlockwise from the fully clockwise (closed) position noting that the first stop (click) is counted as 1.		

Note:

- **This chart is only a guide. Setting requirements may vary for rider weight and personal preferences. See the following pages for information regarding suspension adjustment.**

Tyres

cboa

This model is equipped with tubeless tyres, valves and wheel rims. Use only tyres marked TUBELESS and tubeless valves on rims marked SUITABLE FOR TUBELESS TYRES.

Warning

Do not install tube-type tyres on tubeless rims. The bead will not seat and the tyres could slip on the rims, causing rapid tyre deflation that may result in a loss of motorcycle control and an accident. Never install an inner tube inside a tubeless tyre. This will cause friction inside the tyre and the resulting heat build-up may cause the tube to burst resulting in rapid tyre deflation, loss of motorcycle control and an accident.

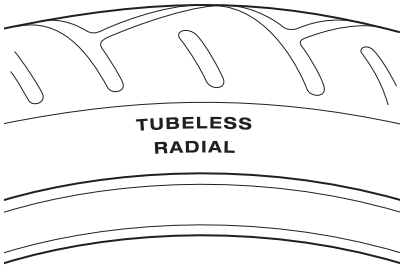

cthb_1

Typical Tyre Marking - Tubeless Tyre

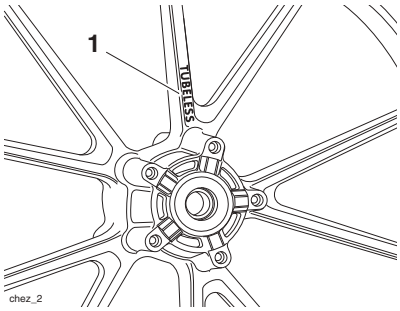

chez_2

Tubeless Wheel Marking - Cast Wheel

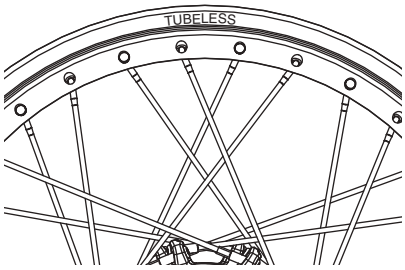

Tubeless Wheel Marking - Spoked Wheel

Tyre Inflation Pressures

Correct tyre inflation pressures will provide maximum stability, rider comfort and tyre life. Always check tyre pressures before riding when the tyres are cold. Check tyre pressures daily and adjust if necessary (see Specification section for correct inflation pressures). Alternatively, ask your authorised Triumph dealer to inspect your wheels and tyres.

Tyre Pressure Monitoring System (if fitted)

The tyre pressures shown on your instruments indicate the actual tyre pressure at the time of selecting the display. This may differ from the inflation pressure set when the tyres are cold because tyres become warmer during riding, causing the air in the tyre to expand and increase the inflation pressure. The cold inflation pressures specified by Triumph take account of this.

Owners must only adjust tyre pressures when the tyres are cold using an accurate pressure gauge, and must not use the tyre pressure display on the instruments.

Warning

Incorrect tyre inflation will cause abnormal tread wear and instability problems which may lead to loss of motorcycle control and an accident.

Under-inflation may result in the tyre slipping on, or coming off the rim. Over-inflation will cause instability and accelerated tread wear.

Both conditions are dangerous as they may cause loss of motorcycle control and an accident.

Warning

Tyre pressures which have been reduced for off-road riding will impair on-road stability. Always ensure the tyre pressure are set as described in the Specification section for on-road use.

Operation of the motorcycle with incorrect tyre pressures may cause loss of motorcycle control and an accident.

Tyre Wear

As the tyre tread wears down, the tyre becomes more susceptible to punctures. It is estimated that 90% of all tyre problems occur during the last 10% of tread life (90% worn). It is therefore not recommended to use tyres until they are worn to their minimum.

Minimum Recommended Tread Depth

In accordance with the periodic maintenance chart, measure the depth of the tread with a depth gauge, and replace any tyre that has worn to, or beyond, the minimum allowable tread depth specified in the table below:

Under 80 mph (130 km/h)	2 mm (0.08 in)
Over 80 mph (130 km/h)	Rear 3 mm (0.12 in) Front 2 mm (0.08 in)

Warning

This motorcycle must not be operated above the legal road speed limit except in authorised closed-course conditions.

Warning

Only operate this Triumph motorcycle at high speed in closed-course, on-road competition or on closed-course racetracks. High-speed operation should only then be attempted by riders who have been instructed in the techniques necessary for high-speed riding and are familiar with the motorcycle's characteristics in all conditions. High-speed operation in any other circumstances is dangerous and will lead to loss of motorcycle control and an accident.

Warning

Operation with excessively worn tyres is hazardous and will adversely affect traction, stability and handling which may lead to loss of motorcycle control and an accident.

When tyres become punctured, leakage is often very slow. Always inspect tyres very closely for punctures. Check the tyres for cuts, embedded nails or other sharp objects. Operation with punctured or damaged tyres will adversely affect stability and handling which may lead to loss of motorcycle control and an accident.

Check the rims for dents or deformation and spokes for looseness and damage. Operation with damaged or defective wheels, spokes or tyres is dangerous and loss of motorcycle control and an accident could result.

Always consult your authorised Triumph dealer for tyre replacement, or for a safety inspection of the wheels, spokes and tyres.

Tyre Replacement

All Triumph motorcycles are carefully and extensively tested in a range of riding conditions to ensure that the most effective tyre combinations are approved for use on this model. It is essential that approved tyres, fitted in approved combinations, are used when purchasing replacement tyres. The use of non-approved tyres, or approved tyres in non-approved combinations, may lead to motorcycle instability and an accident. On models fitted with ABS, different wheel speeds, caused by non-approved tyres can affect the function of the ABS computer.

See the Specification section for details of approved tyre combinations. Always have tyres fitted and balanced by your authorised Triumph dealer who has the necessary training and skills to ensure safe, effective fitment.

Tyre Pressure Monitoring System (Only on models fitted with TPMS)

Caution

An adhesive label is fitted to the wheel rim to indicate the position of the tyre pressure sensor. Care must be taken when replacing the tyres to prevent any damage to the tyre pressure sensors. Always have your tyres fitted by your authorised Triumph dealer and inform them that tyre pressure sensors are fitted to the wheels.

Caution

Do not use anti puncture fluid or any other item likely to obstruct air flow to the TPMS sensor's orifices. Any blockage to the air pressure orifice of the TPMS sensor during operation will cause the sensor to become blocked, causing irreparable damage to the TPMS sensor assembly. Damage caused by the use of anti puncture fluid or incorrect maintenance is not considered a manufacturing defect and will not be covered under warranty. Always have your tyres fitted by your authorised Triumph dealer and inform them that tyre pressure sensors are fitted to the wheels.

Warning

Use of non-recommended tyres can affect wheel speed and cause the Triumph traction control function not to operate, potentially leading to loss of motorcycle control and an accident in conditions where the Triumph traction control would normally function.

Warning

The ABS computer operates by comparing the relative speed of the front and rear wheels. Use of non-recommended tyres can affect wheel speed and cause the ABS function not to operate, potentially leading to loss of motorcycle control and an accident in conditions where the ABS would normally function.

Warning

If a tyre sustains a puncture, the tyre must be replaced. Failure to replace a punctured tyre, or operation with a repaired tyre can lead to instability, loss of motorcycle control and an accident.

Warning

Do not install tube-type tyres on tubeless rims. The bead will not seat and the tyres could slip on the rims, causing rapid tyre deflation that may result in a loss of vehicle control and an accident. Never install an inner tube inside a tubeless tyre. This will cause friction inside the tyre and the resulting heat build-up may cause the tube to burst resulting in rapid tyre deflation, loss of motorcycle control and an accident.

Warning

If tyre damage is suspected, such as after striking the kerb, ask your authorised Triumph dealer to inspect the tyre both internally and externally. Remember, tyre damage may not always be visible from the outside. Operation of the motorcycle with damaged tyres could lead to loss of motorcycle control and an accident.

Warning

When replacement tyres are required, consult your authorised Triumph dealer who will arrange for the tyres to be selected, in a correct combination, from the approved list and fitted according to the tyre manufacturer's instructions.

When tyres are replaced, allow time for the tyres to seat to the rim (approximately 24 hours). During this seating period, ride cautiously as an incorrectly seated tyre could cause instability, loss of motorcycle control and an accident.

Initially, the new tyres will not produce the same handling characteristics as the worn tyres and the rider must allow adequate riding distance (approximately 100 miles) to become accustomed to the new handling characteristics.

24 hours after fitting, the tyre pressures must be checked and adjusted, and the tyres examined for correct seating. Rectification must be carried out as necessary.

The same checks and adjustments must also be carried out when 100 miles have been travelled after fitting.

Use of a motorcycle with incorrectly seated tyres, incorrectly adjusted tyre pressures, or when not accustomed to its handling characteristics may lead to loss of motorcycle control and an accident.

Warning

Tyres that have been used on a rolling road dynamometer may become damaged. In some cases, the damage may not be visible on the external surface of the tyre.

Tyres must be replaced after such use as continued use of a damaged tyre may lead to instability, loss of motorcycle control and an accident.

Warning

Use of a motorcycle with incorrectly seated tyres, incorrectly adjusted tyre pressures, or when not accustomed to its handling characteristics may lead to loss of motorcycle control and an accident.

Warning

Accurate wheel balance is necessary for safe, stable handling of the motorcycle. Do not remove or change any wheel balance weights. Incorrect wheel balance may cause instability leading to loss of motorcycle control and an accident.

When wheel balancing is required, such as after tyre replacement, see your authorised Triumph dealer.

Only use self-adhesive weights. Clip-on weights may damage the wheel and tyre resulting in tyre deflation, loss of motorcycle control and an accident.

Battery

Warning

Under some circumstances, the battery can give off explosive gases; keep sparks, flames and cigarettes away. Provide adequate ventilation when charging or using the battery in an enclosed space.

The battery contains sulphuric acid (battery acid). Contact with skin or eyes may cause severe burns. Wear protective clothing and a face shield.

If battery acid gets on your skin, flush with water immediately.

If battery acid gets in your eyes, flush with water for at least 15 minutes and SEEK MEDICAL ATTENTION IMMEDIATELY.

If battery acid is swallowed, drink large quantities of water and SEEK MEDICAL ATTENTION IMMEDIATELY.

KEEP BATTERY ACID OUT OF THE REACH OF CHILDREN.

Warning

The battery contains harmful materials. Always keep children away from the battery whether or not it is fitted in the motorcycle.

Do not attach jump leads to the battery, touch the battery cables together or reverse the polarity of the cables as any of these actions may cause a spark which would ignite battery gases causing a risk of personal injury.

Battery Removal

Remove the rider's seat.

Remove the wing nut and remove the chassis ECM cover.

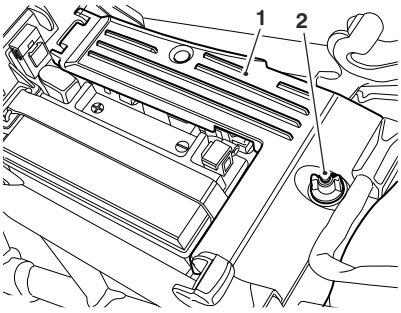

1. **Chassis ECM cover**
2. **Wing nut**

Remove the battery strap.

Disconnect the battery leads, negative (black) lead first.

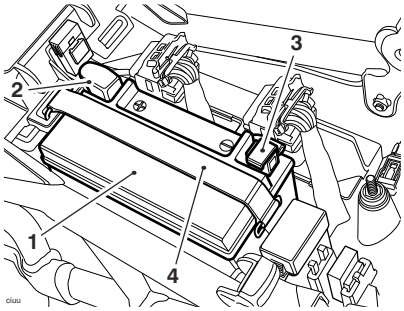

1. **Battery**
2. **Positive (red) terminal**
3. **Negative (black) terminal**
4. **Battery strap**

Take the battery out of the case.

Warning

Ensure that the battery terminals do not touch the motorcycle frame as this may cause a short circuit or spark, which would ignite battery gases causing a risk of personal injury.

Battery Disposal

Should the battery ever require replacement, the original battery must be handed to a recycling agent who will ensure that the dangerous substances from which the battery is manufactured do not pollute the environment.

Battery Maintenance

Clean the battery using a clean, dry cloth. Be sure that the cable connections are clean.

Warning

The battery acid is corrosive and poisonous and will cause damage to unprotected skin. Never swallow battery acid or allow it to come into contact with the skin. To prevent injury, always wear eye and skin protection when handling the battery.

The battery is a sealed type and does not require any maintenance other than checking the Voltage and routine recharging when required, such as during storage.

It is not possible to adjust the battery acid level in the battery; the sealing strip must not be removed.

Battery Discharge

Caution

The charge level in the battery must be maintained to maximise battery life.

Failure to maintain the battery charge level could cause serious internal damage to the battery.

Under normal conditions, the motorcycle charging system will keep the battery fully charged. However, if the motorcycle is unused, the battery will gradually discharge due to a normal process called self discharge; the clock, engine control module (ECM) memory, high ambient temperatures, or the addition of electrical security systems or other electrical accessories will all increase this rate of battery discharge. Disconnecting the battery from the motorcycle during storage will reduce the rate of discharge.

Battery Maintenance During Storage and Infrequent Use of the Motorcycle

During storage or infrequent use of the motorcycle, inspect the battery Voltage weekly using a digital multimeter. Follow the manufacturer's instructions supplied with the meter.

Should the battery Voltage fall below 12.7 Volts, the battery should be charged (see page 163).

Allowing a battery to discharge or leaving it discharged for even a short period of time causes sulphation of the lead plates. Sulphation is a normal part of the chemical reaction inside the battery, however over time the sulphate can crystallise on the plates making recovery difficult or impossible. This permanent damage is not covered by the motorcycle warranty, as it is not due to a manufacturing defect.

Keeping the battery fully charged reduces the likelihood of it freezing in cold conditions. Allowing a battery to freeze will cause serious internal damage to the battery.

Battery Charging

For help with selecting a battery charger, checking the battery Voltage or battery charging, contact your local authorised Triumph dealer.

Warning

The battery gives off explosive gases; keep sparks, flames and cigarettes away. Provide adequate ventilation when charging or using the battery in an enclosed space.

The battery contains sulphuric acid (battery acid). Contact with skin or eyes may cause severe burns. Wear protective clothing and a face shield.

If battery acid gets on your skin, flush with water immediately.

If battery acid gets in your eyes, flush with water for at least 15 minutes and SEEK MEDICAL ATTENTION IMMEDIATELY.

If battery acid is swallowed, drink large quantities of water and SEEK MEDICAL ATTENTION IMMEDIATELY.

KEEP BATTERY ACID OUT OF THE REACH OF CHILDREN.

Caution

Do not use an automotive quick charger as it may overcharge and may damage the battery and the alternator.

Should the battery Voltage fall below 12.7 Volts, the battery should be charged using a Triumph approved battery charger. Always follow the instructions supplied with the battery charger.

For extended periods of storage (beyond two weeks) the battery should be removed from the motorcycle and kept charged using a Triumph approved maintenance charger.

Similarly, should the battery charge fall to a level where it will not start the motorcycle, remove the battery from the motorcycle before charging.

Battery Installation

Warning

Ensure that the battery terminals do not touch the motorcycle frame as this may cause a short circuit or spark, which would ignite battery gases causing a risk of personal injury.

Place the battery in the battery case.

Reconnect the battery, positive (red) lead first.

Apply a light coat of grease to the terminals to prevent corrosion.

Cover the positive terminal with the protective cap.

Refit the battery strap.

Refit the chassis ECM cover and secure with the wing nut. Tighten the wing nut to **1.25 Nm**.

Refit the rider's seat.

Note:

- **After reconnecting the battery, it is necessary to:**
- **Allow the TSAS system (if equipped) to recalibrate as described on page 81.**

Fuse Boxes

Warning

Always replace blown fuses with new ones of the correct rating (as specified on the fuse box cover) and never use a fuse of higher rating. Use of an incorrect fuse could lead to an electrical problem, resulting in motorcycle damage, loss of motorcycle control and an accident.

Main fuse

The 40 Amp main fuse is located beneath the rider's seat and behind the seat bridge.

To allow access to the main fuse the rider's seat must be removed.

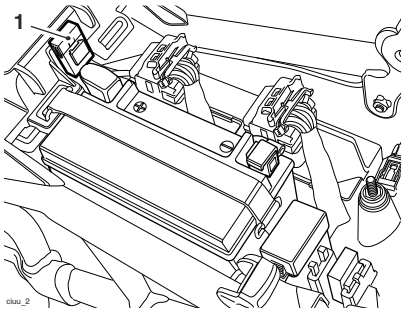

1. **Main fuse**

ABS Fuse Box

The 40 Amp ABS fuse is located beneath the rider's seat and behind the main fuse box.

To allow access to the ABS fuse box the rider's seat and chassis ECM cover must be removed.

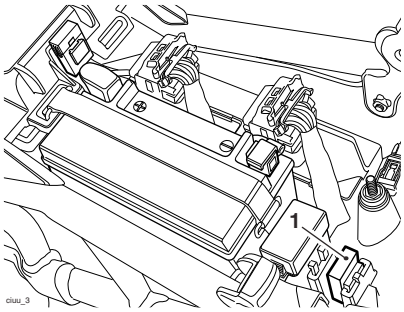

1. **ABS fuse box**

Main Fuse Box

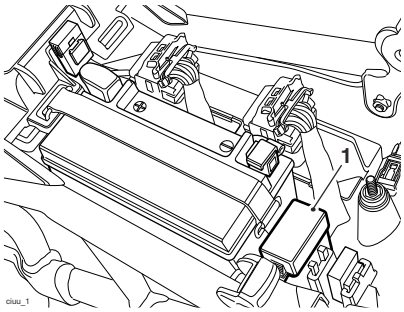

1. **Main fuse box**

The main fuse box is located beneath the rider's seat.

To allow access to the fuse box, the rider's seat and chassis ECM cover must be removed.

Fuse Identification

A blown fuse is indicated when all of the systems protected by that fuse become inoperative. When checking for a blown fuse, use the table to establish which fuse has blown.

The fuse identification numbers listed in the tables correspond with those printed on the fuse box cover, as shown below. Spare fuses are located on the inside of the fuse box cover and should be replaced if used.

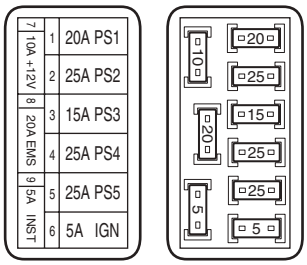

Fuse Box and Cover - Explorer XR and Explorer XC

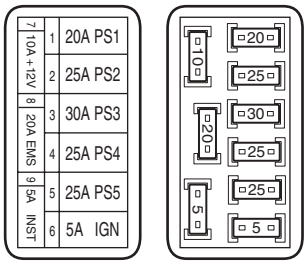

Fuse Box and Cover - All Models Except Explorer XR and Explorer XC

Note:

- **Refer to the table on page 167 for details of the systems protected by fuses PS1 to PS5.**

Circuit Protected	Position	Rating (Amps)
PS1	1	20
PS2	2	25
PS3	3	15/30†
PS4	4	25
PS5	5	25
Ignition	6	5
Front accessory socket	7	10
Engine Management	8	20
Instruments	9	5

†The rating of fuse PS3 varies between models as follows:

- 15 Amps - Explorer XR and Explorer XC only
- 30 Amps - All modes except Explorer XR and Explorer XC

Chassis Electronic Control Module (Chassis ECM)

Many of the motorcycle's electrical systems (such as lighting, TSAS if fitted, horn, cooling fan, fuel pump, and accessories such as heated grips or seats) are controlled by a Chassis Electronic Control Module (Chassis ECM).

The chassis ECM provides a primary level of protection to the electrical systems it controls. If a fault is detected, the chassis ECM will automatically cut power to the affected system.

The chassis ECM can be reset by turning the Ignition off then on again. Power will be restored to the inoperative system, providing that the condition that caused the fault has been rectified.

The systems controlled by the chassis ECM are also provided with a secondary level of protection, by fuses PS1 to PS5 in the main fuse box (see page 166). A blown fuse is likely when all of the systems protected by that fuse become inoperative.

Refer to the following table for full details of the chassis ECM controlled systems, and their corresponding fuses.

Electrical System	Fuse
Left headlight main beam	PS1
Left headlight dipped beam	
Left front direction indicator	
Left rear direction indicator	
Rear position light	
RSU position sensor (models with TSAS only)	
Right headlight main beam	PS2
Right headlight dipped beam	
Right front direction indicator	
Right rear direction indicator	
Front position light	
Brake light	

Electrical System	Fuse
Windscreen adjustment motor	PS3
RSU pre-load adjustment motor (models with TSAS only)	
RSU damping solenoid (models with TSAS only)	
Front suspension compression damping adjustment motor (models with TSAS only)	
Front suspension rebound damping adjustment motor (models with TSAS only)	
Fog lights (if fitted)	
USB connector	
Heated seats (if fitted)	PS4
Heated grips (if fitted)	
Rear electrical accessory socket (if fitted)	
Top box electrical accessory socket (if fitted)	
Cooling fan	PS5
Fuel pump	
Starter solenoid	
Horn	

Warning

Always replace blown fuses with new ones of the correct rating (as specified on the fuse box cover) and never use a fuse of higher rating. Use of an incorrect fuse could lead to an electrical problem, resulting in motorcycle damage, loss of motorcycle control and an accident.

If after resetting the automatic software protection system or replacing a blown fuse, a fault still persists, contact an authorised Triumph dealer as soon as possible to have the fault checked and rectified.

Headlights

Warning

Adjust road speed to suit the visibility and weather conditions in which the motorcycle is being operated.

Ensure that the beams are adjusted to illuminate the road surface sufficiently far ahead without dazzling oncoming traffic. An incorrectly adjusted headlight may impair visibility causing an accident.

Warning

Never attempt to adjust a headlight beam when the motorcycle is in motion.

Any attempt to adjust a headlight beam when the motorcycle is in motion may result in loss of motorcycle control and an accident.

Caution

Do not cover the headlight or lens with any item likely to obstruct air flow to, or prevent heat escaping from, the headlight lens.

Covering the headlight lens during operation with items of clothing, luggage, adhesive tape, devices intended to alter or adjust the headlight beam or non genuine headlight lens covers will cause the headlight lens to overheat and distort, causing irreparable damage to the headlight assembly.

Damage caused by overheating is not considered a manufacturing defect and will not be covered under warranty.

If the headlight must be covered during use – such as taping of the headlight lens required during closed-course conditions – the headlight must be disconnected.

Headlight Adjustment

Each headlight can be adjusted by means of vertical and horizontal adjustment screws located on the rear of each headlight. In addition, the headlight is equipped with an easily accessible adjuster to allow the vertical adjustment to be corrected when the motorcycle is fully loaded.

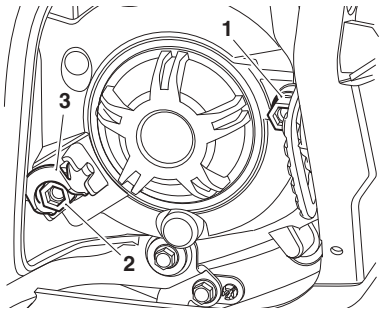

1. **Horizontal adjustment screw**
2. **Vertical adjustment screw**
3. **Headlight adjuster lever for loaded conditions**

Switch the headlight dipped beam on.

Turn the vertical adjustment screw on the headlight clockwise to raise the beam or anti-clockwise to lower the beam.

Turn the horizontal adjustment screw clockwise to move the beam to the right or anticlockwise to move the beam to the left.

Switch the headlights off when the beam settings are satisfactory.

Headlight Adjustment Lever for Loaded Conditions

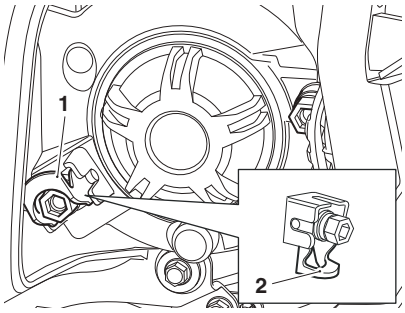

1. **Headlight adjuster lever (unloaded position)**
2. **Headlight adjuster lever (loaded position)**

For normal (unloaded) conditions the headlight adjuster lever should be set in the horizontal position (1).

For loaded conditions rotate the headlight adjuster downwards until it stops (2). This will lower the headlight beams by approximately 2°.

Bulb Replacement

Caution

The use of non-approved bulbs may result in damage to lenses and other lighting unit components.

In addition, the use of bulbs of incorrect wattage may cause the chassis ECM to cut power to affected lighting circuits.

Use genuine Triumph supplied bulbs as specified in the Triumph Parts Catalogue.

Always have replacement bulbs installed by an authorised Triumph dealer.

Headlights

It is not necessary to remove the headlight when bulb replacement becomes necessary.

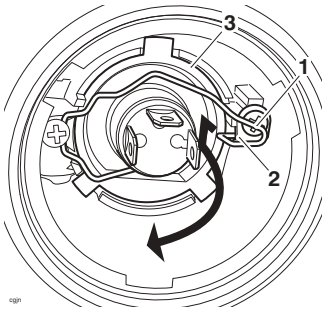

1. **Bulb retainer (right hand shown)**
2. **Bulb retainer hook**
3. **Bulb**

Warning

The bulbs become hot during use. Always allow sufficient time for the bulb to cool before handling. Avoid touching the glass part of the bulb. If the glass is touched or gets dirty, clean with alcohol before reuse.

To replace a bulb:

Remove the rider's seat.

Disconnect the battery, negative (black) lead first.

Remove the bulb cover from the bulb to be replaced by rotating it anticlockwise.

Disconnect the multiplug from the bulb.

Detach the bulb retainer from the hook on the headlight assembly and rotate it away from the bulb as shown.

Remove the bulb from the bulb retainer.

Installation is the reverse of the removal procedure.

Position Light

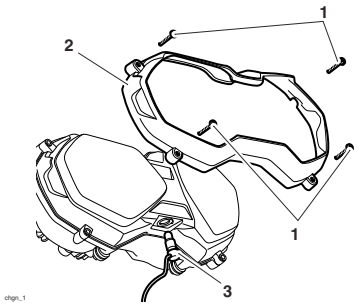

1. **Fixings**
2. **Headlight surround**
3. **Position light bulb**

The position lamp is fitted to the centre of the headlight. To replace the bulb, remove the four fixings and remove the headlight surround, detach the rubber retainer from the headlight and pull out the bulb.

Installation is the reverse of the removal procedure.

Front Fog Lights (if fitted)

The fog light units are sealed, maintenance-free LED units.

Rear Light/Licence Plate Light

The rear light unit is a sealed, maintenance-free LED unit. The licence plate light is integral to the rear light unit.

Direction Indicator Lights

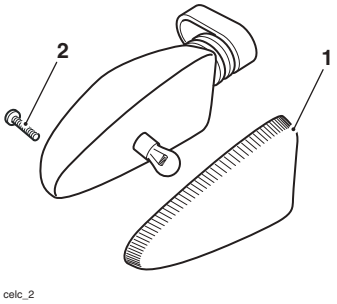

1. **Indicator lens**
2. **Securing screw**

The lens on each indicator light is held in place by a securing screw located in the lens of the light.

Release the screw and remove the lens to gain access to the bulb for replacement.

LED Direction Indicator Lights

The LED direction indicator light units are sealed, maintenance free LED units.

Cleaning

Frequent, regular cleaning is an essential part of the maintenance of your motorcycle. If regularly cleaned, the appearance will be preserved for many years. Cleaning with cold water containing an automotive cleaner is essential at all times but particularly so after exposure to sea breezes, sea water, dusty or muddy roads and in winter when roads are treated for ice and snow. Do not use household detergent, as the use of such products will lead to premature corrosion.

Although, under the terms of your motorcycle warranty, cover is provided against the corrosion of certain items, the owner is expected to observe this reasonable advice which will safeguard against corrosion and enhance the appearance of the motorcycle.

Care of Matt Paintwork

Matt paintwork requires no greater care than that already recommended for high gloss paintwork.

- Do not use any polish or wax on components.
- Do not try and polish out scratches.

Preparation for Washing

Before washing, precautions must be taken to keep water off the following places.

Rear opening of the exhausts: Cover with a plastic bag secured with rubber bands.

Clutch and brake levers, switch housings on the handlebar: Cover with plastic bags.

Ignition switch and seat lock: Cover the keyhole with tape.

Remove any items of jewellery such as rings, watches, zips or belt buckles, which may scratch or otherwise damage painted or polished surfaces.

Use separate cleaning sponges or cleaning cloths for washing painted/polished surfaces and chassis areas. Chassis areas (such as wheels and under mudguards) will be exposed to more abrasive road grime and dust, which may then scratch painted or polished surfaces, if the same sponge or cleaning cloths are used.

Where to be Careful

Avoid spraying water with any great force near the following places:

- Instruments
- Brake cylinders and brake calipers
- Under the fuel tank
- Headstock bearings.

Caution

Any water sprayed around the air intake duct could enter the airbox and engine, causing damage to both items.

Caution

Use of high-pressure spray washers is not recommended. When using pressure washers, water may be forced into bearings and other components causing premature wear from corrosion and loss of lubrication.

Note:

- **Use of soaps that are highly alkaline will leave a residue on painted surfaces, and may also cause water spotting. Always use a low alkaline soap to aid the cleaning process.**

After Washing

Remove the plastic bags and tape, and clear the air intakes.

Lubricate the pivots, bolts and nuts.

Test the brakes before motorcycle operation.

Start the engine and run it for 5 minutes. Ensure adequate ventilation for the exhaust fumes.

Use a dry cloth to absorb water residue. Do not allow water to stand on the machine as this will lead to corrosion.

Warning

Never wax or lubricate the brake discs. Loss of braking power and an accident could result. Clean the disc with a proprietary brand of oil-free brake disc cleaner.

Seat Care

Caution

Use of chemicals or high-pressure spray washers is not recommended for cleaning the seat. Using chemicals or pressure washers may damage the seat cover.

To help maintain its appearance, clean the seat using a sponge or cleaning cloth with soap and water.

Unpainted Aluminium Items

Items such as brake and clutch levers, wheels, engine covers, top and bottom yokes on some models must be correctly cleaned to preserve their appearance. Please contact your dealer if you are unsure which components on your motorcycle are unpainted aluminium parts.

Use a proprietary brand of aluminium cleaner.

Clean aluminium items regularly, in particular after use in inclement weather, where the components must be hand washed and dried each time the machine is used.

Warranty claims due to inadequate maintenance will not be allowed.

Cleaning the Windscreen and Clear Panels

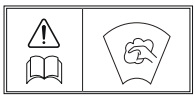

Clean the windscreen and clear panels with a solution of mild soap or detergent and lukewarm water. After cleaning, rinse well and then dry with a soft, lint free cloth.

Caution

Products such as window cleaning fluids, insect remover, rain repellent, scouring compounds, petrol or strong solvents such as alcohol, acetone, carbon tetrachloride, etc. will damage the windscreen. Never allow these products to contact the screen.

If the transparency of the windscreen or clear panels is reduced by scratches or oxidation which cannot be removed, the windscreen or clear panels must be replaced.

Warning

Never attempt to clean the windscreen while the motorcycle is in motion as releasing the handlebars may cause loss of motorcycle control and an accident.

Operation of the motorcycle with a damaged or scratched windscreen will reduce the rider's forward vision. Any such reduction in forward vision is dangerous and may lead to an accident causing injury or death.

Caution

Corrosive chemicals such as battery acid will damage the windscreen. Never allow corrosive chemicals to contact the windscreen.

Cleaning of the Exhaust System

All parts of the exhaust system of your motorcycle must be cleaned regularly to avoid a deterioration of its appearance.

Note:

- **The exhaust system must be cool before washing to prevent water spotting.**

Washing

Prepare a mixture of cold water and mild automotive cleaner. Do not use a highly alkaline soap as commonly found at commercial car washes because it leaves a residue.

Wash the exhaust system with a soft cloth. Do not use an abrasive scouring pad or steel wool. They will damage the finish.

Rinse the exhaust system thoroughly.

Ensure no soap or water enters the rear opening of the exhaust.

Drying

Dry the exhaust system as far as possible with a soft cloth. Do not run the engine to dry the system or spotting will occur.

Protecting

When the exhaust system is dry, rub "Motorex 645 Clean and Protect" into the surface.

Caution

The use of abrasive cleaners and polishes will damage the system and must not be used.

It is recommended that regular protection be applied to the system as this will both protect and enhance the system's appearance.

Care of Leather Products

We recommend that you periodically clean your leather products with a damp cloth and allow them to dry naturally at room temperature. This will maintain the appearance of the leather and ensure the long life of your product.

Your Triumph leather product is a natural product and lack of care can result in damage and permanent wear. Follow these simple instructions and give your leather product the respect it deserves:

- Do not use household cleaning products, bleach, detergents containing bleach or any kind of solvent to clean your leather product.
- Do not immerse your leather product in water.
- Avoid direct heat from fires and radiators which can dry out and distort the leather.
- Do not leave your leather product in direct sunlight for prolonged periods of time.
- Do not dry your leather product by applying direct heat to it at any time.
- If your leather product does get wet, absorb any excess water with a soft clean cloth then leave the product to dry naturally at room temperature.
- Avoid exposure of your leather product to high levels of salt, for example sea/salt water or road surfaces that have been treated during the winter for ice and snow.
- If exposure to salt is unavoidable, clean your leather product immediately after each exposure using a damp cloth then leave the product to dry naturally at room temperature.
- Gently clean any minor marks with a damp cloth then leave the product to dry naturally at room temperature.
- Place your leather product in a fabric bag or cardboard box to protect it when in storage. Do not use a plastic bag.

STORAGE

Preparation for Storage

Clean and dry the entire vehicle thoroughly.

Fill the fuel tank with the correct grade of unleaded fuel and add a fuel stabiliser (if available), following the fuel stabiliser manufacturer's instructions.

Warning

Petrol is extremely flammable and can be explosive under certain conditions. Turn the ignition switch off. Do not smoke. Make sure the area is well ventilated and free from any source of flame or sparks; this includes any appliance with a pilot light.

Remove the spark plug from each cylinder and put several drops (5 ml) of engine oil into each cylinder. Cover the spark plug holes with a piece of cloth or rag. With the engine stop switch in the RUN position, push the starter button for a few seconds to coat the cylinder walls with oil. Install the spark plugs, tightening to **12 Nm**.

Change the engine oil and filter (see page 139).

Check and if necessary correct the tyre pressures (see page 182).

Set the motorcycle on a stand so that both wheels are raised off the ground. (If this cannot be done, put boards under the front and rear wheels to keep dampness away from the tyres.)

Spray rust inhibiting oil (there are a host of products on the market and your dealer will be able to offer you local advice) on all unpainted metal surfaces to prevent rusting. Prevent oil from getting on rubber parts, brake discs or in the brake calipers.

Make sure the cooling system is filled with a 50% mixture of coolant (noting that HD4X Hybrid OAT coolant, as supplied by Triumph, is pre-mixed and requires no dilution) and distilled water solution (see page 141).

Remove the battery, and store it where it will not be exposed to direct sunlight, moisture, or freezing temperatures. During storage it should be given a slow charge (one ampere or less) about once every two weeks (see page 161).

Store the motorcycle in a cool, dry area, away from sunlight, and with a minimum daily temperature variation.

Put a suitable porous cover over the motorcycle to keep dust and dirt from collecting on it. Avoid using plastic or similar non-breathable, coated materials that restrict air flow and allow heat and moisture to accumulate.

Storage

Preparation after Storage

Install the battery (if removed) (see page 164).

If the motorcycle has been stored for more than four months, change the engine oil (see page 139).

Check all the points listed in the Daily Safety Checks section.

Before starting the engine, remove the spark plugs from each cylinder.

Put the side stand down.

Crank the engine on the starter motor several times until the oil pressure light goes out.

Refit the spark plugs, tightening to **12 Nm**, and start the engine.

Check and if necessary correct the tyre pressures (see page 182).

Clean the entire vehicle thoroughly.

Check the brakes for correct operation.

Test ride the motorcycle at low speeds.

SPECIFICATIONS

Dimensions

A list of dimensions specific to these models is available from your authorised Triumph dealer, or on the Internet at www.triumph.co.uk.

Weights

A list of weights specific to these models is available from your authorised Triumph dealer, or on the Internet at www.triumph.co.uk.

Maximum Payloads

Explorer XR	238 kg (525 lb)
Explorer XRx	236 kg (520 lb)
Explorer XRx-LRH	238 kg (525 lb)
Explorer XRT	227 kg (500 lb)
Explorer XC	236 kg (520 lb)
Explorer XCx	228 kg (503 lb)
Explorer XCx-LRH	231 kg (509 lb)
Explorer XCA	224 kg (494 lb)

Specifications

Engine

Type	In-line 3 cylinder
Displacement	1,215 cc
Bore x Stroke	85 x 71.4 mm
Compression Ratio	11:1
Cylinder Numbering	Left to Right
Cylinder Sequence	1 at left
Firing Order	1-2-3
Starting System	Electric Starter

Performance

A list of maximum power and maximum torque figures specific to these models is available from your authorised Triumph dealer, or on the Internet at www.triumph.co.uk.

Lubrication

Lubrication	Pressure Lubrication (wet sump)

Engine Oil Capacities

Dry Fill	4.5 litres
Oil/Filter Change	4.0 litres
Oil Change Only	3.85 litres

Cooling

Coolant Type	Triumph HD4X Hybrid OAT coolant
Water/Anti-freeze ratio	50/50 (pre-mixed as supplied by Triumph)
Coolant Capacity	2.8 litres
Thermostat Opens (nominal)	88°C (nominal)

Fuel System

Type	Electronic Fuel Injection
Injectors	Solenoid Operated
Fuel Pump	Submerged Electric
Fuel Pressure (nominal)	3.5 bar

Fuel

Type	91 RON unleaded
Tank Capacity (motorcycle upright)	20.0 litres

Ignition

Ignition System	Digital Inductive
Electronic Rev Limiter	9,500 r/min
Spark Plug	NGK CR8EK
Spark Plug Gap	0.7 mm
Gap Tolerance	+0.05/-0.1 mm

Transmission

Transmission Type	6 Speed, Constant Mesh
Clutch Type	Wet, Multi-Plate
Final Drive Ratio	2.557:1
Gear Ratios:	
Front Bevel Box	1.042:1 (24/25)
Rear Bevel Box	2.455:1 (11/27)
1st	2.846:1 (13/37)
2nd	2.056:1 (18/37)
3rd	1.583:1 (24/38)
4th	1.2916:1 (24/31)
5th	1.138:1 (29/33)
6th	1.037:1 (27/28)

Tyres

Tyre Sizes:	
Front Size	120/70 R19
Rear Size	170/60 R17
Tyre Pressures (Cold):	
Front	2.2 bar (32 lb/in²)
Rear	2.7 bar (39 lb/in²)

Approved Road Tyres:

A list of approved tyres specific to these models is available from your authorised Triumph dealer, or on the Internet at www.triumph.co.uk.

Approved Road Dual Purpose Tyres:

A list of approved dual purpose tyres specific to these models is available from your authorised Triumph dealer, or on the Internet at www.triumph.co.uk.

Warning

Use the recommended tyres ONLY in the combinations given. Do not mix tyres from different manufacturers or mix different specification tyres from the same manufacturers as this may result in loss of motorcycle control and an accident.

Warning

Tyre pressures which have been reduced for off-road riding will impair on-road stability. Always ensure the tyre pressures are set as described on page 156 for on-road use.

Operation of the motorcycle with incorrect tyre pressures may cause loss of motorcycle control leading to an accident.

Warning

The use of dual purpose tyres will result in reduced motorcycle stability. Always operate a motorcycle equipped with dual purpose tyres at reduced speeds. The permissible maximum speed must be indicated by a sticker, positioned so that it is clearly visible to the rider. Operation of the motorcycle above the permissible maximum speed may result in loss of motorcycle control and an accident.

Specifications

Electrical Equipment	
Battery Type	YTX20L-BS
Battery Rating	12 Volt, 18 Ah
Alternator	12 Volt, 70 Amp at 4,000 rpm
Headlight	2 x 12 Volt, 55/60 watt, H4 Halogen
Tail/Brake Light	LED
Parking light	12 Volt, 5 watt
Fog lights (if fitted)	LED
Directional Indicator Lights	RY10W, 12 Volt, 10 watt, amber
LED Directional Indicator Lights	LED
Frame	
Rake	23.1°
Trail	99.2 mm

Tightening Torques

Oil Filter	10 Nm
Oil Drain Plug	25 Nm
Spark Plug	12 Nm
Rear Wheel Nuts	70 Nm

Fluids and Lubricants

Engine Oil	Semi or fully synthetic 10W/40 or 10W/50 motorcycle engine oil which meets specification API SH (or higher) **and** JASO MA, such as Castrol Power 1 Racing 4T 10W-40 (fully synthetic)
Brake and Clutch Fluid	DOT 4 Brake and Clutch Fluid
Coolant	Triumph HD4X Hybrid OAT coolant
Bearings and Pivots	Grease to NLGI 2 specification
Final Drive Unit	Castrol SAF-XO (fully synthetic hypoid oil)

This page intentionally left blank

INDEX

A

Accessories 127

B

Battery 161
- Charging 163
- Disposal 162
- Installation 164
- Maintenance 162
- Removal 161

Brakes 145
- Anti-Lock Braking Systems (ABS) 118
- Brake and Clutch Lever Adjusters 75
- Brake Light 148
- Braking 115
- Breaking-in New Brake Pads and Discs 146
- Disc Brake Fluid 147
- Optimised Cornering ABS 119
- Pad Wear Compensation 146
- Wear Inspection 145

Bulb Replacement 171

C

Chassis Electronic Control Module (Chassis ECM) 167

Cleaning 173
- After Washing 174
- Care of Leather Products 176
- Care of Matt Paintwork 173
- Cleaning the Windscreen and Clear Panels 174
- Drying 175
- Exhaust System 175
- Preparation 173
- Protecting 175
- Unpainted Aluminium Items 174
- Washing 175
- Where to be Careful 173

Clutch 144
- Clutch Fluid Level Inspection and Adjustment 144

Considerations for High-Speed Operation 125

Cooling System 141
- Change 142
- Coolant Level Inspection 141
- Corrosion Inhibitors 141
- Level Adjustment 142

Cruise Control 76

D

Dimensions 179

E

Electrical Accessory Sockets 99

Electrical Equipment 184

Engine
- Engine Management System Malfunction Indicator Light 31
- Serial Number 17
- Specifications 180
- To Start the Engine 112
- To Stop the Engine 112

Engine Oil 138
- Disposal of Oil and Filters 140
- Grade and Specification 140
- Oil and Oil Filter Change 139
- Oil Level Inspection 138

F

Final Drive Unit 145

Fluids and Lubricants 185

Frame 184

Front Suspension 150
- Fork Inspection 150
- Front Suspension Adjustment . . . 151
- Front Suspension Setting Chart . . 152

Fuel 181

Index

Fuel Requirement 87
Filling the Fuel Tank 89
Fuel Grade. 87
Fuel Tank Cap. 88
Fuel System 181
Fuse Boxes 165

G

Gears
Changing Gears 114

H

Handlebar Adjustment. 91
Headlights 169
Adjustment 170
Helmet Hook 98
Hill Hold Control (if equipped) 121

I

Ignition 181
Engine immobiliser. 69
Key 68
Switch/Steering Lock 69
Instruments
Information Messages. 35
Motorcycle Status Display Screen 37
Ambient Air Temperature 41
Clock 41
Coolant Temperature Gauge 39
Cruise Set Speed 40
Fuel Gauge 38
Gear Position Display 39
Service/Maintenance Indicator 40
Speedometer 37
Multifunction Display Screen 42
Home Screen 42
Motorcycle Information 47
Riding Mode Display 43
Trip Meter Reset 46
Trip Meters 45
Triumph Semi Active Suspension (TSAS) Settings (if fitted). 44
Windscreen Adjustment Mode 43
Tachometer 36
Warning Messages. 35

L

Left Handlebar Switches 71
Direction Indicator Switch. 72
Fog Lights Switch (if fitted). 73
Headlight Dip Switch 71
Heated Grips Switch (if fitted) . . . 73
Horn Button 72
Instrument SCROLL Button 72
Instrument SELECT Button. 72
MODE Button 72
Lubrication 180
Luggage Systems
Expedition Aluminium Panniers (if fitted) 101

P

Parking 124
Parts Identification 14
Performance. 180

R

Rear Suspension 153
Rear Suspension Adjustment. . . . 153
Rear Suspension Setting Chart . . 154
Riding Modes 57
Riding Mode Configuration 62
Riding Mode Selection 58
Right Handlebar Switches 70
Cruise Control Adjust Button (if fitted) 70
Engine Stop Switch 70
Hazard Warning Lights 70
Starter Button 70
Running-In 107

S

Safety 6
Daily Checks 108
Fuel and Exhaust Fumes 7
Handlebars and Footrests 9
Helmet and Clothing 8
Maintenance/Equipment 11
Motorcycle 6
Parking 10
Parts and Accessories 10
Riding. 8
Seats. 93
Heated Seats (if fitted) 97
Passenger Seat 94
Rider's Seat. 95
Rider's Seat Height Adjustment . 96
Settings Menu. 48
Bike Setup. 50
Display Setup 55
Riding Modes 49
Show Warnings 49
Trip Setup 49
Stands 92
Centre Stand 93
Side Stand. 92
Steering/Wheel Bearings. 149
Inspection 149
Storage
Preparation after Storage 178
Preparation for Storage 177

T

Throttle Control. 74
Brake Use 74
Tightening Torques. 185
Tool Kit 98
Traction Control (TC). 82
Optimised Cornering Traction Control 82
Traction Control Settings 84
Transmission 182
Triumph Semi Active Suspension (TSAS) (if fitted) 80
Tyre Pressure Monitoring System . . . 84
Tyres 5, 155
Minimum Recommended Tread Depth 157
Tyre Inflation Pressures 156
Tyre Replacement 158
Tyre Wear 156

U

Universal Serial Bus (USB) Socket. . . 100

V

Vehicle Identification Number 17

W

Warning Lights 24
Warnings
Warning Label Locations. 12
Warning Labels. 4
Warnings, Cautions and Notes. . . . 4
Weights. 179
Windscreen 90

This page intentionally left blank

Industry Canada RSS Warning Statement:

EN

Under Industry Canada regulations, this radio transmitter may only operate using an antenna of a type and maximum (or lesser) gain approved for the transmitter by Industry Canada.

To reduce potential radio interference to other users, the antenna type and its gain should be so chosen that the equivalent isotropically radiated power (e.i.r.p.) is not more than that necessary for successful communication.

This device complies with Industry Canada licence-exempt RSS standard(s). Operation is subject to the following two conditions:

1. this device may not cause interference, and
2. this device must accept any interference, including interference that may cause undesired operation of the device.

FR

Conformément à la réglementation d'Industrie Canada, le présent émetteur radio peut fonctionner avec une antenne d'un type et d'un gain maximal (ou inférieur) approuvé pour l'émetteur par Industrie Canada.

Dans le but de réduire les risques de brouillage radioélectrique à l'intention des autres utilisateurs, il faut choisir le type d'antenne et son gain de sorte que la puissance isotrope rayonnée équivalente (p.i.r.e.) ne dépasse pas l'intensité nécessaire à l'établissement d'une communication satisfaisante.

Le présent appareil est conforme aux CNR d'Industrie Canada applicables aux appareils radio exempts de licence. L'exploitation est autorisée aux deux conditions suivantes:

1. l'appareil ne doit pas produire de brouillage, et
2. l'utilisateur de l'appareil doit accepter tout brouillage radioélectrique subi, même si le brouillage est susceptible d'en compromettre le fonctionnement.