PUBLICATION NUMBER: 10515-0152-4300
JUNE 2000
Rev. 02

Air Traffic Control Communications

MX-9325 TRANSCEIVER

INTERMEDIATE MAINTENANCE MANUAL

next level solutions

The material contained herein is subject to U.S. export approval.
No export or re-export is permitted without written approval from the U.S. Government.

LIMITED ONE YEAR WARRANTY
HARRIS CORPORATION (RF COMMUNICATIONS DIVISION)

FROM HARRIS TO YOU – This warranty is extended to the original buyer and applies to all Harris Corporation, RF Communications Division equipment purchased and employed for the service normally intended, except those products specifically excluded.

WHAT WE WILL DO – If your Harris Corporation, RF Communications Division equipment purchased from us for use outside the United States fails in normal use because of a defect in workmanship or materials within one year from the date of shipment, we will repair or replace (at our option) the equipment or part without charge to you, at our factory. If the product was purchased for use in the United States, we will repair or replace (at our option) the equipment or part without charge to you at our Authorized Repair Center or factory.

WHAT YOU MUST DO – You must notify us promptly of a defect within one year from date of shipment. Assuming that Harris concurs that the complaint is valid, and is unable to correct the problem without having the equipment shipped to Harris:

- Customers with equipment purchased for use outside the United States will be supplied with information for the return of the defective equipment or part to our factory in Rochester, NY, U.S.A., for repair or replacement. You must prepay all transportation, insurance, duty and customs charges. We will pay for return to you of the repaired/replaced equipment or part, C.I.F. destination; you must pay any duty, taxes or customs charges.
- Customers with equipment purchased for use in the United States must obtain a Return Authorization Number, properly pack, insure, prepay the shipping charges and ship the defective equipment or part to our factory or to the Authorized Warranty Repair Center indicated by us.

Harris Corporation	Telephone: (716) 244-5830
RF Communications Division	Fax: 716-242-4755
Customer Service	http://www.harris.com
1680 University Avenue	
Rochester, NY 14610, U.S.A.	

Harris will repair or replace the defective equipment or part and pay for its return to you, provided the repair or replacement is due to a cause covered by this warranty.

WHAT IS NOT COVERED – We regret that we cannot be responsible for:

- Defects or failures caused by buyer or user abuse or misuse.
- Defects or failures caused by unauthorized attempts to repair or alter the equipment in any way.
- Consequential damages incurred by a buyer or user from any cause whatsoever, including, but not limited to transportation, non-Harris repair or service costs, downtime costs, costs for substituting equipment or loss of anticipated profits or revenue.
- The performance of the equipment when used in combination with equipment not purchased from Harris.
- HARRIS MAKES NO OTHER WARRANTIES BEYOND THE EXPRESS WARRANTY AS CONTAINED HEREIN. ALL EXPRESS OR IMPLIED WARRANTIES OF FITNESS FOR A PARTICULAR PURPOSE OR MERCHANTABILITY ARE EXCLUDED.

SERVICE WARRANTY – Any repair service performed by Harris under this limited warranty is warranted to be free from defects in material or workmanship for sixty days from date of repair. All terms and exclusions of this limited warranty apply to the service warranty.

IMPORTANT – Customers who purchased equipment for use in the United States must obtain a Return Authorization Number before shipping the defective equipment to us. Failure to obtain a Return Authorization Number before shipment may result in a delay in the repair/replacement and return of your equipment.

IF YOU HAVE ANY QUESTIONS – Concerning this warranty or equipment sales or services, please contact our Customer Service Department.

PUBLICATION NUMBER: 10515-0152-4300
JUNE 2000
Rev. 02

MX-9325
TRANSCEIVER

INTERMEDIATE MAINTENANCE MANUAL

The material contained herein is subject to U.S. export approval. No export or re-export is permitted without written approval from the U.S. Government.

Information and descriptions contained herein are the property of Harris Corporation. Such information and descriptions may not be copied or reproduced by any means, or disseminated or distributed without the express prior written permission of Harris Corporation, RF Communications Division, 1680 University Avenue, Rochester, New York 14610-1887.

Copyright © 2000
By Harris Corporation
All Rights Reserved

Firmware Release: rev. **TBD**

HARRIS CORPORATION RF COMMUNICATIONS DIVISION
1680 University Avenue Rochester, New York 14610-1887 USA
Tel: 716-244-5830. Fax: 716-242-4755. http://www.harris.com

When an Adult Stops Breathing

WARNING

DO NOT attempt to perform the rescue breathing techniques provided on this page, unless certified. Performance of these techniques by uncertified personnel could result in further injury or death to the victim.

1 *Does the Person Respond?*

- Tap or gently shake victim.
- Shout, “Are you OK?”

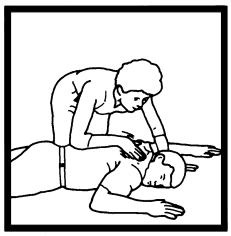

2 *Shout, “Help!”*

- Call people who can phone for help.

3 *Roll Person Onto Back*

- Roll victim toward you by pulling slowly.

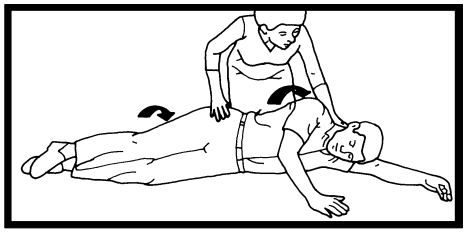

4 *Open Airway*

- Tilt head back and lift chin.

5 *Check for Breathing*

- Look, listen, and feel for breathing for 3 to 5 seconds.

6 *Give 2 Full Breaths*

- Keep head tilted back.
- Pinch nose shut.
- Seal your lips tight around victim’s mouth.
- Give 2 full breaths for 1 to 1-1/2 seconds each.

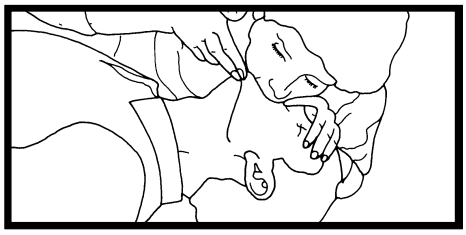

7 *Check for Pulse at Side of Neck*

- Feel for pulse for 5 to 10 seconds.

8 *Phone for Help*

- Send someone to call an ambulance.

9 *Begin Rescue Breathing*

- Keep head tilted back.
- Lift chin.
- Pinch nose shut.
- Give 1 full breath every 5 seconds.
- Look, listen, and feel for breathing between breaths.

10 *Recheck Pulse Every Minute*

- Keep head tilted back.
- Feel for pulse for 5 to 10 seconds.
- If victim has pulse but is not breathing, continue rescue breathing. If no pulse, begin CPR.

For more information about these and other life–saving techniques, contact your Red Cross chapter for training.
“When Breathing Stops” reproduced with permission from an American Red Cross Poster.

SAFETY SUMMARY

1. INTRODUCTION

All operators and maintenance personnel must observe the following safety precautions during operation and maintenance of this equipment. Specific warnings and cautions are provided in the manual and at the end of this Safety Summary. Warnings, Cautions, and Notes appear before various steps in the manual and will be used as follows:

- **WARNING** – Used when injury or death to personnel and damage to equipment is possible
- **CAUTION** – Used when there is a possibility of damage to equipment
- **NOTE** – Used to alert personnel to a condition that requires emphasis

2. PERSONNEL AND EQUIPMENT SAFETY

Basic safety precautions consider factors involved in protecting personnel from injury or death. Electrical, mechanical, EMR, material, or chemical hazards are the most common types of hazards found in electronic equipment. The following are types of hazards that may exist:

ELECTRICAL – Hazardous voltage and current levels may exist throughout the equipment. Contact with these hazards could cause electrocution, electrical shock, burns, or injury due to involuntary reflexes of the body.

MECHANICAL – Mechanical hazards are created when heavy assemblies and components must be removed and replaced. Moving parts (such as fan blades) and hot surfaces are potential mechanical hazards.

THERMAL – Burn hazards may exist in the equipment that could cause personal injuries and/or serious equipment damage. Internal surfaces of the equipment may be in excess of 65°C, the point at which personnel could be burned. Extreme caution should be used when working with any hot assemblies (for example, power supply or power amplifier assemblies). Physical injury or damage may result to personnel and/or equipment as a result of a reflex action to a burn.

CHEMICAL – Chemicals or materials used for servicing the equipment may present potential hazards. Many chemical agents, such as cleaners and solvents, may be toxic, volatile, or flammable. If used incorrectly, these agents can cause injury or death.

EMR – Overexposure to electromagnetic radiation results from amplified radio frequencies that may produce a health hazard.

3. OPERATIONAL AND MAINTENANCE SAFETY GUIDELINES

Good safety discipline is critical to prevent injury to personnel. All other safety measures are useless if personnel do not observe the safety precautions and do not follow safety disciplines. Once aware of a hazard, personnel should ensure that all other personnel are aware of the hazard. The following basic safety disciplines are stressed:

a. Read a procedure entirely before performing it. Personnel must always perform each assigned task in a safe manner.

b. Prior to applying equipment power after maintenance, personnel must ensure that all unsecured hand tools and test equipment are disconnected from the serviced/maintained equipment and properly stored.

c. Power to the equipment must be removed before a piece of equipment is removed.

d. Extreme care must be used when adjusting or working on operating equipment. Voltages in excess of 70 V or current sources in excess of 25 A are covered with barriers. Barriers include warning information about the hazard encountered upon barrier removal.

e. Personnel must react when someone is being electrically shocked. Perform the following steps:

   1. Shut off power.

   2. Call for help.

   3. Administer first aid if qualified.

   Under no circumstances should a person come directly in contact with the body unless the power has been removed. When immediate removal of the power is not possible, personnel must use a non-conductive material to try to jolt or pry the body away from the point of shock.

f. Personnel should work with one hand whenever possible to prevent electrical current from passing through vital organs of the body. In addition, personnel must never work alone. Someone must be available in the immediate area to render emergency first aid, if necessary.

g. Lifting can cause injury. Items weighing more than 37 pounds must be lifted by two or more people.

h. Some electrolytic capacitors contain aluminum oxide or tantalum. If connected incorrectly, the capacitor will explode when power is applied. Extreme care must be used when replacing and connecting these capacitors. The capacitor terminals must always be connected using the correct polarity: positive to positive and negative to negative.

The next section contains general safety precautions not directly related to specific procedures or equipment. These precautions are oriented toward the maintenance technician. However, all personnel must understand and apply these precautions during the many phases of operation and maintenance of the equipment. The following precautions must be observed:

DO NOT SERVICE EQUIPMENT ALONE

Never work on electrical equipment unless another person familiar with the operation and hazards of the equipment is near. When the maintenance technician is aided by operators, ensure that operators are aware of the hazards.

GROUNDING

Always ensure that all equipment and assemblies are properly grounded when operating or servicing.

TURN OFF POWER AND GROUND CAPACITORS

Whenever possible, power to equipment should be turned off before beginning work on the equipment. Be sure to ground all capacitors that are potentially dangerous.

KEEP AWAY FROM LIVE CIRCUITS

Operators and maintainers must observe all safety regulations at all times. Do not change components or make adjustments inside equipment with a high voltage supply on unless required by the procedure. Under certain conditions, dangerous potentials may exist in circuits with power controls off, due to charges retained by capacitors.

DO NOT BYPASS INTERLOCKS

Do not bypass any interlocks unnecessarily. If it is necessary to employ an interlock bypass for equipment servicing, use extreme care not to come in contact with hazardous voltages.

USE CARE HANDLING HEAVY EQUIPMENT

Never attempt to lift large assemblies or equipment without knowing their weight. Use enough personnel or a mechanical lifting device to properly handle the item without causing personal injury.

HEED WARNINGS AND CAUTIONS

Specific warnings and cautions are provided to ensure the safety and protection of personnel and equipment. Be familiar with and strictly follow all warnings and cautions on the equipment and in technical manuals.

PROTECTIVE EYEWEAR

All personnel must wear protective eyewear when servicing or maintaining equipment. Protective eyewear must be worn at all times when using tools.

4. PROTECTION OF STATIC-SENSITIVE DEVICES

Diode input-protection is provided on all CMOS devices. This protection is designed to guard against adverse electrical conditions such as electrostatic discharge. Although most static-sensitive devices contain protective circuitry, several precautionary steps should be taken to avoid the application of potentially damaging voltages to the inputs of the device.

To protect static-sensitive devices from damage, the following precautions should be observed.

a. Keep all static-sensitive devices in their protective packaging until needed. This packaging is conductive and should provide adequate protection for the device. Storing or transporting these devices in conventional plastic containers could be destructive to the device.

b. Disconnect power prior to insertion or extraction of these devices. This also applies to PWBs containing such devices.

c. Double check test equipment voltages and polarities prior to conducting any tests.

d. Avoid contact with the leads of the device. The component should always be handled carefully by the ends or side opposite the leads.

e. Avoid contact between PWB circuits or component leads and synthetic clothing.

f. Use only soldering irons and tools that are properly grounded. Ungrounded soldering tips or tools can destroy these devices. SOLDERING GUNS MUST NEVER BE USED.

5. EXPLANATION OF HAZARD SYMBOLS

The symbol of drops of a liquid onto a hand shows that the material will cause burns or irritation of human skin or tissue.

The symbol of a person wearing goggles shows that the material will injure your eyes.

The symbol of a flame shows that a material can ignite and burn you.

The symbol of a skull and crossbones shows that a material is poisonous or a danger to life.

The symbol of a human figure in a cloud shows that vapors of a material present danger to your life or health.

MX-9325
TRANSCEIVER

INTERMEDIATE MAINTENANCE MANUAL

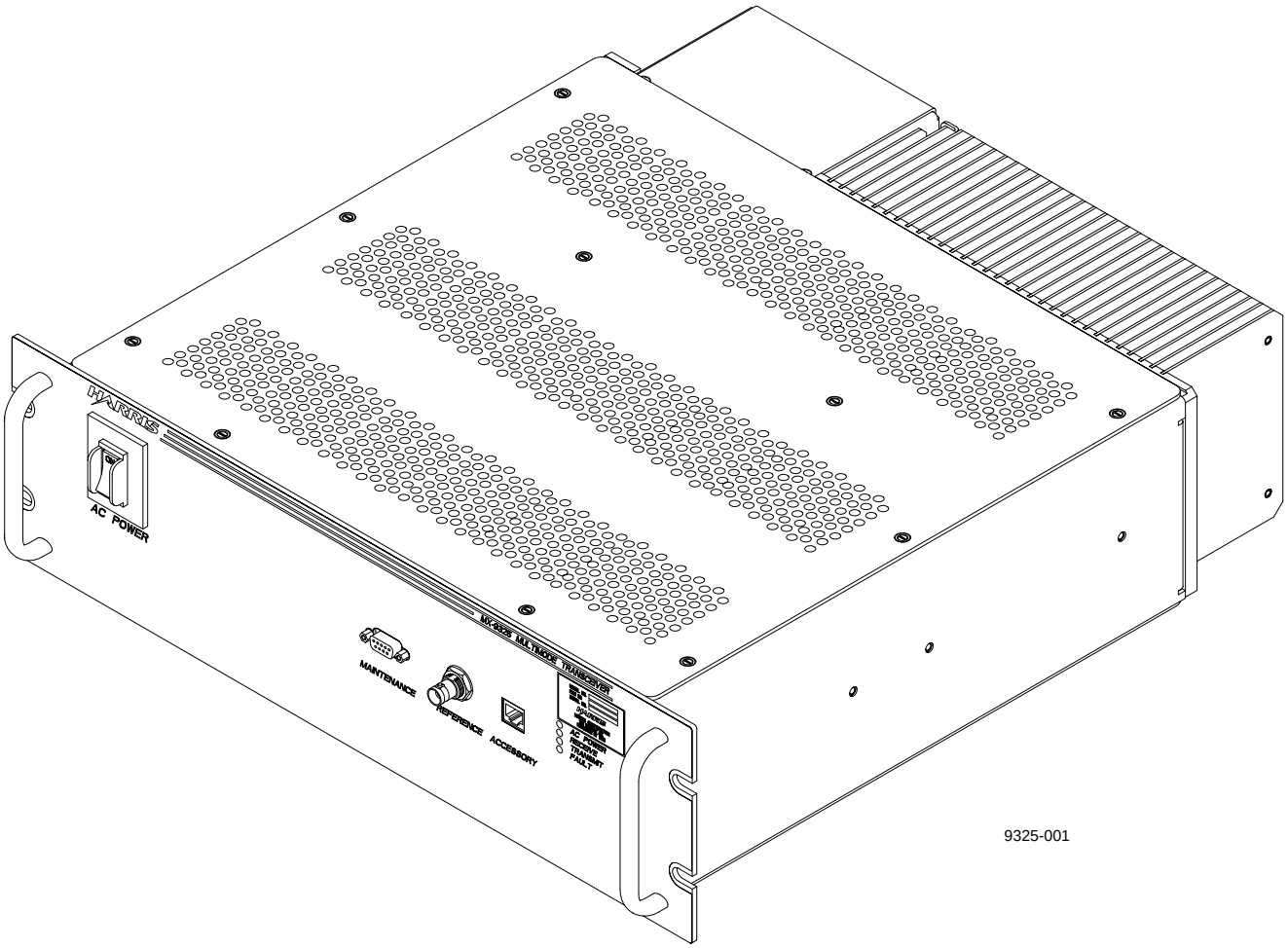

Figure 1-1. MX-9325 Transceiver

CHAPTER 1

GENERAL INFORMATION

1.1 INTRODUCTION

This manual provides the technician with all technical information required to support level III maintenance as described in Appendix B.

The overall intent of this manual is to help the technician expedite repair of the unit in a reasonable amount of time, resulting in reduced down-time and increased system availability. Detailed information that is useful to the technician is provided: configuration, specifications, fault isolation, repair, tools, test equipment, and functional descriptions of the assemblies. A glossary of terms is also provided in Appendix A.

1.2 WARRANTY

For warranty information refer to the inside front cover of this manual.

NOTE

Contractual agreements may supersede standard warranty. Refer to contract agreement for additional warranty information.

1.3 GENERAL EQUIPMENT DESCRIPTION

1.3.1 MX-9325 Transceiver

Figure 1-1 shows the MX-9325 Transceiver.

The MX-9325 Transceiver is a rack-mounted, fully programmable unit. The MX-9325 Transceiver operates as a double sideband AM-MSK analog data Transceiver or as a D8PSK digital-data transceiver. The MX-9325 Transceiver yields a 25-Watt power output that covers the frequency range of 118.000 to 136.975 MHz with 25 kHz spacing between channels. All programmable features and functions are controlled via asynchronous serial port on front panel from a PC or an ASCII terminal. The MX-9325 Transceiver operates from 87 Vac to 265 Vac, 47 Hz to 63 Hz.

The MX-9325 Transceiver represents a new generation of ground-to-air VHF radio equipment to meet the demanding needs for ATC communications. This advanced MX-9325 Transceiver is designed to operate in two modes. As a double sideband AM-MSK analog data transceiver, the MX-9325 Transceiver supports the requirements for a multiple-mode communications radio for ACARS utilizing an MSK modem integral to the radio providing all modulation/demodulation and CSMA for media access control**.** As a D8PSK digital-data transceiver, the MX-9325 Transceiver supports the following operational requirements:

- Mode 2 ICAO Annex 10, Volume III
- Mode 3 operation per RTCA SC-172, working group 3 MOPS
- EUROCAE working group 47 MOPS

The MX-9325 Transceiver is operated from a VHF Ground Computer (VGC) using ACARS software. For more information on operations, refer to the VGC and ACARS Operations Manual. Locally the VGC interfaces to the MX-9325 Transceiver Host Port. Remote operations are controlled using a VGC with an optional VHF Extender Unit. Refer to Paragraph 1.3.2 for VHF Extender Unit description. The Extender Unit is also required for split site configuration (MX-9325 Transceiver installed as a separate transmitter and receiver function). Remote control is via an RS-422 electrical connection using a baud rate up to 192 k baud programmable from the VGC.

The MX-9325 Transceiver maintains three non-volatile storage areas called Software Banks, to hold downloaded software data. At any time, two of the banks are considered active and contain valid copies of the MX-9325 Transceiver operating software. This enables the radio to execute the most recent downloaded version of its software, or to switch to a previously downloaded version via instruction from the VGC. When a MX-9325 transceiver is shipped from the factory, it contains identical versions of software in all software banks, although only two banks are regarded as containing active software versions.

Another feature of the MX-9325 Transceiver is its BIT capability. BIT self-test routine diagnoses and isolates faults within the MX-9325 Transceiver to the assembly level. Faults are reported to the MX-9325 Transceiver front panel fault LED. The fault code is diagnosed at a PC or ASCII terminal connected to the front panel mounted maintenance port or from the VGC using a BIT command. This feature helps to quickly test and repair the transceiver. Within the MX-9325 Transceiver BIT, it continuously monitors power supply output, synthesizer lock status, receiver sensitivity and the PA temperature.

1.3.2 VHF Extender Unit (optional)

Figure 1-2 shows the VHF Extender Unit. The VHF Extender Unit is required for remote and split site configurations.

The VHF Extender Unit is rack mounted and consists of 14 plug-in card modules and two fused power supplies to accommodate inputs of 115 or 230 Vac. The VHF Extender Unit is designed to interface signal or multiple Transceivers to the VGC and to an optional 4 by 4 antenna relay switch that automatically switches the VGC to a reserved MX-9325 Transceiver during a disabling fault situation.

Using the VHF Extender Unit, the receivers channel busy and the transmitter’s receiver mute differential signal output lines are extended to the remote site by means of a current loop interface circuit, capable of driving the required maximum length of hard wire lines between sites. Refer to Chapter 3 for MX-9325 Transceiver configuration. Refer to Chapter 8 for system interconnect diagrams.

The VHF Extender Unit specifications are included in Table 1-3.

1.3.2.1 VHF Extender Unit Plug-in Module Cards

The VHF Extender Unit uses three types of plug-in module cards. The type and quantity depend on the MX-9325 Transceiver system configuration. The following are the plug-in module card types and configuration when used:

- EIA-530 Modem - A high speed, short range synchronous COTS data modem card. The EIA-530 Modem is required for each MX-9325 Transceiver to communicate in remote site configuration, quantity 14 maximum. The EIA-530 Modem is utilized to extend the Host Port EIA-serial data interface between the local site computer or MX-9325 Transceiver and remote site MX-9325 Transceiver.

- Discrete I/O Card - A circuit card containing two (2) discrete control line level converters. The Discrete I/O Card is required along with each EIA-530 Modem for split site MX-9325 Transceiver configuration, quantity seven (7) maximum of discreet I/O cards with seven (7) maximum EIA-530 Modems. The Discrete I/O Card is utilized to extend the transmit mute and receiver channel busy signals between local and remote site MX-9325 Transceivers to support ACARS and Mode 2 operation. Each board has an EIA-422 signal level input and output (TX/RX) which is converted to and from differential 20 mA loop levels for transmission over the intersite lines.

- RS-232 Modem - A low speed, short-range asynchronous COTS data modem card. Required for each optional antenna relay switch installed. One (1) antenna relay switch accommodates eight (8) transceivers. The RS-232 Modem is utilized to extend EIA-232 Serial data between VGC and multiple Transceivers to a 4 by 4 antenna relay switch that automatically switches the VGC to a reserved MX-9325 Transceiver during a disabling fault situation.

Refer to Table 1-2 for additional VHF Extender Unit configuration information.

1.3.3 MX-9325 Transceiver Front Panel

See Figure 1-1. The MX-9325 Transceiver front panel provides serial connector for maintenance interface. Also provided on the front panel, on/off switch, status indication LEDs, reference oscillator test connection and an accessory connector.

1.3.4 MX-9325 Transceiver Rear Panel

Refer to Chapter 8, Figure 8-2. The MX-9325 Transceiver rear panel provides AC power connector, antenna (RF) connection, discrete I/O port, extender port, and host (data) port.

1.3.5 VHF Extender Unit Rear Panel

Refer to Chapter 8, Figure 8-3. The VHF Extender Unit rear panel provides 14 snap type terminal block transmission line connections, 14-dB 25 female data interface connections.

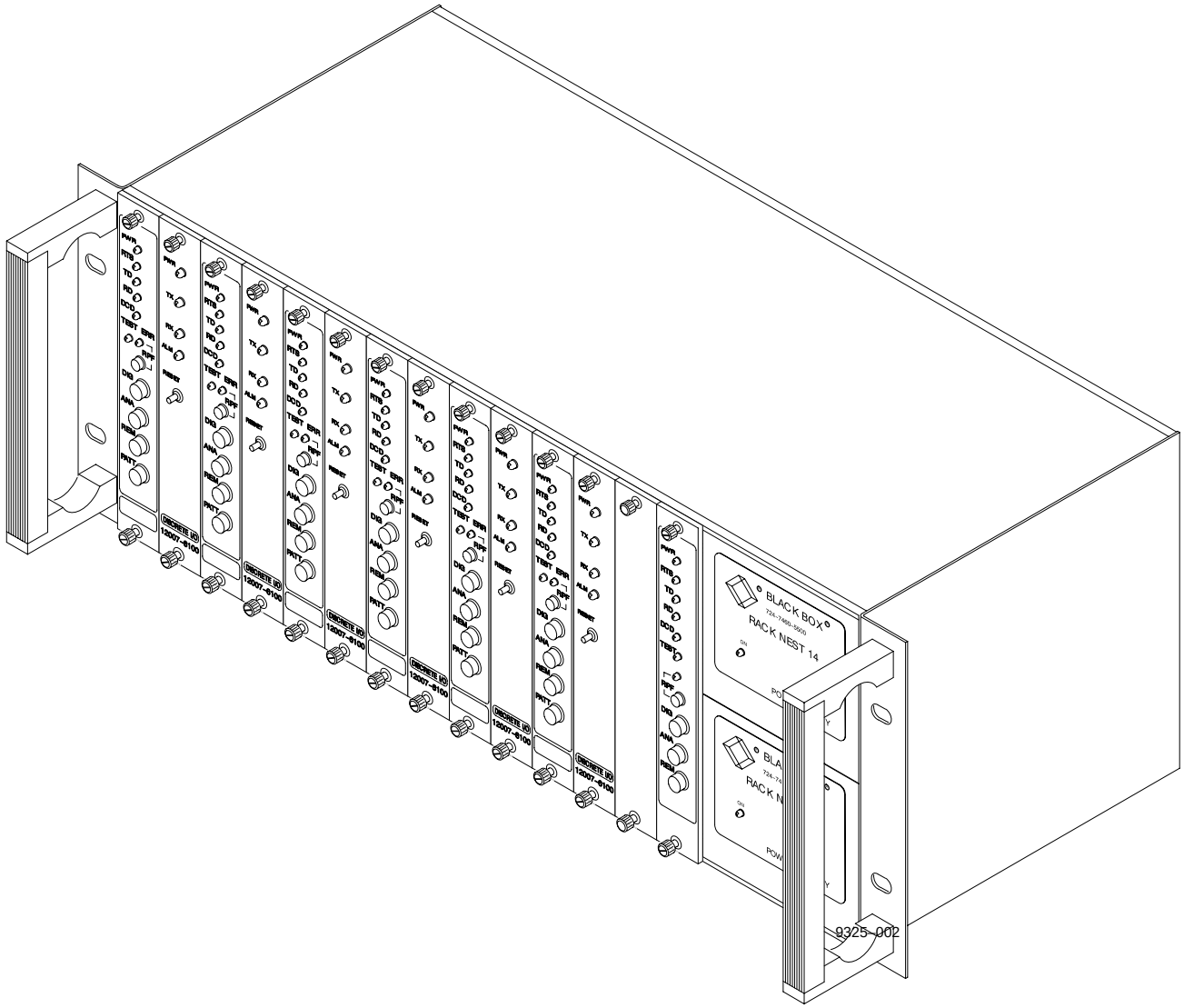

Figure 1-2. VHF Extender Unit

1.3.6 Mounting

The MX-9325 Transceiver and VHF extender unit are designed to be rack mounted. Refer to Chapter 6 and Chapter 8 for installation information.

1.3.7 MX-9325 MX-9325 Transceiver Configuration Information

Table 1-1 identifies the MX-9325 Transceiver configuration and part number described in this manual. Table 1-2 identifies the VHF extender unit configurations and part numbers described in this manual. Refer to Chapter 7 for family tree. For firmware revision of this manual, refer to the title page that appears just after the warranty inside the front cover.

Table 1-1. MX-9325 Transceiver Configurations

Product	Description	Part Number
MX-9325	VHF Multimode Transceiver	12007-1000-01

1.3.8 VHF Extender Unit Configuration Information

Table 1-2 identifies the VHF extender unit configurations and part numbers described in this manual. Column one (1) lists the part number with the last two (2) digits being the number of MX-9325 Transceivers supported. Refer to Chapter 7 for the family tree. For firmware revision of this manual, refer to the title page that appears just after the warranty inside the front cover.

Table 1-2. VHS Extender Unit Configurations

Part Number	VHF Extender Unit Configuration Description	Qty of EIA-530 Modem	Slot Position in use by EIA-530 Modem	Qty of I/O Card	Slot Position in use by I/O Card	Qty of RS-232 Modem	Slot Position in use by RS-232 Modem
12007-6000-001 Thru 12007-6000-014	Remote or Split Site 1 XCVR Thru Remote or Split Site 14 XCVR's	1 thru 14	1 thru 14	0 Thru 0	0 Thru 0	0 Thru 0	0 Thru 0
12007-6000-101 Thru 12007-6000-108 12007-6000-109 Thru 12007-6000-112	Remote Site 1 XCVR 1 Ant. Sw. Thru Remote Site 8 XCVR's 1 Ant. Sw. Remote Site 9 XCVR's 2 Ant. Sw. Thru Remote Site 12 XCVR's 2 Ant. Sw.	1 thru 8 9 thru 12	1 thru 8 9 thru 12	0 Thru 0 0 Thru 0	0 Thru 0 0 Thru 0	1 Thru 1 2 Thru 2	14 Thru 14 13,14 Thru 13,14
12007-6000-201 Thru 12007-6000-207	Split Site 1 XCVR Thru Split Site 7 XCVR's	1 thru 7	1 thru 1,3,5,7,9, 11,13	1 Thru 7	2 Thru 2,4,6,8, 10,12,14	0 Thru 0	0 Thru 0
12007-6000-301 Thru 12007-6000-306	Split Site 1 XCVR 1 Ant. Sw. Thru Split Site 6 XCVR's 1 Ant. Sw.	1 thru 6	1 thru 1,3,5, 7,9,11	1 Thru 6	2 Thru 2,4,6,8,10 ,12,14	1 Thru 1	14 Thru 14

1.3.8.1 MX-9325 Transceiver Unit Identification

MX-9325 Transceiver identification information is located on the front panel identification tag.

1.3.8.2 VHF Extender Unit Identification

VHF Extender Unit Identification is located ***TBD.***

1.4 ADDITIONAL ITEMS SHIPPED WITH UNIT

The MX-9325 Transceiver is shipped with an ancillary kit which is listed in Chapter 7, Paragraph 7.4.4.

1.5 REFERENCE DOCUMENTS

Refer to the following documents for additional information on the OEM VHF Extender Unit.

- RAD Data Communications Publication No. 601-200-04/99, ASM-20 Synchronous/Asynchronous Short Range Modem Installation and Operation manual, April 1999.
- RAD Data communications Website, www.rad.com, September 1999.
- Electronics Industries Association, EIA-530 Standard: High Speed 25-position Interface for Data Terminal Equipment and Data circuit-Terminating Equipment, 18 March 1987.
- Black Box Corporation, 256-kbps Line-Driver (LDM-256) Cards User Manual, August 1997.
- Black box Corporation, Racknest 2/14 User Manual, March 1997.
- Black Box Corporation, LDM-MR19.2 User Manual, April 1998.

1.6 RECOMMENDED TOOLS AND TEST EQUIPMENT

Tools and test equipment recommended for installing, troubleshooting, and repairing the MX-9325 Transceiver are listed in Chapter 7, Paragraph 7.3.

1.7 SPECIFICATIONS

Refer to Table 1-3 for MX-9325 Transceiver specifications.

Table 1-3. MX-9325 Transceiver Specifications

Function	Specification
GENERAL	
Frequency Range	118 MHz to 136.975 MHz
Frequency Tolerance	1 PPM, –20°C to +55°C, aging 1 ppm per year maximum
Channel Spacing	25 kHz
Tuning Time	100 ms from the receipt of the last bit of the frequency change command.
Receive to Transmit Turnaround	1 ms after terminating the receive function
Transmit to Receive Turnaround	1 ms after terminating the final information
EMI/EMC Approvals	BZT, CE OFCOM and U.S. FCC Class B Operation
Safety Agency Approvals	CSA, UL, BSI
BIT	DC power supplies, PA temperature, synthesizer lock, receiver sensitivity
Data Interface	Data Port: RS-422 synchronous, rear panel DB-25 with RS-530 connector definition Maintenance Port: RS-232 asynchronous, up to 192 kbps, via front panel DB-9 female connector
Modes	AM-MSK : Per ARINC Specification 618-2 Mode 2: Per ICAO Annex 10 Mode 3: Per RTCA SC-172 WG3 MOPS

Table 1-3. MX-9325 Transceiver Specifications – Continued

Function	Specification
Channel Statistics	SNR,RSSI, Pre-key value, message duration, cumulative receive time, cumulative standby time.
TRANSMITTER	
Output Power	MSK: 25 Watts adjustable from 5 to 25 Watts via maintenance port D8PSK: 25 Watts average
VSWR	No degradation for up to 2:1; no damage from infinite VSWR
Duty Cycle	50% Continuous
Harmonic and Spurious Emissions	- 80 dBc minimum for all modes
Adjacent Channel Power and Wide-band Noise	MSK: -70 dBc minimum; D8PSK: Per ICAO Annex 10
Transmitter Time-out Time	5 to 60 seconds, adjustable
Transmitter Keying	Via maintenance port for installation setup and test
RF Power Rise time	Less that 190 µs (two symbols)
RF Power Release Time	Within 190 µs after transmitting the final information symbol
Data Rate	MSK: 2400 bps D8PSK: 31.5 kilobits per second ± 0.005%
Transmitter Pre-key	0 to 190 msec, adjustment via maintenance port 85 msec default
Transmitter Phase and Amplitude Balance	D8PSK: 90± 3 degrees phase, and ± 1 dB amplitude maximum
Transit Delay	MSK: 10 mS maximum
Frequency Response	MSK: 200 Hz to 3600 Hz ± 2 dB
Differential Phase Delay	MSK: 20 µS
Audio Distortion	MSK: 5%
Modulation Level	MSK: adjustable 30 to 95% via maintenance port
Internal Test Signals	MSK: 1200 or 2400 Hz individual; random sequence of 1200 Hz and 2400 Hz; 1 kHz D8PSK: CW carrier, continuous random data
Digital Interface, Data (J3)	RS-232 or RS-422
RECEIVER	
Sensitivity	MSK: - 99 dBm for 10 dB SINAD, 30% AM with 1 kHz modulation signal; D8PSK: - 103 dBm for 10^{-3} uncorrected BER
IF Selectivity	- 6 dB at ± 10kHz; - 80 dB at ± 25 kHz
Adjacent Channel Rejection	44 dB minimum for 10^{-3} uncorrected BER (per EUROCAE MOPS)
Spurious Radiation	80 dB minimum
Rejection of Signals in the VHF Band	For -3 dBm interferer (Fi) removed from desired 450 ≤ (Fi) ≤ 2000 kHz, less than 3 dB SINAD degradation; For 0 dB interferer (Fi) removed from desired Fi ≤ 2 MHz, less that 3 dB SINAD degradation
Rejection of Signals outside the VHF Band	For signal interferer 0 dB or less within FM broadcast band, no SINAD degradation.
In-Band Signal Rejection	70 dB minimum for interfering signals spaced greater that 100 kHz from desired.
FM Broadcast Intermodulation	For two interfering signals 0 dB or less within FM broadcast band, no SINAD degradation.

Table 1-3. MX-9325 Transceiver Specifications – Continued

Function	Specification
Noise Rejection	For -157 dBm/Hz AWG noise input and -95 dBm desired, 10^{-3} uncorrected BER minimum
Desired Signal Dynamic Range	+ 10 to – 103 dBm for 10^{-3} corrected BER
Symbol Rate Capture Range	60 parts per million minimum for 10^{-3} uncorrected BER
Frequency Capture Range	± 965 Hz minimum for 10^{-3} uncorrected BER
Doppler Rate	±18 Hz/s minimum for 10^{-3} uncorrected BER within ± 140 Hz Doppler shift range
Co-Channel Interference	–20 dB for 10^{-3} uncorrected BER
Conducted Spurious Emission	–64 dBm maximum 50 kHz to 1215 MHz
Cross Modulation	60 dB for interferer (Fi) removed from desired 25 ≤ Fi ≤ 1000 kHz 80 dB for interferer (Fi) removed from desired Fi > 1 MHz
Transit Delay	MSK: 10 ms maximum
AGC Attack Time	MSK: 7.5 ms maximum
AGC Release Time	MSK: 7.5 ms maximum
Squelch Disable	Internal, via maintenance port
Loudspeaker	External, handset via maintenance port jack
Receiver Mute	internal, via maintenance port
Signal Quality Output (RSSI)	Reported to GSC via ACARS message format
Maximum RF Input	5 Vrms minimum without damage
AS Power Requirements	87 to 265 Vac 47 Hz – 63 Hz
POWER	
DC Power Requirements	None
Input Power Consumption	250 Watts
ENVIRONMENTAL	
Operating Temperature	–20°C to +55°C
Humidity	Up to 95% Non-Condensing
Storage Temperature	–40°C to + 70°C
Altitude	10,000 ft
RELIABILITY/MAINTAINABILITY	
Self Test	BITE
MTBF	>50,000 Hours
MTTR	<15 Minutes
MECHANICAL	
Size	5.25 H x 18.5 L x 19.0 W inches (13.36 H x 45.72 D x 48.26 W centimeters)
Weight	35 lbs (15.4 kg)

Table 1-4. VHF Extender Unit Specifications

Function	Specification
OEM CHASSIS ASSEMBLY	
Physical Dimensions	7” H x 19” W x 10” D (17.8 cm H x 48.3 cm W x 25.4 cm D) Fits standard 19” rack, 4 rack units high.

Table 1-4. VHF Extender Unit Specifications – Continued

Function	Specification
Capacity	14 slots for circuit cards, 2 slots for non-interchangeable power supply cards
Power Supply	115 Vac ± 10%, 47 - 63 Hz 230 Vac ± 10%, 47 - 63 Hz
Temperature	0° - 50°C (32° - 122°F)
Humidity	10 to 90%, non-condensing
Certifications	CE, UL
EIA-530 MODEM	
Diagnostics	Local Digital Loopback: Activated by a manual switch (DIG) Remote Digital Loopback: Activated by manual switch (REM) or RL pin 21 of the EIA-530 I/F (per V.54, Loop 2) Local Analog Loopback: Activated by manual switch (ANA) or LL Pin 18 of the EIA-530 I/F (per V.54, Loop 3)
Function	**Specification**
Connectors	Male Board Edge connector, 44 pin (38 contact), mates with chassis slot connector
Power Consumption	5 watts
Temperature	0° - 50°C (32° - 122°F)
Humidity	10 to 90%, non-condensing
Maximum Altitude	8000 ft. (2438.4m)
Certifications	FCC Class A
Function	**Specification**
DISCRETE I / O CARD	
Physical Dimensions	6.2” H x 1” W x 9.1” D (15.7 cm H x 2.5 cm W x 23.0 cm D)
Weight	8 oz. approx.
Transmission Line I/F	Unloaded twisted pair, 19 to 26 AWG
Output Signal	20 mA loop, in a differential configuration
Digital Interface	2x RS-422 Balanced pairs, TX, 1 RX
Signal Rates	1000 pps maximum
Transmission Delay	Dependent on characteristics of Intersite Transmission line typical 50µsec
Diagnostics	Receive Loop fail indication - with front panel LED and Alarm contact closure.
Alarm Output	Bi-directional Solid State relay, NO or NC strap configuration Output On resistance = 1Ω normal Maximum Output Current = < 250 mA Maximum Output Voltage = 55 Vdc Input/Output Insulation Voltage = 2500 VAC Maximum
Alarm Reset Input	Contact closure (TTL compatible)
Connectors	Male Board Edge Connector, 44 pin (38 contact), mates with chassis slot connector
Power Consumption	< 100 mA from Chassis supply
Temperature	0° - 50°C (32° - 122°F)

Table 1-4. VHF Extender Unit Specifications – Continued

Function	Specification
Humidity	10 to 90%, non-condensing
RS-232 MODEM	
Alternate Source	Unloaded twisted pair, 19 to 26 AWG
Physical Dimensions	20 mA loop, in a differential configuration
Weight	2x RS-422 Balanced pairs, TX, 1 RX
Transmission Line I/F	1000 pps maximum
Transmit Level	Dependent on characteristics of Intersite Transmission line typical 50µsec
Transmit Impedance	Receive Loop fail indication - with front panel LED and Alarm contact closure.
Receive Impedance	150, 300, 600Ω, or HIGH, strap selectable
Return Loss	> 15 dB
Carrier	Controlled by RTS or constantly ON
Modulation	Conditioned differential di-phase EUROCOM Standard D1
Digital Interface	V.24/RS-232D (EIA-232)
Data Rates, Sync / Async	19.2 kbps (other rates include 1.2, 2.4 3.6, 4.8, 7.2, 9.6 and 14.4 kbps)
RTS/CTS Delay	0, 8, 64 milliseconds, switch selectable
Data Word Length	8, 9, 10 11 bits
Stop Bits	1, 1.5, 2 bits
Timing Elements	Receive Clock is derived from the receive signal; Transmit Clock is derived from 3 alterative source: Internal oscillator, External from DTE, or Loop Clock derived from the receive signal.
Diagnostics	Local Digital Loopback: Activated by a manual switch (DIG) Remote Digital Loopback: Activated by manual switch (REM) or RL pin 21 of the RS-232 I/F (per V.54, Loop 2) Local Analog Loopback: Activated by manual switch (ANA) or LL Pin 18 of the RS-232 I/F (per V.54, Loop 3)
Connectors	Male Board Edge Connector, 44 pin (38 contact), mates with chassis connector
Power Consumption	3 watts
Temperature	0° - 50°C (32° - 122°F)
Humidity	up to 90%, non-condensing
Certifications	FCC Part 15, Subpart J Class A

NOTE

Because Harris engineers continuously strive to improve all aspects of Harris equipment, specifications are subject to change without notice.

CHAPTER 2

OPERATION

2.1 INTRODUCTION

This chapter contains information necessary for operation of the MX-9325 Transceiver at the intermediate maintenance level. This information consists of operator controls and indicators, and operating instructions. A description of the front panel controls, indicators, and connectors is provided in Paragraph 2.2. Basic operating procedures are provided in Paragraph 2.3. Setup and programming procedures are provided in Chapter 3.

2.2 FRONT PANEL CONTROLS, INDICATORS, AND CONNECTORS

Figure 2-1 shows the controls, indicators, and connectors on the MX-9325 Transceiver front panel. Table 2-1 describes the controls, indicators, and connectors.

Figure 2-2 shows the controls and indicators on the VHF Extender Unit front panel. Table 2-2 describes the controls and indicators.

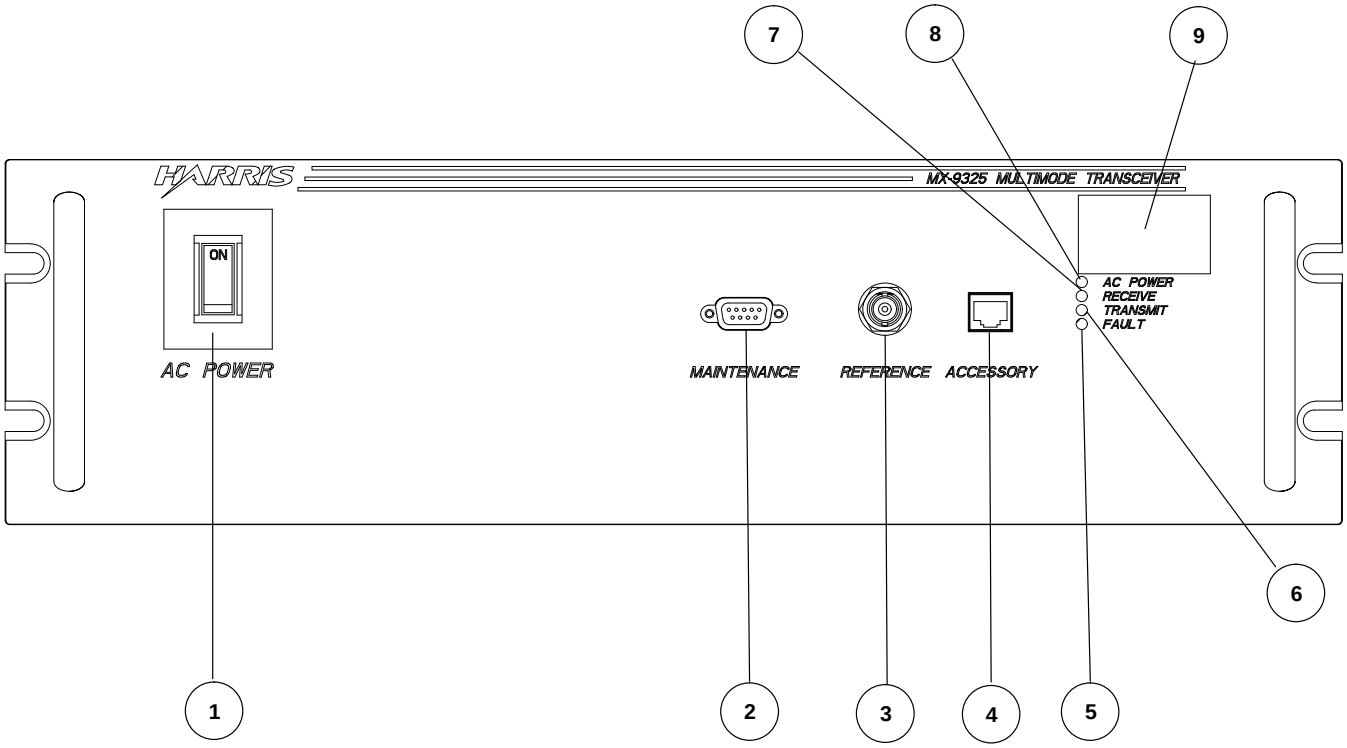

FRONT VIEW

9325-003

Figure 2-1. Front Panel Controls, Indicators, and Connectors

Table 2-1. Front Panel Controls, Indicators, and Connectors

Key (Fig 2-1)	Control/Indicator	Function
1	Power ON/OFF Switch	Used to power MX-9325 Transceiver on or off.
2	Maintenance Port	Used for local control and setup of transceiver.
3	Frequency Reference Oscillator	Test – used to measure and calibrate MX-9325 Transceiver reference oscillator.
4	Accessory connector	Used to test receive and transmit audio parameters in MSK mode.
5	Fault LED	Lights when internal fault is detected.
6	Transmit LED	Lights when MX-9325 Transceiver is transmitting data.
7	Receive LED	Lights when MX-9325 Transceiver is receiving data.
8	AC Power LED	Lights when MX-9325 Transceiver is powered on.
9	Product Identification Tag	Contains MX-9325 Transceiver part number and serial number.

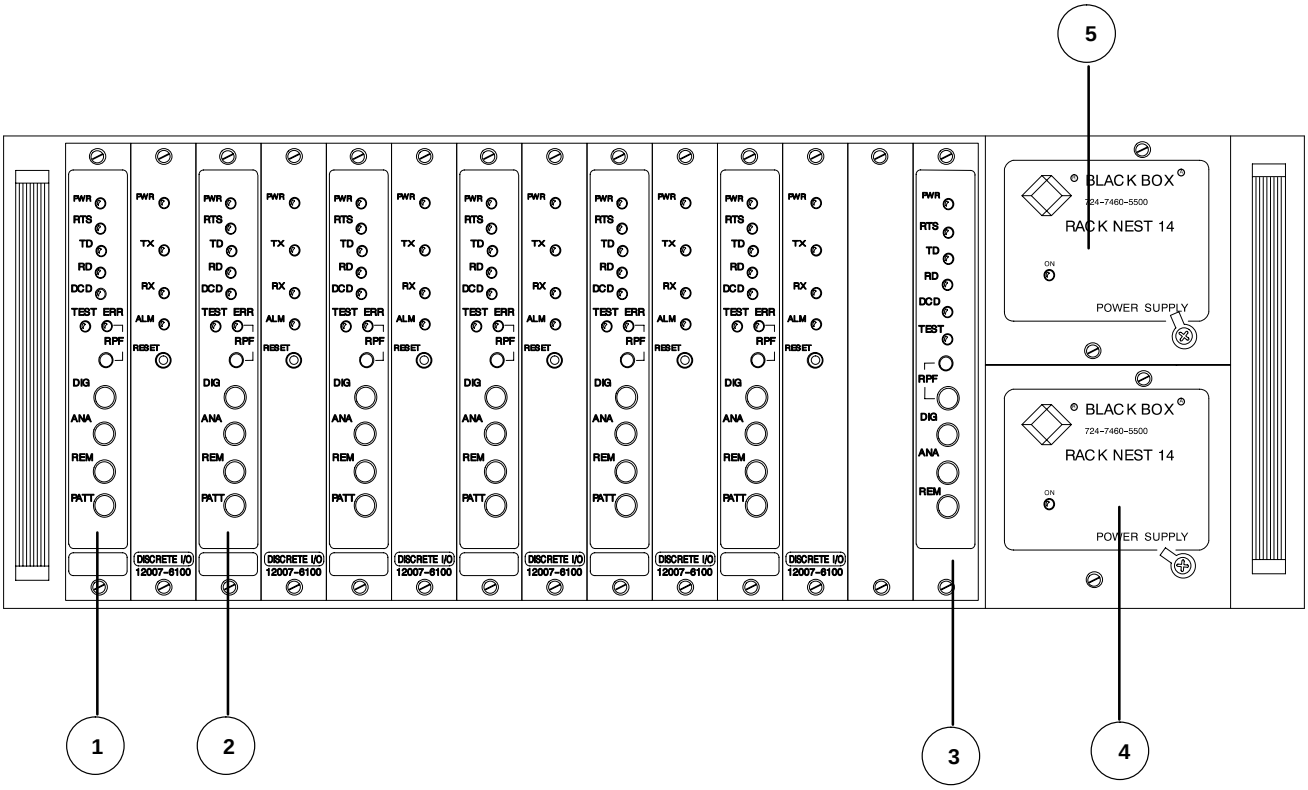

Figure 2-2. VHF Extender Unit

9325-004

9325–004

Table 2-2. VHF Extender Unit Controls, Indicators, and Connectors

Key (Fig 2-2)	Control/Indicator	Function
1	EIA-530 Modem	High Speed Modem
PWR	EIA-530 Modem - LED	Lights Green when modem power is on.
RTS	EIA-530 Modem – LED	Lights Yellow when terminal (DTE) activates the Request-to-Send line.
TD	EIA-530 Modem - LED	Lights Yellow when SPACE is being transmitted. Flickers as data is transmitted.
RD	EIA-530 Modem - LED	Lights Yellow when steady SPACE is being received. Flickers as data is received.
DCD	EIA-530 Modem - LED	Lights Yellow when a valid receive signal is present.

Table 2-2. VHF Extender Unit Controls, Indicators, and Connectors – Continued

Key (Fig 2-2)	Control/Indicator	Function
TEST	EIA-530 Modem - LED	Lights Red when the modem is in any one of the three Loopback modes - DIG, ANA, REM, or when the PATT pushbutton is depressed.
ERR	EIA-530 Modem - LED	Lights Yellow momentarily when PATT switch is activated and then goes out. If there are errors in the test pattern, the LED blinks or remains lit.
RPF	EIA-530 Modem - LED	Lights when there's a power failure in remote standalone unit. May be reset by depressing the red RPT reset pushbutton.
DIG	EIA-530 Modem - LED	The Digital loopback switch causes the local modem to loop received data and clock back to its transmitter. Data set ready will turn off.
ANA	EIA-530 Modem - Pushbutton	The Analog Loopback switch causes the local modem to loop its transmitter output back to its receiver. This Loopback may also be activated from the DTE per V.54, Loop 3- Local Loopback, via pin 18 on the EIA-530 D sub-connector interface.
REM	EIA-530 Modem - Pushbutton switch	The Remote Signal Loopback switch causes the remoted EIA-530 modem to loop received data and clock to its transmitter. Data set Ready will turn off. This loopback may be also activated from the DTE per V.54, Loop 2 – Remote Loopback, via pin 21 on the EIA-530 D sub-connector interface.
PATT	EIA-530 Modem - Pushbutton switch	The pattern switch causes the EIA-530 modem to send and receive a 511-bit test pattern. If errors are encountered by the receiver, the ERR LED will light or flicker. The RD and CTS will turn off. **NOTE** The modem must be set to constant carrier, or if set to switched carrier the RTS signal must be asserted (high) for the test to work.
RPF	EIA-530 Modem - RESET Pushbutton switch	When pushed will reset the ERR LED.
2	Discrete I/O Card	
PWR	Discrete I/O Card - LED	Lights Green when Discrete I/O Card power is on.
TX	Discrete I/O Card - LED	Lights Yellow when transmit discrete line signal is asserted.
RX	Discrete I/O Card - LED	Lights Yellow when receive discrete line signal is asserted.
ALM	Discrete I/O Card - LED	Lights Red when circuit does not receive a valid signal for > 10 ms
RESET	Discrete I/O Card - Pushbutton switch	When pushed, will reset the ALM LED.
3	RS-232 Modem	Low Speed Modem
RTS	RS-232 Modem - LED	Lights Green when RS-232 power is on.
PWR	RS-232 Modem - LED	Lights Yellow when terminal (DTE) activates the Request-to-Send line.
TD	RS-232 Modem - LED	Lights Yellow when SPACE is being transmitted. Flickers as data is transmitted.
RD	RS-232 Modem - LED	Lights Yellow when SPACE is being received. Flickers as data is received.
DCD	RS-232 Modem - LED	Lights Yellow when a valid receive signal is present.

Table 2-2. VHF Extender Unit Controls, Indicators, and Connectors – Continued

Key (Fig 2-2)	Control/Indicator	Function
TEST	RS-232 Modem- LED	Lights Red when the modem is in any one of the three Loopbac k modes DIG, ANA, or REM.
RPF	RS-232 Modem - LED	Lights Red and indicates power failure in remote standalone units. May be reset by depressing the red RPT reset pushbutton.
DIG	RS-232 Modem Pushbutton Switch	Digital Loopback Switch. When pushed, causes the local modem to loop received data and clock back to its transmitter. Data set ready will go low.
ANA	RS-232 Modem - Pushbutton Switch	Analog loopback switch, when pushed will cause the local modem to loop its transmitter output back to its receiver. This loopback may also be activated from the DTE per V.54, Loop 3- Local Loopback, via pin 18 on the RS-232 D sub-connector interface.
REM	RS-232 Modem - Pushbutton Switch	Remote Digital Loopback Switch, when pushed will cause the remote RS-232 modem to loop received data and clock to its transmitter. Data Set Ready will go low. This loopback is also activated from the DTE per V.54, Loop 2 – Remote Loopback, via pin 21 on the RS-232 D sub-connector interface.
RPF	RS-232 Modem - RESET Pushbutton Switch.	When pushed, will reset the RPF LED.
4	Power Supply	115 Vac Power Supply
5	Power Supply	230 Vac Power Supply

2.3 BASIC OPERATION

Before operating, the MX-9325 transceiver and VHF Extender Unit must be installed per Chapter 8 and configured per Chapter 3. The following paragraphs provide basic operating procedures of the MX-9325 Transceiver and VHF Extender Unit.

2.3.1 Initial Settings and Power Up

Initial settings and power up consists of powering up the transmitter and running BIT. Table 2-3 provides the initial settings and power up procedure.

NOTE

The **<enter>** following each command means that an ASCII CR (carriage return) is sent to the transmitter microcontroller which causes the command to be executed.

Table 2-3. Initial Settings and Power Up Procedure

Step	Control	Action	Observe
1	Transmitter rear panel J104 Antenna Connector	Connect Antenna or a 50-Ohm/100 W RF Attenuator.	
2	POWER switch on the PC or terminal.	Place switch in the ON position.	The PC boots or terminal powers on. Refer to the PC or terminal operation instructions for more information.
3		If using a PC, run the desired terminal emulation program. Refer to Chapter 3 Paragraph 3.2.1.	The PC runs the terminal emulation program. Refer to software operation instructions for more information.
4		Ensure that the terminal or terminal emulation program communication parameters are correctly configured, as described in Chapter 3, Paragraph 3.2.1.	Refer to software operation instructions for more information.
5	POWER switch on the transmitter.	Place switch in the ON position.	The front panel AC power indicator LED lights and the PC or terminal displays the initial power up screen. See Figure 2-1. If the PC or terminal does not display the initial power up screen, refer to Chapter 5, Paragraph 5.2.3.
6	PC or terminal keyboard	Type **bit v <enter>**.	The transmitter executes all BIT tests, then displays the results on the PC or terminal. If a BIT fault is detected, refer to Chapter 5 Paragraph 5.2.2.

2.3.2 MX-9325 Transceiver Operation

The MX-9325 Transceiver is operated by means of a VGC. The transceiver's rear panel mounted host port provides the interface. The communications protocol is the LAPB, variant of the HDLC protocol. The VGC is linked to the MX-9325 Transceiver rear panel HOST port for local operation or to the rear panel EXTENDER port for remote or split site (two transceivers used as separate receiver and transmitter) operation via a VHF extender unit. All operations are performed from the VGC using ACARS, Mode 2 and management software packages. Refer to the VGC and software operations manual for operating information.

CHAPTER 3

PROGRAMMING/SETUP

3.1 INTRODUCTION

This chapter provides information required to setup and configure the MX-9325 Transceiver.

The MX-9325 Transceiver should be powered up and pass BIT fault isolation before setup or configuration procedures are performed. Refer to Chapter 2.

3.2 SETUP

The following provides instructions on configuration and setup of the MX-9325 Transceiver. These are generally performed once during installation.

Setup and configuration maintenance commands are performed locally using a PC or ASCII terminal attached to the MX-9325 Transceiver front panel mounted maintenance port.

WARNING

Voltages hazardous to human life are present if Maintenance commands are not performed properly. Failure to preform Maintenance commands properly can cause Injury or death to personnel.

CAUTION

Maintenance commands are intended for maintenance personnel only. Failure to perform maintenance commands properly could cause equipment damage.

The following paragraphs describe access levels, setup and configuration commands performed locally from the MX-9325 Transceiver maintenance port.

3.2.1 Terminal Emulation Software Configuration

The PC running terminal emulation software or the terminal that is connected to the transmitter (rear panel J1 MAINTENANCE connector) must be configured as follows:

- 19,200 baud rate
- 8 data bits
- 1 start bit
- 1 stop bit
- No parity

Refer to the operation documentation supplied with the terminal or terminal emulation software for more information.

NOTE

Ensure that the correct Comm. Port (i.e. Comm. 1) on the PC is selected to correspond with the connection to the MX-9325 Transceiver J1 connector.

3.2.2 Access Levels

The MX-9325 Transceiver can be accessed at the following levels:

- Monitor Level
- Maintenance Level
- Off-line Level

In Monitor level, the maintenance port user can view various radio operational and configuration parameters.

In Maintenance level, the maintenance port user can modify various operational and configuration parameters. All host computers connected through the host port are prohibited from changing any operational and configuration parameters until the maintenance port returns to monitor access. The host port will continue the ability to transmit and receive data in the access level.

In Off–line level, the maintenance port user has the same restrictions as when the user has maintenance level access. In addition, the radio cannot accept data from the host for transmission, and cannot forward to the host port any data that is received off-the-air.

3.2.3 Changing Access Levels

The following paragraphs describe how to change the MX-9325 Transceiver access levels.

3.2.3.1 Monitor Level

To place the MX-9325 Transceiver into Monitor Level, type the following command on the PC/Terminal:

PWD <enter>

3.2.3.2 Maintenance Level

To place the MX-9325 Transceiver into Maintenance Level, type the following command on the PC/Terminal:

PWD Maintenance <enter>

3.2.3.3 Off-line Level

To place the MX-9325 Transceiver into Offline Level, type the following command on the PC/Terminal:

PWD No RF <enter>

3.2.4 Configuration Index

Table 3-1 lists the configuration index for the MX-9325 Transceiver. Column 1 contains the command as would be typed on the PC/Terminal. Column 2 contains the brief descriptions of the command. Columns 3, 4 and 5 contain the access level the command can be performed at. Column 6 contains a reference to the paragraph that describes the command in detail.

Table 3-1. MX-9325 Transceiver Configuration Index

Command	Operation Procedure	Monitor	Maintenance	Off-line	Para-graph
BIT	Display BIT results.	✓	✓	✓	3.2.4.1
FRQ	Display/Modify the current radio operating frequency.	✓	✓	✓	3.2.4.2
HIS	Display a history of PBIT and CBIT faults that have occurred since the last time the historical BIT status word was cleared.	✓	✓	✓	3.2.4.3
HWV	Display the revision of each assembly in the MX-9325 Transceiver.	✓	✓	✓	3.2.4.4
PSU	Display radio power supply voltages.				3.2.4.5
PWD	Change current access level.	✓	✓	✓	3.2.4.6
PWR	Display/Modify the current transmitter output power level.	✓	✓	✓	3.2.4.7
STA	Display the radio operational status.	✓	✓	✓	3.2.4.8
SWR	Display the Voltage Standing Wave Ratio measured during the last transmission.	✓	✓	✓	3.2.4.9
TMP	Display the power amplifier and power supply heatsink temperatures.	✓	✓	✓	3.2.4.10
VER	Display the version identifiers of the active and back-up software images currently resident in the radio.	✓	✓	✓	3.2.4.11
FPW	Display the forward power level of the last transmission.	✓	✓	✓	3.2.4.12
DBT	Display the detailed BIT results for each assembly in the radio.	✓	✓	✓	3.2.4.13
KEY	Display/Modify the current transmitter key state.	✓	✓	✓	3.2.4.14
MDL	Display/Modify the modulation level set point.	✓	✓	✓	3.2.4.15
RPW	Display the reverse power level of the last transmission.	✓	✓	✓	3.2.4.16
TCO	Display/Modify the TCXO adjustment value.	✓	✓	✓	3.2.4.17
TIM	Display/Modify transmitter continuous key time-out interval.	✓	✓	✓	3.2.4.18
SYC	Display/Modify radio system configuration.	✓	✓	✓	3.2.4.19
MOD	Display/Modify current operating mode.	✓	✓	✓	3.2.4.20
TTO	Generate a test tone.		✓	✓	3.2.4.21
MPS	Display/Modify the local maintenance port baud rate and parity settings.	✓	✓	✓	3.2.4.22
DPS	Display/Modify the host data port baud rate setting.	✓	✓	✓	3.2.4.23

Table 3-1. MX-9325 Transceiver Configuration Index – Continued

Command	Operation Procedure	Monitor	Maintenance	Off-line	Para-graph
RST	Reset the radio.	✓	✓	✓	3.2.4.24
CLF	Clear the BIT fault word and detailed BIT fault words for all assemblies.	✓	✓	✓	3.2.4.25
CLH	Clear the historical BIT status word.		✓	✓	3.2.4.26
SEN	Run the receiver sensitivity test.	✓	✓	✓	3.2.4.27
ACC	Display/Modify the Mode 2 maximum number of channel access attempts parameter value.	✓	✓	✓	3.2.4.28
ADL	Display/Modify Mode 2 link level address.	✓	✓	✓	3.2.4.29
PER	Display/Modify the Mode 2 persistence numerator parameter value.	✓	✓	✓	3.2.4.30
TM1	Display/Modify the Mode 2 inter-access delay timer parameter value.	✓	✓	✓	3.2.4.31
TM2	Display/Modify the Mode 2 channel busy timer time-out parameter.	✓	✓	✓	3.2.4.32
CBT	Display/Modify the ACARS channel busy time-out parameter value.	✓	✓	✓	3.2.4.33
UPF	Display/Modify uplink filtering enable/ disable state.	✓	✓	✓	3.2.4.34
DNF	Display/Modify downlink filtering enable/ disable state.	✓	✓	✓	3.2.4.35
RSF	Display/Modify RSSI filtering enable/ disable state.	✓	✓	✓	3.2.4.36
RFT	Display/Modify RSSI filtering threshold value.	✓	✓	✓	3.2.4.37
ACS	Display ACARS or Mode 2 statistics, depending on current mode.	✓	✓	✓	3.2.4.38
CBF	Display/Modify Category B mode filter character.	✓	✓	✓	3.2.4.39
SER	Display/Modify the radio serial number.	✓	✓	✓	3.2.4.40
LPB	Display/Modify the LAP-B parameters.				3.2.4.41
OVN	Display the number of overruns.	✓	✓	✓	3.2.4.42
OVZ	Display the number of overruns and reset the number to zero.		✓	✓	3.2.4.43
PRG	Purge the messages and display the number that were purged.	✓	✓	✓	3.2.4.44
ELP	Display/Modify the print software error log enabled/disabled flag.	✓	✓	✓	3.2.4.45
ERR	Display the software error log.	✓	✓	✓	3.2.4.46
HELP	Display the commands available at the current access level.	✓	✓	✓	3.2.4.47
TVLS	Display the Tx VCO lock state.	✓	✓	✓	3.2.4.48

Table 3-1. Transmitter Operation Index – Continued

Command	Operation Procedure	Monitor	Maintenance	Offline	Para-graph
RVLS	Display the Rx VCO lock state.	✓	✓	✓	3.2.4.49
BFLS	Display the BFO PLL lock state.	✓	✓	✓	3.2.4.50
LOLS	Display the LO PLL lock state.	✓	✓	✓	3.2.4.51

3.2.4.1 BIT – Display Current BIT Results

Display the current BIT fault code in hexadecimal format using the **bit<enter>** command. Refer to Chapter 5, Paragraph 5.2.2 for a list of all BIT fault codes.

3.2.4.2 FRQ – Display or Modify the Current Radio Operating Frequency

Entering the command **frq<enter>** displays the current frequency in Hz.

Entering the command **frq** followed by a **<space>** and a valid frequency value in Megahertz will change the MX-9325 Transceiver operating frequency to the specified value.

If an attempt to change the operating frequency to a value less than 118.000 or greater than 136.975, the MX-9325 Transceiver rejects the command by displaying an error indication on the PC/Terminal, and no change will be made to the operating frequency.

3.2.4.3 HIS – Display a History of BIT Fault Codes

Display a history of BIT fault codes using that have occurred since the last time the BIT status word was cleared using **his<enter>**.

3.2.4.4 HWV - Display the Revision of each Assembly in the MX-9325 Transceiver

Display the character string containing the revision identifiers of each assembly in the MX-9325 Transceiver using **hwv<enter>**. The revision identifiers will be displayed in the following order:

- Digital Processor Board: 12NNN-NNNN-NNX
- Receiver Board: 12NNN-NNNN-NNX
- Exciter Board: 12NNN-NNNN-NNX
- Directional Coupler: 12NNN-NNNN-NNX
- Power Amplifier: 12NNN-NNNN-NNX
- High Voltage Power Supply: 12NNN-NNNN-NNX
- Low Voltage Power Supply: 12NNN-NNNN-NNX

3.2.4.5 PSU – Display MX-9325 Transceiver Power Supply Voltages

Display MX-9325 Transceiver power supply voltages using **psu<enter>**. MX-9325 Transceiver voltages will be displayed in tenths of a volt, for example +5V: 4.9. If any of the power supply voltages are not present in the MX-9325 Transceiver, the corresponding value is displayed as 0 V.

3.2.4.6 PWD – Change Current Access Level

Entering the **pwd** command, followed by the correct level password to access to the Maintenance levels. Refer to Paragraph 3.2.3 correct password.

3.2.4.7 PWR – Display or Change the Current MX-9325 Transceiver Output Power Level

Display the current MX-9325 Transceiver output power level using **pwr<enter>** command.

Change the MX-9325 Transceiver output power level using **pwr** followed by the new value in tenths of a watt. For example, to change the MX-9325 Transceiver to a power output of 15 watts, type **pwr 15.0<enter>**.

3.2.4.8 STA – Display the Radio Operational Status

Entering the command **sta<enter>** displays the MX-9325 Transceiver operational status word in a hexadecimal format.

3.2.4.9 SWR – Displays Voltage Standing Wave Ratio Measured During the Last Transmission

Display the most recently calculated SWR value using **swr<enter>**. The MX-9325 Transceiver displays with a resolution of +/–.1.

3.2.4.10 TMP – Display the Power Amplifier and Power Supply Heatsink Temperatures

Display the current power supply and power amplifier heatsink temperatures using **tmp<enter>** command. The temperatures displays with a resolution of +/–.1 degrees Celsius.

3.2.4.11 VER – Display Active and back-up Software versions

Display the active and back-up software versions stored in the MX-9325 Transceiver memory using **ver<enter>**.

3.2.4.12 FPW – Display the Forward Power Level

Display the MX-9325 Transceiver forward power level of the last transmission using **fpw<enter>**.

3.2.4.13 DBT – Display BIT Results for Each Assembly

Display the MX-9325 Transceiver detailed BIT results for each assembly using **dbt<enter>**.

3.2.4.14 KEY – Display or Change the Current Transmitter Key State

Entering the command **key<enter>** displays the MX-9325 Transceiver's current transmitter key state as either "ON" or "OFF."

Entering the command key followed by a space and either the word "ON" or "OFF" will cause the MX-9325 Transceiver to key or unkey.

3.2.4.15 MDL – Display or Change Modulation Level Set Point

Display the current modulation level set point using the command **mdl<enter>**.

Entering the command **mdl** followed by a space and a **valid modulation present value** in decimal will change the MX-9325 Transceiver modulation level set point.

3.2.4.16 RPW - Display the Reverse Power Level of the Last Transmission

Display the most recently measured reverse power level using the command **rpw<enter>**.

3.2.4.17 TCO - Display or Modify the TCXO Adjustment Value

Display the current MX-9325 Transceivers current TCXO adjustment value using the command **tco<enter>**.

Entering the command **tco** followed by a space and either **+** or **–** will change the TCXO adjustment value to up one step or down one step, respectively.

3.2.4.18 TIM - Display or Modify Transmitter Continuous Key Time-out Interval

This is the maximum number of seconds the transmitter may be keyed continuously before it will automatically unkey.

Display the maximum number of seconds of the transmitter continuous key time-out interval using the command **tim<enter>**.

Entering the command **tim** followed by a space and a **valid time-out value in seconds** will change the continuous key time-out interval.

3.2.4.19 SYC - Display or Modify Radio System Configuration

This defines how the radio is installed and what role it is to play in the communications system it is a part of. The first command parameter defines what type of radio (MX-9325 Transceiver, transmitter, or receiver) the radio will operate as. The second command parameter defines whether the radio talks to the host computer directly through the host data port (Local), or whether it talks to a host computer or another radio via an extender unit through the extender port (Remote). For a radio acting as a transmitter or receiver, it also defines whether the radio is installed as a master radio in a split site configuration, and will be communicating with a remote radio as well as with a host computer.

NOTE

Changing the radio system configuration will cause the radio to reboot.

Display the radio system configuration using the **syc<enter>** command.

The configuration will be displayed in two parts. The first part as either XC, TX or RX to indicate that the radio is acting as a MX-9325 Transceiver, transmitter, or receiver, respectively. The second part as either LOC, MAS or REM to indicate whether the radio is operating in standalone local, split site master, or remote mode, respectively.

Entering the command **syc** followed by a space and either the word **XC**, **TX** or **RX** followed by a space and either the word **LOC, MAS** or **REM** causes the radio to set it's system configuration according to the specified combination.

3.2.4.20 MOD – Display or Modify Current Operating Mode

Display the MX-9325 Transceiver operating mode using the **mod<enter>** command.

Entering the command **mod** followed by a space and either the word "**ACARS**" or "**M2**" will change the MX-9325 Transceiver operating mode to ACARS or MODE 2.

3.2.4.21 TTO – Generate a Test Tone

Internally generate a 1200 Hz test tone, a 2400 Hz test tone, a random sequence of 1200 Hz and 2400 Hz test tones, or a 1 kHz test tone while the transmitter is keyed.

Entering the command **tto** followed by a space and either the word **1000, 1200, 2400** or **RAND** causes the MX-9325 Transceiver to continuously transmit a 1000 Hz, 1200 Hz, 2400 Hz, or a random sequence of 1200 Hz and 2400 Hz tones, respectively.

Entering the command **tto** followed by a space and the word **OFF** causes the MX-9325 Transceiver to terminate any test tone generation and transmission currently taking place. Upon receiving a valid "TTO" command and parameter, the radio displays the action being taken on the PC/Terminal.

3.2.4.22 MPS – Display or Modify the Maintenance Port Baud Rate and Parity Settings

Display the current Maintenance Port baud rate and parity settings using the command **mps<enter>**.

The radio displays the maintenance port configuration in two parts: the first part as a numerical value to indicate maintenance port baud rate, and the second part as either O, E, or N to indicate that the maintenance port is set for Odd, Even, or No parity, respectively.

Entering the command **mps** followed by a space and a **numerical value for the desired baud rate**, followed by a space and either the character **O, E,** or **N** shall cause the radio to set its maintenance port baud rate and parity setting to the specified values.

3.2.4.23 DSP – Display or Modify the Host Data Port Baud Rate Setting

Display the current Host Data Port baud rate setting using **dsp<enter>** command.

Entering the command **dsp** followed by a space and a **numerical value for the desired baud rate**, shall cause the radio to set it's host data port baud rate to the specified value.

3.2.4.24 RST – Reset the Radio

Entering the command **rst<enter>** causes the radio to reset and go through its power-up initialization sequence.

3.2.4.25 CLF – Clear the BIT Fault Word and Detailed BIT Fault Words for all Assemblies

Entering the command **clf**<enter> causes the radio to clear all current faults by resetting all bits in the BIT fault word and in the detailed BIT fault words for each assembly.

3.2.4.26 CLH – Clear Historical BIT Status Word

Entering the command **clh**<enter> causes the radio to clear the fault history by resetting all bits in the historical BIT status word.

3.2.4.27 SEN – Run Receiver Sensitivity Test

Entering the command **sen<enter>** causes the radio to run the receiver sensitivity test.

3.2.4.28 ACC – Display or Modify Mode 2 Maximum Number of Channel Access Attempts Parameter Value

Display the radio Mode 2 maximum number of channel access attempts parameter value using the **acc<enter>** command.

Entering the command **acc** followed by a space and a **numerical value for the desired Mode 2 maximum number of channel access attempts,** causes the radio to set the maximum number of channel access attempts parameter to the specified value.

3.2.4.29 ADL – Display or Modify Mode 2 Link Level Address List

Display the current link level address list, or an indication that the list is empty if there are no addresses in the list using the command **adl<enter>**.

Entering the command **adl** followed by a space and a value representing an address to be added to the list, causes the radio to add the specified value to the address list. If a user attempts to add an address and the list already contains four addresses, the radio will reject the command by displaying an error indication on the PC/Terminal, and no change will be to the link level address list.

Entering the command **adl** followed by a character **'c'** causes the radio to delete all addresses currently in the list and indicate on the PC/Terminal that the list is now empty.

3.2.4.30 PER – Display or Modify the Mode 2 Persistence Numerator Parameter Value

Display the Mode 2 persistence numerator parameter value using the **per<enter>** command.

Entering the command **per** followed by a space and a **numerical value for the persistence numerator value,** causes the radio to set the Mode 2 persistence numerator parameter to the specified value. If changing the Mode 2 persistence numerator parameter outside the range 0 to 255 (inclusive), the radio rejects the command by displaying an error indication on the PC/Terminal, and no change will be made to the persistence numerator parameter.

3.2.4.31 TM1 – Display or Modify the Mode 2 Inter-Access Delay Timer Parameter Value

Display the Mode 2 inter-access delay timer parameter in half-milliseconds using the **tm1<enter>** command.

Entering the command **tm1** followed by a space and a **numerical value for the desired Mode 2 inter-access delay timer in half-milliseconds**, causes the radio to set the inter-access delay timer parameter to the specified value. Changing the Mode 2 inter-access delay timer outside the range 1 to 250 (inclusive), the radio rejects the command by displaying an error indication on the PC/Terminal, and no change will be made to the inter-access delay timer parameter.

3.2.4.32 TM2 – Display or Modify the Mode 2 Channel Busy Timer Time-out Parameter Value

Display the Mode 2 channel busy timer time-out parameter in seconds using the **tm2<enter>** command.

Entering the command **tm2** followed by a space and a **numerical value for the desired Mode 2 channel busy timer time-out value in seconds**, causes the radio to set the channel busy timer time-out parameter to the specified value. Changing the Mode 2 channel busy timer time-out outside the range 6 to 120 (inclusive), the radio rejects the command by displaying an error indication on the maintenance port terminal, and no change will be made to the channel busy timer time-out parameter.

3.2.4.33 CBT – Display or Modify the ACARS Channel Busy Time-out Parameter Value

Display the ACARS channel busy time-out parameter in seconds using the **cbt<enter>** command.

Entering the command **cbt** followed by a space and a **numerical value for the desired ACARS channel busy time-out value in seconds,** causes the radio to set the ACARS channel busy time-out parameter to the specified value. Changing the ACARS channel busy time-out outside the range 6 to 120 (inclusive), the radio rejects the command by displaying an error indication on the PC/Terminal, and no change will be made to the channel busy time-out parameter.

3.2.4.34 UPF – Display or Modify Uplink Filtering Enable/Disable State

Display the current uplink filtering state as either “ON” or “OFF” using the **upf<enter>** command.

Entering the command **upf** followed by a space and either the word **“ON”** or **“OFF”** causes the radio to enable or disable uplink filtering, respectively.

3.2.4.35 DNF – Display or Modify Downlink Filtering Enable/Disable State

Display the current downlink filtering state as either “ON” or “OFF“ using the **dnf<enter>** command.

Entering the command **dnf** followed by a space and either the word **“ON”** or **“OFF”** causes the radio to enable or disable downlink filtering, respectively.

3.2.4.36 RSF – Display or Modify RSSI Filtering Enable/Disable State

Display the current RSSI filtering state as either “ON” or “OFF” using the **rsf<enter>** command.

Entering the command **rsf** followed by a space and either the word **“ON”** or **“OFF”** causes the radio to enable or disable RSSI filtering, respectively.

3.2.4.37 RFT – Display or Modify RSSI Filtering Threshold Value

Display the RSSI filtering threshold parameter value using the **rft<enter>** command.

Entering the command **rft** followed by a space and a **numerical value for the RSSI filtering threshold value,** causes the radio to set the RSSI filtering threshold parameter to the specified value. Changing the RSSI filtering threshold parameter outside the range 0 to 100 (inclusive), the radio rejects the command by displaying an error indication on the PC/Terminal, and no change will be made to the RSSI filtering threshold parameter.

3.2.4.38 ACS - Display ACARS or Mode 2 Statistics

Display the most recently calculated S1 and S2 statistic values when in ACARS using the **acs<enter>** command.

Display the most recently calculated S3 and S4 statistic values when in Mode 2 using the **acs<enter>** command.

3.2.4.39 CBF – Display or Modify Category B Mode Filter Character

Display the current Category B mode filter character using the **cbf<enter>** command.

Entering the command **cbf** followed by a space followed by a **valid Category B mode filter character,** causes the radio to change Category B mode filter character to the specified character.

3.2.4.40 SER – Display the Radio Serial Number

Display the MX-9325 Transceiver serial number using the **ser<enter>** command.

3.2.4.41 LPB – Display or Modify the LAP-B Parameters

Display the Host Port LAP-B parameter values using the **lpb<enter>** command.

Entering the command **lpb** followed by a space and a **numerical value for each of the window size, t1, t2, t4, and n2 values**, causes the radio to set the LAP-B parameters to the specified values.

3.2.4.42 OVN – Display the Number of Overruns

Display the number of overruns using the **ovn<enter>** command.

3.2.4.43 OVZ – Display the Number of Overruns and Reset the Number to Zero

Display the number of overruns and reset the number to zero using the **ovz<enter>** command.

3.2.4.44 PRG – Purge the Messages and Display the Number of Purged Messages

Purge messages and display the number of messages that have been purged using the **ovz<enter>** command.

3.2.4.45 ELP – Display or Modify the Print Software Error Log enabled/disabled Flag

Display the current print software error log state as either “ON” or “OFF” using the **elp<enter>** command.

Entering the command **elp** followed by a space and either the word **“ON”** or **“OFF”** causes the radio to change the current print software error log state.

3.2.4.46 ERR – Display the Software Error Log

Display the current software error log using the **err<enter>** command.

3.2.4.47 HELP – Display the Commands Available at the Current Access Level

Display the commands that are valid at the current access level using the **help<enter>** command.

3.2.4.48 TVLS – Display the Tx VCO Lock State

Display the Tx VCO lock state using the **tvls**<enter> command.

3.2.4.49 RVLS – Display the Rx VCO Lock State

Display the Rx VCO lock state using the **rvls**<enter> command.

3.2.4.50 BFLS – Display the BFO PLL Lock State

Display the BFO PLL lock state using the **bfls**<enter> command.

3.2.4.51 LOLS – Display the LO PLL Lock State

Display the LO PLL lock state using the **lols**<enter> command.

This page intentionally left blank.

CHAPTER 4

FUNCTIONAL DESCRIPTION

4.1 INTRODUCTION

This chapter covers the functional description of the circuitry in the transceiver. Paragraph 4.2 provides a simplified functional description and Paragraph 4.4 provides a detailed transceiver functional description. Paragraph 4.3 provides a detailed extender unit functional description. Refer to Chapter 5 for BIT and troubleshooting information. For parts list and family tree information, refer to Chapter 7, Paragraph 7.4. Refer to Appendix A for the glossary of terms.

4.2 SIMPLIFIED TRANSCEIVER FUNCTIONAL DESCRIPTION

See Figure 4-1. The transceiver contains J1 Host Port for computer interface, digital processor and MSK/D8 modem function, receiver function, Transmitter function, power amplifier, and low pass filter/directional coupler. It operates as a DSB AM MSK data transceiver and a digital data transceiver. As an AM MSK DSB data transceiver, the radio operates according to the ACARS specifications. The transceiver contains an internal MSK modem function providing all modulation/demodulation and CSMA for media access control. As a digital data transceiver, the radio operates in Mode 2 (31.5 kbit per second suppressed carrier Differential 8 Phase Shift Key modulation, CSMA.

4.3 SIMPLIFIED VHF EXTENDER UNIT FUNCTIONAL DESCRIPTION

See Figure 4-2. The VHF Extender Unit contains a EIA-530 Modem and a discrete I/O card required for remote and split site system configurations. A RS-232 Modem is used with an optional Antenna Relay Switch installed.

The Discrete I/O card extends the receiver’s channel busy and the transceiver’s receiver mute differential signal output lines for transceiver operation in split site ACARS and Mode 2. Signal interfaces are extended to the remote site by means of a current loop interface circuit, capable of driving the required maximum length of hard wire lines between sites.

The EIA-530 modem interface is used in the VHF Extender Unit to support the extension of computer to the remote transceiver rear panel host port, or the from a local transceiver to a remote transceiver in split site configuration. The Modem accommodates a variety of digital data interfaces: V.24/RS-232, V/35, X.21, EIA-530, V.36 (RS-449), G.703 and Ethernet.

The EIA-530 modem features V.54 diagnostic capabilities to perform local analog loopback and local and remote digital loopback. The loops can be manually activated from the front panel or via control signals from the interface connector. In addition, the EIA-530 modem incorporates a built-in BERT to enable complete testing of both modems and the intersite line. A front panel switch generates a pseudo-random test pattern (511 bits) according to ITU V.52, for testing end-to-end connectivity. An ERROR LED located on the front or the modem, flashes when a bit error is detected.

The modem’s range at a particular data rate is dependent on the transmission line wire gauge. At a data rate of 192 kbps, 22 AWG wire is sufficient for intersite lines up to 4.5 km in length. Intersite lines of 19 AWG wire are required to support transmission at 192 kbps on lines greater than 4.5 km long. Table 4-1 lists the approximate range of the EIA-530 modem over various gauges of unconditioned transmission line.

The RS-232 modem provides an RS-232D (EIA-232/V.24) digital data interface to the Computer. The RS–232 modem is selected for use in the Extender Units to support the extension of the Antenna Switch Serial Control Port from the local computer to remote site Antenna Switches in Remote Site and Split Site configurations.

The modem's range at a particular data rate is dependent on the transmission line wire gauge. At a maximum data rate of 19.2 kbps, 26 AWG wire is sufficient for intersite lines up to 7.5 km in length. The RS–232 modem features V.54 diagnostic capabilities to perform local analog loopback and local and remote digital loopback. The loops can be manually activated from the front panel or via control signals from the interface connector. Table 4-2 lists the approximate range or the RS-232 Modem over various gauges of unconditional transmission lines.

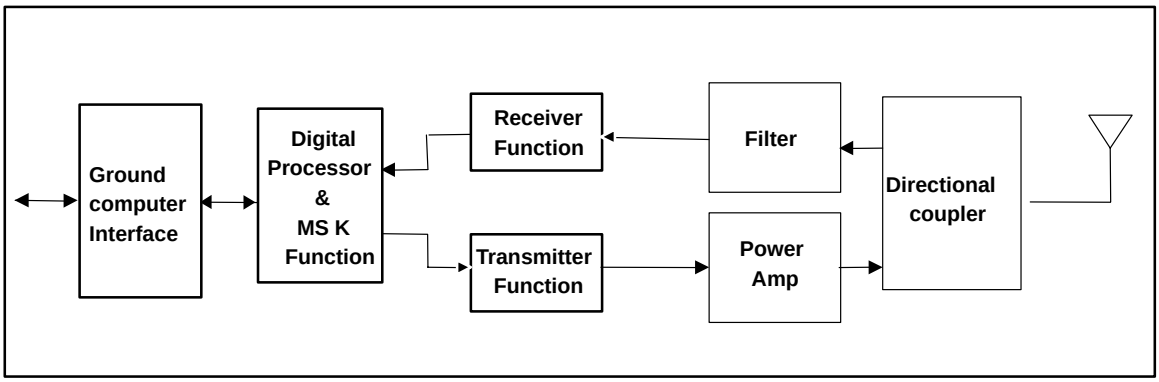

9325-005

Figure 4-1. Transceiver Simplified Block Diagram

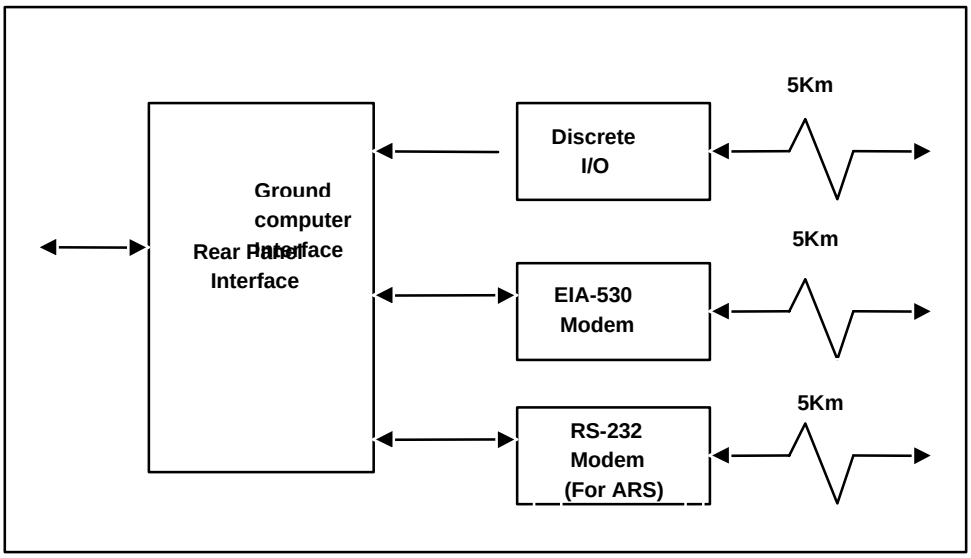

9325-006

Figure 4-2. Extender Unit Simplified Block Diagram

Table 4-1. EIA-530 Modem Approximate Maximum Range

DATA RATE	19 AWG		22 AWG		24 AWG		26 AWG	
	km	miles	km	miles	km	miles	km	miles
192 kbps	6.0	3.7	4.5	2.8	3.5	2.2	2.7	1.7
144 kbps	10.6	6.6	6.75	4.2	4.5	2.8	3.4	2.1
128 kbps	12.4	7.7	7.3	4.5	5.0	3.1	3.6	2.2

Table 4-2. RS-232 Modem Approximate Maximum Range

DATA RATE	19 AWG		24 AWG		26 AWG	
	km	miles	km	miles	km	miles
19.2 kbps	22.5	14	10	6.2	7.5	4.6
14.4 kbps	24.5	15.2	11	6.8	8.2	5.1
9.6 kbps	29	18	13	8	9.5	5.9

4.4 DETAILED TRANSCEIVER FUNCTIONAL DESCRIPTION

The following paragraphs provides detailed functional description of the transceiver. Paragraph 4.4.1 describes the transceiver signal paths. Figures 4-3 through 4-7 shows the transceiver signal path block diagrams.

4.4.1 Transceiver Signal Paths

- Transmit/Receive Data Signal Paths – Paragraph 4.4.2
- Transmit RF Signal Paths - Paragraph 4.4.3
- Receive RF Signal Paths - Paragraph 4.4.4
- Control/Interface Signal Paths – Paragraph 4.4.5
- BIT Signal Path – Paragraph 4.4.6
- Power Distribution – Paragraph 4.4.7

4.4.2 Data/RF/IF Signal Paths

The following paragraphs describe the functions of each assembly as they relate to the transmit and receive signal path through the transceiver.

See Figure 4-3. Data messages enter A1A2 Digital Board PWB Assembly via the rear panel host port, extender port as LAPB Frames.

4.4.2.1 A1A2 Digital PWB Assembly

Data to be transmitted enters A1A2 Digital PWB Assembly Host or extender interface port. The interface port performs level shifting and routes serial data to a Power PC860 microprocessor. The microprocessor performs all required integrity checks then sends data to a DSP which processes the digital data signals. The digital data is then sent to the DAC to be converted to baseband analog. The DAC routes a parallel analog In-phase and Quadrature

(I and Q) audio signal to the exciter interface on A1A2 Digital PWB Assembly where it is sent to A1A3 Exciter PWB Assembly.

In receive mode, the received signal is sent to A1A2 Digital PWB Assembly where the analog baseband signal is converted to digital. The A1A2 Digital PWB Assembly mounted DSP measures the RSSI and implements AGC by controlling the receiver's IF and RF gain. In split site configuration, the DSP monitors the RSSI as reported by local receiver, via the VHF extender unit, interfaces to generate a channel busy signal. The channel busy signal applies the algorithm to the DSP to determine the correct transmission time. The DSP accepts baseband I and Q audio from the receiver's demodulator section and digitally demodulates those signals to generate recovered data. Upon successful receipt of a data burst, the DSP executes any FEC algorithms, if available, and provides the data to the microprocessor. The microprocessor formats the data for delivery to the VGC via A1A2 Digital PWB host or extender interface port.

4.4.3 Transmit RF Signal Path

See Figure 4-4. The following paragraphs describe the Transmit RF Signal path of the MX-9325 Transceiver.

4.4.3.1 A1A3 Exciter PWB Assembly

The A1A3 Exciter PWB Assembly produces a frequency synthesized RF output modulated signal. The I and Q audio signals are amplified and sent to a Vector Modulator Circuit. The modulated RF is sent through a second amplifier then attenuated before leaving A1A3 Exciter PWB Assembly and routed to A1A4A1 Power Amplifier PWB.

4.4.3.2 A1A4A1 Power Amplifier Assembly

The A1A4A1 Power Amplifier Assembly consists of two amplifier stages which amplify the modulated RF signals from A1A3 Exciter PWB Assembly to a level of 25 watts, nominal. The amplified RF signal is sent to A1A5 Low Pass Filter and Directional Coupler PWB Assembly.

4.4.3.3 A1A6 Directional Coupler Assembly

The A1A5 Low Pass Filter and Directional Coupler Assembly contains a low pass filter and antenna switch. The low pass filter provides the required amount of attenuation at harmonics of the transmitter frequency.
The directional coupler is located between the low pass filter and antenna switch, and monitors both forward and reflected power on the antenna feedline. The antenna switch switches the antenna between the power amplifier output and receiver RF input. It consists of a solid-state PIN diode switch using quarter-wave transmission lines to provide isolation between the transmitter output and the receiver input.

4.4.4 Receiver RF Signal Path

See Figure 4-5. The following paragraphs describe the Receive RF Signal Path.

4.4.4.1 A1A5 Low Pass Filter and Directional Coupler Assembly

The transceiver receives RF messages via the J5 antenna port. RF is passed through A1A5 Low Pass Filter and Directional Coupler Assembly and A1A8 Helical Filter Assembly before entering A1A7 Receiver PWB Assembly.

4.4.4.2 A1A7 Receiver PWB Assembly

The A1A7 Receiver PWB Assembly utilizes frequency synthesized oscillators to down convert and demodulate on channel signals to be sent to A1A2 Digital PWB Assembly. The received signal strength voltage is also sent to A1A2 Digital PWB Assembly for processing.

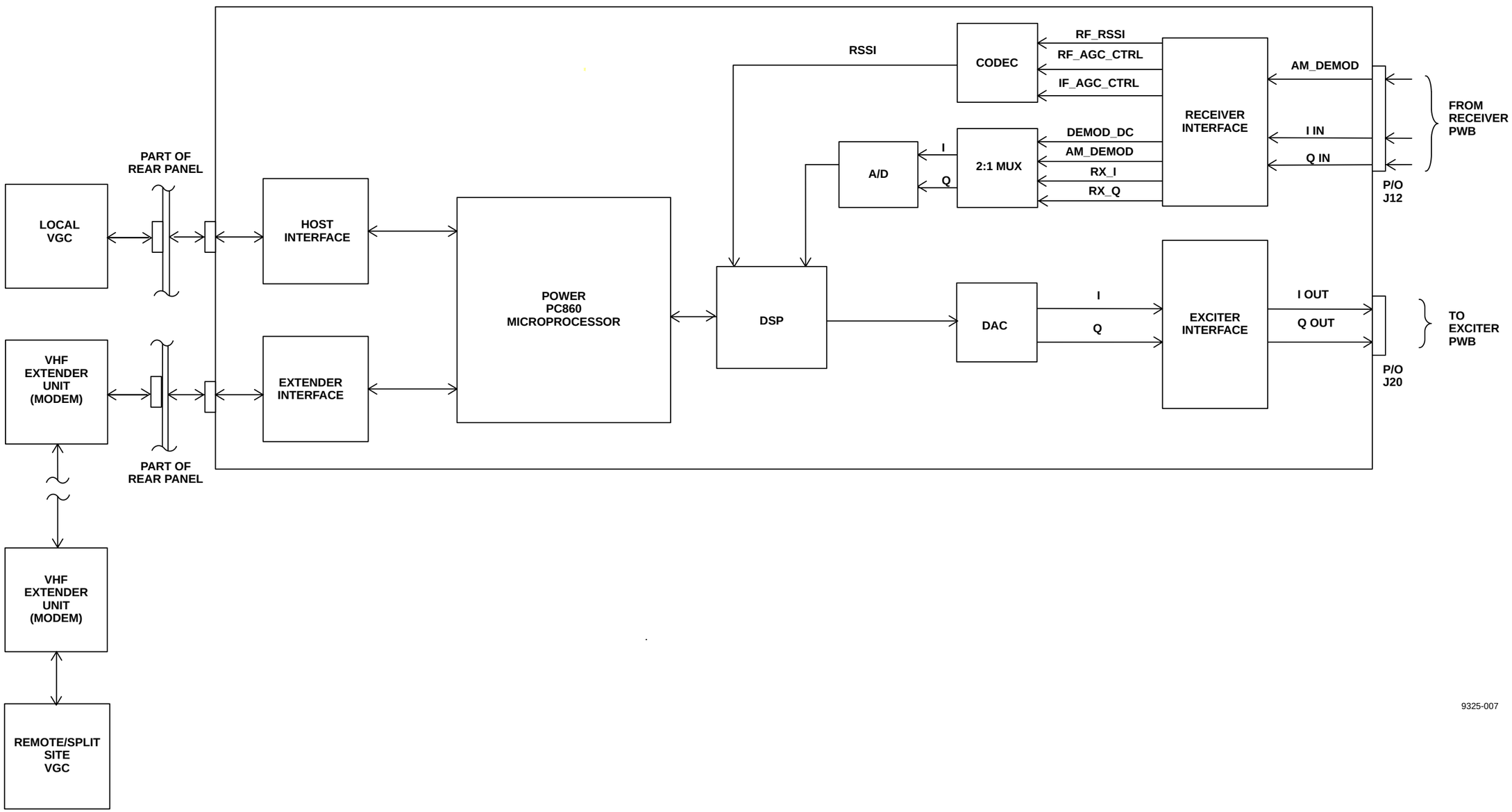

Figure 4-3. Data/Transmit/Recieve Signal Path Block Diagram

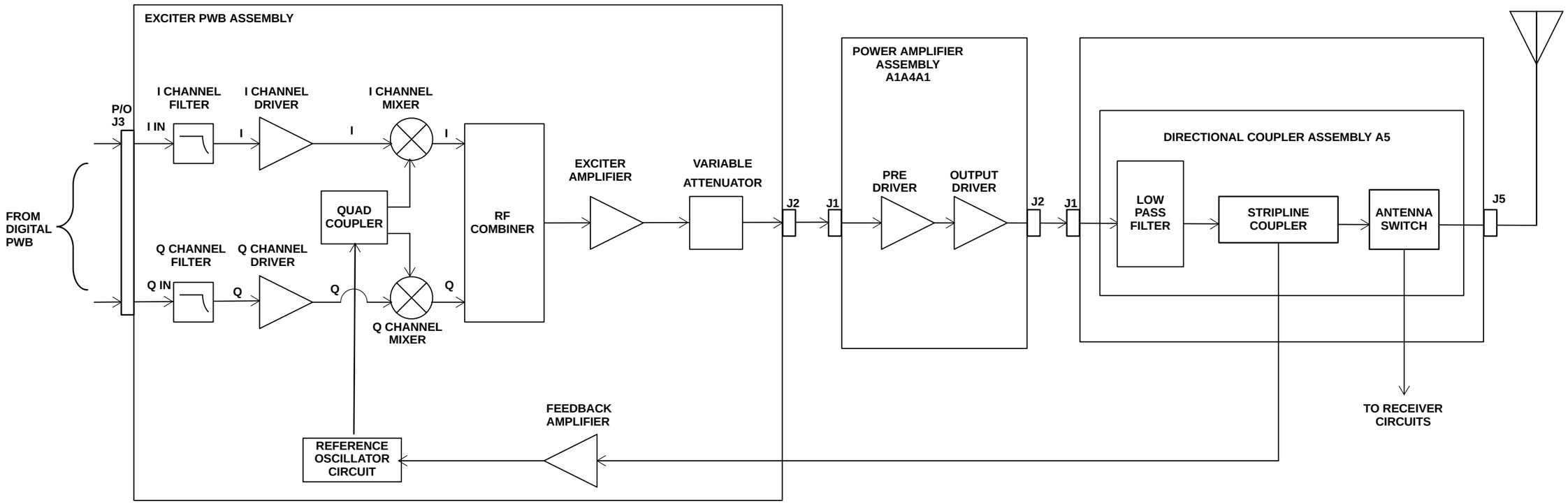

Figure 4-4. Transmit RF Signal Path Block Diagram

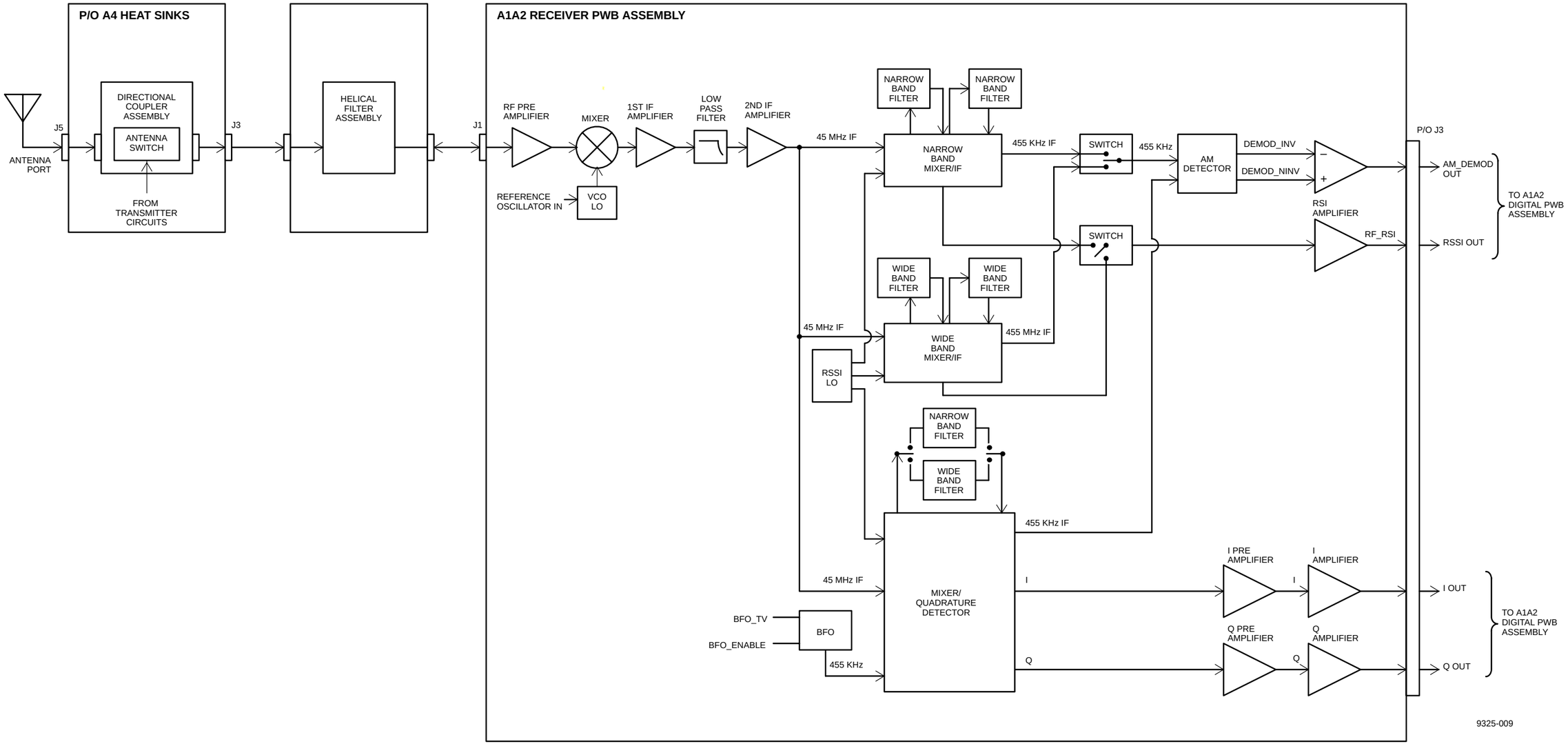

Figure 4-5. Recieve RF Signal path Block Diagram

4.4.5 Control / Interface Signal Paths

See Figure 4-6. This figure illustrates the control paths that exist between the front panel maintenance port, front panel LEDs, rear panel data port, DSP, exciter, receiver, power amplifier, and antenna. The control paths are where the transceiver interacts with an external control terminal in the form of a PC or ASCII terminal. Since no operator controls exist on the transceiver front panel, all control functions for the transceiver originate at the PC or terminal. Control functions include parameter changes and readbacks, BIT and system status.

The following are descriptions of the various types of control that occur within the transceiver. The types of control include the following:

- Front Panel Interface – Paragraph 4.4.5.1
- Internal A1A2 Digital PWB Assembly Functions – Paragraph 4.4.5.2
- A1A3 Exciter PWB Assembly – Paragraph 4.4.5.3
- Power Control Interfaces – Paragraph 4.4.5.4
- Receiver Control Interface– Paragraph 4.4.5.5

4.4.5.1 Front Panel Interface

Front panel interface consists of interfacing the maintenance port to A1A2 Digital PWB Assembly.

The PC or terminal is connected to the transceiver front panel mounted MAINTENANCE connector, an RS-232 port using a standard DB-9 serial connector. Data signals from the PC or terminal enter the transceiver through this port and go directly to A1A2 Digital PWB Assembly. The control software is actually contained in a EEPROM on A1A2 Digital PWB Assembly, allowing transceiver control via a dumb terminal. The control software is accessed by the microcontroller on A1A2 Digital PWB Assembly, decoded, and used to initiate such actions as frequency and bandwidth changes, self-test, and other parameter changes or readbacks. In addition, an A1A2 Digital PWB Assembly mounted light-emitting diodes on the front panel indicate AC power, receive carrier detector, transmit key status and fault.

4.4.5.2 Internal A1A2 Digital PWB Assembly

The A1A2 Digital PWB Assembly controls all functions in the transceiver and provides all interfaces to the rear panel data port. A Flash EEPROM IC contains all software for the processors. At initialization, the microprocessor fetches its operating software from the Flash EEPORM IC and copies it to its external DRAM IC for execution. The microprocessor then initializes the DSP. The DSP operates exclusively from internal memory.

Factory programmed calibration data is fetched during power-on initialization. This data, as well as part number, revision code, manufacturing date and serial number is stored in serially accessed EEPROM devices located on each internal electrical subassembly. A single I^2C bus interconnects these assemblies and the microprocessor. This bus is inactive during normal operation of the transceiver.

Upon system reset, A1A2 Digital PWB Assembly configures all programmable parts of the system (synthesizers, RDACs, etc) as required with data fetched from configuration memory. This memory consists of parameter blocks in the EEPROM, updated when changes are commanded by the host or extender interface port. These devices reside on a software controlled serial bus, which is not used after initialization is complete and remains idle during normal transceiver operation.

During operation, A1A2 Digital PWB Assembly monitors certain diagnostic signals to determine if the transceiver is still capable of operation within specifications. This process is known as BIT. Synthesizer lock detect lines, heatsink temperature, antenna port match and regulated power supply voltages are examples of monitored signals which, when out of tolerance, cause the unit to either reduce transmitter power level or create a

key inhibit condition. A multiplexed eight bit A/D converter connects to the microprocessor for most of the analog BIT functions. The host port is notified of any change in BIT results.

The A1A2 Digital PWB Assembly is the source of the frequency reference for the other subassemblies in the transceiver. A VCTCXO on A1A2 Digital PWB Assembly provides a 14.745 MHz signal which is stable to within 1 ppm over the temperature range. The RDAC provides a means of accurately setting the oscillator frequency and for compensating for crystal aging. The microprocessor controls the RDAC at initialization to fine tune the output frequency. The RDAC value is determined during factory testing, and stored into the Flash Memory IC parameter blocks.

4.4.5.3 A1A3 Exciter PWB Assembly

To perform the transmit function, A1A2 Digital PWB Assembly accepts data conforming to the interface specification from the host port and performs all required integrity checks on the data. The A1A2 Digital PWB Assembly enables circuitry on the exciter and power amplifier assemblies, and monitors the output of the dual directional coupler in order to measure forward and reflected power. The output power level of the transmitter is under control of A1A2 Digital PWB Assembly for ALC purposes. At the conclusion of the transmitted burst, it disables the exciter and power amplifier until transmission is again required. The microprocessor monitors the ‘key confirm’ signal at all times to determine if a failure has enabled unauthorized transmission of RF energy.

4.4.5.4 Power Control Interfaces

The A1A2 Digital PWB Assembly individually controls A1A5 Low Pass Filter and Directional Coupler Assembly mounted antenna switch, PA bias and driver bias and power control attenuator. These functions along with the timing relationship between these signals and the exciter control signals for key up and down are determined by the DSP.

Forward and reflected power samples are input to the DSP for power measurement. The DSP calculates the power and SWR using calibration data stored on the directional coupler assembly and fetched by the microprocessor at power up or reset. It controls the power output level, by changing the attenuation at the exciter level.

A digital signal, key confirm, is derived from the forward power sample and is input to the microprocessor. This input is used to monitor the length of RF transmissions. If a transmission exceeds a fixed value, the microprocessor unilaterally and permanently disables the transmit capability. Two mechanisms exist for disabling transmissions: the microprocessor can disable the transmit VCO via a digital switch, and prevent the DSP from biasing the power amplifier, via the power control interface described above.

The transceiver reports a Stuck Carrier condition on the RF channel when operating in either the ACARS mode or Mode 2. In ACARS mode, a stuck carrier is declared when a carrier signal is detected for more than a configured amount of time. Upon detecting the presence of a carrier for more than this configured time, the transceiver sends an unsolicited response message to the computer via the host port indicating a stuck carrier condition. The transceiver detects the absence of a stuck carrier signal and sends an unsolicited response message to the computer indicating that a stuck carrier condition no longer exists.

In Mode 2, a stuck carrier condition is declared when the configured TM2 timer has expired. Upon the expiration of the TM2 timer, the transceiver shall send an unsolicited response message to the computer indicating timer TM2 has expired and a stuck carrier condition exists. The transceiver determines the absence of a stuck carrier when successful access of the channel occurs. The transceiver sends an unsolicited response message to the computer indicating that a stuck carrier condition no longer exists.

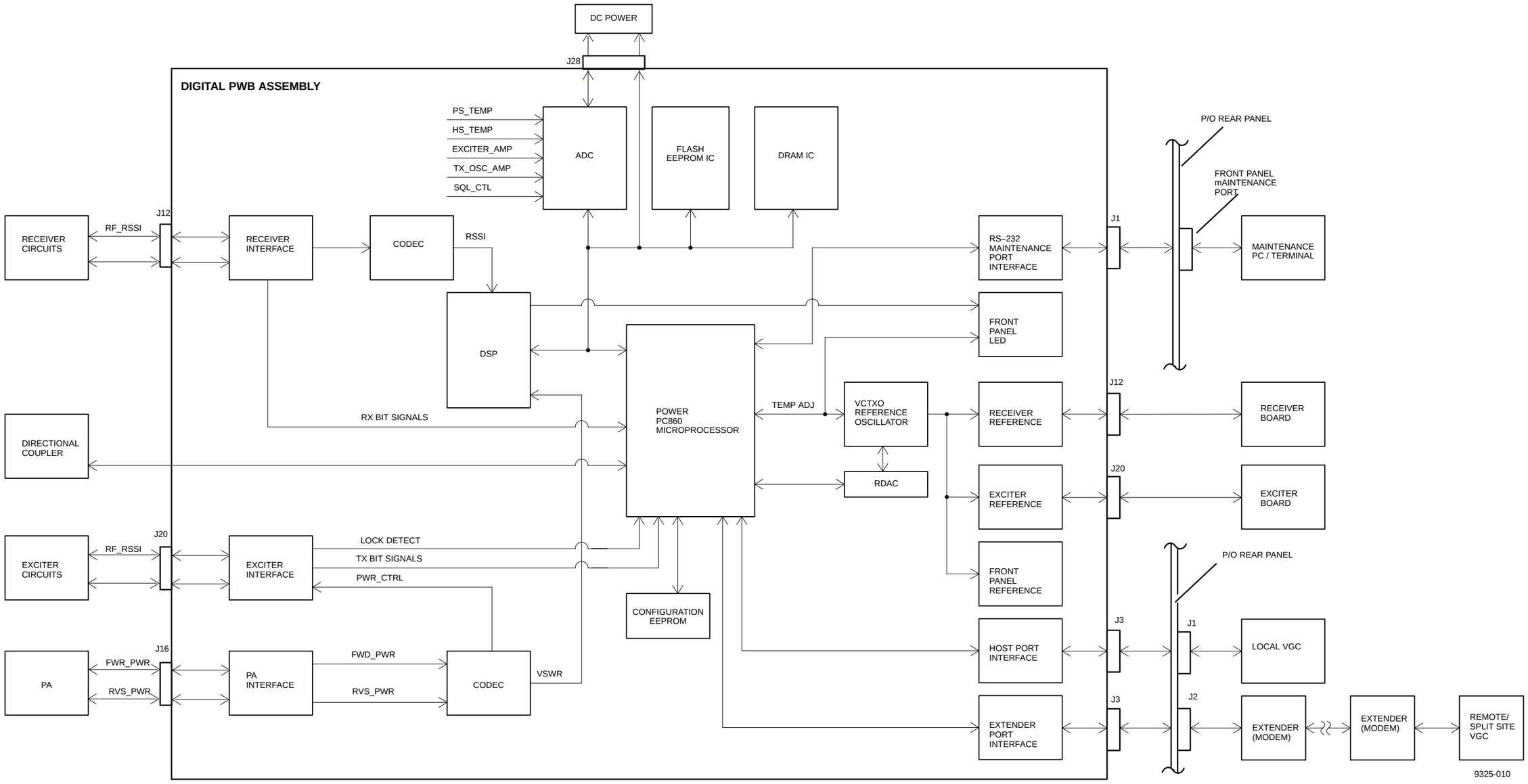

Figure 4-6. Control Signal Path Block Diagram

4.4.5.5 Receive Control Interface

The microprocessor programs the DDS and synthesizer loops with the common software controlled clock and data outputs. Discrete, chip select outputs are provided for each serially programmed device and IF bandwidth select and BFO enable outputs are provided to the receiver. The microprocessor monitors the three synthesizer lock detect lines.

The DSP accepts an RSSI voltage supplied to an A/D converter, and uses D/A converters to control the IF gain and RF attenuator stages for AGC. The bandwidth of the RSSI input is 10.5 kHz. Analog I&Q audio inputs to matched A/D converters are used for D8PSK demodulation. A DC offset voltage for I&Q audio is provided for level shifting purposes. For AM demodulation, the recovered AM signal and a DC voltage proportional to the noise level of the signal is applied to A/D converters. The DSP is responsible for ALC and squelch functions.

4.4.6 MX-9325 Transceiver Built In Test (BIT)

See Figure 4-6. The transceiver executes internal diagnostic testing upon power up and under software command to detect faults and ensure proper operation. BIT activates either remotely or locally via the front panel maintenance interface port. The transceiver reports the results of BIT tests to the PC/Terminal upon operator command either remotely or locally.

The extender unit provides internal diagnostic testing to ensure proper operation. Internal diagnostic testing is applicable to transceivers and extender units in split site and remote site configurations. As part of BIT for split site configuration, the local transceiver will control the loopback function of the transceivers and extender units. The local transceiver reports separate BIT status to the computer via the host port for both the local and remote transceivers.

BIT measures transmitter forward and reflected power in an online mode, as normal transmit traffic.

The transceiver reports to the computer via host port, a high VSWR condition in the BIT fault word response whenever there is a change in the status.

BIT tests receiver sensitivity as part of the power up or initialization sequence. The transceiver has the capability for a commanded receiver sensitivity test. The result of the receiver sensitivity test is reported in the BIT status response.

Table 4-3 lists the BIT performed when the MX-9325 Transceiver is powered on. Refer to Chapter 3 for information on performing a BIT command while the MX-9235 Transceiver is in operation. Refer to Chapter 5 for BIT fault code descriptions.

Table 4-3. MX-9325 Transceiver Power On BIT

BIT Test	Failure Criteria
Memory test	Read/write RAM test fail (critical fault), EEPROM test fail (Boot Fault).
Boot sequence	Software image failed to load correctly.
DC voltage test	Voltage out of tolerance.
EEPROM assembly checks	Configuration information of EEPROM assemblies is invalid.
Synthesizers and oscillators out of lock	Oscillators failed to lock.
Power amplifier bias/RSSI check	No power reading of RSSI.
Receiver sensitivity	Sensitivity is too low.
Interprocessor communications test	Communications with the VGC is lost.
RAM checks	RAM verification checks failed.

4.4.7 MX-9325 Transceiver Power Distribution

See Figure 4-7. Power distribution consists of converting a 85 Vac to 265 Vac input to the various DC voltages required by the transceiver assemblies, as discussed in the following paragraphs.

4.4.7.1 AC Line Voltage Path

85 Vac to 265 Vac enters the transceiver through rear panel mounted connector J1. The AC passes through a line filter and the front panel mounted AC Power Switch (CB1) and goes to A1A4A2 28 Vdc Power Supply. The A1A4A2 28 Vdc Power Supply takes the AC voltage and sends it to a power factor corrector module where it is converted to 300 Vdc, then converted again to +28 Vdc. The +28 Vdc is sent to A1A6 Low Voltage Power Supply where +5 Vdc, +15 Vdc, –15 Vdc and distributed along with +28 Vdc to the transceiver assemblies. A seperate +28 Vdc is also sent directly to A1A4A1 Power Amplifier Assembly.

4.4.7.2 +28 Vdc Path

The +28 Vdc is routed to the following:

- A1A4A1 Power Amplifier Assembly via connector A1A4J1.
- A1A6 Low Voltage Power Supply via connector A1A4J2.

4.4.7.3 +5 Vdc, +15 Vdc, –15 Vdc and +28 Vdc Path

The +5Vdc, +15 Vdc, –15 Vdc and +28 Vdc is routed to the following:

- A1A2 Digital PWB Assembly via connector A1A6J4.
- A1A3 Exciter PWB Assembly via connector A1A6J6.
- A1A4A1 Power Amplifier Assembly via connector A1A6J2.
- A1A5 Low Pass Filter and Directional Coupler Assembly via connector A1A6J9.
- A1A7 Receiver PWB Assembly via connector A1A6J6

4.4.8 Software Download

The MX-9325 Transceiver maintains three non-volatile storage areas called Software Banks, to hold downloaded software data. At any time, two of the banks are considered active and contain valid copies of the MX-9325 Transceiver operating software. This enables the radio to execute the most recent downloaded version of its software, or to switch to a previously downloaded version via instruction from the VGC. The third bank is regarded as inactive and is kept available as a receiving area for the next version to be downloaded. When a MX-9325 Transceiver is shipped from the factory, it contains identical versions of software in all software banks, although only two banks are regarded as containing active software versions.

The software download feature enables the host computer to update software in the MX-9325 Transceiver through the host or Extender interface port. The MX-9325 Transceiver remains fully operational during the software download process. software for all of the various processors inside the MX-9325 Transceiver are sent to the radio bundled as one large package of binary data. Software downloads are stored by the radio into a volatile buffer until the MX-9325 Transceiver has received all of the data and the data’s integrity has been verified.

4.4.9 VHF Extender Unit

The following paragraphs describe the data and control signal paths of the VHF Extender Unit circuit cards. For additional information on the VHF Extender Unit and Modem Cards, refer to Chapter 1 Paragraph 1.5.

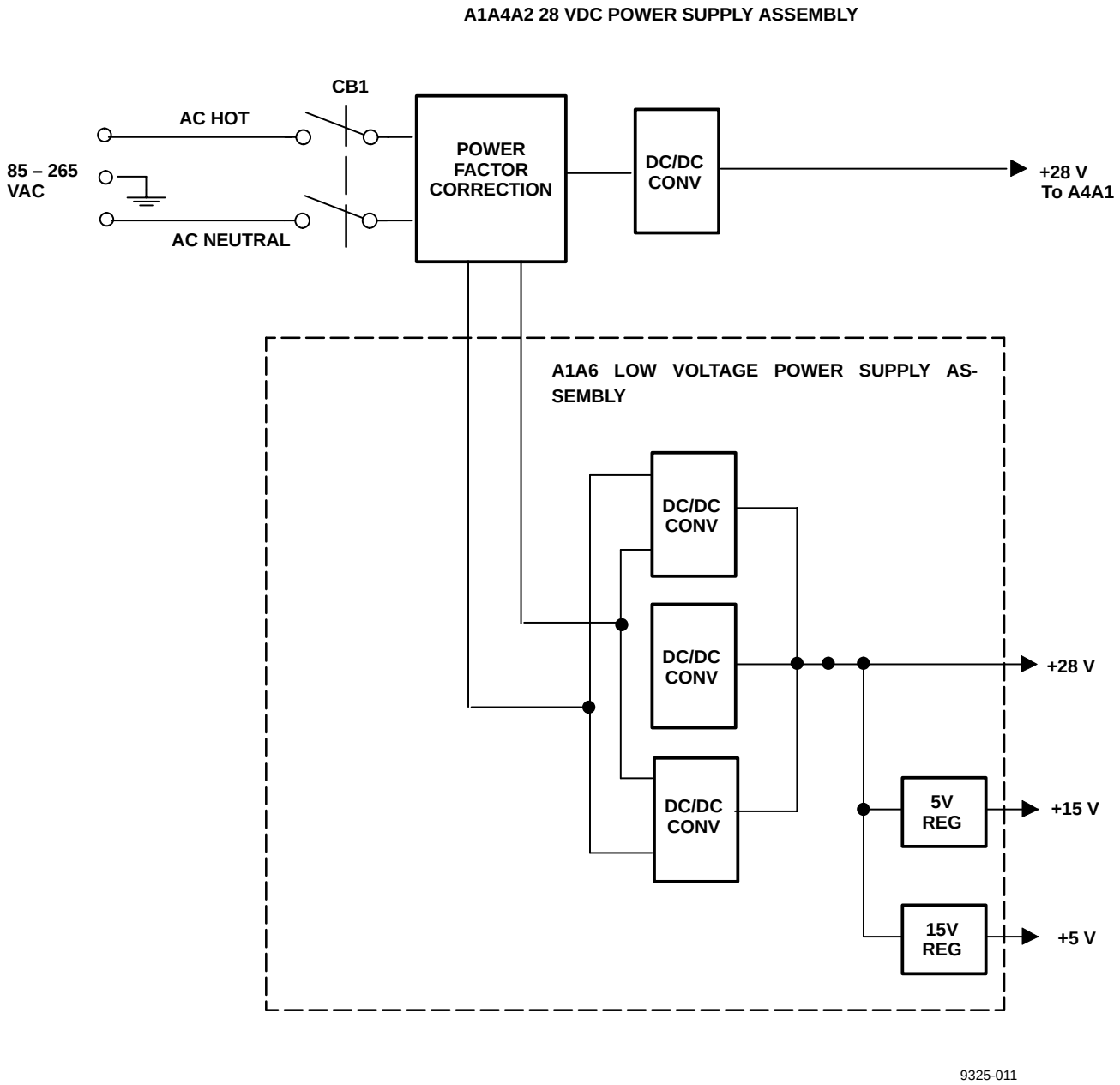

Figure 4-7. Power Distribution Functional Block Diagram

4.4.9.1 EIA-530 Modem

A high speed, short-range synchronous data modem card. The EIA-530 MODEM is utilized to extend the Rear panel mounted Host Port EIA-530 serial data interface between the local site VGC or MX-9325 and remote site MX-9325.

The following paragraphs describe the data signal path of the EIA-530 Modem.

4.4.9.1.1 CDP Encoder/Decoder

The receive signal from the EIA-530 Modem TXD input is sent to the CDP encoder and modulates the data. Similarly, the CDP decoder receives data from the RX input and demodulates the data stream. The encoder/decoder can be configured for 4-wire full duplex or 4-wire half-duplex. Refer to Chapter 8 for configuration information.

4.4.9.1.2 Timing Clock

A timing and clock circuit provides the transmit clock to the CDP encoder.

4.4.9.1.3 Transmit Level

The transmit output signal level is configured from 0 to -6 dBm.

4.4.9.1.4 Receive Circuit

A receive filter attenuates unwanted out-of-band frequency content. The automatic equalizer selects the proper equalization level dependent upon the selected data rate. The AGC provides gain to compensate for transmission line attenuation.

4.4.9.1.5 Asynchronous / Synchronous Converter

The data is transmitted between modems synchronously. If an asynchronous data signal is input to the modem, this circuit provides the conversion to synchronous data in compliance with ITU V.22.

4.4.9.1.6 V.54 Loopback Diagnostics

The V.54 loops are activated whether manually from modem front panel pushbutton or via pins 18 and 21 on the DTE data interface. Pins 18 and 21 adhere to the EIA standard, providing a Type II circuit (EIA-423) bi-polar signal interface to the DTE. The circuits will provide local analog loopback, local digital loopback and remote digital loopback. Either the front panel pushbutton or the DTE interface controls may be disabled via jumper settings. Refer to Chapter 8 for configuration information.

4.4.9.1.7 Test Pattern

The test pattern generator (PATT GENER) facilitates local and remote modem testing with the standard 511 pseudo-random bit pattern. When one of the loopback tests is invoked and the PATT pushbutton on the front panel is activated, the circuit sends and checks the pattern with an internal Bit Error Rate Tester (BERT). If the BERT finds errors, the front panel **ERROR** LED will flicker or remain lit continuously.

4.4.9.1.8 Remote Power Failure (RPF)

This circuit detects an alarm tone transmitted from the remote modem if the remote site power fails. This feature can only be utilized when an EIA-530 Modem is connected to a remote stand-alone version of the modem. It cannot be utilized in the modem while in the extender units.

4.4.9.1.9 EIA-530 Modem power Distribution

The EIA-530 Modem interfaces the VHF Extender Unit chassis via a 44-pin card edge connector. The card receives DC power from the chassis rear panel via the edge connector. The corresponding 5-pin terminal block and 25-pin connector provide the external interfaces to all signals.

4.4.9.2 Discrete I/O Card

The Discrete I/O Card is a plug-in card that resides in alternate, even numbered slots of the extender unit. This card is only required for the extension of Channel Busy and mute signals in split site configurations operating ACARS or Mode 2. It permits a discrete control signal to be sent or received over a dedicated intersite line. There are two (2) sections to the circuit, one transmit and one receive. The transmit circuit converts an RS-422 level input signal to a 20 mA loop interface signal for transmission over twisted pair line in a differential configuration. The receive circuit performs the opposite conversion function, the loop interface circuit is converted to RS-422 level output signals. The loop receive signal from transmission line interface is also differential. The assembly contains an alarm function that activates under a variety of fault conditions, such as: Line Open, Line Short, Absence of RX Signal.

The following paragraphs describe the data signal path of the Discrete I/O Card.

4.4.9.2.1 20mA Loop Transmitter Circuit

A front panel TX indicator (yellow LED) provides polarity status of the transmitting data signal. When the RS-422 (+) input lead is positive with respect to the (–) lead, the LED will light, indicating a 0 or SPACE (ON) condition. The 20 mA loop (+) lead will also be positive with respect to the (–) lead. The discrete control signal (CH BUSY or RX MUTE) state change is applied to the Discrete I/O Card per RS-422 signal standard. The RS-422 signal passes through a RF filter circuit, then is converted to a TTL signal that is formed into a differential 20 mA loop signal. The 20 mA loop signal excursions will not exceed 24 volts. This permits operation over long dedicated transmission lines where loop resistance is measured in 100's of ohms. A current limiting circuit is provided to protect the 20 mA loop transmitter from inadvertent transmission line shorts (either conductor to conductor or conductor to shield). Secondary transient protection is included in the 20 mA loop to reduce external EMI threats.

4.4.9.2.2 20 mA Loop Transmitter Circuit

The Discrete I/O Card provides an RX indicator (green LED) located on the front panel that provides polarity status of the received data signal. When the 20 mA loop (+) lead is positive with respect to the (–) lead, the LED will light, indicating a 0 or space (on) condition present. The RS-422 (+) lead will be positive with respect to the (–) lead. A DIP switch located on the circuit board may be used to reverse the data sense of the receive circuit.

In the event a transmission fault exists (e.g. a shorted or open transmission line) the front panel ALARM LED (red) will light and the alarm relay shall provide an output for remote fault indication. The alarm condition may be reset from the front panel of the Discrete I/O Card or from a remote location via a ground closure input.

Secondary transient protection is applied to the incoming differential 20 mA loop signal to reduce external EMI threats. The incoming 20 mA signal is translated into separate TTL signals for each current direction, the digital signals are logically conditioned so that leading and trailing edges of the signals are clean. The signals representing the differential state are converted into a single TTL signal that may be inverted by way of a DIP switch if desired. The TTL signal is then converted into an RS-422 standard signal. The RS-422 signal passes through RF filtering and to the external world.

The alarm circuitry operates on the TTL output before it is converted to RS-422. The alarm detector is simply an exclusive–OR of the separate TTL signals representing the original differential 20 mA signal. An alarm exists if the TTL levels are the same. This condition will exist if the transmission line is inadvertently open, closed, or it the 20 mA loop transmitter fails. A transient fault must exist for at least 10 ms in order to be passed to the alarm logic. The alarm logic may be reset locally from the front panel of the Discrete I/O Card or from a remote location. A solid-state relay provides a remote alarm interface. This alarm relay may be configured for either a normally open or normally closed fault indication.

4.4.9.2.3 RS-232 Modem (optional)

The RS-232 modem provides an RS-232D (EIA-232/V.24) digital data interface to the VGC. The RS-232 modem is selected for use in the extender units to support the extension of the optional Antenna Switch Serial Control Port from the local computer to remote site antenna switches in remote site and split site configurations.

The RS-232 Short Range Modem operates synchronously/asynchronously at speeds up to 19.2 kbps full or half-duplex over unconditioned lines.

The modem utilizes conditioned differential di-phase modulation (EUROCOM Standard D1) which provides immunity to background noise and eliminates normal line distortion. This modulation scheme enables efficient transmission and reception of serial data over unconditioned twisted pair cable.

The following paragraphs describe the data signal path of the RS-232 Modem.

4.4.9.2.4 CDP Encoder/Decoder

The CDP encoder receives data from the TXD (DTE TX Data) input and modulates the data using the conditional di–phase modulation (CDP) technique. Similarly, the CDP decoder receives data from the (RCV) transmission line interface and demodulates the receive data stream. The encoder/decoder may be configured for 4-wire full duplex or 4-wire half-duplex operation. Refer to Chapter 8 for the proper configuration setting.

4.4.9.2.5 Timing Clock

The modulation timing circuit provides the transmit clock to the CDP encoder. There are four clock sources selectable, dependent upon the mode of operation. The Internal Oscillator (TCX), External Clock (EXT CLK), or RV CLK clock derived from the receive signal apply to synchronous operation, and should not be selected. Instead, the ASYNC setting should be used. Refer to Chapter 8 for the proper configuration setting.

4.4.9.2.6 Asynchronous / Synchronous Converter

The data is transmitted over the lines between modems synchronously. When the asynchronous data signal is input to the modem, this circuit provides the necessary conversion to synchronous data in compliance with ITU V.22. Frequency deviations between the modem and the DTE up to +/– 1.1% are compensated for by lengthening/shortening the stop bit every 8 Async characters (12.5%). For frequency deviations from +/– 1.2–2.3%, the stop bits should be lengthened/shortened every four characters (25%). Refer to Chapter 8 for the proper configuration setting.

4.4.9.2.7 Transmit Level

The transmit output signal (XMT) level may be configured for 0, –3, –6, or –9 dBm. Refer to Chapter 8 for the proper configuration settings.

4.4.9.2.8 Receive Circuit

The Receive Filter attenuates unwanted out-of-band frequency content. The Automatic Equalizer circuit selects the proper equalization level dependent upon the selected data rate. The AGC circuit provides gain to compensate for transmission line attenuation. The AGC operates in one of two modes: continuously ON or controlled by the DCD line. When the DCD line is active, the AGC is active – when the DCD line is inactive, the AGC will remain at its last setting level. Refer to Chapter 8 for the proper configuration setting.

NOTE

For full-duplex point-to-point applications, there is no difference between the Controlled and Continuous AGC modes of operation.

4.4.9.2.9 V.54 Loopback Diagnostics

The V.54 loops are activated either manually from the RS-232 Modem front panel or via pins 18 and 21 of the RS-232 data interface. The circuits will provide Local Analog loopback, Local Digital Loopback and Remote Digital loopback. Either the front panel pushbuttons or the data interface controls may be disabled via jumper settings. Refer to Chapter 8 for proper configuration settings.

NOTE

The V.54 delay jumper must be set to OFF to work for asynchronous operation.

4.4.9.2.10 Remote Power Failure (RPF)

The circuit detects an alarm tone transmitted from the remote modem if the remote site power fails. This feature can only be utilized when the RS-232 modem is connected to a remote stand–alone version of the modem.

4.4.9.2.11 RS-232 Modem power Distribution

The RS-232 Modem interfaces the extender unit chassis via a 44-pin card edge connector. The card receives DC power from the chassis rear panel via the edge connector. The corresponding 5-pin terminal block and 25-pin connector provide the external interfaces to all signals.

This page intentionally left blank.

CHAPTER 5

FAULT ISOLATION

5.1 INTRODUCTION

This chapter provides procedures for fault isolation to the assembly level.

5.1.1 Scope of this Chapter

See Figure 5-1. The procedures presented in this chapter assume that the MX-9325 Transceiver is suspected to have a fault. The maintenance power-on procedure is used to find a fault indication with the unit. If there is a fault without a BIT code displayed, use the non-BIT fault isolation procedures. If there is a BIT fault code, generated by running BIT or during normal operation, use the BIT fault isolation procedure. If a TAP is referenced, perform those procedures. If the problem is not corrected using any of these procedures, use the support data in Chapter 7 based on the functional area of the fault.

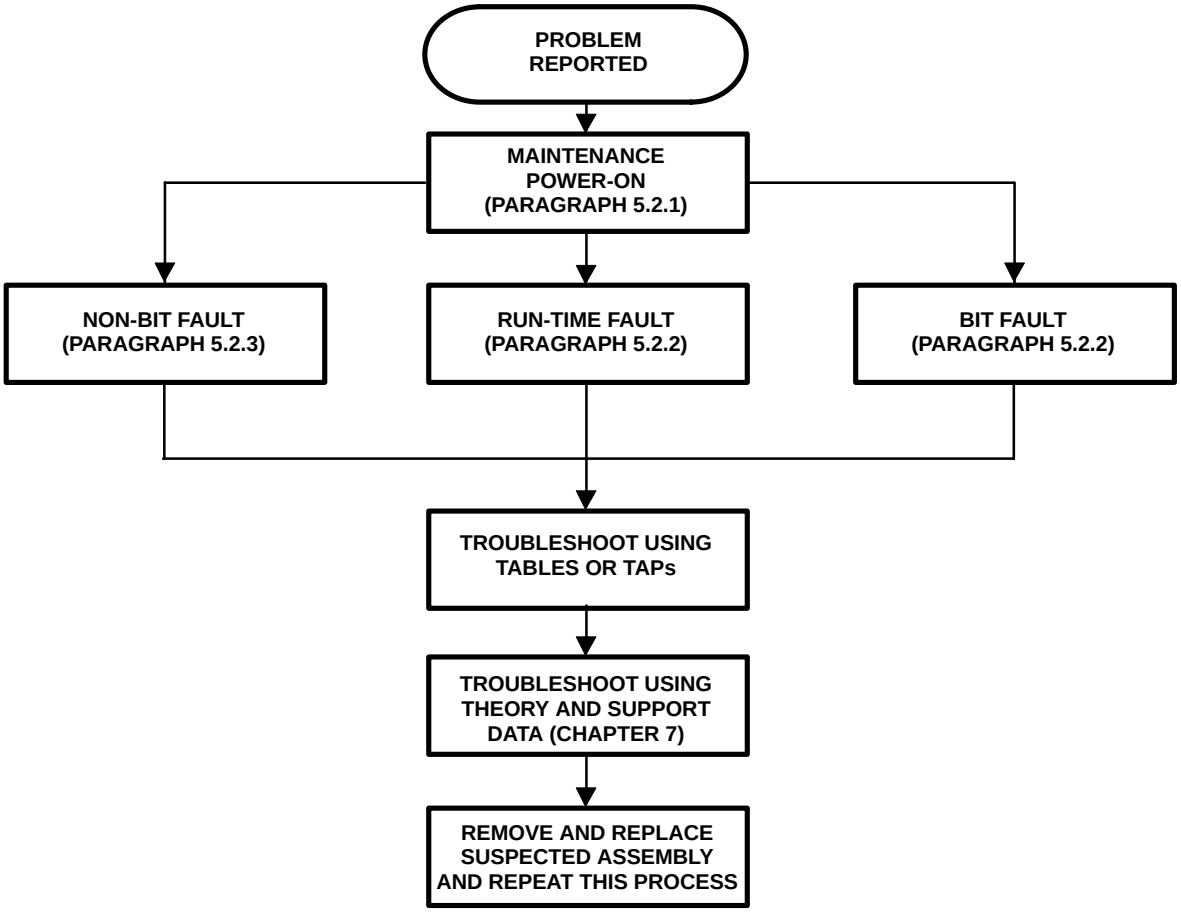

Figure 5-1. Fault Isolation Process Used in this Chapter

5.2 FAULT ISOLATION PROCEDURES

Fault isolation begins with performing the maintenance power-on procedure. The maintenance power-on procedure references the non-BIT and BIT fault isolation procedures. Refer to Paragraph 5.2.1.

5.2.1 MX-9325 Transceiver Maintenance Power-On Procedure

Table 5-1 is the procedure to power on the MX-9325 Transceiver UUT and execute BIT.

Table 5-1. Maintenance Power-On Procedure

Step	Observe	Reference
a. Connect a 50-Ohm RF attenuator to rear panel connector J104.		
b. Place PC or terminal POWER switch in ON position.	The PC boots or terminal powers on.	Refer to PC or terminal operation instructions.
c. If using a PC, run the desired terminal emulation program.	The PC runs the terminal emulation program.	Refer to software operation instructions for more information.
d. Ensure that the terminal emulation software or terminal is correctly configured.		Refer to Chapter 3, Paragraph 3.2.1. Also refer to terminal or emulation software operation instructions.
e. Place POWER switch on MX-9325 Transceiver front panel in the ON position.	The PC or terminal displays the power-up screen. See Figure TBD.	If the PC or terminal does not display the power-up screen, refer to the non-BIT troubleshooting procedures in Paragraph 5.2.3.
f. PC or terminal keyboard, type BIT command: **bit v <enter>**.	If a BIT fault is displayed on the PC or terminal as a result of the BIT command, write down the fault code.	Refer to the BIT troubleshooting procedures in Paragraph 5.2.2.
g. PC or terminal keyboard, type test command: **tst <enter>**.	If no errors occur during BIT, continue operating the radio system in an attempt to generate a run-time fault.	If a run-time fault is generated, refer to the non-BIT troubleshooting procedures in Paragraph 5.2.3. If a BIT fault is generated, refer to the BIT troubleshooting procedures in Paragraph 5.2.2. If no fault is generated, return radio system to operational readiness.

5.2.2 MX-9325 Transceiver BIT Fault Isolation

The MX-9325 Transceiver BIT is a thorough self-test that is run when the MX-9325 Transceiver is powered on. Additionally, the MX-9325 Transceiver runs continuous BIT while the MX-9325 Transceiver is in use.

To display BIT fault codes, execute BIT using the **bit <enter>** command. To Display a text (verbose) description of the BIT fault codes use the **bit v <enter>** command. Refer to Table 5-2 for a complete listing of BIT fault codes.

Table 5-2 lists all the BIT fault codes, fault text, and the suspected cause of the fault. The fault codes listed in Table 5-2 are in the form of hexadecimal readbacks of a binary value. Each code listed is for an individual fault. More than one fault may occur which will result in a combination of fault codes. When this happens, the binary value will be combined to be represented as an equivalent hexadecimal readback.

Example 1: Fault Code [00000014] indicates the Exciter Failure and Directional Coupler Failure.

Example 2: Fault Code [0000000A] indicates the 28 Volt Power Supply Failure and Power Amplifier Failure.

After replacing or repairing the suspected cause of the fault, execute BIT, to see whether the original fault has been eliminated. If the actions do not correct the problem, proceed to the troubleshooting index in Paragraph 7.6.2.

Table 5-2. BIT Fault Codes, Descriptions, and Suspected Assemblies

Fault Code	Fault Text	Suspect SRU (Prioritized)
00000001	Low Voltage Power Supply Failure	AC Input Voltage,A1A4, A1A6
00000002	28 Volt Power Supply Failure	AC Input Voltage, A1A4,A1A6
00000004	Directional Coupler Failure	A1A5, A1A2, Antenna
00000008	Power Amplifier Failure	A1A4,A1A3
00000010	Exciter Failure	A1A3, A1A4, A1A6, A1A2
00000020	Receiver Failure	A1A7, A1A4, A1A6, A1A2
00000040	Digital Processor Failure	A1A2, A1A4, A1A6
00000080	Unused	Unused
00000100	Power Amplifier Heat Sink Low Temp	A1A4, A1A2
00000400	Cooling Fan B	N/A
00000200	Power Amplifier Heat Sink High Temp	A1A4, A1A6, A1A2
00000800	Cooling Fan A	N/A
00001000	Rx Sensitivity Low	Antenna, A1A5, A1A7, A1A2
00002000	Power Supply Heat Sink Low Temp	A1A4, A1A2
00004000	Power Supply Heat Sink High Temp	A1A4, A1A2
00008000	System Boot Error	A1A2

5.2.3 Non-BIT Fault Isolation

Table 5-3 is a list of the non-BIT fault symptoms. Next to the symptom observed is a reference to the recommended action to take. When the recommended action is to remove and replace assemblies, replace the assemblies one at a time in the order listed, testing the UUT (repeat Paragraph 5.2.1) after replacing each assembly. Chapter 6, Table 6-1, references the assembly removal and replacement procedures. When the recommended action is to perform a TAP, proceed to the specified TAP. Refer to Paragraph 5.2.5 for more TAP information. If the actions do not correct the problem, proceed to the fault isolation support data in Chapter 7.

Table 5-3. Non-BIT Fault Symptoms

Symptom Observed	Probable Area	Suggested SRU
MX-9325 Transceiver does not power up.	Power Supply	Proceed to TAP-1. Paragraph 5.2.5.
No RF output	Transmit Signal Path	A1A2, A1A3, A1A4, A1A5
Weak RF output	Transmit Signal Path	A1A2, A1A3, A1A4, A1A5
No Receiver Signal	Receive Signal Path	A1A5, A1A8, A1A7, A1A2
Weak Receiver Signal	Receive Signal Path	A1A5, A1A8, A1A7, A1A2
Loss of PC/terminal control	Data Signal Path	A1A2, PC/Terminal

5.2.4 VHF Extender Unit Diagnostics

The VHF Extender Unit has diagnostics capabilities to perform local analog loopback or local and remote digital loopback. The loopbacks can be manually activated from a front panel pushbutton switch or remotely via a control signal to the rear panel interface connector from the VGC.

The VHF Extender Unit must be properly installed into a system and AC power applied to perform diagnostics. Refer to Chapter 8, Paragraph 8.4.6.

Table 5-4 lists the VHF Extender Unit diagnostic tests and suspected SRU. Refer to Chapter 6, Corrective Maintenance for removal and replacement procedures. Refer to Chapter 2, Paragraph 2.2 for front panel control and indicator descriptions.

Table 5-4. VHF Extender Unit Diagnostic Test

Diagnostic Pushbutton Switch	Observe	Suggested SRU
EIA-530 Modem DIG	TEST LED Blinks Red	EIA-530 Modem, Intersite lines
EIA-530 Modem ANA	TEST LED Blinks Red	EIA-530 Modem, Intersite lines
EIA–530 Modem REM	TEST LED Blinks Red	EIA-530 Modem, Intersite lines
EIA-530 Modem PATT	TEST LED Blinks Red ERR LED Blinks Yellow	EIA-530 Modem, Intersite lines
Discrete I/O Card (no pushbutton present)	ALM Lights Red	Discrete I/O Card, Intersite lines
RS-232 Modem DIG	TEST LED Blinks Red	RS-232 Modem, Intersite lines
RS-232 Modem ANA	TEST LED Blinks Red	RS-232 Modem, Intersite lines
RS-232 Modem REM	TEST LED Blinks Red	RS-232 Modem, Intersite lines

5.2.5 TAPs

TAPs are provided to help the technician isolate faults using procedures other than simple assembly swapping. Each TAP begins with a simple description of the fault or symptom.

When applicable, begin by performing the listed initial checks. These are checks that can be performed without the use of tools or test equipment. If the initial checks do not solve the problem, continue by performing the procedure itself. Assembly and module removal and replacement procedures are located in Chapter 6, Corrective Maintenance. If the problem still exists after completing the TAP, proceed to the fault isolation support data in Chapter 7.

TAP-1: NO POWER

The MX-9325 Transceiver does not power on.

INITIAL CHECKS

- Ensure that AC power is supplied to the MX-9325 Transceiver.
- Ensure that the MX-9325 Transceiver front panel AC power switch is in the on position.

PROCEDURE

Check for the following voltages at the location provided:

- A1A6J4 Pin 1 +28 Vdc
- A1A6J4 Pin 2 +15 Vdc
- A1A6J4 Pin 3 + 5 Vdc
- A1A6J4 Pin 5 +–15 Vdc

Are all voltages present?

Y

Remove and replace A1A2 Assembly. Return unit to operation.

N

Are some of these voltages present?

Y

Remove and replace A1A6 Assembly. Return unit to operation.

N

Disconnect power connector A1A4A2J3 to A1A4A2 Power Supply Assembly. Check cable for the following voltages:

- 87 to 230 Vac – Pins 3 and 4

Is voltage present?

Y

Remove and replace A1A4 Assembly. Return unit to operation.

N

Disconnect power connector A1A4A2J3 to A1A4A2 Power Supply Assembly. Check cable for the following voltages:

- 87 to 230 Vac – Pins 1 and 2

Is voltage present?

Y

Remove and replace CB1 on Front Panel Assembly. Return unit to operation.

N

Remove and replace AC input cable. Return unit to operation.

This page intentionally left blank.

CHAPTER 6

MAINTENANCE

6.1 INTRODUCTION

This chapter provides the maintenance procedures for the MX-9325 Transceiver. Paragraph 6.2 provides preventive maintenance procedures. Paragraph 6.3 provides scheduled maintenance procedures. Paragraph 6.5 provides corrective maintenance which includes adjustment and alignment procedures and assembly removal and replacement procedures. The MX-9325 Transceiver assemblies are listed in Table 6-1 with a reference to the corresponding removal and replacement procedure paragraph. For parts list and family tree information, refer to Chapter 7, Paragraph 7.4.

Table 6-1. MX-9325 Transceiver Assembly Removal and Replacement Paragraph References

SRU Name	Paragraph Reference
MX-9325 Transceiver	6.5.1
A1A2 Digital PWB Assembly	6.5.2
A1A3 Exciter PWB Assembly	6.5.3
A1A4 Heatsink Assembly	6.5.4
A1A5 Low Pass Filter & Directional Coupler Assembly	6.5.5
A1A6 Low Voltage Power Supply Assembly	6.5.6
A1A7 Receiver PWB Assembly	6.5.7
A1A8 Helical Filter Assembly	6.5.8

Table 6-2. VHF Extender Unit Assembly Removal and Replacement Paragraph References

SRU Name	Paragraph Reference
VHF Extender Unit	6.5.9
VHF Extender Unit Circuit Card	6.5.10

NOTE

If a product has been fielded for several years, there is the possibility of firmware incompatibility between new replacement assemblies and an older unit. If unsure of compatibility, contact Harris RF Communications customer service department (tel: 716-244-5830).

6.2 PREVENTIVE MAINTENANCE

No periodic (preventive) maintenance or electronic adjustments are required for the MX-9325 Transceiver or VHF Extender Unit. All that is recommended is periodic cleaning and inspection.

6.2.1 List of Preventive Maintenance Procedures

Table 6-3 lists the preventive maintenance procedures recommended for the MX-9325 Transceiver and VHF Extender Unit. The table is divided into the following columns:

a. Column 1 – Paragraph Number, where the procedure begins.

b. Column 2 – Preventive Maintenance Procedure, describes the test to be performed.

c. Column 3 – Periodicity, interval in which the procedure should be performed (that is; daily, weekly, monthly, etc.).

Table 6-3. Preventive Maintenance Procedures

Paragraph Number	Preventive Maintenance Procedure	Periodicity
6.2.2	Clean and inspect chassis exterior.	Semi-annual
6.2.3	Clean and inspect chassis interior.	During repair

6.2.2 Clean and Inspect Chassis Exterior

Refer to Chapter 7, Paragraph 7.3 for a list of tools and materials. Perform the following procedure to clean and inspect the MX-9325 Transceiver exterior:

WARNING

Failure to remove electrical connections from the unit can cause injury or death to personnel.

NOTE

When the MX-9325 Transceiver is supplied as part of a system, the system documentation takes precedence.

a. At MX-9325 Transceiver front panel, verify power switch is in the OFF position.

b. Disconnect AC power at the source.

c. Inspect MX-9325 Transceiver exterior for:

1. Physical damage
2. Loose hardware including knobs and switches
3. Accumulated dust and/or other foreign matter

d. Use a clean lint-free cloth (Item 10) to wipe exterior surfaces.

e. Connect AC power at the source.

6.2.3 Clean and Inspect Chassis Interior

Refer to Chapter 7, Paragraph 7.3 for a list of tools and materials. Perform the following procedure to clean and inspect the MX-9325 Transceiver interior before and during repair:

WARNING

Failure to remove electrical connections from the unit could cause injury or death.

a. Use a flat-tip screwdriver (Item 1) to remove the (9) screws that secure MX-9325 Transceiver top cover to chassis. Remove the top cover.

b. Use service-vacuum cleaner (Item 11) to remove any accumulated dust from the chassis interior.

c. Inspect MX-9325 Transceiver interior for:

   1. Foreign matter
   2. Discolored or scorched components
   3. Loose or damaged circuit cards or connectors
   4. Moisture
   5. Stripped threaded holes

d. Replace MX-9325 Transceiver top cover. Use a flat-tip screwdriver (Item 1) to replace the nine (9) screws that secure exciter top cover to chassis.

6.3 SCHEDULED MAINTENANCE

The following provides scheduled maintenance for the MX-9325 Transceiver. Scheduled maintenance should be performed annually upon completion of a service task. All scheduled maintenance procedures should pass test before the MX-9325 Transceiver is put back into operation.

6.3.1 Scheduled Maintenance Procedure List

Table 6-4 lists the scheduled maintenance procedures recommended for the MX-9325 Transceiver. The table is divided into the following columns:

a. Column 1 – Paragraph Number, where the procedure begins.

b. Column 2 – Scheduled Maintenance Procedure, describes the test to be performed.

c. Column 3 – Periodicity, interval in which the procedure must be performed (that is, daily, weekly, monthly, annually, etc.).

Table 6-4. Scheduled Maintenance Test Procedures

Paragraph Number	Scheduled Maintenance Test Procedure	Periodicity
6.4.1	BIT	Annually
6.4.2	LED Test	Annually
6.4.3	Rx Sensitivity and Distortion	Annually
6.4.4	Tx Power Output and Distortion	Annually
6.4.5	Tx 2:1 VSWR Load	Annually
6.4.6	Tx Time–out	Annually
6.4.7	Tx Spurious Suppression	Annually

6.3.2 Recommended Test Equipment

Refer to Chapter 7, Table 7-2 for a list of recommended test equipment to perform scheduled maintenance test procedures.

NOTE

Most test functions can be performed by a communications test set, or service monitor, which performs the combined functions of RF and audio signal generator, frequency counter, modulation analyzer, and RF wattmeter. Service monitors are typically equipped with an input attenuator pad/dummy load that allows the full output of the MX-9325 Transceiver to be coupled directly to the instrument. If this feature is not provided, a separate pad/dummy load will be required. Separate instruments can also be used, but this is usually not practical for field work. Suitable service monitors are manufactured by Hewlett Packard, the IFR Division of Regency, Inc., and Marconi Instruments Ltd.

NOTE

The frequency measuring instrument (counter, etc.) must have a high stability time base (better than 0.1 ppm) to ensure accuracy. Do not attempt to set the reference frequency unless the test equipment conforms.

6.4 SCHEDULED MAINTENANCE PROCEDURES

The following paragraphs contain information about tests to be performed on a MX-9325 Transceiver as part of scheduled maintenance.

6.4.1 MX-9325 Transceiver BIT Test

The following paragraphs provide instructions for performing the MX-9325 Transceiver BIT test as part of scheduled maintenance.

6.4.1.1 Required Equipment

The following equipment is required to perform the power output test:

- PC or ASCII Terminal

6.4.1.2 Test Procedure

Perform the following procedure to perform the MX-9325 Transceiver BIT test:

a. Set up the radio system as shown in Figure 6-1.

b. Use PC/terminal to set MX-9325 Transceiver UUT frequency to 127.000 MHz.

c. On PC/terminal enter **his** command to display the history of all BIT faults codes which have occurred since the last time the historical BIT status word was cleared.

d. On PC/terminal enter **dbt** command to obtain detailed BIT results for each assembly in the radio.

e. If any of the detailed BIT results are non–zero, refer to Chapter 5, Paragraph 5.2.2 for BIT fault isolation.

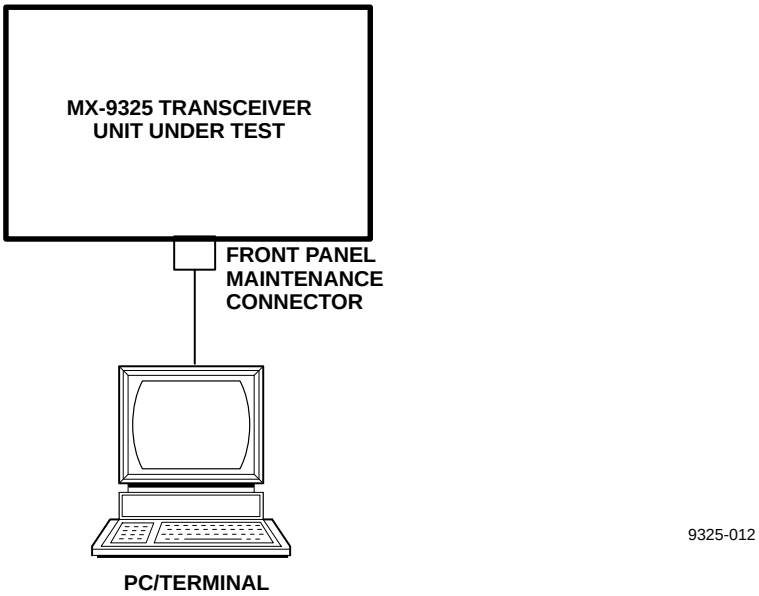

Figure 6-1. MX-9325 Transceiver BIT Test Set Up

6.4.2 MX-9325 Transceiver LED Test

The following paragraphs provide instructions for performing the MX-9325 Transceiver LED test as part of scheduled maintenance.

6.4.2.1 Required Equipment

The following equipment is required to perform the MX-9325 Transceiver LED test:

- Signal Generator
- PC or ASCII Terminal

6.4.2.2 Test Procedure

Perform the following procedure to test the MX-9325 Transceiver front panel LEDs:

a. Set up the radio system as shown in Figure 6-2. Refer to Chapter 3, Paragraph 3.2.4 for command information.

b. Verify that the AC POWER LED lit when the power switch was turned on.

c. Apply a –60 dBm receive signal to the J5 antenna port.

d. Verify that the RECEIVE LED lit.

e. On PC/terminal, enter **key on** command to key the MX-9325 Transceiver.

f. Verify that the TRANSMIT LED lit.

g. On PC/terminal, enter **key off** command to unkey the MX-9325 Transceiver.

h. Remove the MX-9325 Transceiver bottom cover.

i. Simulate a critical fault by removing the coaxial cable from J21 on the A1A2 Digital PWB Assembly.

j. Verify that the FAULT LED lit.

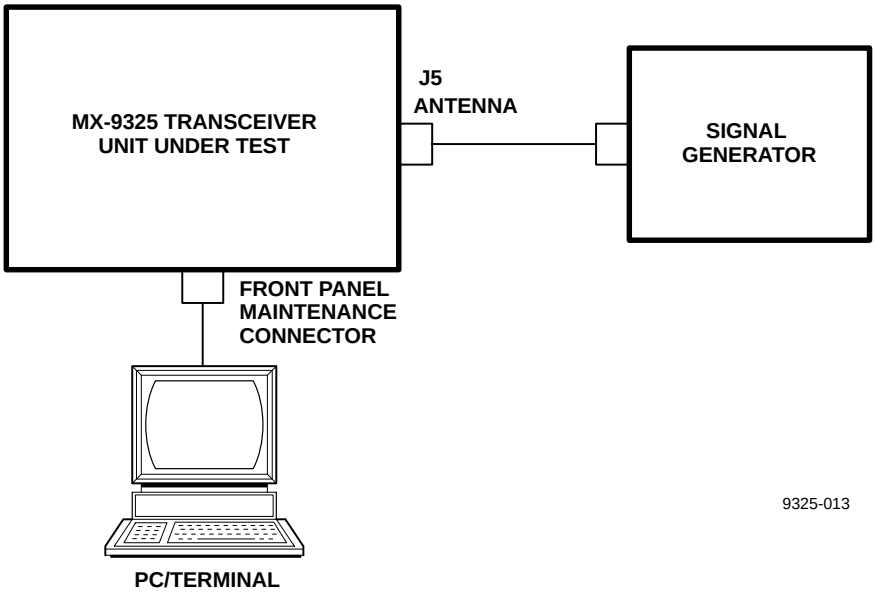

Figure 6-2. MX-9325 Transceiver LED Test Set Up

6.4.3 Receive Sensitivity and Distortion Test

Performs a series of receive sensitivity tests by reading the SINAD at a single specified drive level.

The following paragraphs provide instructions for performing the Receive Sensitivity and Distortion test as part of scheduled maintenance.

6.4.3.1 Required Equipment

The following equipment is required to perform the Receiver Sensitivity and Distortion test:

- RF signal generator
- 30 dB attenuator

6.4.3.2 Test Procedure

Perform the following procedure to test the MX-9325 Transceiver: Receive Sensitivity and Distortion

a. Set up the radio system as shown in Figure 6-3. Refer to Chapter 3, Paragraph 3.2.4 for command information.

b. Configure the audio analyzer to measure SINAD.

c. Use PC/terminal **frq** command to set MX-9325 Transceiver to receive AM at a test frequency of 127.500 MHz .

d. Set the signal generator to the test frequency with AM modulation of a 1 kHz tone at 30% modulation.

e. Adjust the signal generator to provide –99.0 dBm at the antenna port of the MX-9325 Transceiver (accounting for path loss through the attenuator, cables, and switches).

f. Measure the SINAD on the audio analyzer. The measurement should be > or = 10 dB.

g. Adjust the signal generator to –60.0 dBm (at the antenna port of the MX-9325 Transceiver) and measure the distortion on the audio analyzer.

h. Measure the distortion on the audio analyzer. The measurement should be <5 dB.

i. Repeat Steps c through h using test frequencies of 118 MHz and 136.975 MHz.

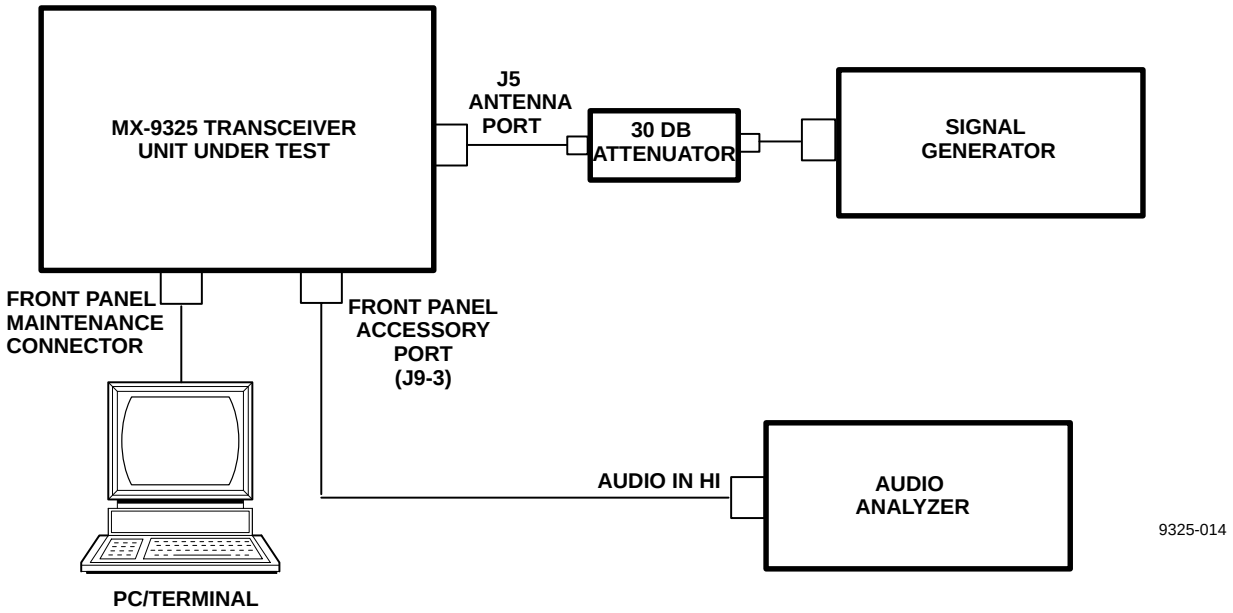

Figure 6-3. MX-9325 Transceiver Receive Sensitivity and Distortion Test Set Up

6.4.4 Transmit Power Output and Distortion

Performs a series of tests of transmit power output level, percent modulation, and distortion at various carrier frequencies.

The following paragraphs provide instructions for performing the Transmit Power Output test as part of scheduled maintenance.

6.4.4.1 Required Equipment

The following equipment is required to perform the percent modulation test:

- 30 dB, 50-Ohm Attenuator
- RF Power Meter
- Modulation Analyzer
- PC or ASCII Terminal

6.4.4.2 Test Parameters

The following are the power outputs to be tested:

- Power Output at high power mode, 25 Watts ±5%

- Power Output at medium power mode, 10 Watts ±5%
- Power Output at low power mode, 2 Watts ±5%

6.4.4.3 Test Procedure

The Transmit Power Output and Distortion Tests are done at high power mode using carrier frequencies at 118.0 MHz, 126.9 MHz, 127.1 MHz and 136.975 MHz.

The Transmit Power Output and Distortion Tests are done at medium and low power mode using a carrier frequency at 136.975 MHz. only.

Perform the following procedure to test the Transmit Output Power and Distortion of the MX-9325 Transceiver:

a. Set up the radio system as shown in Figure 6-4. Refer to Chapter 3, Paragraph 3.2.4 for command information.

b. Use PC/terminal enter **frq** command to set the frequency of the MX-9325 Transceiver to 136.975 MHz.

c. Use PC/terminal enter **mod acars** command to set MX-9325 Transceiver UUT to transmit AM.

d. Use PC/terminal enter **pwr** command to set MX-9325 Transceiver UUT to transmit the specified power.

e. Use PC/terminal enter **mdl 50** command to set MX-9325 Transceiver UUT to transmit the operating frequency with 50% modulation of the 1 kHz internal test tone.

f. On PC/terminal, enter **key on** command to key the MX-9325 Transceiver.

g. Measure the power level (in dBm) from the power meter, and correct for the directional coupler and cable loss to calculate the power output directly at the antenna port.

h. On the modulation analyzer, measure the actual AM percent modulation of the radio's transmission and verify measurement is ±5% at 50% AM modulation.

i. On the audio analyzer, measure the distortion of the demodulated audio output of the modulation analyzer and verify measurement is < 5%.

j. If the modulation appears distorted, check power supply voltages.

k. If distortion is still present, replace A1A4 Heatsink Assembly, then A1A3 Exciter PWB Assembly, and A1A2 Digital PWB Assembly.

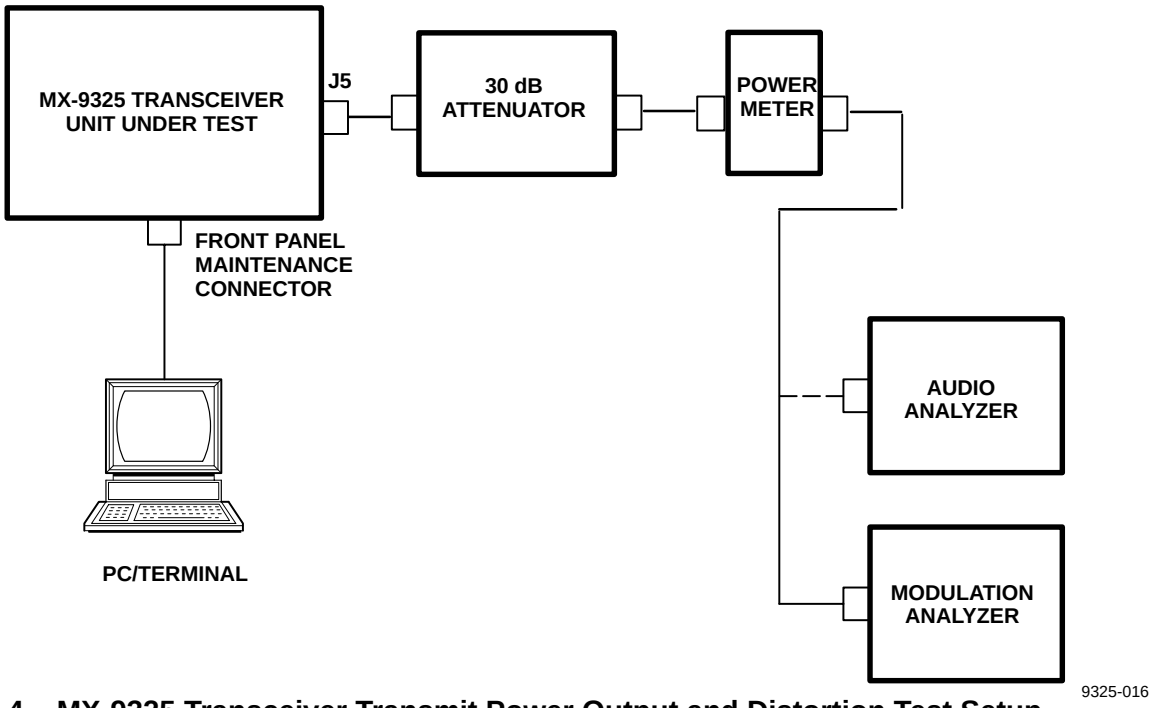

Figure 6-4. MX-9325 Transceiver Transmit Power Output and Distortion Test Setup

6.4.5 MX-9325 Transceiver VSWR Load

Verifies performance of the MX-9325 Transceiver into a load with a 2:1 VSWR and verifies the radio's internal directional coupler by reading back the forward and reflected power.

The following paragraphs provide instructions for performing the MX-9325 Transceiver VSWR load test as part of scheduled maintenance.

6.4.5.1 Required Equipment

The following equipment is required to perform the MX-9325 Transceiver VSWR load test:

- RF Power Meter
- Audio Analyzer
- Modulation Analyzer
- 50 Ohm Load
- 50 Ohm Attenuator
- BNC T Connector
- PC or ASCII Terminal

6.4.5.2 Test Procedure

Perform the following procedure to test the VSWR Load of the Transceiver:

NOTE

The 2:1 load is constructed by connecting a 50 ohm attenuator and a 50 ohm load together with a BNC T. To present an effective 25 ohm load at the antenna connector, the total cable length (including switching) from the antenna port to the T must be an integer multiple of half the wavelength. For 136.975 MHz, this length is approximately 1.09 meters.

a. Set up the test bed radio system as shown in Figure 6-5. Refer to Chapter 3, Paragraph 3.2.4 for command information.

b. Refer to Paragraph 6.4.4. Repeat the Transmit Power Output and Distortion test procedure using a carrier frequency of 136.975 MHz and power output at 25.0 WATTS.

c. On PC/terminal, read the forward power of the transmission using the **fpw <enter>** command.

d. On PC/terminal, read the reverse power of the transmission using the **rpw <enter>** command.

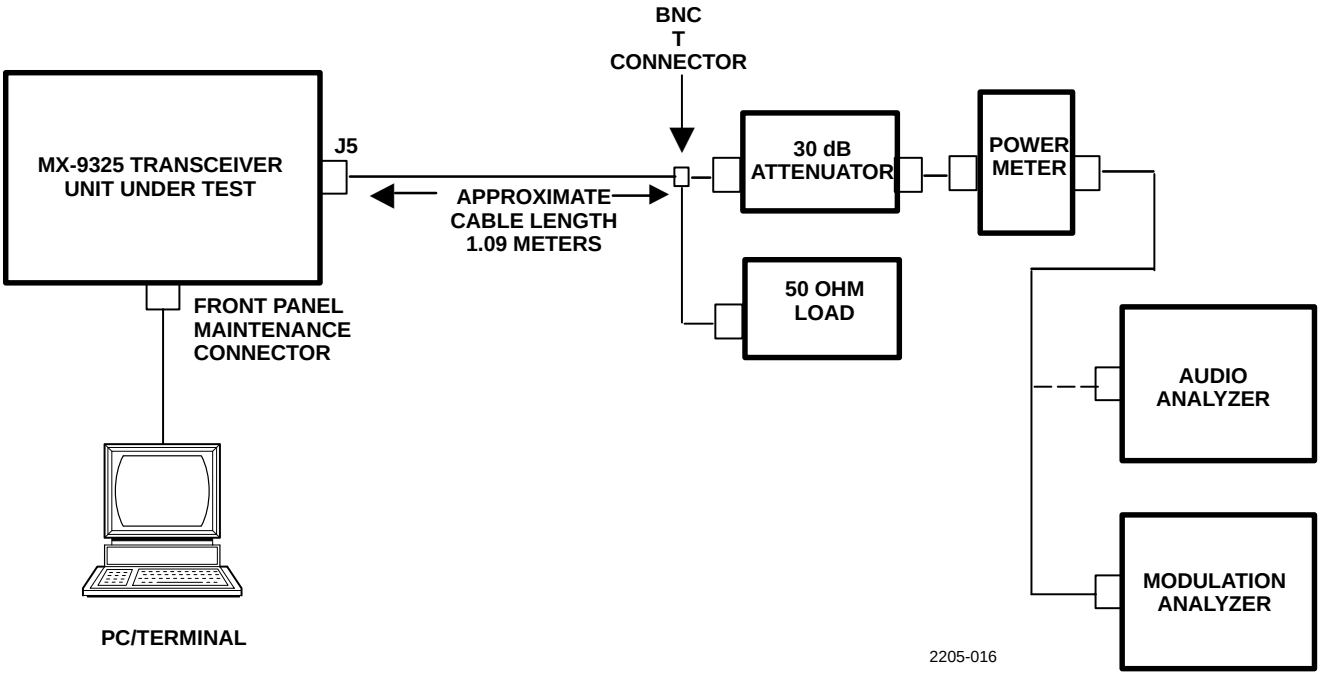

Figure 6-5. MX-9325 VSWR Load Test Set Up

6.4.6 MX-9325 Transceiver Transmit Time-Out test

Verifies the MX-9325 Transceivers continuous key timer. The time-out specified is the number of seconds the MX-9325 Transceiver may be keyed continuously before it will automatically unkey.

The following paragraphs provide instructions for performing the MX-9325 Transceiver Transmit Time-Out Test as part of scheduled maintenance.

6.4.6.1 Required Equipment

The following equipment is required to perform the MX-9325 Transceiver Transmit Time-Out Test:

- RF Power Meter
- 50 Ohm Load
- PC or ASCII Terminal

6.4.6.2 Test Procedure

Perform the following procedure to execute the MX-9325 Transceiver Transmit Time-Out Test:

a. Set up the test bed radio system as shown in Figure 6-5. Refer to Chapter 3, Paragraph 3.2.4 for command information.

b. On PC/terminal, enter **tim 3** command to set the transmitter continuous key time–out interval to 3 seconds.

c. On PC/terminal, enter **pwr 10** command to set the transmit power output level to 10 Watts.

d. On PC/terminal, enter **key on** command to key the MX-9325 Transceiver.

e. After keying for a total of 2 seconds, measure the power output on the power meter and verify the measurement is 10 Watts ±5%.

f. After keying for a total of 4 seconds, measure the power output on the power meter and verify the measurement is 0 Watts ±0.1.

g. On PC/terminal, enter **key off** command to unkey the MX-9325 Transceiver.

h. Return the time-out interval to the desired value using the **tim** command.

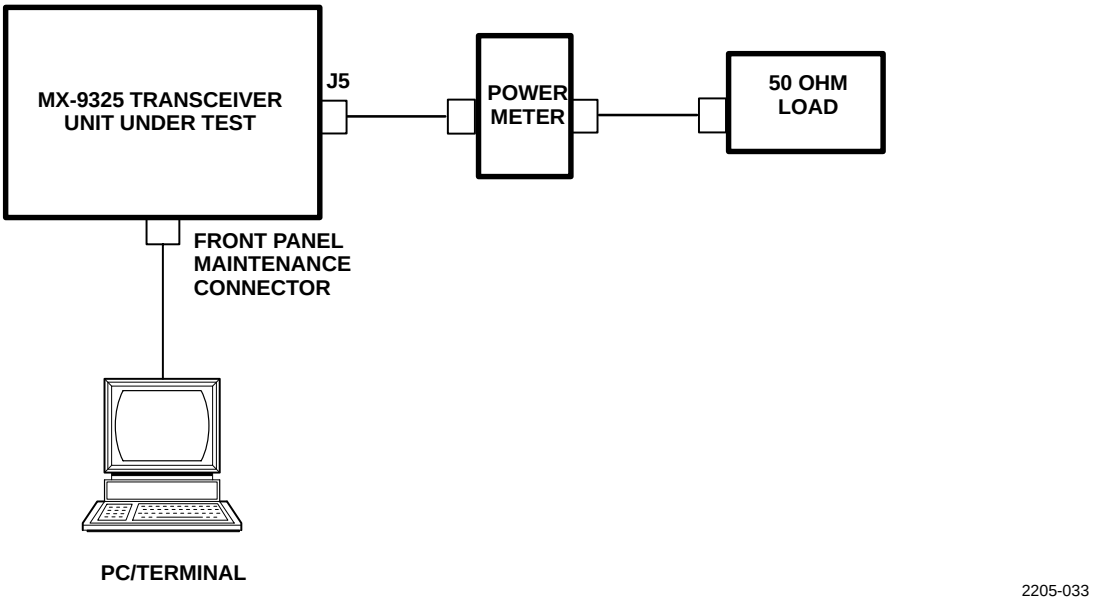

Figure 6-6. MX-9325 Transceiver Transmit Time–out

6.4.7 MX-9325 Transceiver Transmit Spurious Suppression

Performs a series of spurious suppression tests at various transmit frequencies. For each frequency, the MX-9325 Transceiver UUT will be keyed and the frequency spectrum from 118.0 to 137.0 MHz will be analyzed for spurs that may indicate improper circuit operation of the PA, exciter, power supply, etc.

The following paragraphs provide instructions for performing the MX-9325 Transceiver Transmit Spurious Suppression Test as part of scheduled maintenance.

6.4.7.1 Required Equipment

The following equipment is required to perform the MX-9325 Transceiver Transmit Spurious Suppression Test:

- 30 dB Attenuator
- Spectrum Analyzer
- PC or ASCII Terminal

6.4.7.2 Test Procedure

The MX-9325 Transceiver Transmit Spurious Suppression Tests are done at a 25 Watt power output using operating frequencies at 118.0 MHz, 126.9 MHz, 127.1 MHz and 136.975 MHz.

Perform the following procedure to execute the MX-9325 Transceiver Transmit Spurious Suppression Test:

NOTE

The suppression level, specified as a positive value, represents the amount of suppression below the carrier amplitude. For example 60 dB of suppression indicates that the amplitude of the spur relative to the carrier is –60 dBc.

a. Set up the test bed radio system as shown in Figure 6-7. Refer to Chapter 3, Paragraph 3.2.4 for command information.

b. Use PC/terminal enter **frq** command to set the frequency of the MX-9325 Transceiver to desired carrier frequency.

c. Use PC/terminal enter **pwr** command to set the output power of the MX-9325 Transceiver to 25 Watts.

d. Set the spectrum analyzer of the RF communications test set to sweep from 118.0 to 137.0 MHz.

e. Use PC/terminal enter **key on** command to key the MX-9325 Transceiver.

f. Inspect the entire spectrum analyzer waveform for any spurs which have an amplitude greater than the carrier amplitude minus the suppression of 60-dB. For example a carrier with an amplitude of 100 dB, count the spurs that occur after 40-dB.

g. Do not count the fundamental in the spur analysis. For example discard spurs that occur within 2 MHz of the carrier frequency.

h. If any spurs are within 2 MHz of each other, assume that this is a single spur with a wide bandwidth and record the frequency and level in this region at which the maximum peak occurs.

i. Record the resulting number of spurs detected.

j. Use PC/terminal enter **key off** command to unkey the MX-9325 Transceiver.

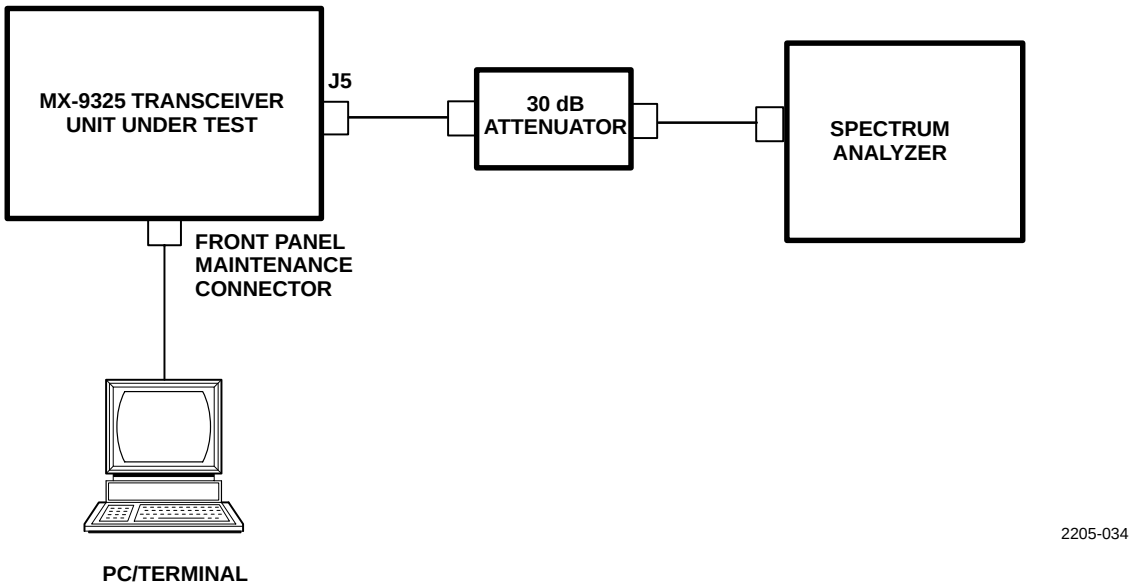

Figure 6-7. MX-9325 Transceiver Transmit Spurious Suppression Test Set up

6.5 CORRECTIVE MAINTENANCE

The following provides corrective maintenance procedures consisting of adjustments and alignments, and removal and replacement procedures.

6.5.1 MX-9325 Transceiver Removal and Replacement Procedure

Refer to Chapter 7, Paragraph 7.3 for a list of tools. See Figure 6-8 for typical MX-9325 Transceiver rack mounting. The following paragraphs provide instructions for the removal and replacement of the MX-9325 Transceiver.

WARNING

Failure to remove electrical connections from the unit could cause injury or death.

CAUTION

Failure to take the proper precautions may damage the assembly due to static discharge.

6.5.1.1 MX-9325 Transceiver Removal

Perform the following procedure to remove the MX-9325 Transceiver from the equipment rack:

a. Set the equipment rack POWER ON switch to the OFF position. Set the MX-9325 Transceiver AC POWER switch to the OFF position. Disconnect power to rack and extender unit.

b. Use a No. 2 cross-tip screwdriver (item 1) to remove four (4) screws that secure the MX-9325 Transceiver front panel to the equipment rack.

c. Use the handles to pull the unit forward until the slides are fully extended and in the locked position.

d. Disconnect the power cable from the MX-9325 Transceiver AC power input connector. Disconnect all other connections to the MX-9325 Transceiver rear panel.

e. Press the slide release button, and remove the MX-9325 Transceiver from the rack by pulling it forward until it clears the slides.

f. Place the unit on a steady work surface.

g. Push the extended rack slides back into the rack.

6.5.1.2 MX-9325 Transceiver Replacement

Perform the following procedure to replace the MX-9325 Transceiver into the equipment rack:

a. Pull the rack portion to the slides from the equipment rack until they are fully extended and locked.

b. Install the MX-9325 Transceiver to the slides and push into the equipment rack until the slides lock.

c. Connect the power cable to the MX-9325 Transceiver AC power input connector. Connect all other required electrical connections to the MX-9325 Transceiver rear panel connectors.

d. Press the release tabs on the slides and push the unit into the equipment rack.

e. Use No. 2 cross-tip screwdriver (item 1) to replace the four (4) screws that secure the MX-9325 Transceiver front panel to the equipment rack.

f. Apply AC power to equipment rack. Set the equipment rack POWER ON switch to the ON position. Set the MX-9325 Transceiver POWER ON switch to the ON position.

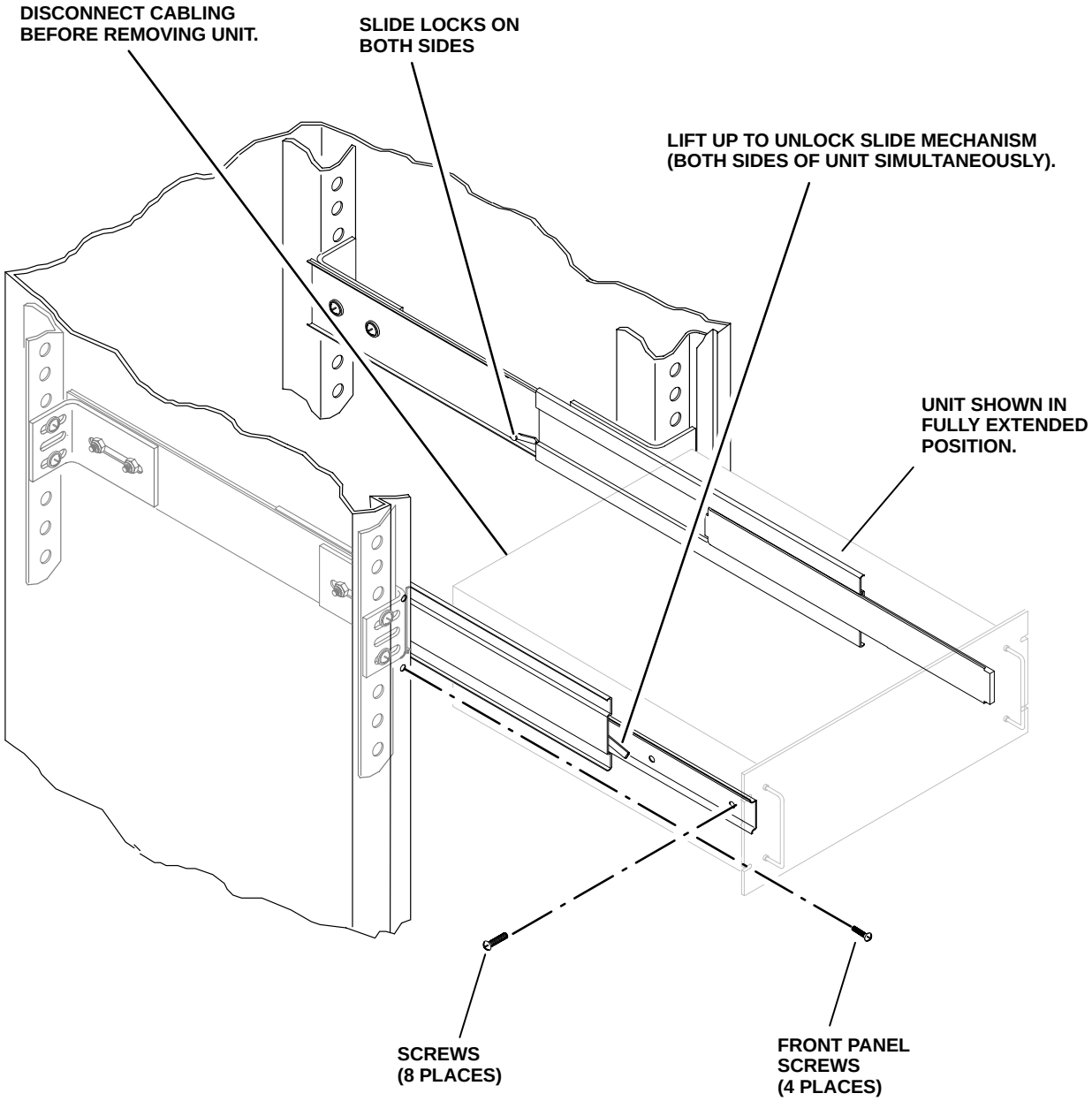

Figure 6-8. MX-9325 Transceiver Rack Mounting Details

6.5.2 A1A2 Digital PWB Assembly

Refer to Chapter 7, Paragraph 7.3 for a list of tools. See Figure 7-2 for hardware and component locations. The following paragraphs provide instructions for the removal and replacement of A1A2 Digital PWB Assembly.

WARNING

Failure to remove electrical connections from the unit could cause injury or death.

CAUTION

Failure to take the proper precautions may damage the assembly due to static discharge.

6.5.2.1 A1A2 Digital PWB Assembly Removal

Perform the following procedure to remove A1A2 Digital PWB Assembly from the MX-9325 Transceiver:

a. Set the equipment rack POWER ON switch to the OFF position. Set the MX-9325 Transceiver AC POWER switch to the OFF position. Disconnect power to rack and MX-9325 Transceiver.

b. Refer to Paragraph 6.5.1. Remove MX-9325 Transceiver from equipment rack.

c. Use flat tip screwdriver (item 6) to loosen 10 captive screws that secure the top cover MP1 to the chassis. Remove the cover.

d. Disconnect the following connectors:

- A1A2J11
- A1A2J3
- A1A2J12
- A1A2J28
- A1A2J20
- A1A2J16

e. Remove the following RF connectors

- A1A2J22
- A1A2J21
- A1A2J18

f. Use a No. 1 cross-tip screwdriver (Item2) and loosen 14 captive screws that secure the A1A2 Digital PWB Assembly.

g. Use a 3/16-inch nutdriver to remove two (2) hex screws from the front panel maintenance connector.

h. Use a 11/32-inch combination wrench (item 5) to remove nut from front panel reference connector.

i. Lift A1A2 Digital PWB Assembly and slide to the rear far enough for the maintenance and reference connectors to clear the front panel cutouts. Then continue to lift the A1A2 Digital PWB Assembly out of the chassis.

6.5.2.2 A1A2 Digital PWB Assembly Replacement

Perform the following procedure to replace A1A2 Digital PWB Assembly in the MX-9325 Transceiver:

a. Place A1A2 Digital PWB Assembly into the chassis front first so that the maintenance and reference connectors line up and position the board into the chassis.

b. Use a 3/16-inch nutdriver to replace two (2) hex screws on the front panel maintenance connector.

c. Use a 11/32-inch combination wrench (Item 5) to replace nut on front panel reference connector.

d. Use a No. 1 cross-tip screwdriver (Item2) and tighten 14 captive screws that secure the A1A2 Digital PWB Assembly.

e. Connect the following RF connectors:

- A1A2J22
- A1A2J21
- A1A2J18

f. Connect the following connectors:

- A1A2J11
- A1A2J3
- A1A2J12
- A1A2J28
- A1A2J20
- A1A2J16

g. Replace top cover MP1 onto chassis.

h. Use a flat-tip screwdriver (Item 6) to tighten 10 captive screws that secure the top cover to chassis.

i. Refer to Paragraph 6.5.1. Install MX-9325 Transceiver into equipment rack.

6.5.3 A1A3 Exciter PWB Assembly Removal and Replacement

Refer to Chapter 7, Paragraph 7.3 for a list of tools. See Figure 7-2 for hardware and component locations. The following paragraphs provide instructions for the removal and replacement of A1A3 Exciter PWB Assembly.

6.5.3.1 A1A3 Exciter PWB Assembly Removal

Perform the following procedure to remove A1A3 Exciter PWB Assembly from the MX-9325 Transceiver:

a. Set the equipment rack POWER ON switch to the OFF position. Set the MX-9325 Transceiver AC POWER switch to the OFF position. Disconnect power to rack and MX-9325 Transceiver.

b. Refer to Paragraph 6.5.1. Remove the MX-9325 Transceiver from the equipment rack.

c. Use a flat-tip screwdriver (Item 1) to loosen the ten (10) captive screws that secure bottom cover MP2 to chassis. Remove bottom cover.

d. Disconnect the following connectors:

- A1A3J3
- A1A3J4

e. Remove the following RF cables:

- A1A3J1
- A1A3J2

f. Use a No. 1 cross-tip screwdriver (Item 2) to loosen eight (8) captive screws that secure A1A3 Exciter PWB Assembly to the chassis.

g. Use a No. 2 cross-tip screwdriver (Item 1) to loosen two (2) captive screws that secure A1A3 Exciter PWB Assembly into the chassis.

h. Remove A1A3 Exciter PWB Assembly from chassis.

6.5.3.2 A1A3 Exciter PWB Assembly Replacement

Perform the following procedure to replace A1A3 Exciter PWB Assembly in the MX-9325 Transceiver:

a. Replace A1A3 Exciter PWB Assembly into the chassis.

b. Use a No. 2 cross-tip screwdriver (Item 1) to tighten two (2) captive screws that secure A1A3 Exciter PWB Assembly into the chassis.

c. Use a No. 1 cross–tip screwdriver (Item 2) to tighten eight (8) captive screws that secure A1A3 Exciter PWB Assembly to the chassis.

d. Replace the following RF connectors:

- A1A3J1
- A1A3J2

e. Replace the following connectors:

- A1A3J1
- A1A3J2

f. Place the bottom cover (MP2) onto the chassis.

g. Use a flat-tip screwdriver (Item 1) to tighten the ten (10) captive screws that secure bottom cover MP2 to chassis.

h. Refer to Paragraph 6.5.1. Install the MX-9325 Transceiver into the equipment rack.

6.5.4 A1A4 Heatsink Assembly Removal and Replacement

Refer to Chapter 7, Paragraph 7.3 for a list of tools. See Figures 7-2 and 7-4 for hardware and component locations. The following paragraphs provide instructions for the removal and replacement of A1A4 Heatsink Assembly.

WARNING

Failure to remove electrical connections from the unit could cause injury or death.

CAUTION

Failure to take the proper precautions may damage the assembly due to static discharge.

6.5.4.1 A1A4 Heatsink Assembly Removal

Perform the following procedure to remove A1A4 Heatsink Assembly from the MX-9325 Transceiver:

a. Set the equipment rack POWER ON switch to the OFF position. Set the MX-9325 Transceiver AC POWER switch to the OFF position. Disconnect power to rack and MX-9325 Transceiver.

b. Refer to Paragraph 6.5.1. Remove the MX-9325 Transceiver from the equipment rack.

c. Use a flat-tip screwdriver (Item 6) to loosen the ten (10) captive screws that secure top cover MP1 to chassis. Remove top cover.

d. Use a flat-tip screwdriver (Item 6) to loosen the tem (10) captive screws that secure the bottom cover MP2 to the chassis. Remove the bottom cover.

e. With MX-9325 Transceiver placed bottom side up disconnect the following connectors:

- A1A4A1J4
- A1A4A1J5
- A1A4A2J2

- A1A4A2J3
- A1A4A2J2
- A1A4A1J3

f. Remove the following RF connectors from:

- A1A5J2
- A1A4A1J1

g. With the MX-9325 Transceiver placed top side up remove the following connectors from:

- A1A2J11
- A1A2J3

h. Remove the following RF connector from:

- A1A4A1J2

i. Use a No. 2 cross-tip screwdriver (Item 1) to remove four (4) screws, lockwashers and flatwashers.

j. Use a No. 2 cross-tip screwdriver (Item 1) to remove one (1) ground screw, lockwasher and flatwasher.

k. Remove A1A4 Heatsink Assembly from chassis.

6.5.4.2 A1A4 Heatsink Assembly Replacement

Perform the following procedure to replace A1A4 Heatsink Assembly in the MX-9325 Transceiver:

a. Place A1A4 Heatsink Assembly onto chassis.

b. Use a No. 2 cross-tip screwdriver (Item 1) to replace four (4) screws that secure A1A4 Heatsink Assembly onto chassis.

c. Use a No. 2 cross-tip screwdriver (Item 1) to replace one (1) ground screw onto A1A4 Heatsink Assembly.

d. With MX-9325 Transceiver placed top side up, connect the following RF connector:

- A1A4A1J2

e. Connect the following connectors:

- A1A2J11
- A1A2J3

f. With the MX-9325 Transceiver placed bottom side up, connect the following RF connectors:

- A1A5J2
- A1A4A1J1

g. Connect the following connectors:

- A1A4A1J4
- A1A4A1J5
- A1A4A2J2
- A1A4A2J3
- A1A4A2J2
- A1A4A1J3

h. Replace top cover (MP1)

i. Replace bottom cover (MP2)

j. Refer to Paragraph 6.5.1. Install the MX-9325 into the equipment rack.

6.5.5 A1A5 Low Pass Filter and Directional Coupler Assembly Removal and Replacement

Refer to Chapter 7, Paragraph 7.3 for a list of tools. See Figure 7-2 for hardware and component locations. The following paragraphs provide instructions for the removal and replacement of A1A5 Low Pass Filter and Directional Coupler Assembly removal and replacement.

WARNING

Failure to remove electrical connections from the unit could cause injury or death.

CAUTION

Failure to take the proper precautions may damage the assembly due to static discharge.

6.5.5.1 A1A5 Low Pass Filter and Directional Coupler Assembly Removal

Perform the following procedure to remove A1A5 Low Pass Filter and Directional Coupler Assembly from the MX-9325 Transceiver:

a. Set the equipment rack POWER ON switch to the OFF position. Set the MX-9325 Transceiver AC POWER switch to the OFF position. Disconnect power to rack and MX-9325 Transceiver.

b. Refer to Paragraph 6.5.1. Remove the MX-9325 Transceiver from the equipment rack.

c. Refer to Paragraph 6.5.4. Remove A1A4 Heatsink Assembly.

d. Disconnect the following connectors:

- A1A5J5

- A1A5J6

e. Disconnect RF connector from A1A5J4.

f. Use a 5/16-inch combination wrench and remove the following RF connectors:

- A1A5J3
- A1A5J1

g. Use no. 1 cross-tip screwdriver (Item 2) to loosen four (4) captive screws.

h. Remove A1A5 Low Pass Filter and Directional Coupler Assembly from chassis.

6.5.5.2 A1A5 Low Pass Filter and Directional Coupler Assembly Replacement

Perform the following procedure to replace A1A5 Low Pass Filter and Directional Coupler Assembly in the MX-9325 Transceiver:

a. Place the A1A5 Low Pass Filter and Directional Coupler Assembly into the MX-9325 Transceiver Chassis.

b. Use a No. 1 cross-tip screwdriver (Item 2) to tighten four (4) captive screws.

c. Use a 5/16-inch combination wrench and replace the following RF connectors:

- A1A5J3
- A1A5J1

d. Connect RF connector to A1A5J4.

e. Connect the following connectors:

- A1A5J5
- A1A5J6

f. Refer to Paragraph 6.5.4. Replace A1A4 Heatsink Assembly.

g. Refer to Paragraph 6.5.1. Replace the MX-9325 Transceiver into the equipment rack.

6.5.6 A1A6 Low Voltage Power Supply Assembly Removal and Replacement

Refer to Chapter 7, Paragraph 7.3 for a list of tools. See Figure 7-2 for hardware and component locations. The following paragraphs provide instructions for the removal and replacement of A1A6 Low Voltage Power Supply Assembly.

WARNING

Failure to remove electrical connections from the unit could cause injury or death.

CAUTION

Failure to take the proper precautions may damage the assembly due to static discharge.

6.5.6.1 A1A6 Low Voltage Power Supply Assembly Removal

Perform the following procedure to remove A1A6 Low Voltage Power Supply Assembly from the MX-9325 Transceiver:

a. Set the equipment rack POWER ON switch to the OFF position. Set the MX-9325 Transceiver AC POWER switch to the OFF position. Disconnect power to rack and MX-9325 Transceiver.

b. Refer to Paragraph 6.5.1. Remove the MX-9325 Transceiver from the equipment rack.

c. Use a flat-tip screwdriver (Item 6) to loosen ten (10) captive screws that secure the top cover MP1. Remove the top cover.

d. Refer to Paragraph 6.5.4. Remove A1A4 Heatsink Assembly from the chassis.

e. Disconnect the following connectors:

- A1A6J5
- A1A6J9
- A1A6J8
- A1A6J7
- A1A6J4
- A1A6J1

f. Use a No.1 cross-tip screwdriver (Item 2) to loosen two (2) captive screws that secure the A1A6 Low voltage Power Supply Assembly.

g. Use a No. 2 cross-tip screwdriver (Item 1) to remove two (2) screws from behind mounting bracket.

h. Remove A1A6 Low Voltage Power Supply Assembly from chassis.

6.5.6.2 A1A6 Low Voltage Power Supply Assembly Replacement

Perform the following procedure to replace A1A6 Low Voltage Power Supply Assembly in the MX-9325 Transceiver:

a. Place A1A6 Low Voltage Power Supply Assembly in the MX-9325 Transceiver.

b. Use a No. 2 cross-tip screwdriver (Item 1) to replace two (2) screws behind mounting bracket.

c. Use a No.1 cross-tip screwdriver (Item 2) to tighten two (2) captive screws that secure the A1A6 Low Voltage Power Supply Assembly.

d. Connect the following connectors:

- A1A6J5
- A1A6J9
- A1A6J8
- A1A6J7
- A1A6J4
- A1A6J1

e. Refer to Paragraph 6.5.4. Replace A1A4 Heatsink Assembly.

f. Use a flat-tip screwdriver (Item 6) to tighten ten (10) captive screws that secure the top cover MP1.

g. Refer to Paragraph 6.5.1. Replace the MX-9325 Transceiver into the equipment rack.

6.5.7 A1A7 Receiver PWB Assembly Removal and Replacement

Refer to Chapter 7, Paragraph 7.3 for a list of tools. See Figure 7-2 for hardware and component locations. The following paragraphs provide instructions for the removal and replacement of A1A7 Receiver PWB Assembly.

WARNING

Failure to remove electrical connections from the unit could cause injury or death.

CAUTION

Failure to take the proper precautions may damage the assembly due to static discharge.

6.5.7.1 A1A7 Receiver PWB Assembly Removal

Perform the following procedure to remove A1A7 Receiver PWB Assembly from the MX-9325 Transceiver:

a. Set the equipment rack POWER ON switch to the OFF position. Set the MX-9325 Transceiver AC POWER switch to the OFF position. Disconnect power to rack and MX-9325 Transceiver.

b. Refer to 6.5.1. Remove the MX-9325 Transceiver from the equipment rack.

c. Use a flat-tip screwdriver (Item 6) to loosen the ten (10) captive screws that secure bottom cover to chassis. Remove bottom cover.

d. Disconnect the following connectors:

- A1A7J3
- A1A7J4

e. Disconnect the following RF connectors:

- A1A7J1
- A1A7J5

f. Use a No. 1 cross-tip screwdriver to loosen eight (8) captive screws that secure the A1A7 Receiver PWB Assembly.

g. Remove A1A7 Receiver PWB Assembly from chassis.

6.5.7.2 A1A7 Receiver PWB Assembly Replacement

Perform the following procedure to replace A1A7 Receiver PWB Assembly in the MX-9325 Transceiver:

a. Place A1A7 Receiver PWB Assembly into chassis.

b. Use no. 1 cross-tip screwdriver to tighten eight (8) captive screws that secure the A1A7 Receiver PWB Assembly.

c. Connect the following RF connectors:

- A1A7J1
- A1A7J5

d. Connect the following connectors.

- A1A7J3
- A1A7J4

e. Use a flat-tip screwdriver (Item 6) to loosen the ten (10) captive screws that secure bottom cover to chassis. Remove bottom cover.

f. Refer to Paragraph 6.5.1. Replace the MX-9325 Transceiver into the equipment rack.

6.5.8 A1A8 Helical Filter Assembly Removal and Replacement

Refer to Chapter 7, Paragraph 7.3 for a list of tools. See Figure 7-2 for hardware and component locations. The following paragraphs provide instructions for the removal and replacement of A1A8 Helical Filter Assembly.

WARNING

Failure to remove electrical connections from the unit could cause injury or death.

CAUTION

Failure to take the proper precautions may damage the assembly due to static discharge.

6.5.8.1 A1A8 Helical Filter Assembly Removal

Perform the following procedure to remove A1A8 Helical Filter Assembly from the MX-9325 Transceiver:

a. Set the equipment rack POWER ON switch to the OFF position. Set the MX-9325 Transceiver AC POWER switch to the OFF position. Disconnect power to rack and MX-9325 Transceiver.

b. Refer to Paragraph 6.5.1. Remove the MX-9325 Transceiver from the equipment rack.

c. Use a flat-tip screwdriver (Item 6) to loosen the ten (10) captive screws that secure bottom cover to chassis. Remove bottom cover.

d. Use 5/16-inch combination wrench to remove the two (2) RF connectors from both sides of A1A8 Helical Filter Assembly.

e. Use no. 2 cross-tip screwdriver (Item 1) to remove two (2) screws that secure A1A8 Helical Filter Assembly to chassis.

f. Remove A1A8 Helical Filter Assembly from chassis.

6.5.8.2 A1A8 Helical Filter Assembly Replacement

Perform the following procedure to replace A1A8 Helical Filter Assembly in the MX-9325 Transceiver:

a. Place A1A8 Helical Filter Assembly into chassis.

b. Use a No. 2 cross-tip screwdriver (Item 1) to replace two (2) screws that secure A1A8 Helical Filter Assembly to chassis.

c. Use a 5/16-inch combination wrench to replace the two (2) RF connectors on both side of A1A8 Helical Filter Assembly.

d. Use a flat-tip screwdriver (Item 6) to tighten the ten (10) captive screws that secure bottom cover to chassis.

e. Refer to Paragraph 6.5.1. Replace the MX-9325 Transceiver into the equipment rack.

6.5.9 Extender Unit Removal and Replacement Procedures

Refer to Chapter 7, Paragraph 7.3 for a list of tools. See Figure 6-8 for typical extender unit rack mounting. The following paragraphs provide instructions for the removal and replacement of extender unit.

WARNING

Failure to remove electrical connections from the unit could cause injury or death.

CAUTION

Failure to take the proper precautions may damage the assembly due to static discharge.

6.5.9.1 Extender Unit Removal

Perform the following procedure to remove VHF Extender Unit from the equipment rack:

a. Set the equipment rack POWER ON switch to the OFF position. Set the MX-9325 Transceiver AC POWER switch to the OFF position. Disconnect power to rack and extender unit.

b. Use a No. 2 cross-tip screwdriver (Item 1) to remove four (4) screws that secure the VHF Extender Unit front panel to the equipment rack.

c. Use the handles to pull the unit forward until the slides are fully extended and in the locked position.

d. Disconnect the power cable from the VHF Extender Unit AC power input connector. Disconnect all other connections to the VHF Extender Unit rear panel.

e. Press the slide release button, and remove the VHF Extender Unit from the rack by pulling it forward until it clears the slides.

f. Place the unit on a steady work surface.

g. Push the extended rack slides back into the rack.

6.5.9.2 Extender Unit Replacement

Perform the following procedure to replace the VHF Extender Unit into the equipment rack:

a. Pull the rack portion to the slides from the equipment rack until they are fully extended and locked.

b. Install the VHF Extender Unit to the slides and push into the equipment rack until the slides lock.

c. Connect the power cable to the VHF Extender Unit AC power input connector. Connect all other required electrical connections to the VHF Extender Unit rear panel connectors.

d. Press the release tabs on the slides and push the unit into the equipment rack.

e. Use a No. 2 cross-tip screwdriver (Item 1) to replace the four (4) screws that secure the VHF Extender Unit front panel to the equipment rack.

f. Apply AC power to equipment rack. Set the equipment rack POWER ON switch to the ON position.

6.5.10 Extender Unit Circuit Card Removal and Replacement

Refer to Chapter 7, Paragraph 7.3 for a list of tools. See Figure 7-3 for hardware and component locations. Only one procedure is needed for all types of circuit cards. The following paragraphs provide instructions for the removal and replacement of all VHF Extender Unit circuit cards.

WARNING

Failure to remove electrical connections from the unit could cause injury or death.

CAUTION

Failure to take the proper precautions may damage the assembly due to static discharge.

6.5.10.1 VHF Extender Unit Circuit Card Removal

Perform the following procedure to remove a circuit card from the VHF Extender Unit:

a. Set the equipment rack POWER ON switch to the OFF position. Disconnect power to rack and extender unit.

b. Loosen thumb screw at the top of the circuit card bracket.

c. Pull card forward to remove from VHF Extender Unit chassis rails.

6.5.10.2 VHF Extender Unit Circuit Card Replacement

Perform the following procedure to replace a circuit card in the VHF Extender Unit:

a. Align circuit card on VHF Extender Unit chassis rails and push forward until circuit card edge connector has locked with rear chassis connector.

b. Tighten thumb screw at top of circuit card bracket.

c. Refer to Paragraph 6.5.1. Replace VHF Extender Unit into equipment rack.

CHAPTER 7

SUPPORT DATA

7.1 INTRODUCTION

This chapter contains reference data for fault isolation and maintenance of the MX-9325 Transceiver. The data consists of suggested tools and test equipment, parts lists, assembly component references, troubleshooting indexes, chassis connector data, and interconnect diagrams.

7.2 ADDITIONAL SUPPORT

To ensure our customers have continued success with our products, Harris RF Communications provides logistics planning, spares, tools, technical documentation, training, product service, and field service. For any of these services contact 716-244-5830.

7.3 TOOLS, MATERIALS, AND TEST EQUIPMENT

Table 7-1 lists the tools and materials for the procedures in this book. The first column, Item, provides the item number for the tools referenced in the procedures. Table 7-2 lists the suggested test equipment for the procedures in this book. Manufacturers and models numbers listed in this table are only suggested and is not Harris' endorsement of the product. Parameter values in column two are for the measurements made in testing procedures and can be used to obtain available test equipment. The most important factor is that the test equipment used needs to be calibrated and accurate.

Table 7-1. Tools and Materials

Item	Description
1	No. 2 Cross-Tip Screwdriver
2	No. 1 Cross-Tip Screwdriver
3	3/16-Inch Nutdriver
4	5/16-Inch combination Wrench
5	11/32-Inch Combination Wrench
6	Six Inch Flat-Tip Screwdriver
7	Standard Needle–noses Pliers
8	Wire Cutters
9	Miniature Flat-Tip Screwdriver
10	Lint-Free Cloth
11	Service-Vacuum Cleaner (ESD Safe)

Table 7-2. Test Equipment

Equipment Description	Testing Parameters
RF Power Meter, with 50 W, 100–250 MHz Element	25 Watts
RF Attenuator, 30 dB, 50 Ohm, 50 Watt minimum	50 Ohm load; 30 dB attenuation of transmitter RF output signal.
Frequency Counter	117.975 to 137.000 MHz
DC Voltmeter/Digital Multimeter	+5 Vdc to +30Vdc 85 Vac to 265 Vac
Spectrum Analyzer	118.000 MHz to 137.000 MHz
Audio Analyzer	Sensitivity SINAD > 10 dB, Distortion < 5.0%
Signal Generator	AM modulation 1 kHz tone at -99 dBm, 99% modulation at 118 MHz to 137 MHz RF.
PC Terminal (ASCII) or personal computer with Terminal Emulation Software	Operational Commands using RS 232 protocol.

7.4 PARTS LISTS

The following provides parts lists of the MX-9325 Transceiver. Parts lists are separate for the assemblies, mechanical parts, attaching hardware, and ancillary kit. Figure 7-1, the family tree, shows the relationship between the various assemblies in the MX-9325 Transceiver. Figure 7-2 shows the locations of the assemblies, mechanical parts, and attaching hardware.

7.4.1 Assemblies

Table 7-3 list the assemblies in the MX-9325 Transceiver. Figure 7-2 shows the locations of the assemblies within the MX-9325 Transceiver. These items are called out in the fault isolation and maintenance procedures.

Table 7-3. MX-9325 Transceiver Assemblies

Ref. Des.	Item Name	Part Number	Figure Number
A1	MX-9325 Transceiver	12007–1000	Figure 7-2 Sheet 1 or 2
A1A2	Digital PWB Assembly	12007-2500	Figure 7-2, Sheet 1
A1A3	Exciter PWB Assembly	12007-3000	Figure 7-2, Sheet 2
A1A4	Heatsink Assembly	12007-4000	Figure 7-2, Sheet 1
A1A5	Low Pass Filter & Directional Coupler Assembly	12007-4200	Figure 7-2, Sheet 1
A1A6	Low Voltage Power Supply Assembly	12007-4600	Figure 7-2, Sheet 1
A1A7	Receiver PWB Assembly	12007-5000	Figure 7-2, Sheet 2
A1A8	Helical Filter Assembly	12007-5600	Figure 7-2, Sheet 2
A2	(Optional) Extender Unit	12007-6000	Figure 7-3
A2A1	Discrete I/O Card	12007-6100	Figure 7-3

Table 7-3. MX-9325 Transceiver Assemblies – Continued

Ref. Des.	Item Name	Part Number	Figure Number
A2A2	EIA- 530 Modem	12007-6050	Figure 7-3
A2A3	RS-232 Modem	12007-6151	Figure 7-3

7.4.2 Mechanical Parts

Table 7-4 lists the MX-9325 Transceiver mechanical parts. Figure 7-2 shows the locations of the mechanical parts. These items are called out in the fault isolation and maintenance procedures, or can be damaged or lost.

Table 7-4. MX-9325 Transceiver Mechanical Parts

Ref. Des.	Item Name	Part Number	Figure Number
MP1	Chassis Top Cover	12007-1104	Figure 7-2, Sheet 1
MP2	Chassis Bottom Cover	12007-1104	Figure 7-2, Sheet 2

7.4.3 Attaching Hardware

Table 7-4 lists the MX-9325 Transceiver attaching hardware. Figure 7-2 shows the locations of the mechanical parts. These items are called out in the fault isolation and maintenance procedures, or can be damaged or lost.

Table 7-5. MX-9325 Transceiver Attaching Hardware

Letter Code	Item Name	Part Number	Figure Number
A	Pan Head Screw, Stainless Steel, 8-32 x 1-1/4	MS51957-81	Figure 7-2, Sheet 1
B	Lockwasher	MS35338-139	Figure 7-2 Sheet 1
C	Flatwasher	MS15795-809	Figure 7-2 Sheet 1
D	Pan Head Screw, Stainless Steel, 8-32	MS51958-66	Figure 7-2, Sheet 1
E	Pan Head Screw, Stainless Steel,Philip, 6-32 x1/2	H21-0001-108	Figure 7-2, Sheet 1
F	Screw, Hex, Stainless Steel, 4-40		Figure 7-2, Sheet 1
G	Flat Head Screw, Stainless Steel, 8-32 x 5/16	MS-24693-C27	Figure 7-2 Sheet 2

7.4.4 Ancillary Kit

Table 7-4 lists the MX-9325 Transceiver ancillary kit items. These items are generally used during installation.

Table 7-6. MX-9325 Transceiver Ancillary Kit Items

Quantity.	Item Name	Part Number
1	MX-9325 Transceiver Intermediate Maintenance Manual	10515-0152-4300
1	MX-9325 Transceiver Level IV Data Package	10515-0152-4400
1	AC Power Cord	W80-0029-001

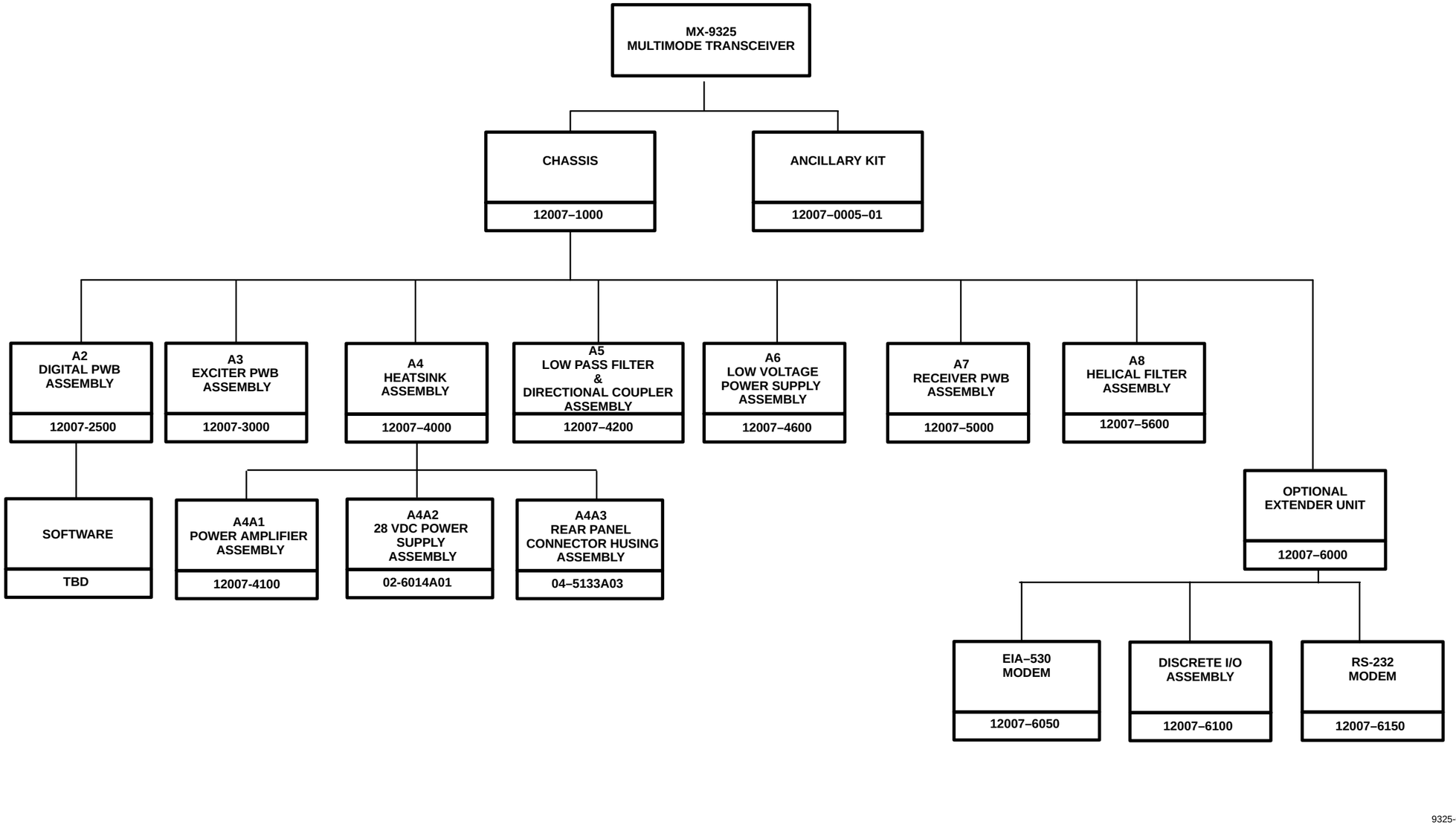

Figure 7-1. Tranceiver Family Tree

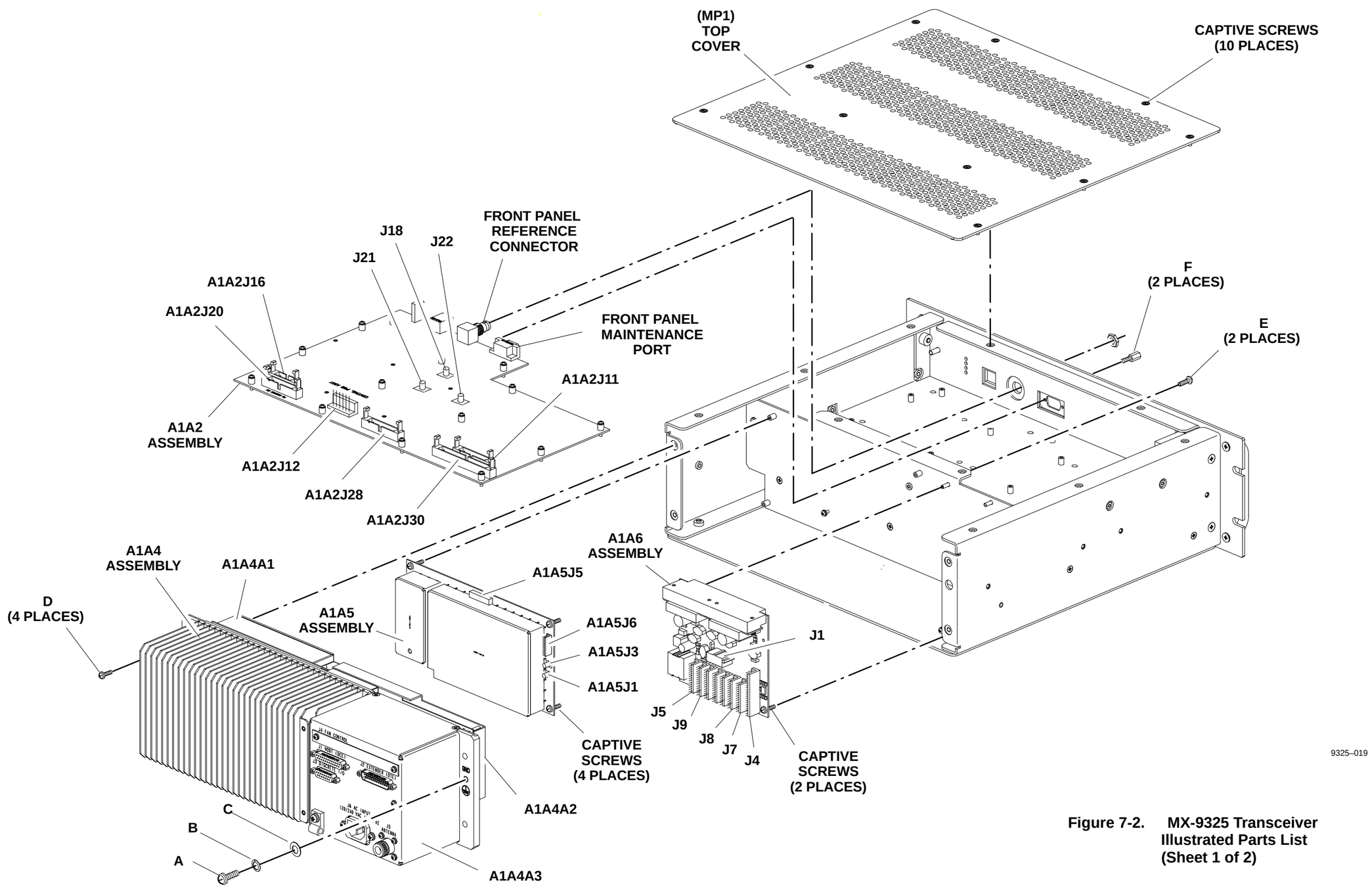

Figure 7-2. MX-9325 Transceiver Illustrated Parts List (Sheet 1 of 2)

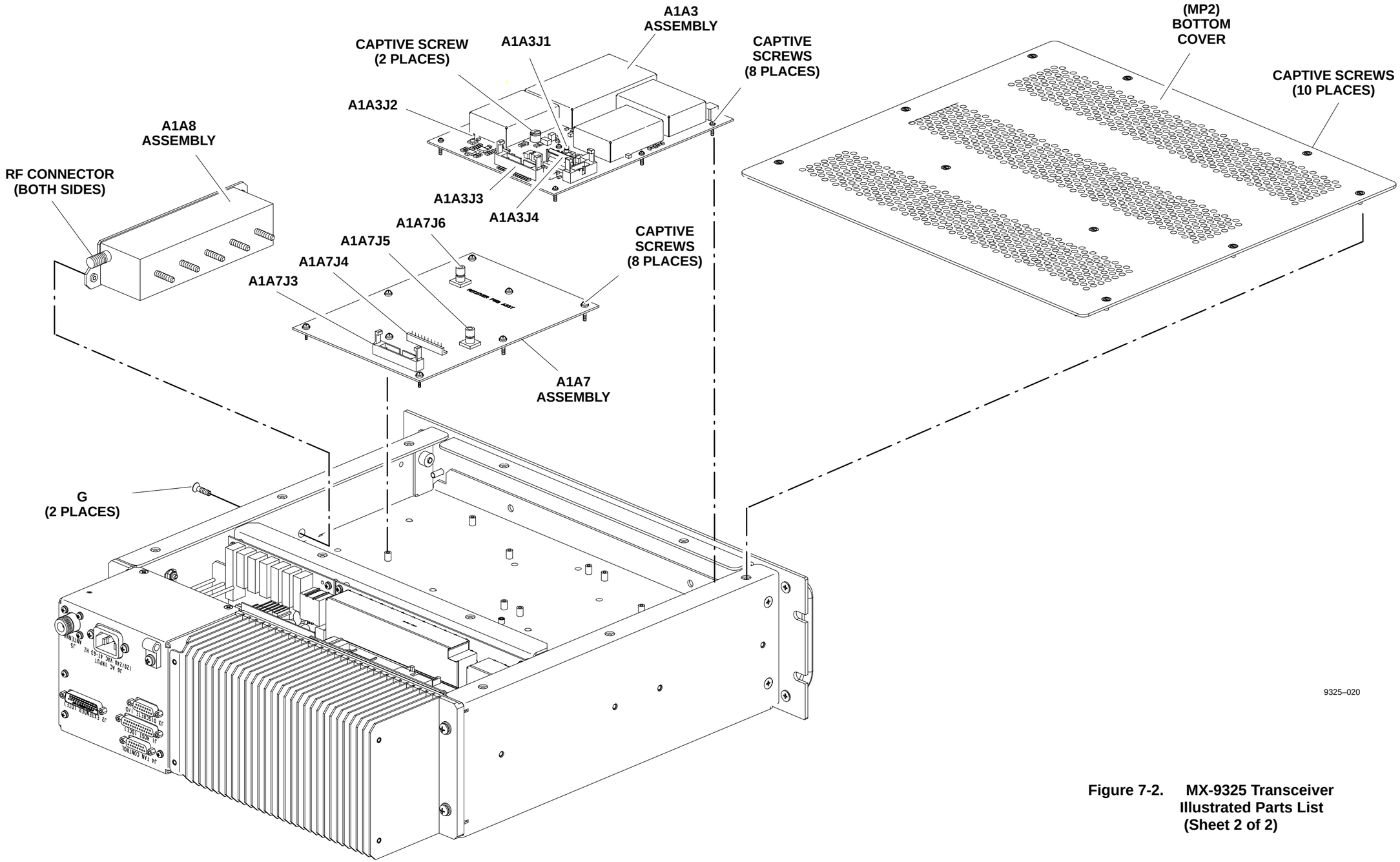

Figure 7-2. MX-9325 Transceiver Illustrated Parts List (Sheet 2 of 2)

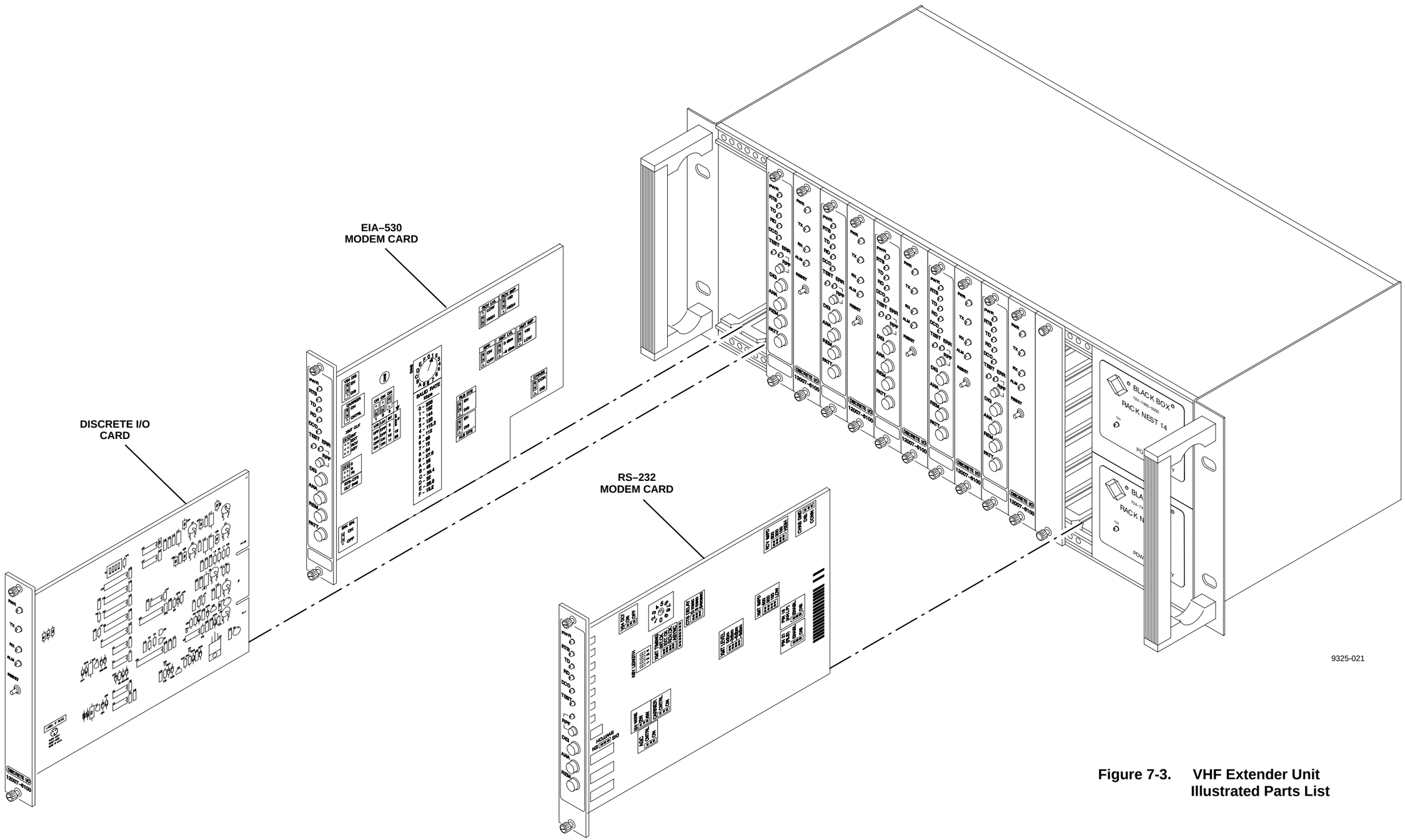

Figure 7-3. VHF Extender Unit Illustrated Parts List

7.5 ASSEMBLY COMPONENT LOCATION REFERENCES

The following provides component locations that are referenced during fault isolation and maintenance. If the connectors and pins are labeled on an assembly, and there are no other components referenced, then there is no figure for that assembly. Figure 7-4 provides reference to assembly locations of A4 HeatSink Assembly.

7.6 FAULT ISOLATION INDEXES

The following provides indexes that are helpful during fault isolation. These indexes consist of a protective device index and fault isolation index. the indexes are described in their respective paragraphs.

7.6.1 Protective Device Index

A protective device index provides information on protective devices such as circuit breakers and fuses. Table 7-7 provides the protective device index for the MX-9325 Transceiver.

Table 7-7. Protective Device Index

Reference Designation	Panel Marking or ID	Rating		Circuit Protected	Diag. Ref.
		Volts	Amps		
CB1	AC Power	230	8 Amps	AC Input	2-1, 7-2

7.6.2 Fault Isolation Index

Table 7-8 is the fault isolation index for the MX-9325 Transceiver. It is nearly impossible to identify and publish procedures for every fault that may, or may not, occur with a particular product. To help isolate faults that are not listed in Chapter 5, Paragraphs 5.2.2 and 5.2.3. The functional areas are listed in the left column of the index in Table 7-8. The second column references the functional block diagrams for each functional area. A reference for the text description for each functional area is provided in column three. Before using the index, consider the following:

a. Is the problem in the Data signal paths? Examples may be boot errors, software errors etc.

b. Is the problem in the Transmit Signal Paths? Examples may be low power output, poor over-the-air data transfers etc.

c. Is the problem in the Receive Signal Paths? Examples may be, poor received data quality etc.

d. Is the problem in the control signal paths? Examples may be loss of PA control, loss of remote control, loss of front panel control, poor over-the-air data transfers etc.

e. Is the problem in the power distribution between the various assemblies? Examples could be any of those listed for Data, Transmit, Receive or control.

Table 7-8. Fault Isolation Index

Functional Area	Signal Path Diagram	Functional Description Paragraph
Data Signal Paths	4-3	4.4.2
Transmit Signal Paths	4-4	4.4.2.1
Receive Signal Paths	4-5	4.4.2.1
Control Signal Paths	4-6	4.4.5
Power Distribution Paths	4-7	4.4.7

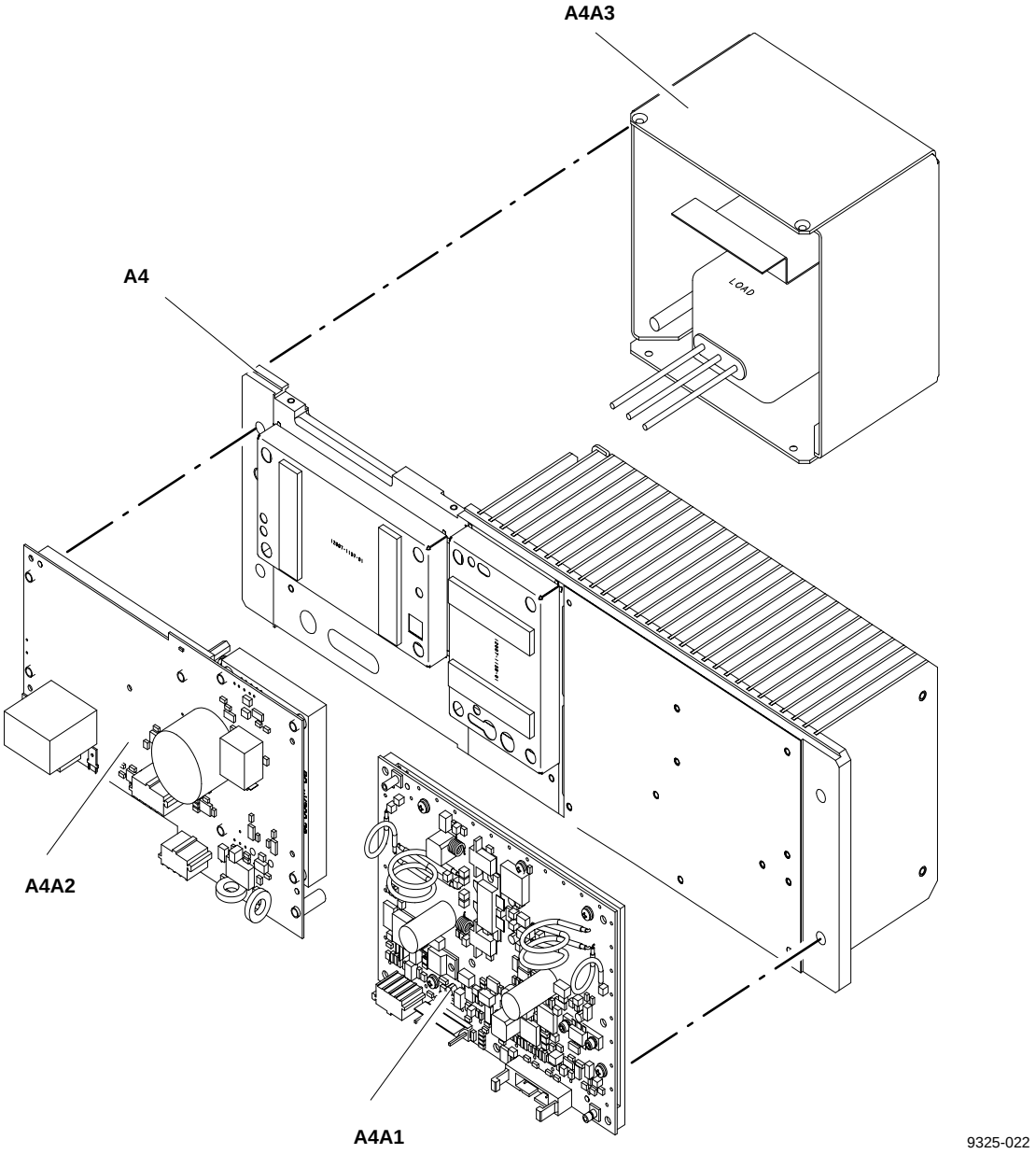

Figure 7-4. A4 Heatsink Assembly Component Location References

7.7 CHASSIS CONNECTOR DATA

The following provides chassis connector data that is helpful during installation.

7.7.1 Connectors and Mating Connectors Part Numbers

Table 7-9 provides the chassis connector part numbers and their mating connector part numbers.

Table 7-9. Connectors and Mating Connectors Part Numbers

Connector	Part Number	Mating Connector Part Number
TO BE DETERMINED		

7.7.2 MX-9325 Transceiver Chassis Connector Pinout Data

Tables 7-10 through 7-12 provide pinout data for the connectors mounted on the MX-9325 Transceiver chassis. Figure 8-2 provides the pin and connector locations.

Table 7-10. J1 Host Interface Port

Pin	Name
1	SHIELD
2	DCE_TX_DATA_A
3	DCE_RX_DATA_A
4	DCE_RTS_A
5	DCE_CTS_A
6	DCE_DSR_A
7	SIGNAL COMMON
8	DCE_DCD_A
9	DCE_RX_CLK_B
10	DCE_DCD_B
11	N/A
12	DCE_TX_CLK_B
13	DCE_CTS_B
14	DCE_TX_DATA_B
15	DCE_TX_CLK_A
16	DCE_RX_DATA_B
17	DCE_RX_CLK_A
18	N/A
19	DCE_RTS B
20	N/A
21	N/A
22	DCE_DSR B
23	N/A

Table 7-10. J1 Host Interface Port - Continued

Pin	Name
24	N/A
25	N/A

Table 7-11. J2 Extender Port

Pin	Name
1	SHIELD
2	DTE_TX_A
3	DTE_RX_A
4	DTE_RTS_A
5	DTE_CTS_A
6	DTE_DSR_A
7	SIGNAL COMMON
8	DTE_DCD_B
9	DTE_RX_CLK_B
10	DTE_DCD_B
11	N/A
12	DTE_TX_CLK_B
13	DTE_CTS_B
14	DTE_TX_DATA_B
15	DTE_TX_CLK_A
16	DTE_RX_DATA_B
17	DTE_RX_CLK_A
18	DTE_LOCAL_LOOPBACK
19	DTE_RTS_B
20	DTE_DTR_A
21	DTE_REMOTE_LOOP-BACK
22	DTE_DSR_B
23	DTE_DTR_B
24	N/A
25	N/A

Table 7-12. J3 Discrete I/O

Pin	Name
1	SHIELD/EARTH GROUND
2	TIME_REF_IN_A

Table 7-12. J3 Discrete I/O - Continued

Pin	Name
3	TIME_REF_IN_B
4	TIME_REF_OUT_A
5	TIME_REF_OUT_B
6	CHAN_BUSY_IN_A
7	CHAN_BUSY_IN_B
8	CHAN_BUSY_OUT_A
9	CHAN_BUSY_OUT_B
10	RX_MUTE_IN_A
11	RX_MUTE_IN_B
12	RX_MUTE_OUT_A
13	RX_MUTE_OUT_B
14	KEY INHIBIT
15	SIGNAL COMMON

7.7.3 VHF Extender Unit Chassis Connector Pinout Data

Tables 7-13 through 7-15 provide pinout data for the connectors mounted on the MX-9325 Transceiver chassis. Figure 8-3 provides the pin and connector locations.

Table 7-13. EIA-Modem Connections

Signal Description (Circuit Mnemonic)	Circuit Board Edge Connector	EIA-530 Data Port (Card Cage DB-25 Female)	Wire Line (Card Cage Terminal Block)
Chassis Ground (Shield)	17, 18, 39, 40	1	1
Local Analog Loopback (LL)	10	18	–
TX Data A (BA)	14	2	–
TX Data B (BA)	37	14	–
RX Data A (BB)	35	3	–
RX Data B (BB)	36	16	–
RTS A (CA)	34	4	–
RTS B (CA)	12	19	–
CTS A (CB)	33	5	–
CTS B (CB)	24	13	–
DSR A (CC)	32	6	–
DSR B (CC)	5	22	–
Signal Ground (AB)	9, 31	7	–
Remote Loopback (RL)	29	21	–
Carrier Detect A (CF)	8	8	–

Table 7-13. EIA-Modem Connections - Continued

Signal Description (Circuit Mnemonic)	Circuit Board Edge Connector	EIA-530 Data Port (Card Cage DB-25 Female)	Wire Line (Card Cage Terminal Block)
Carrier Detect B (CF)	15	10	–
Serial Clock RX A (DD)	11	17	–
Serial Clock RX B (DD)	16	9	–
Serial Clock TX–External/DTE A (DA)	7	24	–
Serial Clock TX–External/DTE B (DA)	38	11	–
Serial Clock TX–Internal/DCE A (DB)	13	15	–
Serial Clock TX–Internal/DCE B (DB)	2	12	–
DTR A (CD)	30	20	–
DTR B (CD)	27	23	–
Test Mode Indicator (TM)	6	25	–
RX Line (–)	20	–	2
RX Line (+)	42	–	3
TX Line (–)	22	–	4
TX Line (+)	44	–	5

The pinout convention for the EIA-530 modem card edge connector is as follows:

- Facing the component side of the PWB with the card edge connector to the right, pin 1 is located at the bottom and pin 22 is at the top.
- Facing the wire side of the PWB with the card edge connector to the left, pin 23 is at the bottom and pin 44 is at the top.
- Note that the keying slot is also counted as a “pin”.

Table 7-14. Discrete I/O Card Connections

Signal Description	Card Edge Connector (Discrete I/O Card)	REF CARD CAGE PINOUTS		
		Card Edge Connector (Motherboard)	Discrete I/O Interface To MX-9325 Transceiver (Card Cage DB-25 Female)	Wireline (or Loop) Interface (Card Cage Terminal Block)
RS-422 (–) TX	P2–10	32	6	
RS-422 (+) TX	P1–5	5	22	
RS-422 (–) RX	P2–12	34	17	
RS-422 (+) RX	P1–16	16	9	

Table 7-14. Discrete I/O Card Connections - Continued

Signal Description	Card Edge Connector (Discrete I/O Card)	REF CARD CAGE PINOUTS		
		Card Edge Connector (Motherboard)	Discrete I/O Interface To MX-9325 Transceiver (Card Cage DB-25 Female)	Wireline (or Loop) Interface (Card Cage Terminal Block)
+17 VDC	P1–1, P2–1	1, 23		
– 17 VDC	P1–3, P2–3	3, 25		
GND (SIGNAL)	P1–9, P2–9	9, 31	7	
GND (FRAME)	P1–17, P1–18, P2–17, P2–18	17, 18, 39, 40	1	1
LOOP (–) TX	P1–22	22		4
LOOP (+) TX	P2–22	44		5
LOOP (–) RX	P2–20	20		2
LOOP (+) RX	P2–20	42		3
ALARM (+)	P1–7	7	24	
ALARM (–)	P1–6	6	25	
ALARM RESET	P1–2	2	12	
RESERVED	P1–11	33	5	
RESERVED	P1–2	24	13	

The pinout convention for the Discrete I/O PWB card edge connector is as follows:

- Facing the component side of the PWB with the card edge connector to the right, pin P1-1 is located at the bottom and pin P1-22 is at the top.
- Facing the wire side of the PWB with the card edge connector to the left, pin P2-1 is at the bottom and pin P2-22 is at the top.
- Note that the keying slots are also counted as “pins”.

The pin convention for the Motherboard connector is the same as that of the EIA-530 modem.

Table 7-15. RS-232 Modem Connections

Signal Description	REF CARD CAGE PINOUTS		
	CIRCUIT BOARD EDGE CONNECTOR (PWB AND MOTHERBOARD)	RS–232 DATA PORT DB-25 (Female)	WIRE LINE (CARD CAGE TERMINAL BLOCK)
Chassis Ground	17, 18, 39, 40	1	1
Local Loopback (V.54, Loop 3)	10	18	–
TX Data	14	2	–
	37	14	–
RX Data	35	3	–
	36	16	–
RTS	34	4	–
	12	19	–
CTS	33	5	–
	24	13	–
DSR	32	6	–
	5	22	–
Signal Ground	9, 31	7	–
Remote Loopback (V.54 Loop 2)	29	21	–
Carrier Detect	8	8	–
–8 VDC Output	15	10	–
RX Clock Output (Sync mode)	11	17	–
+8 VDC Output	16	9	–
TX Clock Input – External (Sync Mode)	7	24	–
	38	11	–
TX Clock Output – Internal (Sync Mode)	13	15	–
	2	12	–
	30	20	–
	27	23	–
Test Mode Indicator	6	25	–
RX Line	20	–	2
RX Line	42	–	3
TX Line	22	–	4
TX Line	44	–	5

The pin convention for the RS-232 modem card edge connector is the same as that of the EIA-530 modem.

7.7.4 VHF Extender Unit Jumper/Dip Switch Setting

Tables 7-16 through 7-18 provides jumper setting available on the VHF Extender Unit Modem and Discrete I/O Cards. Figures 7-6 through 7-10 provides the jumper locations.

Table 7-16. EIA-530 Modem Jumper Settings

Jumper	Function	Possible Settings
J1 V54 DIS	Prevents activation of remote V.54 loops	Enable Disable
J2 Carrier	Selects the transmit carrier mode. When ON, transmit carrier is constantly ON. When CNTRL, transmit carrier is ON only when RTS is HIGH	ON CNTRL
J3 XMT Clock	Selects the transmit timing signal from either: internal clock, external clock or receive clock and enables working in Asynchronous mode.	INT EXT RCV ASSY
J4 RTS-CTS Delay	Selects the delay between RTS and CTS.	0 ms 9 ms 70 ms
J5	N/A	
J6 SW Enable	Enables activation of DIG, ANA and REM loopbacks via the front panel push buttons.	ON OFF
J7 RLB DTE (RL)	Enables Remote Loopback command from the DTE interface (21)	ENABLE DISABLE
J8 ALB DTE (LL)	Enables Analog Loopback command from the DTE interface (18).	ENABLE DISABLE
J9 RCV Level	Selects the receiver sensitivity level required	LOW HIGH
J10 RCV Imped-ance	Selects receive line impedance.	150W HIGH
J11 REM PWR Fail	Enables the Remote Power Failure feature. (Does not apply to EU.)	ON OFF
J12 XMT Level	Selects the transmit output level to the line.	0 dBm –6 dBm
J13 XMT Imped-ance	Selects the transmit line impedance.	150W LOW
J14 Chassis Ground	The CON setting connects Signal Ground to Chassis Ground. The DIS setting disconnects them.	CON DIS

Table 7-17. Discrete I/O Card DIP Switch Settings

Switch	Closed	Open	Default Settings
S1A (Data Polarity)	Normal	Inverted	Closed
S1B (Alarm)	NO – Relay Closes on Alarm	NC – Relay Opens on Alarm	Open
S1C	N/a	N/a	Closed
S1D			Closed

Table 7-18. RS-232 Modem Jumper/DIP Switch Settings

Jumper/ Switch	Function	Possible Settings
1 Data Rate	Selects the data rate of the modem.	0=19.2 kbps 1=14.4k 2=9.6k 3=7.2k 4=4.8k 5=3.6k 6=2.4k 7=1.2k
2 XMT Timing	For synchronous operation, determines whether the transmit timing signal comes from the internal clock, external clock or receive clock. Select ASY for asynchronous operation.	INT ASY EX RCV
3 2W/4W	Selects the line output configuration of the modem 2W or 4 W.	2W 4W
4 CTS Delay	Selects the RTS to CTS delay.	0ms 8ms 64ms
5 Carrier	Selects the transmit carrier mode. ON setting is for constant carrier, the CTRL setting is used to switch the carrier on only when RTS is high	ON OFF
6 XMT Level	Selects the transmit line level output.	0dBm –3dBm –6dBm –9dBm

Table 7-18. RS-232 Modem Jumper/DIP Switch Settings - Continued

Jumper/ Switch	Function	Possible Settings
7 XMT IMPD	Selects the transmit line impedance (ohms).	600 300 150 LOW
8 RCV IMPD	Selects the receive line impedance (ohms).	600 300 150 HIGH
9 LL Pin 18	Enables or disables the Analog Loopback (LL) from the DTE interface pin 18.	EN DIS
10 RL Pin 21	Enables or disables the Remote Loopback (RL) from the DTE interface pin 21.	EN DIS
11 FP Switch	Enables or disables control of the DIG/ANA/REM loopback via front panel pushbutton switches.	EN DIS
12 Ground	Selects or deselects connection of signal ground to chassis ground.	CONNECT DIS CONN
13 AGC	ON selects AGC always on; CTRL selects AGC on when DCD is on, when DCD goes off, AGC remains at last level.	ON CTRL
14 V.54 Delay	ON activates V.54 delay for use in tail-end circuits (prevents multiple loopback) OFF setting sets no delay (standard configuration).	ON OFF
15 ASYNC Length	S1 is not used. S2 determines the amount of stop bit shortening for Async mode. S3 & S4 determine the character lengths for asynchronous operation. A length of 10 bits is the required for 8 data bits, no parity, 1 stop bit. Refer to Table 7-19 for a complete listing of all data length settings.	– ON= 25% OFF=12.5% S3=ON, S4=OFF

Table 7-19. RS-232 Modem Data Length Settings

Start Bit	Data Bit	Parity	Stop Bits	Total Bits Length	Switch S3	Switch S4
1	5	NONE	2	8	OFF	OFF
1	5	ODD/EVEN	1 or 1.5	8	OFF	OFF
1	5	ODD/EVEN	2	9	OFF	ON
1	6	NONE	1 or 1.5	8	OFF	OFF
1	6	NONE	2	9	OFF	ON
1	6	ODD/EVEN	1 or 1.5	9	OFF	ON
1	6	ODD/EVEN	2	10	ON	OFF
1	7	NONE	1 or 1.5	9	OFF	ON
1	7	NONE	2	10	ON	OFF
1	7	ODD/EVEN	1 or 1.5	10	ON	OFF
1	7	ODD/EVEN	2	11	ON	ON
1	8	NONE	1 or 1.5	10	ON	OFF
1	8	NONE	2	11	ON	ON
1	8	ODD/EVEN	1 or 1.5	11	ON	ON

7.8 SYSTEM CABLING REQUIREMENTS

The following provides system cabling requirements and construction recommendations that is helpful during installation. Table 7-20 lists the cabling requirements for the various site configurations. The quantities listed are for each channel, which is equivalent to each transceiver or each TX/RX pair in the case of the Split Site configurations.

Table 7-20. MX-9325 System Cable Requirements - Quantity per Channel

System Configuration	Cable Letter Identification and Quantity per Channel										
	A	B #	C**	D	E	F	G**	H	J	K	M*
Standard System (Local)	1	1		1				1			1
Standard System (Local) With Antenna Switch	1	1		1	1			1			1
Remote Site Configuration	2	1		1				1	2	2	1
Remote Site Configuration With Antenna Switch	2	1		1	1	1		1	2	2	1
Split Site Configuration	3	2	1	2			1	2	2	2	2
Split Site Configuration with Local and Remote Antenna Switches	3	2	1	2	2	1	1	2	2	2	2

* Cable M is optional, not required for normal system operation.
\# Cable B is required for Mode 3 only (replacing Cable C or Cable G if applicable).
** Cables C and G are required for ACARS and Mode 2 only.

7.8.1 Cable Construction

The following paragraphs provide construction recommendations for each cable type. The length requirements are determined by site rack and equipment arrangements. The typical cable consists of a single cable with 2 connector ends, denoted P1 and P2 as shown in Figure 7-5.

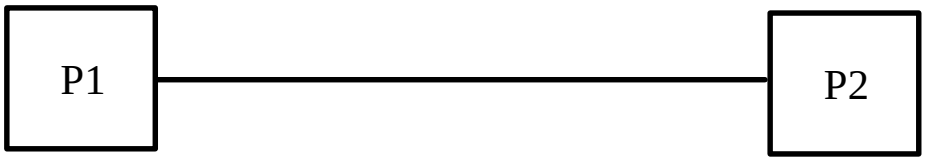

Figure 7-5. Typical System Cable

9325-035

7.8.1.1 Cable Type “A” EIA-530 DB25 Data Cable Male/Female

This cable provides twisted pair connection for EIA–530 data between the VGC, XCVR and EU. A COTS cable may be purchased such as Black Box Corporation EVN530–#–MF, where # is the length in feet (standard lengths of 5, 10, 25, 50, 75, 100, 150, and 200 feet, or custom lengths available). Alternatively, a custom cable may be constructed as described below.

The custom cable may be constructed from the material listed below:

- 1 DB25 Male Connector (Crimp & Poke): AMP HDP–20 Connector Part 747554-1, Ferrule Part 1-747579-0 (Alternate Shielded Backshell Kit – with plastic cover): AMP Kit Part 747956-1
- 1 DB25 Female Connector (Crimp & Poke): AMP HDP–20 Connector Part 747555-1, Ferrule Part 1-747579-0 (Alternate Shielded Backshell Kit – with plastic cover): AMP Kit Part 747955-1
- Cable – Foil shield, 12 ½ twisted pairs, plenum rated: Alpha cable 58812, 24 AWG, .294” Diameter or similar.

Table 7-21 lists the pinout of the EIA-530 Modem cable.

Table 7-21. Type “A” EIA-530 Cable Wiring

Signal Description	Connector Pin P1 and P2 DB25 Male & Female	Cable Pair
Chassis Ground (Shield)	1	1
Local Analog Loopback (LL)	18	1
TX Data A (BA)	2	2
TX Data B (BA)	14	2
RX Data A (BB)	3	3
RX Data B (BB)	16	3
RTS A (CA)	4	4
RTS B (CA)	19	4
CTS A (CB)	5	5
CTS B (CB)	13	5
DSR A (CC)	6	6
DSR B (CC)	22	6
Signal Ground (AB)	7	7
Remote Loopback (RL)	21	7
Carrier Detect A (CF)	8	8
Carrier Detect B (CF)	10	8
Serial Clock RX A (DD)	17	9
Serial Clock RX B (DD)	9	9
Serial Clock TX–External/DTE A (DA)	24	10
Serial Clock TX–External/DTE B (DA)	11	10
Serial Clock TX–Internal/DCE A (DB)	15	11
Serial Clock TX–Internal/DCE B (DB)	12	11
DTR A (CD)	20	12
DTR B (CD)	23	12
Test Mode Indicator (TM)	25	13 (single)

NOTE

The EIA-530 Modem uses RS-422 signalling convention for most interfaces. (Exceptions are the RL, LL, and TM interfaces which use RS-423, and the ground connections.) Each RS-422 interface involves a pair of leads labeled ”A” and ”B”. The A lead may also be referred to as (–) and the B lead may also be referred to as (+), which reflects the fact that, in the de-asserted (mark) condition, B is positive with respect to A.

7.8.1.2 Cable Type “B” – Timing Cable, Custom – Standard and Remote Configuration

This cable provides twisted pair connection for the 1 pulse per 6 second (1 PP 6S) Mode 3 timing signal source from the VGC and the Transceiver Discrete I/O connector.

The custom cable may be constructed from the material listed below:

- 1 DE9 Male Connector (Crimp & Poke): Cinch Connector Part DEMA–9P Cinch Backshell Part DMH–E–001
- DA15 Male Connector (Crimp & Poke): Cinch Connector Part DAMA–15P Cinch Backshell Part DMH–A–001
- Cable – Foil shield, 1 twisted pair, plenum rated: Alpha cable 58902, 24 AWG, .210” Diameter or similar.

Table 7-22 lists the pinout of the timing cable.

Table 7-22. Type “B” Timing Signal Cable Wiring

Circuit Name	P1 DE9 Male	P2 DA15 Male
Shield (Connect drain)		1
Time Ref In A (from VGC – PUL6–)	3	2
Time Ref In B (from VGC – PUL6+)	2	3

NOTE

The above interface uses the RS-422 signalling convention, with leads labeled ”A” and ”B”. The A lead may also be referred to as (–) and the B lead may also be referred to as (+), which reflects the fact that, in the de–asserted (mark) condition, B is positive with respect to A.

7.8.1.3 Cable Type “C” –Discrete I/O Cable, Custom – Split Site Configuration (Local)

This cable is a custom configuration, connecting the Channel Busy and Receiver Mute signals to/from the EU Discrete I/O Card to the Transceiver (configured as a TX) Discrete I/O connector.

The custom cable may be constructed from the material listed below:

- 1 DA15 Male Connector (Crimp & Poke): Cinch Connector Part DAMA-15P Cinch Backshell Part DMH-A-001
- 1 DB25 Male Connector (Crimp & Poke): Cinch Connector Part DBMA-25P Cinch Backshell Part DMH-B-001

- Cable – Foil shield, 4 twisted pairs, plenum rated: Alpha cable 58904, 24 AWG, .221” Diameter or similar.
- Shrink sleeve/Cable JacketingThe pinout of the cable is listed in the following table:

Table 7-23 lists the pinout of the Discrete I/O cable.

Table 7-23. Type ‘C’ – Timing and Discrete Signal Cable Wiring (Split TX)

Circuit Name	Signal Direction	Transceiver P1 DA15 Male	Extender Unit P2 DB25 Male	Pair
Shield (Drain Wire)		1	1	Shield
Chan Busy In A	EU → XCVR	6	4	1
Chan Busy In B	EU → XCVR	7	9	1
Rx Mute Out A	XCVR → EU	12	6	2
Rx Mute Out B	XCVR→ EU	13	22	2

NOTE

The above interfaces use the RS–422 signalling convention, with pairs of leads labeled ”A” and ”B”. The A lead in each case may also be referred to as (–) and the B lead may also be referred to as (+), which reflects the fact that, in the de–asserted (mark) condition, B is positive with respect to A.

7.8.1.4 Cable Type “D”RG-213/214 Type Coaxial Cable, COTS

The “D” cable provides the coaxial RF connection between the XCVR and the input to the Optional Antenna Switch, between the XCVR and the building Coaxial Lightning Protector and/or between the Optional Antenna Switch output and the building Coaxial Lightning Protector. The cable should be constructed of RG-213/214 Low Loss Coax Cable or similar such as Belden 9913, with Type N male connectors on each end. For reference, the RF attenuation of the RG-213/214 type cable is approximately 2.3 dB (typical) per 100 feet at 120 MHz, and approximately 1.5 dB per 100 feet at 120 MHz for Belden 9913. This does not include connector losses. Various cable manufacturers carry suitable cable, such as Pasternack (mfg) part number PE3062–#, where # denotes the length in inches, or Cable Experts 9913FCN#, where # denotes the length in feet (standard lengths of 3, 6, 50, and 100 feet, or custom lengths available).

7.8.1.5 Cable Type “E”– RS–232 DB25 Cable, COTS

Male/Female and Null Modem Adapter where applicable.

The “E“ cable provides the 25-pin RS-232 serial data connection between the VGC Antenna Control port (RS-232 DTE – DB25 male on VGC) and the optional Null Modem Adapter (and Antenna Switch) or the Extender Unit COTS RS–232 modem (RS-232 DCE – DB25 female on unit). The cable wiring is straight through, 25-Pin D Male/Female cable, L-COM part number CS2N25MF–#, where # denotes the length of the cable in feet (standard lengths of 2.5, 5, 6, 10, 12, 15, 25, and 50 feet). The Null Modem Adapter is L-COM part number DAS25R.

7.8.1.6 Cable Type “F”– RS–232 DB25 Cable, COTS – Male/Female

The “F“ cable provides the 25-pin RS-232 serial data connection between the Extender Unit COTS RS-232 Modem (RS-232 DCE – DB25 female on unit) and the control port of the Antenna Switch. The Antenna Switch interface is assumed to be that of the Delta Electronics MCU-8 or equivalent. Note that this interface includes a DB25 female connector on the unit, yet adheres to a DTE pinout (signal direction) convention. The cable wiring

is straight through, 25 Pin D Male/Male cable, L-COM part number CS2N25MM–#, where # denotes the length of the cable in feet (standard lengths of 2.5, 5, 6, 10, 12, 15, 25, and 50 feet).

7.8.1.7 Cable Type "G" – Discrete I/O Cable, Custom – Split Site Configuration (Remote)

This cable is a custom configuration, connecting the Channel Busy and Receiver Mute signals to/from the Extender Unit Discrete I/O card to the Transceiver (configured as an RX) Discrete I/O connector. The cable uses the same material as the C cable in section 5.3; however, the pinout is different.

The custom cable may be constructed from the material listed below:

- 1 DA15 Male Connector (Crimp & Poke): Cinch Connector Part DAMA-15P Cinch Backshell Part DMH-A-001
- 1 DB25 Male Connector (Crimp & Poke): Cinch Connector Part DBMA-25P Cinch Backshell Part DMH-B-001
- Cable – Foil shield, 4 twisted pairs, plenum rated: Alpha cable 58904, 24 AWG, .221" Diameter or similar.
- Shrink sleeve/Cable Jacketing

Table 7-24 lists the pinout of the Discrete I/O cable.

Table 7-24. Type G - Discrete I/O Signal Cable Wiring (Split RX)

Circuit Name	Signal Direction	P1 DA15 Male	P2 DB25 Male	Pair
Shield (Drain Wire)		1	1	Shield
Chan Busy Out A	XCVR → EU	8	6	1
Chan Busy Out B	XCVR→ EU	9	22	1
Rx Mute In A	EU → XCVR	10	4	2
Rx Mute In B	EU → XCVR	11	9	2

NOTE

The above interfaces use the RS-422 signalling convention, with pairs of leads labeled "A" and "B". The A lead in each case may also be referred to as (–) and the B lead may also be referred to as (+), which reflects the fact that, in the de-asserted (mark) condition, B is positive with respect to A.

7.8.1.8 Cable Type - H, MX-9325 and VGC Prime Power, COTS

This cable provides prime power to the MX-9325 or VGC. It is a commercial cord set suitable for 120/240 Vac. One is supplied with each MX-9325. It is Volex part number 17518 (length 2M) or similar. An IEC60320 type plug is fitted on the end which connects to the MX-9325 or VGC. The other end of the cable is left open (wires only) for installation of an appropriate customer supplied plug and subsequent connection (or hardwiring) within the customer's rack or at a nearby wall location. Wiring conforms to the international color code of BLUE for AC Line, BROWN for AC Neutral, and GREEN/YELLOW for Safety Ground.

7.8.1.9 Cable Type “J” – Extender Unit 115 Vac Prime Power, COTS

This cable provides 115 Vac prime power to the Extender Unit. One is supplied with each extender unit. Approximate length is 2M. An IEC60320 type plug is fitted on the end which connects to the extender unit. A NEMA 15 (3 prong North American) type plug is fitted on the other end which is intended for direct connection to grounded 115 Vac power outlet within the customer’s rack or at a nearby wall location. If installed outside North America and/or for 230 Vac operation, this cord is not used (see Cable K below).

7.8.1.10 Cable Type “K” – Extender Unit 230 Vac Prime Power, COTS

This cable provides 230Vac prime power to the Extender Unit. One is supplied with each Extender Unit. Approximate length is 2M. An IEC60320 type plug is fitted on the end which connects to the Extender Unit. The other end of the cable is left open (wires only) for installation of an appropriate customer supplied plug and subsequent connection (or hardwiring) within the customer’s rack or at a nearby wall location. Wiring conforms to the international color code of BLUE for AC Line, BROWN for AC Neutral, and GREEN/YELLOW for Safety Ground. If the Extender Unit is installed in North America and operated on 115VAC, this cord is not used (see Cable J above).

7.8.1.11 Cable Type “M” – RS-232 DE9 Cable Male/Female, COTS Maintenance Terminal Connection

This cable provides the RS-232 serial data connection (temporary) between the Transceiver maintenance port and the maintenance terminal. The cable wiring is straight through, 9 Pin D Male/Female cable, L–COM part number CS2N9MF–6 or equivalent (standard 6 ft length recommended; other standard lengths are 2.5, 5, 10, 12, 15, 25, and 50 feet – replace “6” with desired length).

7.8.1.12 Transmission Line - RF Coax Cable to Antennas

The ½ inch foam filled flexible transmission line is recommended for external and/or lengthy cables (e.g. 100 feet) to antennas. For reference, the RF attenuation of this type cable is approximately .23 dB (typical) per 100 feet at 120 MHz. RFS Cablewave part number 810918–001 (FLC12-50J) and N male connector part number 738802 (CONN FLC12–50NM) may be used (or Andrews equivalents). The use of a short section of flexible cable (such as RG-213/214 as used in Cable Type D) to connect the antenna to the transmission line is recommended for ease of installation and maintenance, and to limit mechanical stresses on the transmission line connector due to antenna vibrations. All connector junctions exposed to the elements should be protected (e.g. weatherproof by use of sealant and butyl tape). Installers should take care to provide adequate drip loops where necessary, especially at building ingress/egress panels.

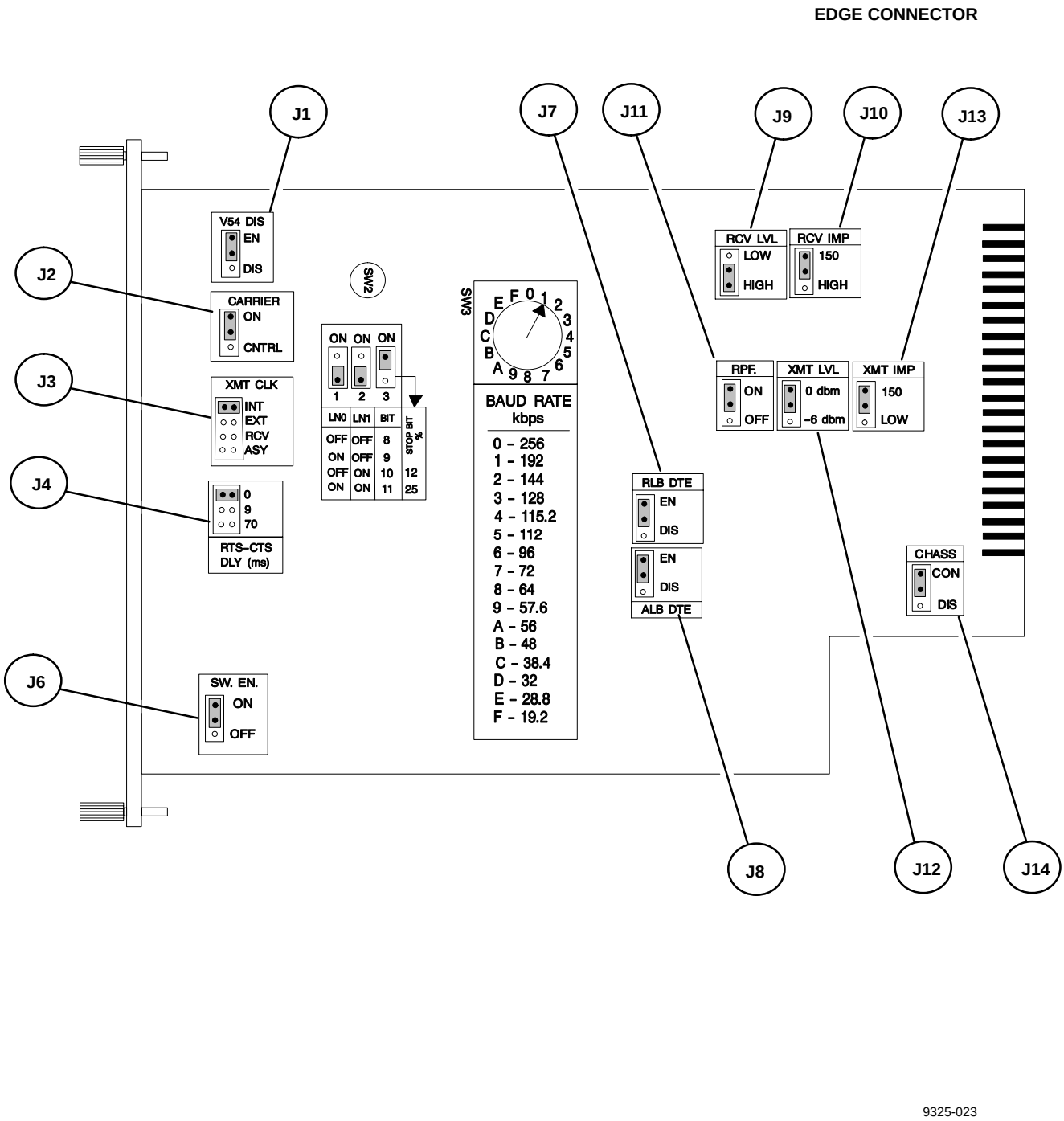

Figure 7-6. EIA-530 Modem Card

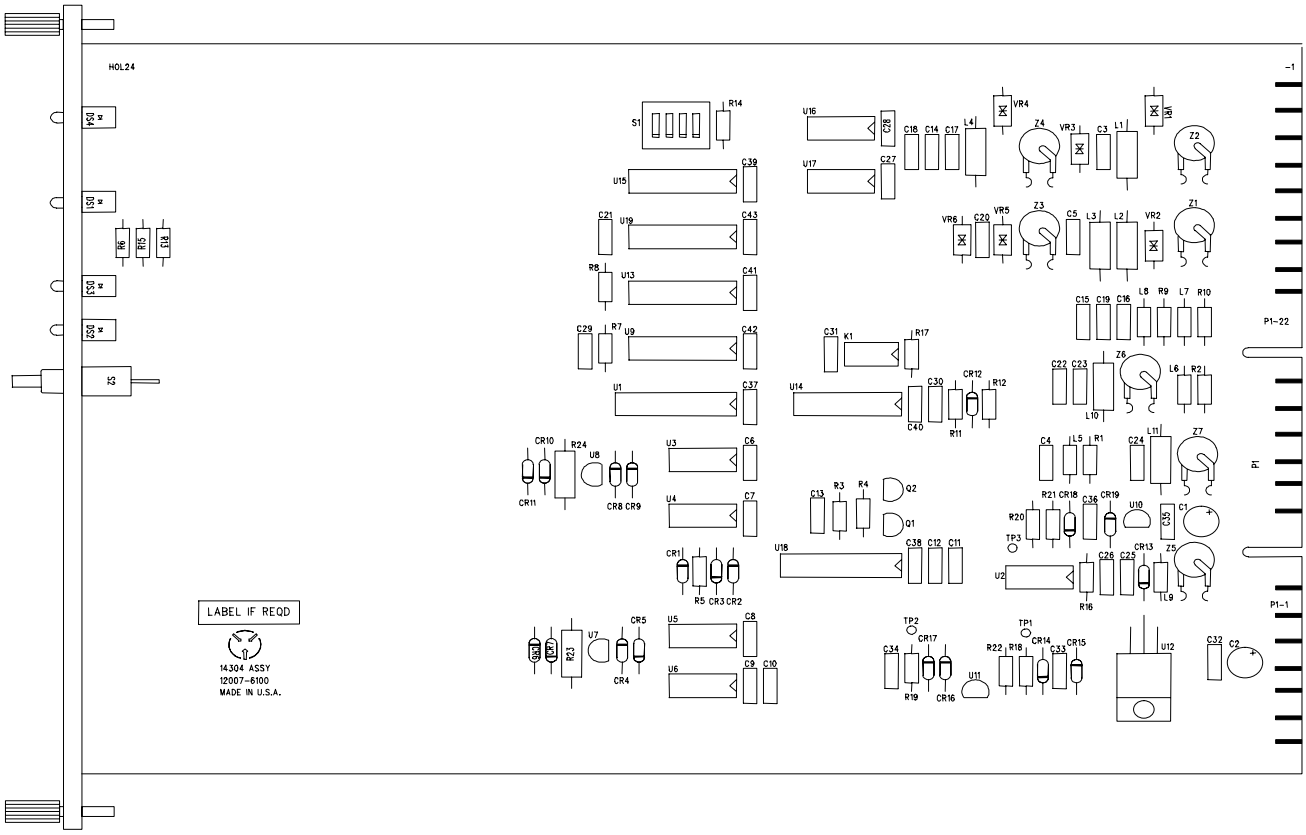

9325-024

Figure 7-9. Discrete I/O Card

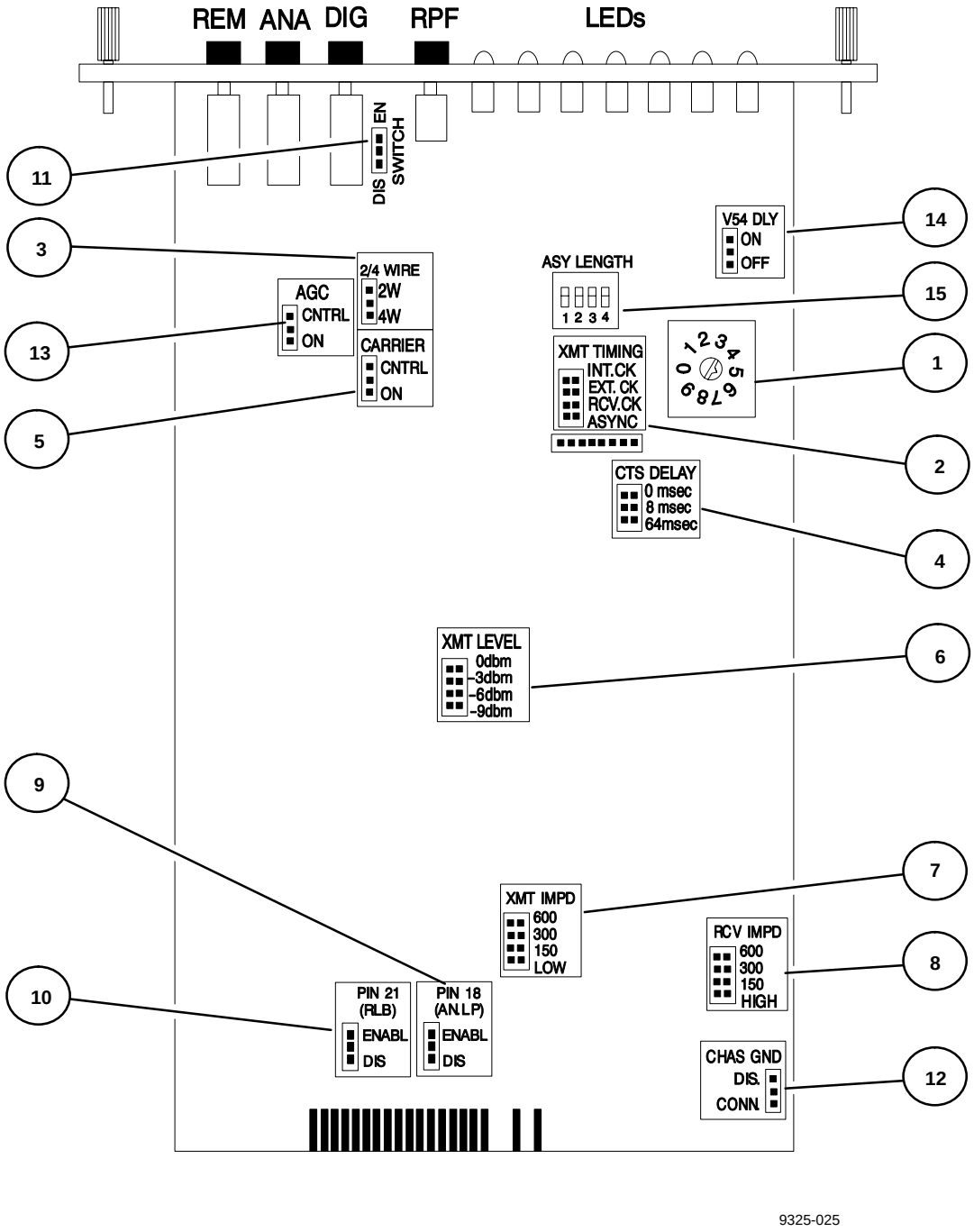

Figure 7-10. RS-232 Modem Card

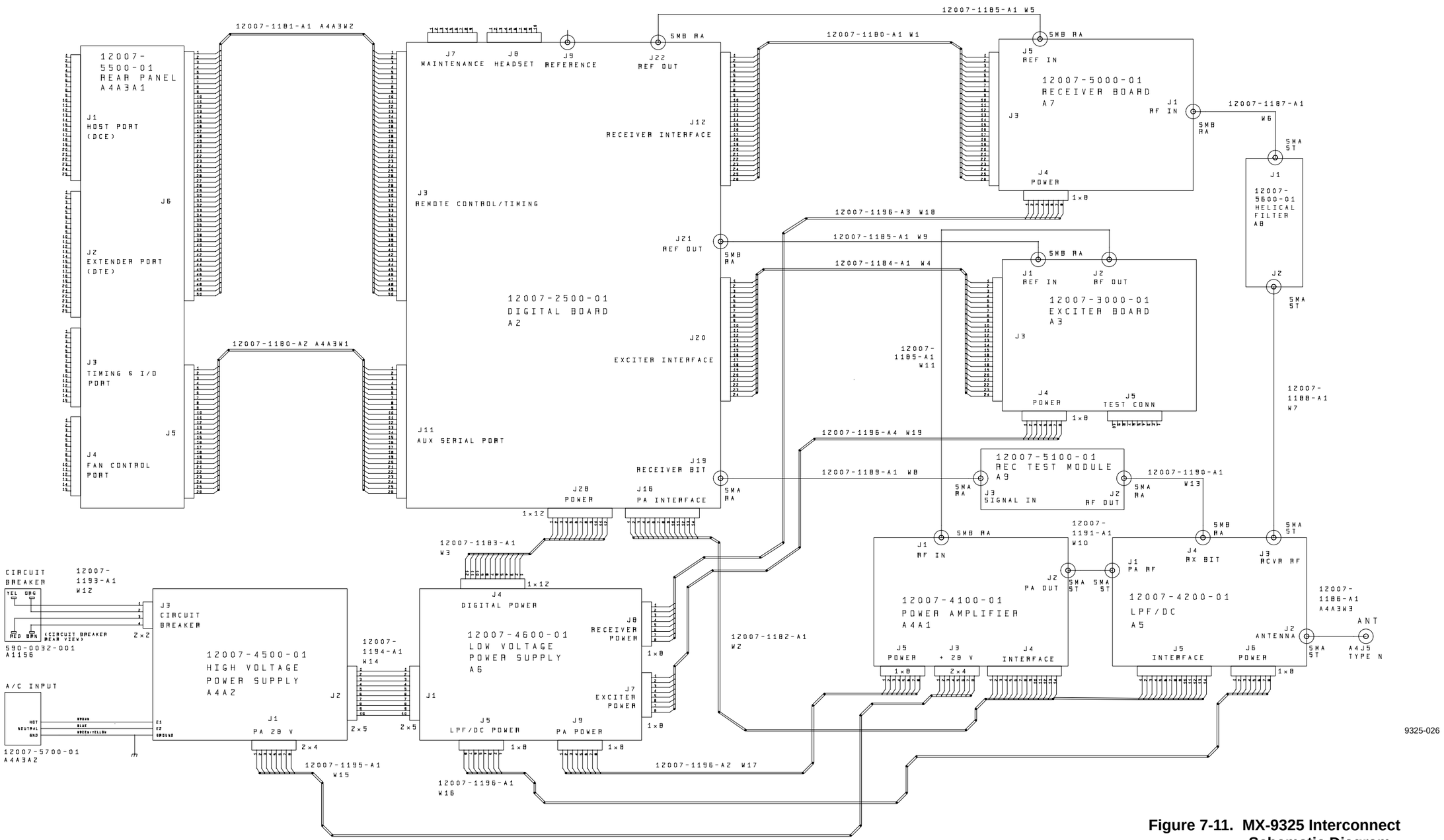

Figure 7-11. MX-9325 Interconnect Schematic Diagram

CHAPTER 8

INSTALLATION

8.1 INTRODUCTION

This chapter provides installation instructions for the MX-9325 Transceiver. Paragraph 8.2 provides recommendations and Paragraph 8.3 provides unpacking and repacking guidelines. Paragraph 8.4 provides the step-by-step installation procedures. Paragraph 8.5 provides post-installation procedures which consist of checks, setup, and operational tests, all of which should be performed after installation.

8.2 INSTALLATION RECOMMENDATIONS

The information contained here provides general guidelines for installing the System. Read this chapter in its entirety before beginning installation.

8.2.1 Selection of Physical Location

When choosing a location, become familiar with the dimensions listed in Paragraphs 8.2.2 through 8.5.3. Take into account the following:

- Location accommodates dimensions shown on Figure 8-1.
- Room for maintenance personnel to access cabling and connectors.
- Room for proper ventilation (approximately 2 in [5.8 cm] around MX-9325 Transceiver chassis).

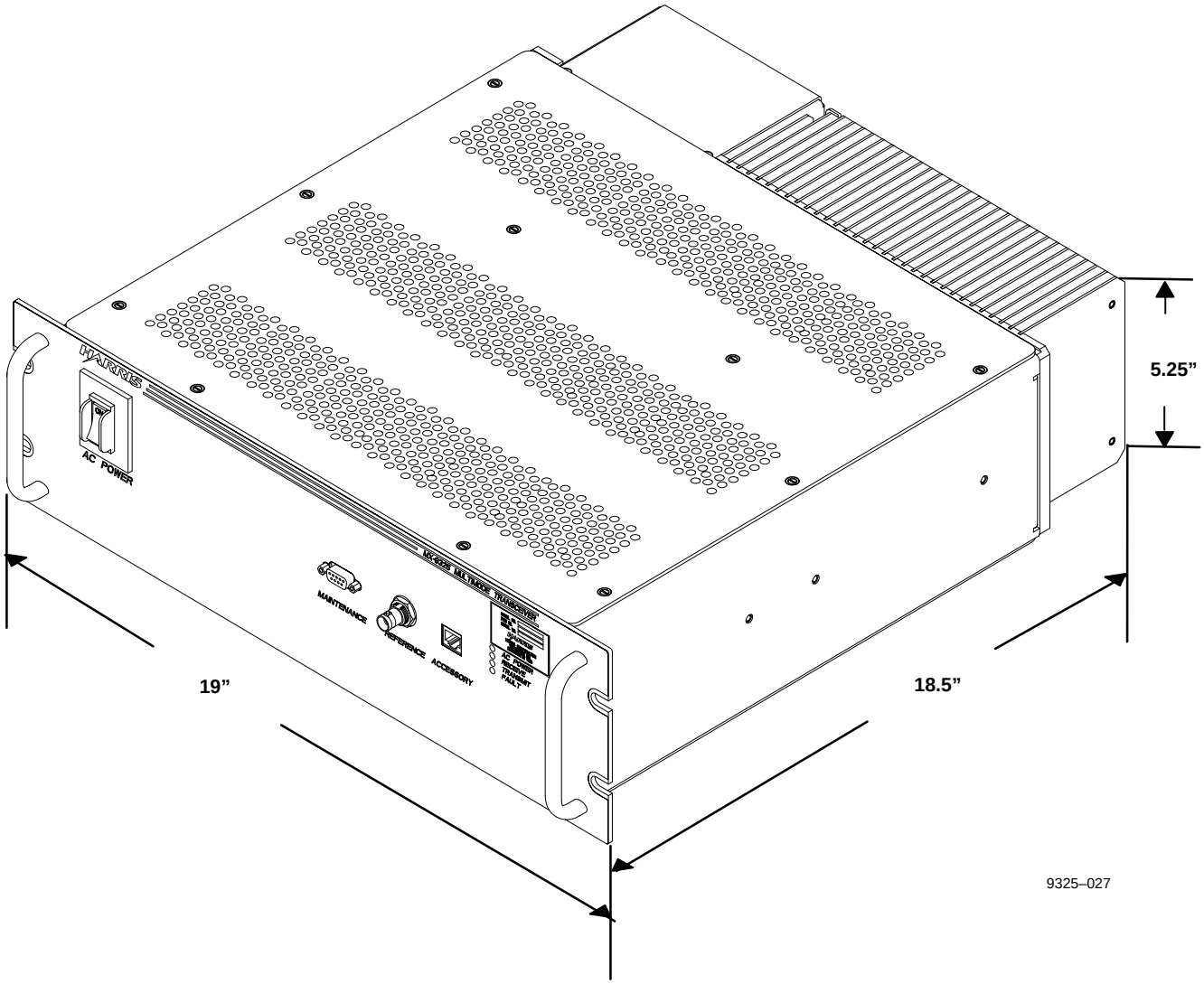

Figure 8-1. MX-9325 Transceiver Dimensions

9325-001

8.2.2 Grounding

When installing the MX-9325 Transceiver into a system rack, perform the following:

WARNING

Inadequate or defective grounding presents a personnel hazard that could result in injury or death.

CAUTION

Inadequate or defective grounding could damage the equipment.

- Connect ground braid to the ground stud provided on the rear panel.
- Use as thick a braid as possible.
- Make sure braid is short (typically less than six feet [182.9 cm]).
- Connect other end of braid to ***TBD.***
- ***TBD*** In arid climates, use ground radials.

8.2.3 Power Requirements

The MX-9325 Transceiver is designed to be powered from a 115 Vac or 230 Vac single phase source as listed in Chapter 1, Paragraph 1.7. When the MX-9325 Transceiver is supplied as part of a system designed by Harris, refer to the system documentation. If installing the MX-9325 Transceiver in a customer specific application, use the supplied AC power cable listed in Chapter 7, Paragraph 7.4.4.

8.2.4 Environmental

The MX-9325 Transceiver is designed to function in the environments listed in Chapter 1, Paragraph 1.7.

8.2.5 Access Clearance and Ventilation Requirements

When the MX-9325 Transceiver is supplied as part of a system designed by Harris, refer to the system documentation. If installing the MX-9325 Transceiver in a customer specific application, make sure there is approximately 2-Inches (5.8 cm) around chassis.

8.2.6 Antenna Considerations

To Be Determined.

8.2.7 Tools and Materials Required

A typical installation requires standard tools listed in Chapter 7, Paragraph 7.3.

8.3 UNPACKING AND REPACKING

Equipment is packed in corrugated boxes. A two-piece foam enclosure protects the equipment against abrasion and rough handling. The boxes and packing materials should be retained in case the equipment is reshipped.

The following paragraphs describe how to unpack and repack the MX-9325 Transceiver.

8.3.1 Unpacking

Perform the following procedure to unpack the equipment:

a. Inspect the exterior of the box for signs of damage during shipment. Note any problems and report them to the proper authority. An external sticker on the shipping box provides additional instructions concerning inspection of the package.

b. Use normal care to move the boxed equipment into the general location where it is to be installed. Certain boxes, depending on system configuration, may be heavy. Exercise care when moving boxed assemblies to and from locations.

c. After removing the equipment from the box, check the contents against the packing slip to see that the shipment is complete. Report discrepancies to Harris RF Communications customer service department (tel: 716-244-5830).

d. Save ancillary kit contents for installation in Paragraph 8.4. Parts list for kit can be found in Chapter 7, Paragraph 7.4.4.

8.3.2 Repacking

Perform the following procedure to repack the equipment:

a. Use the original box if it was retained. If not, use a box that allows three inches of clearance on all sides of the unit.

b. Use the original packing material if it was retained. If not, use foam packing material to fill the space between the unit and the box. Surround the entire unit with three inches of foam packing material.

c. Use a good quality packing tape (or straps) to seal the box after closing.

8.4 INSTALLATION PROCEDURES

The following paragraphs describe the procedures performed to properly install the MX-9325 Transceiver.

NOTE

Perform the procedures in the order the paragraphs are presented for installation. Reverse the order for MX-9325 Transceiver removal.

8.4.1 Jumper/DIP Switch Settings

The following paragraphs describe the jumpers and DIP switch setting of the MX-9325 Transceiver and VHF Extender Unit.

8.4.1.1 MX-9325 Transceiver

The MX-9325 Transceiver does not require setting of jumpers or dip-switches, however, when multiple MX-9325 Transceivers are installed in a system, their IDs need to be configured.

8.4.1.2 VHF Extender Unit

The VHF Extender Unit Modem Cards have jumper setting that need to be set depending on configuration. Refer to Chapter 7, Paragraph 7.7.4 for jumper settings and functions.

8.4.2 Rack Mount Installation

The MX-9325 Transceiver is designed to be rack mounted on slides or brackets.

The VHF Extender Unit is designed to be rack mounted on slides or brackets.

Refer to Chapter 6, Paragraph 6.5.1 for installation procedures.

8.4.3 Stack Mount Installation

The MX-9325 Transceiver can be stack mounted as long as proper ventilation is applied between top and bottom of equipment.

The VHF Extender Unit can be stack mounted as long as proper ventilation is applied between top and bottom of equipment.

CAUTION

Incorrect voltage selection will damage equipment.

WARNING

Contact with line voltages will cause injury or death.

8.4.4 MX-9325 Transceiver Rear Panel Connections

Figure 8-2 shows the MX-9325 Transceiver rear panel connectors. Refer to Figures 8-4, 8-5 and 8-6 for a typical system interconnect diagrams. Refer to Chapter 7, Paragraph 7.7 for connector data and pinout information. Refer to Chapter 7, Paragraph 7.8 for system cabling information.

8.4.5 VHF Extender Unit Rear Panel Connections

Figure 8-3 shows the VHF Extender Unit rear panel connectors. Refer to Figures 8-4, 8-5 and 8-6 for typical system interconnect diagrams. Refer to Chapter 7, Paragraph 7.7 for connector data and pinout information. Refer to Chapter 7, Paragraph 7.8 for system cabling information.

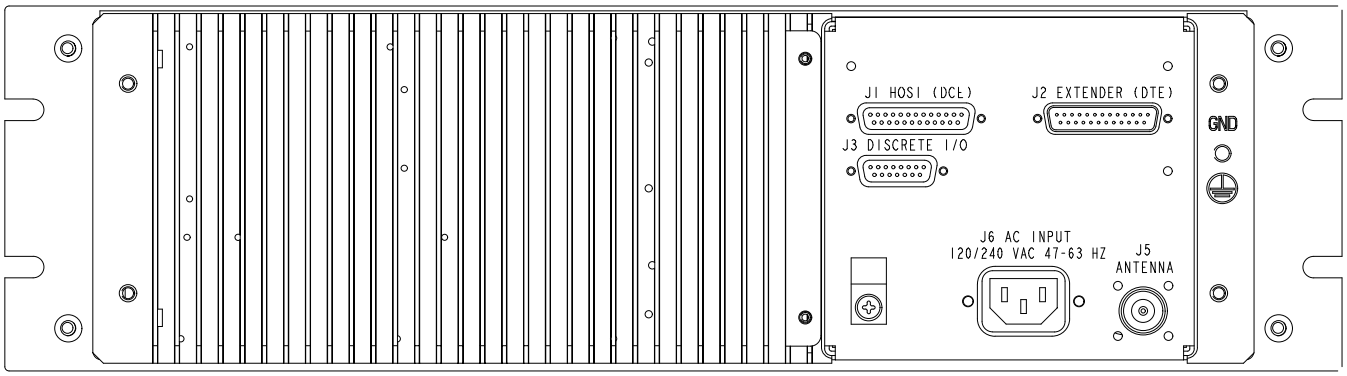

REAR VIEW

9325-028

Figure 8-2. MX-9325 Transceiver Rear Panel Connectors

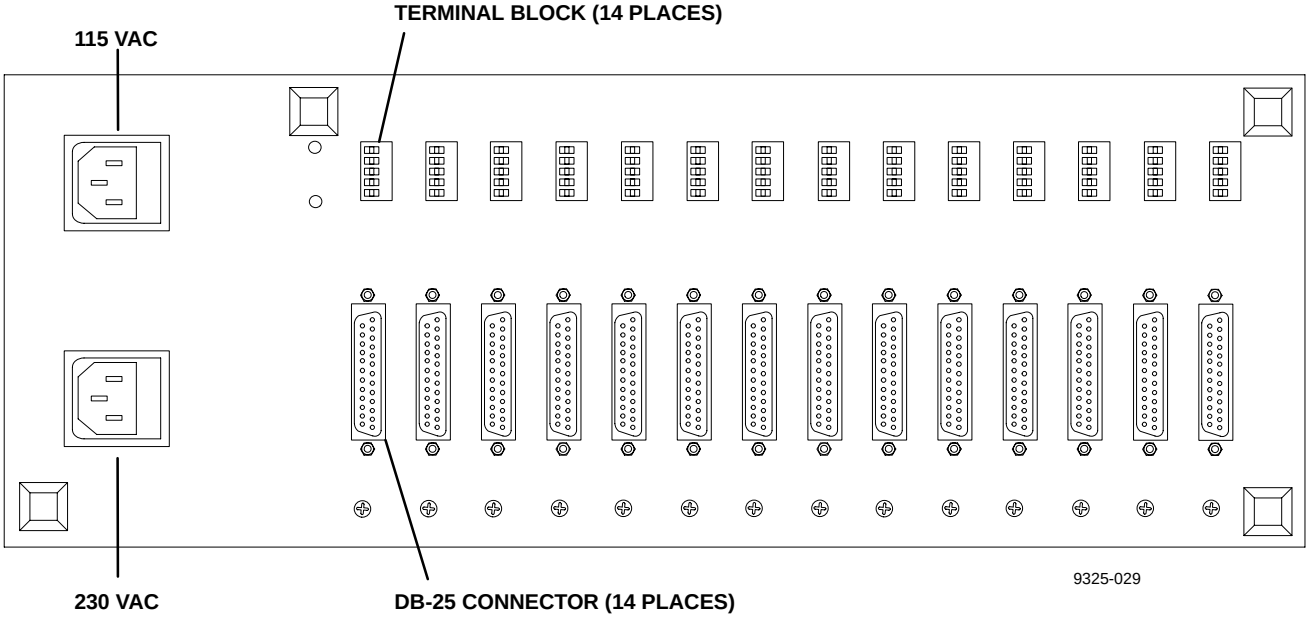

Figure 8-3. VHF Extender Unit Rear Panel

8.4.6 MX-9325 Transceiver and VHF Extender Unit System Interconnects.

Figure 8-4 illustrates a typical standard site system interconnect. Figure 8-5 illustrates a typical split site system interconnect. Figure 8-6 illustrates a typical remote site system interconnect.

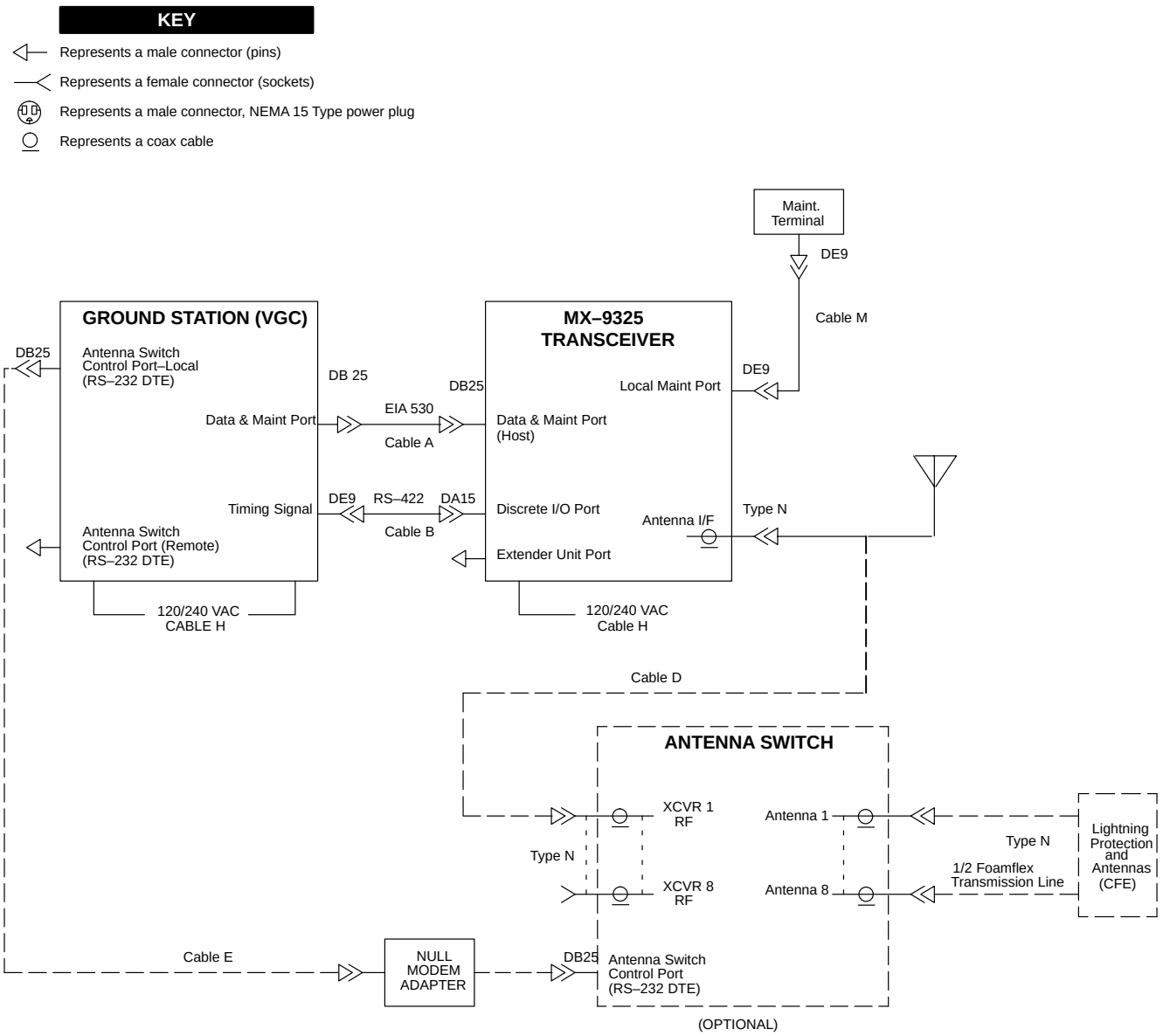

NOTES

CABLE A: EIA–530 DATA M/F
CABLE B: CUSTOM TIMING CABLE (REQUIRED FOR MODE 3 ONLY)
CABLE D: RG–213/214 LOW LOSS COAX
CABLE E: COTS RS–232 DATA – 25 PIN M/F
CABLE H: MX–9325 AND VGC PRIME POWER
CABLE M: COTS RS–232 DATA – 9 PIN M/F

9325-030

Figure 8-4. Typical Standard Site System Interconnect Diagram

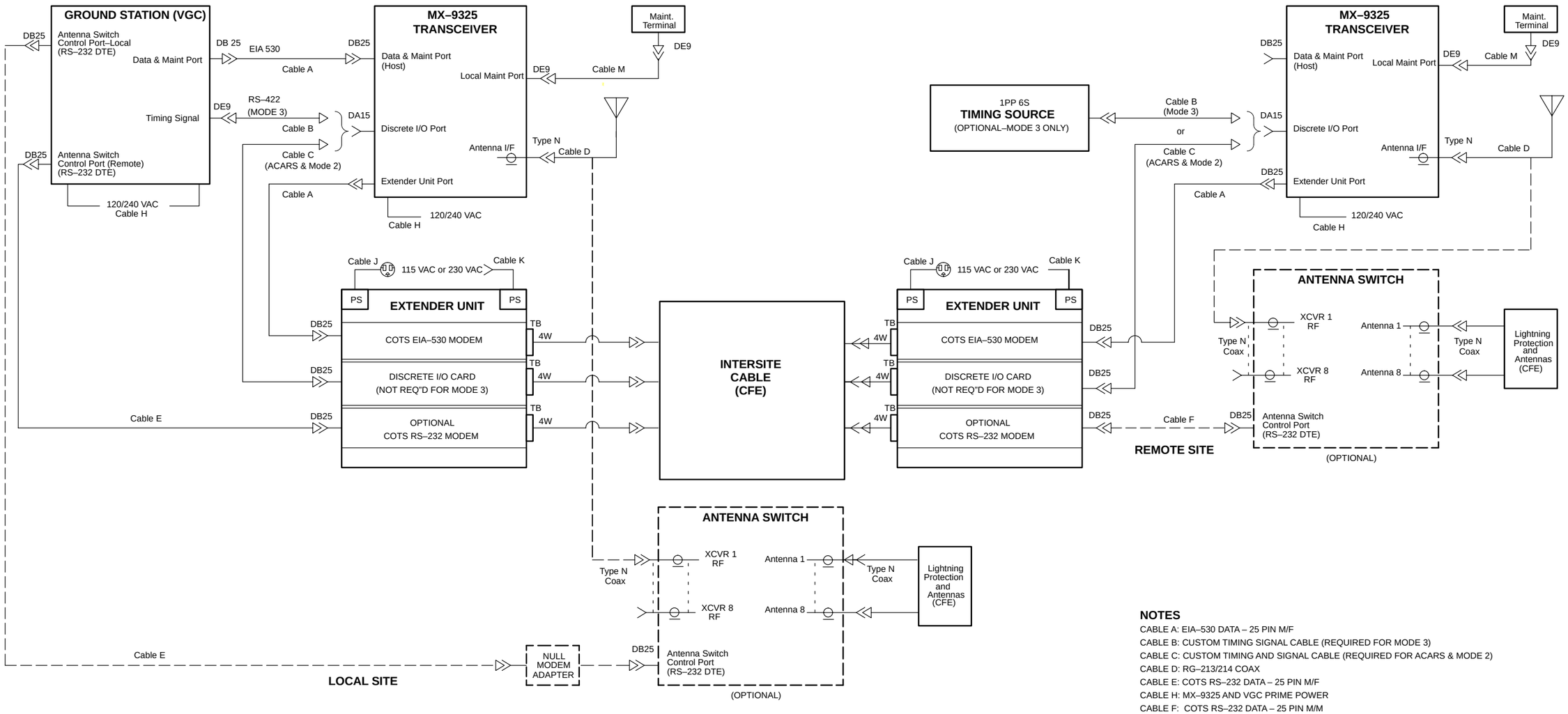

NOTES

CABLE A: EIA–530 DATA – 25 PIN M/F
CABLE B: CUSTOM TIMING SIGNAL CABLE (REQUIRED FOR MODE 3)
CABLE C: CUSTOM TIMING AND SIGNAL CABLE (REQUIRED FOR ACARS & MODE 2)
CABLE D: RG–213/214 COAX
CABLE E: COTS RS–232 DATA – 25 PIN M/F
CABLE H: MX–9325 AND VGC PRIME POWER
CABLE F: COTS RS–232 DATA – 25 PIN M/M
CABLE G: CUSTOM DISCRETE I/O SIGNAL CABLE (REQUIRED FOR ACARS & MODE 2)
CABLE J: EXTENDER UNIT PRIME POWER – 115 VAC
CABLE K: EXTENDER UNIT PRIME POWER – 230 VAC
CABLE M: RS–232 DATA – 9 PIN M/F

9325-031

KEY

- Represents a male connector (pins)
- Represents a female connector (sockets)
- Represents a male connector, NEMA 15 Type power plug
- Represents a coax cable

Figure 8-5. Typical Split Site System Interconnect Diagram

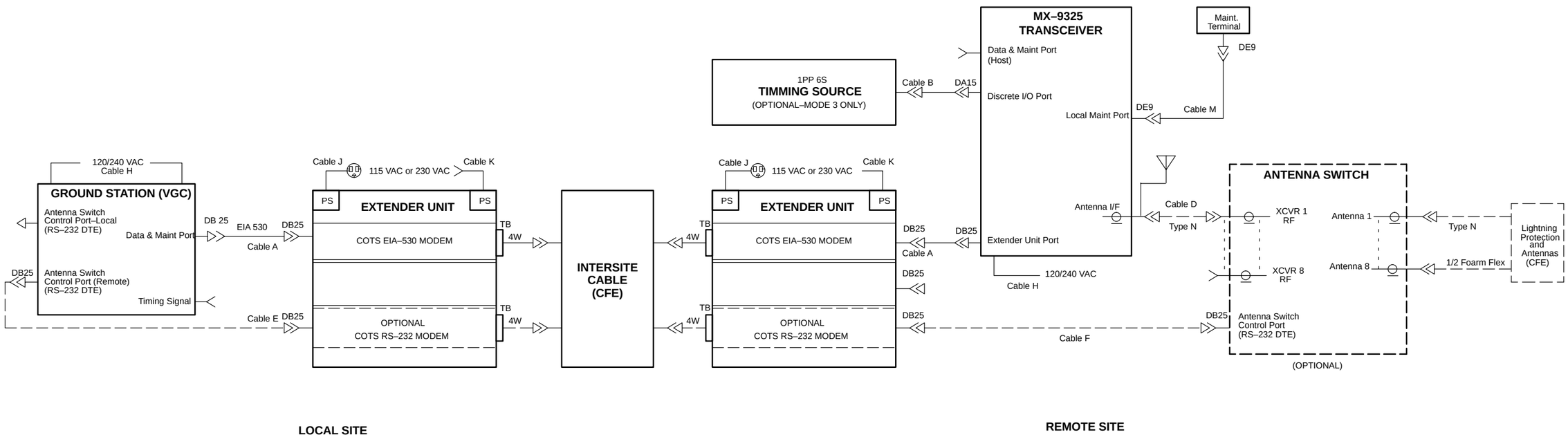

9325-032

KEY

- Represents a male connector (pins)
- Represents a female connector (sockets)
- Represents a male connector, NEMA 15 Type power plug
- Represents a coax cable

NOTES

CABLE A: EIA–530 DATA – 25 PIN M/F
CABLE B: CUSTOM TIMING CABLE (REQUIRED FOR MODE 3 ONLY)
CABLE D: RG–213/214 LOW LOSS COAX
CABLE E: COTS RS–232 DATA – 25 PIN M/F
CABLE F: COTS RS–232 DATA – 25 PIN M/M
CABLE H: MX–9325 AND VGC PRIME POWER
CABLE J: EXTENDER UNIT PRIME POWER –115 VAC
CABLE K: EXTENDER UNIT PRIME POWER –230 VAC
CABLE M: COTS RS–232 DATA – 9 PIN M/F

Figure 8-6. Typical Remote Site System Interconnect Diagram

8.5 POST-INSTALLATION PROCEDURES

8.5.1 Inspection of Installation

When the radio system is installed and all connector cables are attached, verify that the following items are completed:

- All connectors are attached and tight.
- All associated hardware is secure.
- The equipment cannot be tipped over or moved.

8.5.2 Initial Settings and Power On

Table 8-1 lists the initial settings and power on procedures.

Table 8-1. Initial Settings and Power On Procedure

Step	Observe	Reference
a. Connect a 50-Ohm RF attenuator to rear panel connector J104.		
b. Place PC or terminal POWER switch in ON position.	The PC boots or terminal powers on.	Refer to PC or terminal operation instructions.
c. If using a PC, run the desired terminal emulation program.	The PC runs the terminal emulation program.	Refer to software operation instructions for more information.
d. Ensure that the terminal emulation software or terminal is correctly configured.		Refer to Chapter 3, Paragraph 3.2.1. Also refer to terminal or emulation software operation instructions.
e. Place POWER switch on MX-9325 Transceiver front panel in the ON position.	The PC or terminal displays the power-up screen. See Figure TBD.	If the PC or terminal does not display the power-up screen, refer to the non-BIT troubleshooting procedures in Paragraph 5.2.3.
f. PC or terminal keyboard, type BIT command: **bit v <enter>**.	If a BIT fault is displayed on the PC or terminal as a result of the BIT command, write down the fault code.	Refer to the BIT troubleshooting procedures in Paragraph 5.2.2.
	If no errors occur during BIT, continue operating the radio system in an attempt to generate a run-time fault. Periodically enter the **tst <enter>** command in order to force the transmitter into running BIT.	If a run-time fault is generated, refer to the non-BIT troubleshooting procedures in Paragraph 5.2.3. If a BIT fault is generated, refer to the BIT troubleshooting procedures in Paragraph 5.2.2. If no fault is generated, return radio system to operational readiness.

8.5.3 Radio Check

After installing the MX-9325 Transceiver and it has passed the initial setting and power on procedure a radio check should be preformed. A radio check consists of programing for channels, modes, and power levels that are going to be used. Transmit and receive between two stations with identical programming/configurations. During back-to-back tests, verify the following:

- All channels used
- All modes
- All power levels

APPENDIX A

GLOSSARY

A.1 GLOSSARY

The following provides a glossary of Abbreviation and Acronyms used in this manual.

List of Abbreviations and Acronyms

Abbreviation	Term
A, AMP	Ampere(s)
ac, AC	Alternating Current
ACARS	Aircraft Communications Addressing and Reporting systems
ADC	Analog-to-Digital Converter
ADS	Automatic Dependent Surveillance
ANSI	American National Standards Institute
ANT	Antenna
AOC	Aeronautical Operational Control
ARTCC	Air route traffic control center
ASCII	American Standard Code for Information Interchange
ATC	Air Traffic Control
ATCRBS	Air traffic control radar beacon system
ATCT	air traffic control tower
AVPAC	Aviation VHF Packet communications
AUX	Auxiliary
AWG	American Wire Gauge
BERT	Bit Error Rate Tester
BPS	bits per second
BSI	British Standard Institute
BIT	Built-In Test
BITE	Built-In Test Equipment
BW	Bandwidth
C	Centigrade/Celsius
CAA	civil aviation authority
CARC	Chemical Agent Resistive Coating
CB	Circuit Breaker
CBIT	Continuous Built-In Test
CCW	Counterclockwise
CE	European Community
cm	Centimeter
CMU	Communication Management Unit

List of Abbreviations and Acronyms – Continued

Abbreviation	Term
COTS	Commercial Off-the-Shelf
CPLR	Coupler
CR	Carriage Return
CSA	Canadian Standard Association
CSMA	Carrier Sense Multiple Access
D8PSK	Differential 8 Phase Shift Keying
DAC	Digital-to-Analog Converter
DAM	Direct Access Memory
dB	Decibel(s)
dBm	Decibels referenced to 1 milliwatt
dc, DC	Direct Current
DCD	Data Carrier Detect
DCE	Data Circuit Terminating Equipment
DE	Data Encryption
Demod	Demodulated
Diff	Differential
Dip, DIP	Dual In-Line Package
DMM	Digital Multimeter
DP	Double Pole
DPDT	Double Pole, Double Throw
DPRAM	Dual-Port RAM
DPST	Double Pole, Single Throw
D/A	Digital to Analog
DSP	Digital Signal Processor
DSR	Data Set Ready
DTE	Data Terminal Equipment
DTL	Diode Transistor Logic
DTM	Data Text Message
DV	Digitized Voice
DTMF	Dual Tone Multi-Frequency
DTR	Data Terminal Ready
DUART	Dual Universal Asynchronous Receiver-Transmitter
DUSART	Dual Universal Synchronous/Asynchronous Receiver-Transmitter
DVM	Digital Voltmeter
DVOM	Digital Volt-Ohm Meter

List of Abbreviations and Acronyms – Continued

Abbreviation	Term
EAM	Embedded Adaptive Module
EAROM	Electronically Alterable Read Only Memory
ECM	Electronic Counter Measure
ECCM	Electronic Counter-Counter Measure
EEPROM, E^2PROM	Electrically Erasable Programmable Read Only Memory
EMI	Electromagnetic Interference
EIA	Electronic Industries Association
EOM	End of Message
EPROM	Erasable Programmable Read-Only Memory
EUROCAE	The European Organization for civil aviation Equipment
FAA	Federal Aviation Administration
FCC	Federal Communications Commission
FD	Full Duplex
FEC	Forward Error Correction
FET	Field-Effect Transistor
F/F	Flip-Flop
FFT	Fast Fourier Transform
FH	Frequency Hopping
FSK	Frequency Shift Keying
F/W, FW	Firmware
G-A, G/A	Ground-to-Air
GF	Government (or customer) Furnished
GFE	Government-Furnished Equipment
Gnd, GND	Ground
GNI	Ground Network Interface
GPIB	General Purpose Interface Bus
GUI	Graphical User Interface
HD	Half Duplex
HDCP	Harris Data Communications Protocol
HDLC	High-Level Data Link Control
HF	High Frequency
HSS	High-Speed Synchronizer
HSSB	High-Speed Serial Bus
HWCI	Hardware Configuration Item
Hz	Hertz

List of Abbreviations and Acronyms – Continued

Abbreviation	Term
IC	Integrated Circuit
ID	Identification
IDF	Intermediate Distribution Frame
IF	Intermediate Frequency
INT	Interrupt
INTLK	Interlock
INTR	Interrupt
I/O	Input/Output
ICAO	International Civil Aviation Authority
ISB	Independent Sideband
ISO	International Standards Organization
J	Joules
k	Kilo (thousand)
KBPS	Kilo Bits Per Second
kbyte	Kilobyte
kHz	Kilohertz
km	Kilometer(s)
kV	Kilovolt(s)
kVA	Kilovolt Ampere(s)
KVD	Keyboard Visual Display
KVDU	Keyboard Visual Display Unit
kW	Kilowatt(s)
LAN	Local Area Network
LAPB	Link Access Protocol, Balanced
LBT	Listen Before Transmit
LC	Inductive Capacitive
LCD	Liquid Crystal Display
LD	Lock Detect
LED	Light-Emitting Diode
LF	Low Frequency
LLSB	Lower Lower Sideband
LOS	Line of Sight
LP	Low Pass
LPC	Linear Predictive Coding
LQA	Link Quality Analysis

List of Abbreviations and Acronyms – Continued

Abbreviation	Term
LRU	Line Replaceable Unit
LSB	Lower Sideband
LSD	Least Significant Digit
M	Meter, Mega (one million)
m	Milli, one-one thousandth
mA	Milliampere(s)
MART	Multimode Aeronautical Radio System
Mbyte	Megabyte
MDM	MODEM
MHz	Megahertz
MIC	Microphone
MIL-STD	Military Standard
mm	Millimeter(s)
Mod	Modification, Modulated
Mod/Demod	Modulator/Demodulator
Modem	Modulator/Demodulator
MOPS	Minimum Operational Performance Standard
MOS	Metal Oxide Semiconductor
MOSFET	Metal Oxide Semiconductor Field Effect Transistor
ms, msec	Millisecond
MSK	Minimum Shift Keying
MTBCF	Mean Time Between Critical Failure
MTBF	Mean Time Between Failure
MTBM	Mean Time Between Maintenance
MTBR	Mean Time Between Replacement
MUF	Maximum Usable Frequency
Mux	Multiplex, Multiplexer
mVac	Millivolts Alternating Current
mVdc	Millivolts Direct Current
n	Nano (1×10^{-9})
NB	Narrowband
NC, N.C.	Normally Closed
N/C	Not Connected
NMOS	N-channel Metal-Oxide-Semiconductor
NO, N.O.	Normally Open

List of Abbreviations and Acronyms – Continued

Abbreviation	Term
No.	Number
NPN	N-type, P-type, N-type (transistor)
nsec	Nanoseconds
NVG	Night Vision Goggles
Ω	Ohms, a unit of resistance measurement
O&M	Operation and Maintenance
O&R	Operation and Repair
O.C.	Open Circuit or Open Collector
OEM	Original Equipment Manufacturer
Op Amp	Operational Amplifier
OCXO	Oven Controlled Crystal Oscillator
p	Pico
PA	Power Amplifier
PBIT	Periodic Built-In Test
PABX	Private Automatic Branch Exchange
PCB	Printed Circuit Board
PC	Personal Computer
PCM	Pulse Code Modulation
PEP	Peak Envelope Power
pF	Picofarad (1×10^{-12} Farads)
PIV	Peak Inverse Voltage
PLL	Phase-Locked Loop
PNP	P-type, N-type, P-type (transistor)
P-P	Peak-to-Peak
PPS	Pulse Per Second
PROM	Programmable Read Only Memory
PS	Power Supply
Pt Pt, Pt-Pt	Point-to-Point
PTT	Push-to-Talk
PWB	Printed Wiring Board
QTY	Quantity
R, RG	Receiver Circuit: Receive, Receive Ground (from teletype)
RAD	Random Access Data
RAM	Random Access Memory
RC	Resistive Capacitive

List of Abbreviations and Acronyms – Continued

Abbreviation	Term
RCU	Remote Control Unit
RCV/RX	Receive
RCVR	Receiver
RD	Read
RDY	Ready
REC	Receptacle
RETX	Retransmit
RF	Radio Frequency
RFI	Radio-Frequency Interference
RLPA	Rotatable Log Periodic Antenna
RLSD	Receive Level Sense Detect
RMS	Root Mean Squared
ROM	Read-Only Memory
RST	Reset
RTC	Real Time Clock
RTN	Return
RTS	Request to Send
RTTY	Radio Teletype
RTU	Remote Terminal Unit
S, SG	Send Circuit, Send Ground (to teletype)
SA	Spectrum Analyzer
SB	Sideband
SCR	Silicon Controlled Rectifier
SHLD	Shield
SINAD	A ratio of (signal + noise + distortion) to (noise + distortion) used to measure the signal quality of a communication channel. SINAD is commonly used to evaluate the ability of a channel to pass voice traffic.
Sip, SIP	Single In-Line Package
SMD	Surface-Mount Device
SNR	Signal-to-Noise Ratio
SOM	Start of Message
SP	Single Pole
SPDT	Single-Pole, Double-Throw
SSB	Single Sideband
ST	Single Throw

List of Abbreviations and Acronyms – Continued

Abbreviation	Term
SWR	Standing Wave Ratio
SYNC	Synchronous
TB	Terminal Board
TCXO	Temperature Controlled Crystal Oscillator
TDQPSK	Time Differential Quaternary Phase Shift Keying
TGC	Transmitter Gain Control
T/R	Transmit/Receive
TT	Teletype
TTL	Transistor-Transistor Logic
TT VFT	Teletype Voice Frequency Tone
TTY	Teletype
TX	Transmit
u	Micro (1×10^{-6})
UART	Universal Asynchronous Receiver-Transmitter
uF	Microfarad (1×10^{-6} Farads)
UHF	Ultra High Frequency
USART	Universal Synchronous/Asynchronous Receiver-Transmitter
USB	Upper Sideband
usec	Microseconds
UUSB	Upper Upper Sideband
UUT	Unit Under Test
uW	Microwave
V	Volt
VA	Volt-Ampere
Vac	Volts, Alternating Current
VCA	Voltage Controlled Attenuator
VCO	Voltage Controlled Oscillator
VCTCXO	Voltage Controlled Temperature Compensated Crystal Oscillator
VDC, Vdc	Volts, Direct Current
VDL	VHF Data Link
VDU	Video Display Unit
VECT	Vector
VF	Voice Frequency
VFO	Variable Frequency Oscillator
VFR	Voice Frequency Repeater

List of Abbreviations and Acronyms – Continued

Abbreviation	Term
VGC	VHF Ground Station Computer
VHF	Very High Frequency
VLF	Very Low Frequency
VMOS	V-groove Metal-Oxide-Semiconductor
VOM	Volt-Ohm-Meter
VOX	Voice Operated Transmitter
Vpp	Volts peak-to-peak
VSWR	Voltage Standing Wave Ratio
W	Watt(s)
WRL	Wire Run List
XCVR	Transceiver
XMT	Transmit
XMTR	Transmitter

This page intentionally left blank.

APPENDIX B

MAINTENANCE LEVELS

B.1 MAINTENANCE LEVELS

Figure B-1 describes the Harris defined and supported maintenance levels.

MAINTENANCE CONCEPT OUTLINE

	LEVEL I	LEVEL II	LEVEL III	LEVEL IV
CORRECTIVE AND PREVENTIVE MAINTENANCE	HUMM, THERE'S SOMETHING WRONG WITH MY SYSTEM PA BAD FILTER	I SEE, THE PROBLEM IS WITH THE PA. PA BAD FILTER	WELL...BIT LEADS ME TO SUSPECT A FAULTY MODULE MODULE#: A30 FAULT #: F12	THAT'S THE PROBLEM WITH THE MODULE... A BAD IC!
MAINTENANCE REPAIR KITS	NO SPECIAL ITEMS	NO SPECIAL ITEMS		
COMMON TOOLS AND TEST EQUIPMENT	NO TOOLS/TEST EQUIPMENT			TOOL CABINET
TECHNICAL MANUALS	OPERATOR CARD	SYSTEMS MANUAL	UNIT MAINTENANCE MANUAL	SOFTWARE MAINTENANCE PROGRAMS TEST FIXTURE DATA SCHEMATIC PACKAGE TECHNICAL REPAIR STANDARD
TRAINING	OPERATOR TRAINING	SYSTEMS MAINTENANCE TRAINING	UNIT MAINTENANCE MANUAL	SMT REPAIR LEVEL IV MAINT TRAINING
SPARES	NO SPARES		PRE–FAULTED MODULES	

MCO–001A

Figure B-1. Harrris Defined Maintenance Levels

TECHNICAL PUBLICATION
EVALUATION FORM

To the User of this Instruction Manual:

HARRIS Corporation, RF Communications Division continually evaluates its technical publications for completeness, technical accuracy, and organization. You can assist in this process by completing and returning this form. Please specify section, page number, figure or table number where applicable.

MANUAL TITLE: _____

MANUAL NUMBER: _____ REVISION: _____ COVER DATE: _____

GENERAL	EXCELLENT	GOOD	FAIR	POOR
TEXT	[ ]	[ ]	[ ]	[ ]
SETUP/ALIGNMENT INST.	[ ]	[ ]	[ ]	[ ]
TROUBLESHOOTING INST.	[ ]	[ ]	[ ]	[ ]
TABLES	[ ]	[ ]	[ ]	[ ]
ILLUSTRATIONS	[ ]	[ ]	[ ]	[ ]
PARTS LISTS	[ ]	[ ]	[ ]	[ ]
SCHEMATIC DIAGRAMS	[ ]	[ ]	[ ]	[ ]

CHAPTER	EXCELLENT	GOOD	FAIR	POOR
INTRODUCTION/GENERAL INFORMATION	[ ]	[ ]	[ ]	[ ]
OPERATION	[ ]	[ ]	[ ]	[ ]
FUNCTIONAL DESC/THEORY OF OPERATION	[ ]	[ ]	[ ]	[ ]
SCHEDULED MAINTENANCE	[ ]	[ ]	[ ]	[ ]
TROUBLESHOOTING	[ ]	[ ]	[ ]	[ ]
CORRECTIVE MAINTENANCE	[ ]	[ ]	[ ]	[ ]
DOCUMENTATION	[ ]	[ ]	[ ]	[ ]
INSTALLATION	[ ]	[ ]	[ ]	[ ]
ACCESSORIES	[ ]	[ ]	[ ]	[ ]

GENERAL COMMENTS: Please include your suggestions for improvements to the manual. Specify chapter, page, paragraph, figure number, or table number as applicable. Attach examples or extra pages if more space is needed.

_____

_____

_____

_____

_____

_____

_____

_____

CUT HERE

NAME: _____ DATE: _____

COMPANY: _____

ADDRESS: _____

CITY: _____ STATE: _____

ZIP: _____ COUNTRY: _____

PHONE NUMBER (INCLUDE AREA CODE): _____

CUT HERE

NOTE

U.S. POSTAL REGULATIONS NO LONGER PERMIT THE USE OF STAPLES. PLEASE SEAL THIS FORM WITH TAPE.

MAKE FIRST FOLD HERE

MAKE LAST FOLD HERE

NO POSTAGE NECESSARY IF MAILED IN THE UNITED STATES

BUSINESS REPLY MAIL

FIRST CLASS PERMIT NO. 4033 ROCHESTER, N.Y.

POSTAGE WILL BE PAID BY ADDRESSEE

HARRIS CORPORATION
RF COMMUNICATIONS DIVISION
1680 UNIVERSITY AVENUE
ROCHESTER, NEW YORK 14610-1887

ATTN: TECHNICAL SERVICES

HARRIS CORPORATION RF COMMUNICATIONS DIVISION
1680 University Avenue Rochester, New York 14610-1887 USA
Tel: 716-244-5830. Fax: 716-242-4755. http://www.harris.com