Applicant: TOP VICTORY ELECTRONICS (TAIWAN) CO., LTD.	
FCC ID: ARS-PWMAW630A	IC: 9190A-PWMAW630A
RF Exposure Requirements (FCC KDB 680106 D01)	
Requirements	Statements
(a) Power transfer frequency is less that 1 MHz	125KHz~205KHz Please refer to product specification (1. General Description)
(b) Output power from each primary coil is less than 5 watts	Less than 5W FCC RF Exposure Requirements_LGIT.p
(c) The transfer system includes only single primary and secondary coils. This includes charging systems that may have multiple primary coils and clients that are able to detect and allow coupling only between individual pairs of coils	This device single coil, please refer to product specification (1. General Description) photo
(d) Client device is inserted in or placed directly in contact with the transmitter	Charging only when the client device is placed directly in contact with transmitter.

(e) The maximum coupling surface area of the transmit (charging) device is between 60 cm^2 and 400 cm^2.	The coil round area is 3.1416x2.5x2.5=19.635 cm^2.
(f) Aggregate leakage fields at 10 cm surrounding the device from all simultaneous transmitting coils are demonstrated to be less than 30% of the MPE limit.	The highest leakage filed is less than 30 % of the MPE limit. Please refer to BV RF Exposure Report

Rex. Lai

Rex Lai
Assistant Manager
Bureau Veritas Consumer Products Services (H.K.) Ltd., Hsinchu Branch

Confidential

1 General

1.1 Introduction

The Wireless Power Consortium (WPC) is a worldwide organization that aims to develop and promote global standards for wireless power transfer in various application areas. A first application area, designated Power Class 0, is wireless charging of low and medium power devices, such as mobile phones and tablet computers. The Wireless Power Consortium maintains the Qi logo for this application area.

1.2 Scope

This document, *Parts 1 and 2: Interface Definitions,* defines the interface between a Power Transmitter and a Power Receiver, i.e. Power Class 0 Base Stations and Mobile Devices. Power Class 0 is the WPC designation for flat-surface devices, such as chargers, mobile phones, tablets, cameras, and battery packs, in the Baseline Power Profile (≤ 5 W) and Extended Power Profile (≤ 15 W).

Copyright©. 2016. All Rights Reserved.

Confidential

COMPLIANCE TESTING REPORT FOR QI CERTIFICATION

SGS

Report No.	F690501/RF-WPC000142	
Order No.	G-45-2016-01779	
Product Information	Product Category	Baseline Power Profile-Base Station
	Product Model Number	PWMA-W630A
	Qi Registration ID	1689
Licensee	**LG Electronics**	
Manufacturer	**LG Innotek YANTAI Co., Ltd.** No. 36, Taibei North Road, Development zone	
Testing Laboratory	Laboratory	SGS Korea Co., Ltd.
	Tested By: *Jessica Baek*	*Date* 2016-06-29
	Reviewed By *Elvin Lee*	*Date* 2016-06-29
Compliance Test Information	Testing Date	From 6/9/2016 to 6/9/2016
	Test Specification	The Qi Wireless Power Transfer System Power Class 0 Specification Part 3 : Compliance Testing Ver1.2.2 April 2016
	Result	PASS
Interoperability Test Information	Testing Center	Eurofins Digital Testing Belgium
	The date of issue	6/22/2016
	Test Specification	Qi Interoperability Test Specification v1.4
	Interoperability Pass ID	IDD06160557T

Copyright©. 2016. All Rights Reserved.

LG Innotek

This device is using inductive coupling method for wireless charging.
The max charging power is 5W (5V, 1A) at RX receiver Part.
Below table is for the detail efficiency, voltage and current of this device.

	Power Supply			Receiver			
Load (mA)	Voltage	Current	Power	Voltage	Current	Power	Efficiency
0	5	0.135	0.675	5.014	0	0.000	0.0%
100	5	0.271	1.355	5.005	0.1	0.501	36.9%
200	5	0.322	1.610	4.989	0.2	0.998	62.0%
300	5	0.434	2.170	4.976	0.3	1.493	68.8%
400	5	0.565	2.825	4.96	0.4	1.984	70.2%
500	5	0.665	3.325	4.947	0.5	2.474	74.4%
600	5	0.786	3.930	4.933	0.6	2.960	75.3%
700	5	0.921	4.605	4.917	0.7	3.442	74.7%
800	5	1.061	5.305	4.891	0.8	3.913	73.8%
900	5	1.215	6.075	4.888	0.9	4.399	72.4%
1000	5	1.362	6.810	4.844	1	4.844	71.1%

Copyright©. 2016. All Rights Reserved.

CUSTOMER : TPV

DATE : 2016. 06.21.

SPECIFICATIONS FOR APPROVAL

PRODUCT NAME : Wireless Charging Tx Module (WPC)

MODEL NAME : PWMA-W630A

CUSTOMER P/N : 317GWICM001LGT

APPROVAL	REMARK

APPENDIX

Designed	Checked	Approved	LG Innotek Co., Ltd.	
Approved by Electronic Approval System			DOCUMENT No.	SA01
H.M.Lee	S.H.Lee	Y.K. Kim	PAGE	19

Change History of Revision

Revision	Date	Contents of Revision Change	Remark
0.1	2016.03.10.	Initial Release	
0.2	2016.03.16.	General specification update	**Page 4.** » Updates general features of the product
0.3	2016.04.28.	General specification update LED Scenario update	**Page 4.** » Updates standby current to 10 mA **Page 6.** » Updates LED scenario
0.4	2016.05.26.	Packing Information update LED Scenario update General specification update	**Page 8-11.** » Packing Information Update **Page 6.** » Updates LED Color **Page 4.** » Updates general features of the product
	2016.06.15	General Specification Update	**Page 5-9.** » Image Update » add Page6 » Delete Effective Charging Area » Change Height Spec. 3.45 ± 0.25 » add PCB drawings
		Reliability Test update	**Page 10.** » add ESD Test
		Part List Update	**Page 11.** » add Part List
		Label Information Update	**Page 12.** » add CartonBox Label
		Packing Information update	**Page 16.** » add CartonBox Label
		Handling Update	**Page 18.** » add Handling

Change History of Revision

Revision	Date	Contents of Revision Change	Remark
0.5	2016.06.20.	F/W History of Revision General specification update	**Page 4.** » Update Revision **Page 7.** » Update DZ Spec.

F/W History of Revision

F/W	Date	Contents of Revision Change	Remark
lgit_wpc_a11_led_a_otp_29 april2016_4th_1p30v.hex	2016.04.29.	Initial Release	
lgit_wpc_a11_led_a_otp_20 june2016_1p30v.hex	2016.06.20	Apply CS100	

Table of Contents

Page

Revision History 02

1. General Description 06

2. General Features 08

2.1. Electrical

2.2. Mechanical

2.3. LED Scenario

2.4. PCB Drawings

3. Environmental Conditions For the Reliability Test.....11

4. Part List.....12

5. Label Information.....13

6. Packing Information..... 14

6.1. Outbox

6.2. CartonBox Packing

6.3. CartonBox Label

6.4. Pallets

7. Handling.....19

1. General Description (1/2)

Image

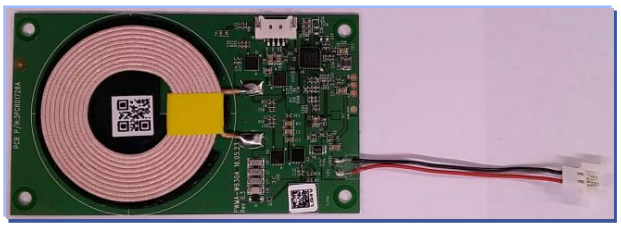

Features

- WPC V.1.2.2 Compliant (Low Power)
  - ✓ WPC A11-type Transmitter
- IDT IDTP9235 main controller adopted.
- 5 V input voltage is used.

Operating Voltage		4.75 ~5.25 V (DC)
Nominal Input Voltage		5.0 V (DC)
Input Current		Typical 1.8 A (2.0 A acceptable)
Standby Current (No load)		Typ. 10 mA (Max. 15 mA)
Operating Frequency		125 KHz ~ 205 KHz
Operating Temperature		0℃ ~ 45℃
Storage Temperature		-30℃ ~ 80℃
High Temperature Protection		60℃ ± 5%
Guarantee Received Power		Max 5W (Received Power)
Output Voltage		5 V
Output Current		Max 1 A
Dimension		50 mm(W) X 86 mm (L) X 3.45 mm (H)*
Weight		Bulk 24.8 g (Tol. ± 3 g)
Primary Coil	**Inductance (f=100 kHz, 1 V_{rms})**	6.3uH ± 10%
	D.C Resistance	Max. 70 mΩ

** The thickness H is measured on the Tx coil which is the thickest point of the module.*

1. General Description (2/2)

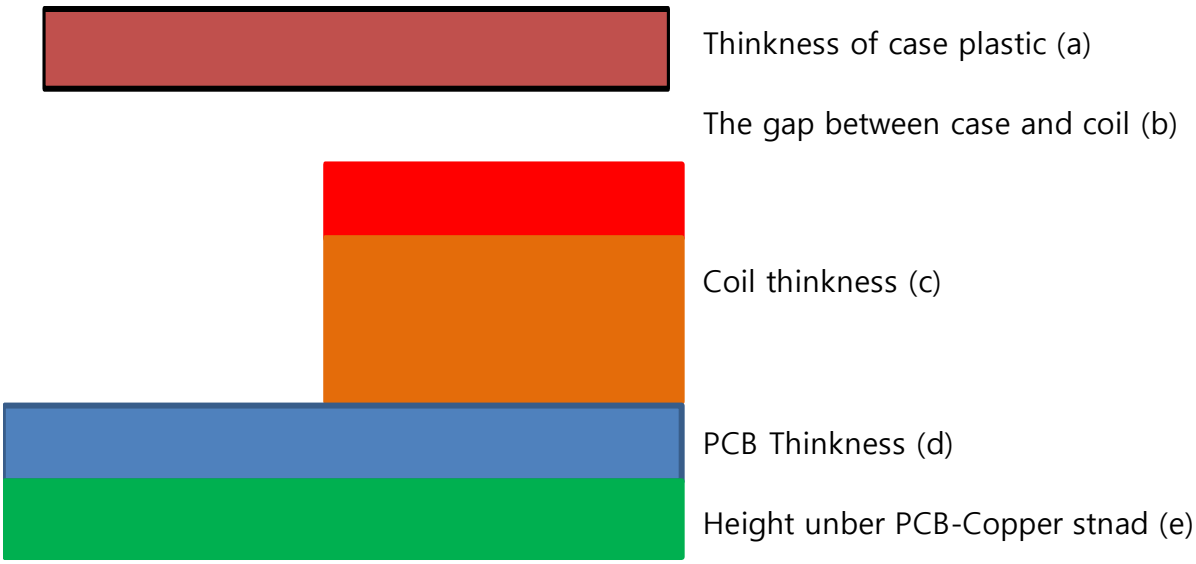

Item	Descript	Max	Min	Typical	Tolerance	Gap
a	Plastic case thickness	2.51	2.4	2.455	0.055	0.11
b	The gap between case and coil	0.95	0.24	0.595	0.355	0.71
c	Coil thickness	2.6	2.3	2.45	0.15	0.3
d	PCB thickness	1.1	0.9	1	0.1	0.2
e	Height under PCB-Cooper stand	0.35	0.25	0.3	0.05	0.1
f	Plastic case to metal tray height	4.4	4.29	4.345	0.055	0.11
g	DZ (Height of Coil top to plastic case top)	3.35	2.75	3.05	0.3	0.6

2. General Features

2.1. Electrical

NO	TEST ITEM	MIN.	Typ.	MAX.	UNIT	REMARK
1	Recognition time CTQ	-	1	3	Sec	The Time interval between TX and RX power on
2	System efficiency CTQ	60	65	-	%	Full load (5V, 1A) condition
3	Standby current		10	15	mA	No load condition

2.2. Mechanical

NO	ITEM		RATING	UNIT	REMARK
1	Outline	Width	50 ± 0.15	mm	
		Length	86 ± 0.15	mm	
		height	3.45 ± 0.25	mm	

2.3 LED Scenario.

Type	Orange LED	White LED
Power on	Blink 3 times in 3 seconds. (Turn off after blinks.)	Blink 3 times in 3 seconds. (Turn off after blinks.)
Standby	Off	Off
Charging	On	Off
Fully Charged	Off	On
Fault Detected	Off	Blink 2 times in 2 seconds. (Repeat it after 5 seconds.)
FOD	Off	Blink 4 times in 4 seconds. (Repeat it after 5 seconds.)

2.4. PCB Drawings(1)

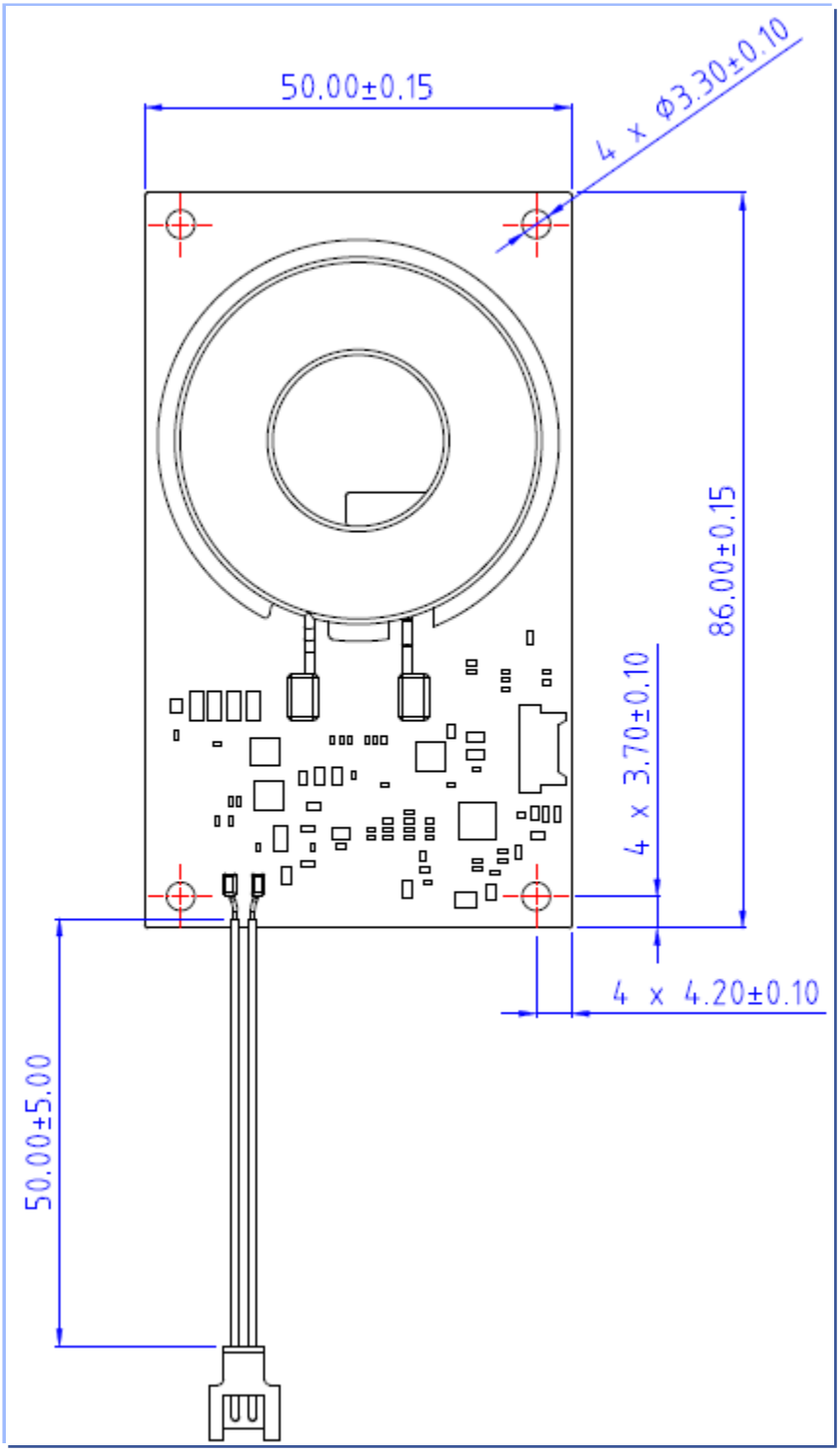

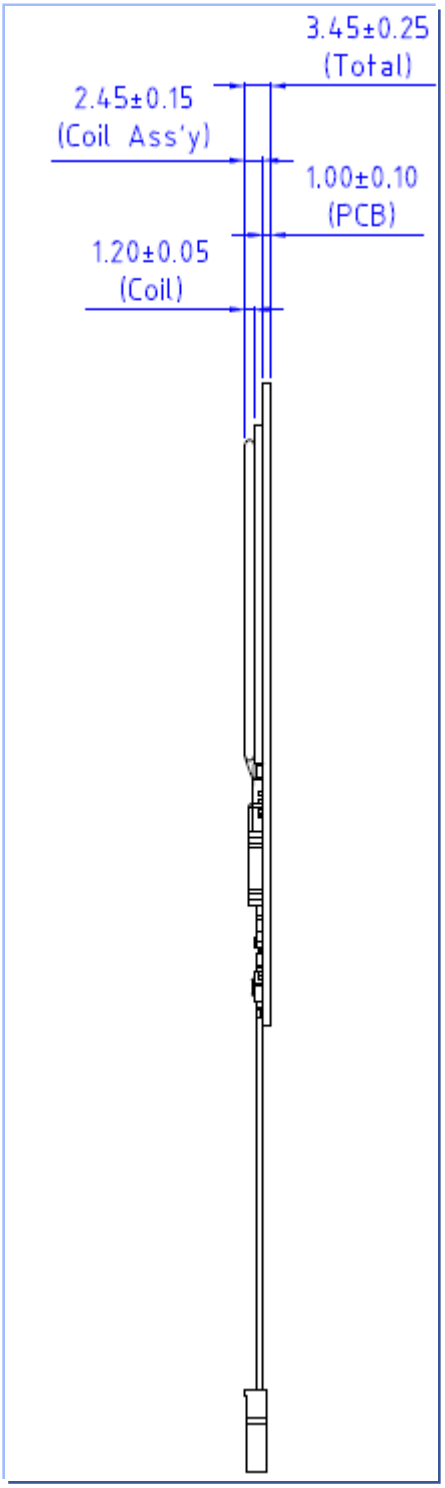

2.4. PCB Drawings(2)

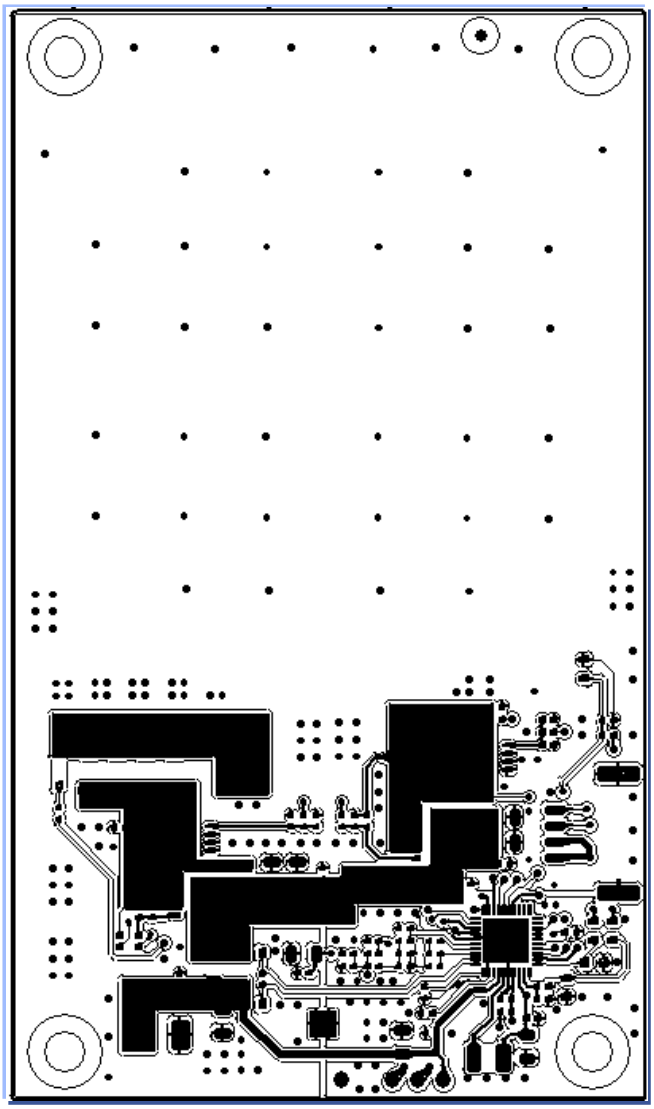

[Top layer]

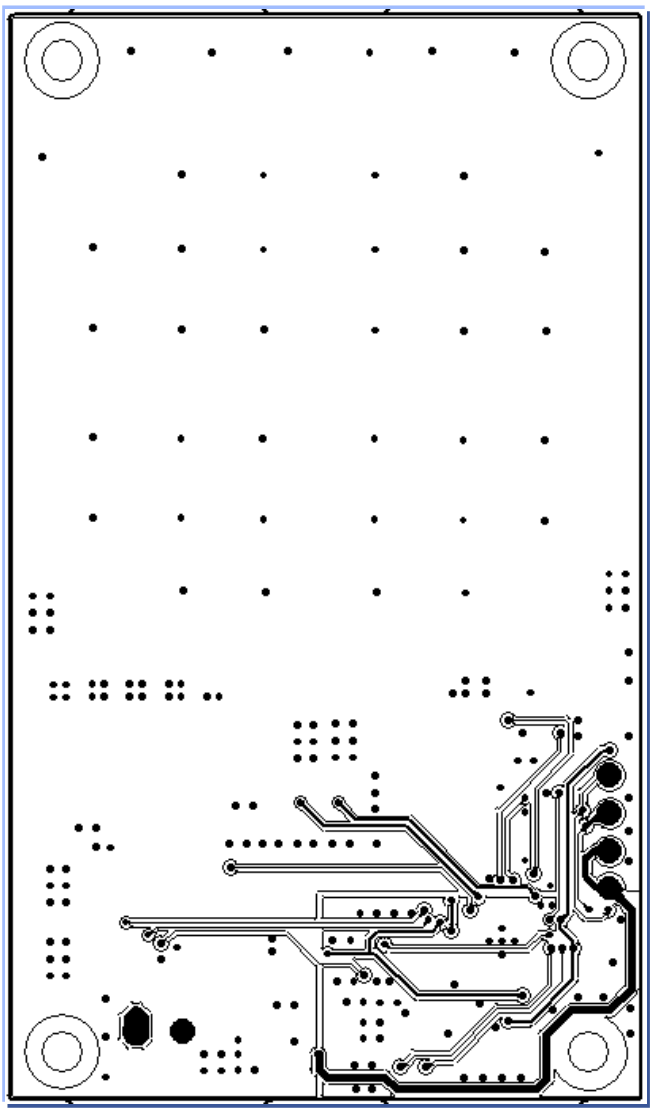

[Bottom layer]

3. Environmental Conditions for the Reliability Tests

Operating Test	The power Supply shall be capable of operating normally in any mode without malfunction happens in the following environmental condition
High Temperature /High Relative Humidity Operating Test	45℃ / 90%, 48Hr
Low Temperature Operating Test	0℃ , 48Hr
Room Temperature Aging	96Hr with TI Rx EVM (bq51013B)

Non operating	The Power supply be capable of withstanding the following environmental conditions extend period of time, without sustaining electrical or mechanical damage and subsequent operational deficiencies.
Low Temperature Storage Test	-30℃ ,96Hr (Cooling time 2Hr)
High Temperature Storage Test	80℃, 96Hr (Cooling time 2Hr) natural convection cooling
High Temperature/ High Relative Humidity Storage Test	80℃ / 80%, 96Hr (Cooling time 2Hr) natural convection cooling
Vibration Test	1.5mm, 10~55Hz, 2Hr per cycle for each axis (X, Y, Z) natural convection cooling
Thermal Shock Test	Repeat the Test 24cycle in the Following Sequences : 80℃ (30min) / -40℃ (30min)
ESD Test	Test Specification : Test Specification should be carried out 10 times to each terminal & case at resistance(330Ω) and capacitor(150pF). Contact discharge : Contact discharge should be carried out 10 times to each terminal & case with Max. ±10Kv (LED side ±2Kv) Air Discharge : Air discharge should be carried out 10 times to each terminal & case with Max. ±15Kv

4. Part List

No.	ITEM	Specifrication	Qty	Reference	Maker
1	Air Vinyl	Air Vinyl 380L*160W, 4t, LDPE(material), PINK Color	1	-	ANY VENDOR
2	Coil	ANTENNA ** A11 TX Coil, 6.3uH, 10%, outer 47.5mm	1	-	CLOVERHITECH
3	Barcode Label	Barcode Label, Whitepoly 7*7	1	-	ANY VENDOR
4	Chip Capacitor (MLCC)	CAP FLAT 10uF K 25V X5R 2012	8	C16,C18,C19,C2,C21,C23,C34,C5	ANY VENDOR
5	Chip Capacitor (MLCC)	CAP FLAT 0.1uF J 50V C0G 3216	3	C10,C17,C7	ANY VENDOR
6	Chip Capacitor (MLCC)	CAP FLAT 22nF J 50V C0G 3216	1	C9	ANY VENDOR
7	Chip Capacitor (MLCC)	CAP FLAT 33nF K 50V X7R 1005	2	C14,C49	ANY VENDOR
8	Chip Capacitor (MLCC)	CAP FLAT 100nF K 50V X7R 1005	6	C12,C13,C27,C39,C4,C8	ANY VENDOR
9	Chip Capacitor (MLCC)	CAP FLAT 2.2uF K 10V X5R 1005	1	C11	ANY VENDOR
10	Chip Capacitor (MLCC)	CAP FLAT 1.0NF K 50V X7R 1005	4	C1,C28,C29,C3	ANY VENDOR
11	Chip Capacitor (MLCC)	CAP FLAT 1.0uF K 25V X5R 1005	4	C20,C221,C24,C6	ANY VENDOR
12	Chip Capacitor (MLCC)	CAP FLAT 100NF K 16V X7R 1005	5	C219,C22,C25,C26,C33	ANY VENDOR
13	Chip Capacitor (MLCC)	CAP FLAT 2.2NF K 50V X7R 1608	2	C31,C32	ANY VENDOR
14	Chip Capacitor (MLCC)	CAP FLAT 220pF K 50V X7R 1005	2	C211,C214	ANY VENDOR
15	Chip Capacitor (MLCC)	CAP FLAT 22NF K 50V X7R 1005	1	C206	ANY VENDOR
16	Chip Capacitor (MLCC)	CAP FLAT 6.8NF K 50V X7R 1005	1	C212	ANY VENDOR
17	Chip Capacitor (MLCC)	CAP FLAT 5.6nF K 50V X7R 1005	1	C204	ANY VENDOR
18	Chip Capacitor (MLCC)	CARTON BOX ** CORRUGATED PAPER, 515*380*140㎜(W*L*H*T), Box Carton	0.018	-	ANY VENDOR
19	Connector	CONN. BtoB ** BOARDTOWIRE, 12513WR-04A00, 4Pin, 1.25㎜ PITCH	1	J6	YEONHO
20	Diode	DIODE SW ** KDS160, 0.3A, 85V, 1.2V, SINGLE CH, USC, T&R, 2Pin	1	D1	KEC
21	PowerCable	HARNESS ** WIRE, 2Pin, 2㎜ PITCH, TPV AOC향 모니터용 TX, UL1571 28#TS OD:0.9, 50mm	1	-	MORTECH
22	IC	IC POWER SUPPLY CIRCUIT ** INVERTER, IDTP9235, 5V, QFN-40, T&R, 5*5	1	U2	IDT
23	Packing Label	PACKING LABEL ** ART PAPER, 100*46㎜(W*L*T), WHITE, INNER BOX LABEL, RoHS, YT_LG INNOTEK CO., LTD(GWANGJU)	0.018	-	ANY VENDOR
24	Packing Label	PACKING LABEL ** PAPER, 110MMX300M㎜(W*L*T), BLACK, RIBBON BLACK WAX B220 (FOR PAPER LABEL)	0.00000343	-	ANY VENDOR
25	Inductor	POWER IND LQM2HPN4R7MG0 4.7uF M Idc=1.1A Rdc=0.11ohm 2520	1	L101	MURATA
26	Chip Resistor	RES FLAT 100K J 1/16 1005	4	R25,R27,R3,R7	ANY VENDOR
27	Chip Resistor	RES FLAT 10K J 1/16 1005	1	R206	ANY VENDOR
28	Chip Resistor	RES FLAT 12 J 1/16 1005	4	R22,R23,R26,R30	ANY VENDOR
29	Chip Resistor	RES FLAT 1K J 1/16 1005	2	R207,R211	ANY VENDOR
30	Chip Resistor	RES FLAT 220K F 1/16 1005	1	R205	ANY VENDOR
31	Chip Resistor	RES FLAT 270 J 1/10 1608	2	R1,R9	ANY VENDOR
32	Chip Resistor	RES FLAT 4.7 J 1/10 1608	2	R5,R6	ANY VENDOR
33	Chip Resistor	RES FLAT 4.7K F 1/10 1005	1	R10	ANY VENDOR
34	Chip Resistor	RES FLAT 560 J 1/10 1608	1	R212	ANY VENDOR
35	Chip Resistor	RES FLAT 5.1K F 1/16 1005	1	R2	ANY VENDOR
36	Chip Resistor	RES FLAT 0.02 F 1/4 3216	1	R4	ANY VENDOR
37	Ribbon	Ribbon Black 100mm*300m(Ribbon For White Poly)	0.00009	-	ANY VENDOR
38	PCB	RIGID PCB ** FR-4, DOUBLE, 50*86*1㎜(W*L*T), OSP, 2array	1	-	ANY VENDOR
39	Solder Cream	Solder Cream Sn/0.3Ag/0.5Cu/3.0Bi	0.001	-	ANY VENDOR
40	Solder Wire	Solder Wire HSE11-w HGF32SUPER Φ0.8	0.0015	-	ANY VENDOR
41	TAPE	TAPE OPP 50*50K	0.000538	-	ANY VENDOR
42	Thermistor	THERMISTOR ** NTC, NCP18XH103F0SRB, 10KΩ, 3380 ±1%K, 1608	1	TH1	MURATA
43	Transistor	TR FET ** DMG7430LFG, N, 30V, 9.2A, 15mΩ, POWERDI_3333-8, T&R, 3.3*3.3	4	Q1,Q2,Q3,Q4	DIODES
44	UV BOND	UV BOND	0.0005	-	ANY VENDOR

5. Label Information

5.1. PCB Barcode Label

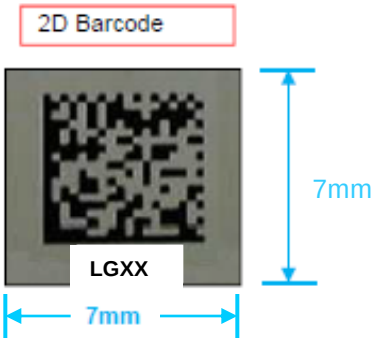

Marking	Date	Marking	Date	Marking	Date
1	1	B	11	M	21
2	2	C	12	N	22
3	3	D	13	P	23
4	4	E	14	Q	24
5	5	F	15	R	25
6	6	G	16	S	26
7	7	H	17	T	27
8	8	J	18	U	28
9	9	K	19	V	29
A	10	L	20	W	30
				X	31

L B 6 1 1 XXXXXXXX 0 0 0 1

- Serial No. (10 Digit No. 0001~ 9999)
- LGIT Part Number 8 unit places **(WMAW630A)**
- Production line (1, 2, 3 .....)
- Date : [1,2,3,4,5,6,7,8,9,A,B,C,D,E...V]
- Month : 1(Jan), 2(Feb), 3, ... 9(Sep), 10(Oct) : O, Nov : N, Dec : D
- Year : A,B,C,D,E,F,G,H,J,K,L,M,N,P,Q,R,S,T,U,V (B:2011, C:2012,)
- Supplier Code : (L : LGIT)

6. Packing Information

6.1. Outbox (1/2)

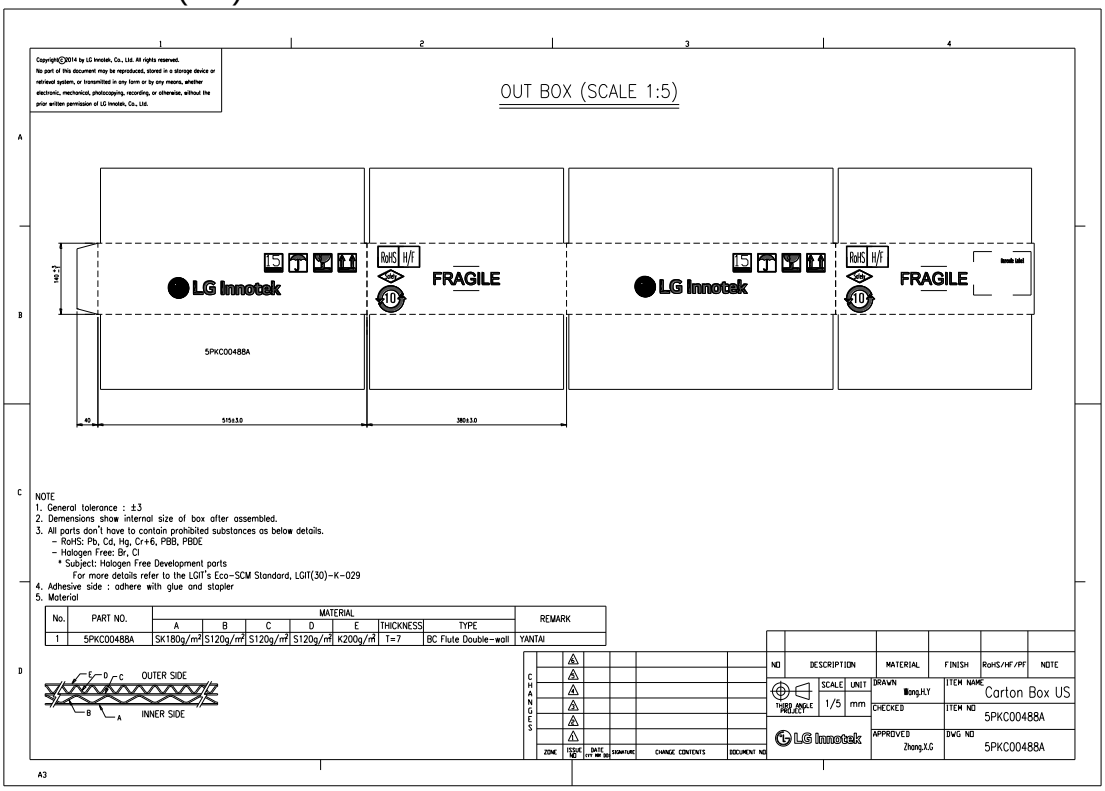

No.	PART NO.	MATERIAL A	B	C	D	E	THICKNESS	TYPE	REMARK
1	5PKC00488A	SK180g/㎡	S120g/㎡	S120g/㎡	S120g/㎡	K200g/㎡	T=7	BC Flute Double-wall	YANTAI

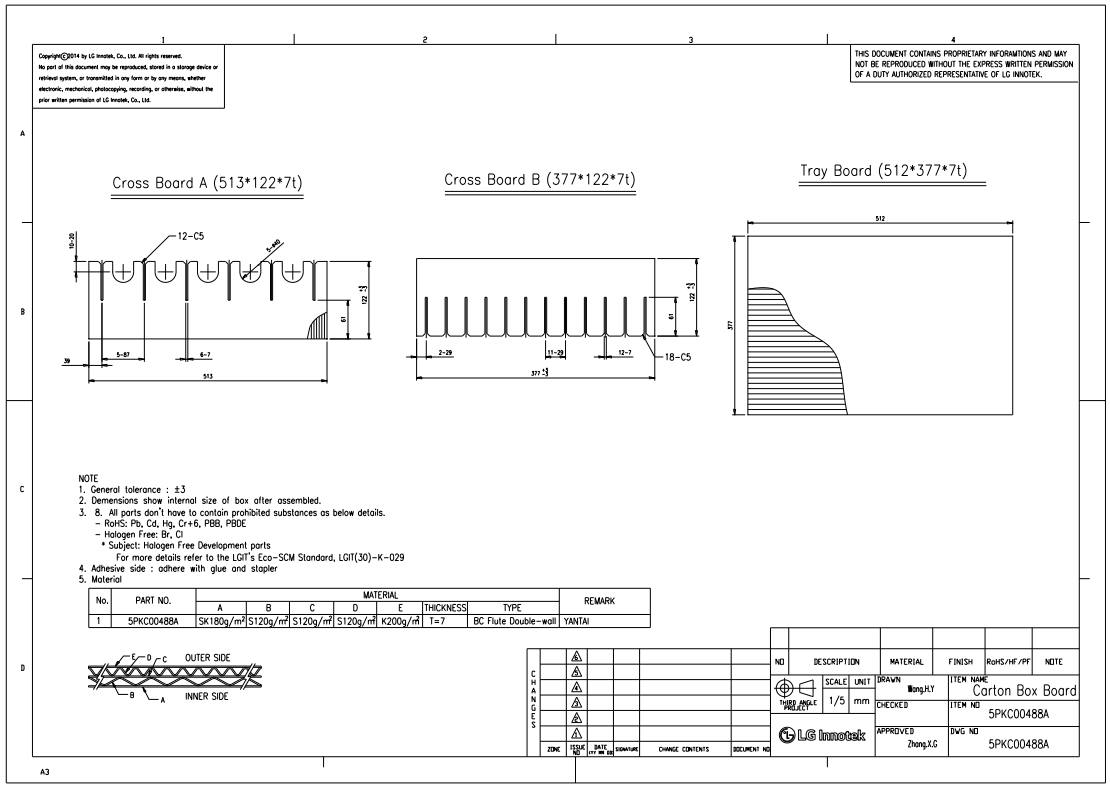

No.	PART NO.	MATERIAL A	B	C	D	E	THICKNESS	TYPE	REMARK
1	5PKC00488A	SK180g/㎡	S120g/㎡	S120g/㎡	S120g/㎡	K200g/㎡	T=7	BC Flute Double-wall	YANTAI

6. Packing Information

6.1. Outbox (2/2)

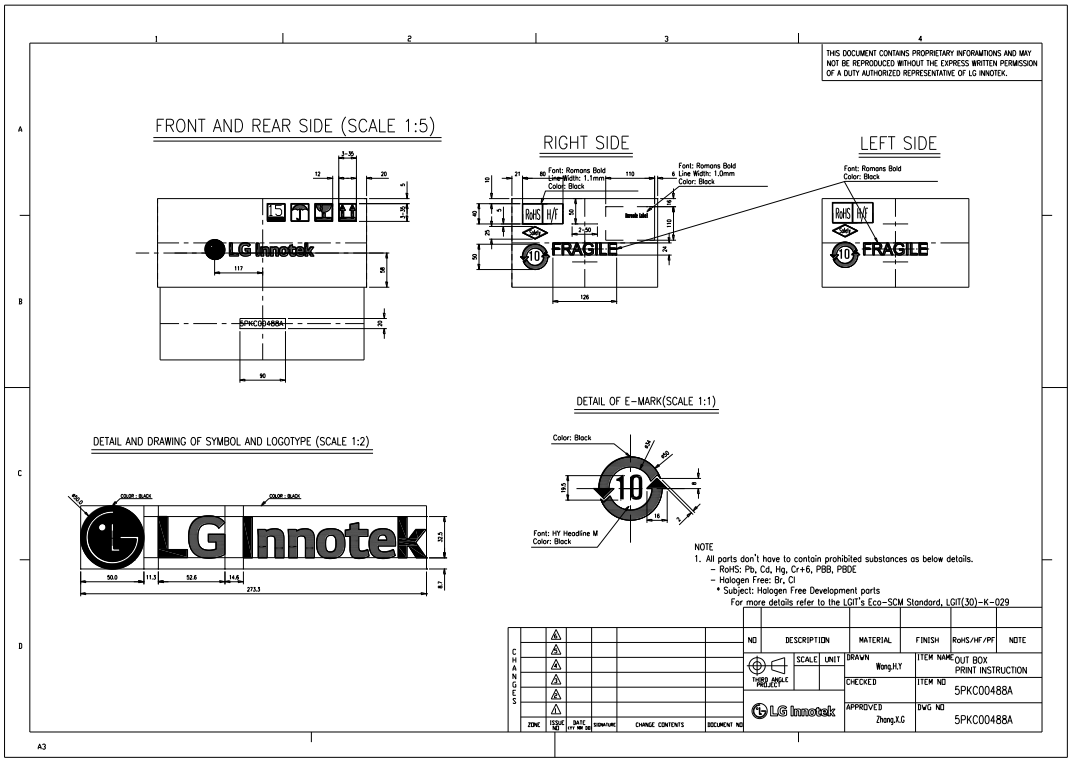

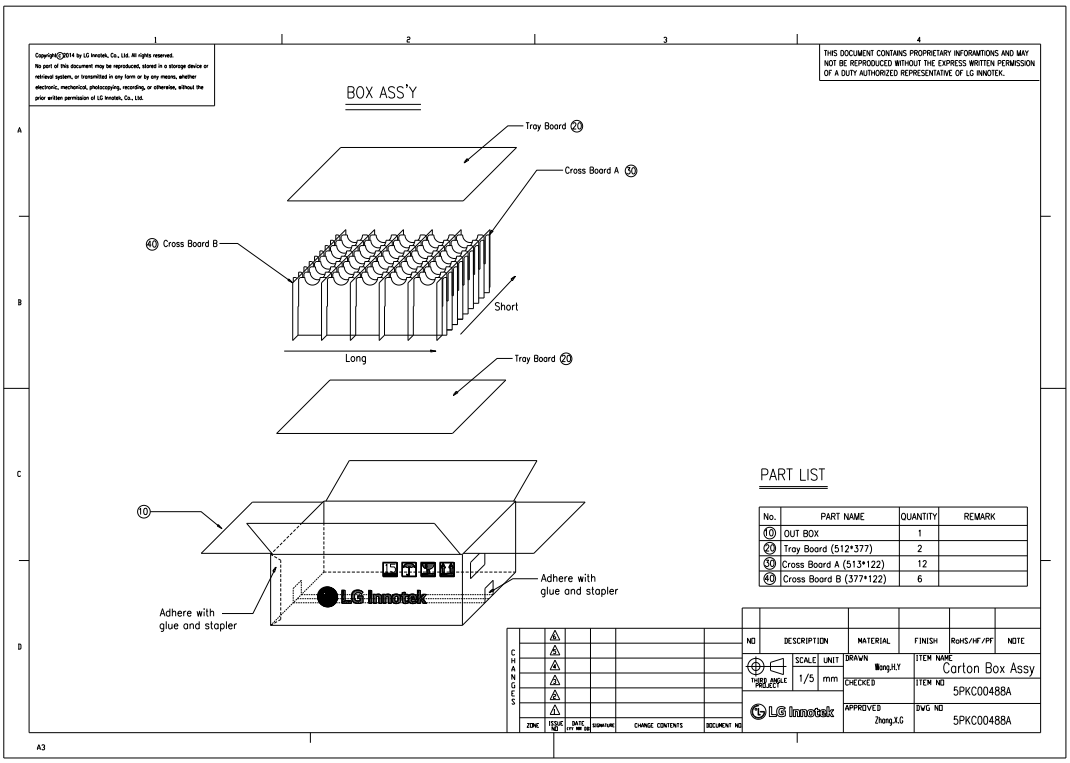

6. Packing Information

6.2. CartonBox packing

- 1 Carton Box = 55 Module Assy

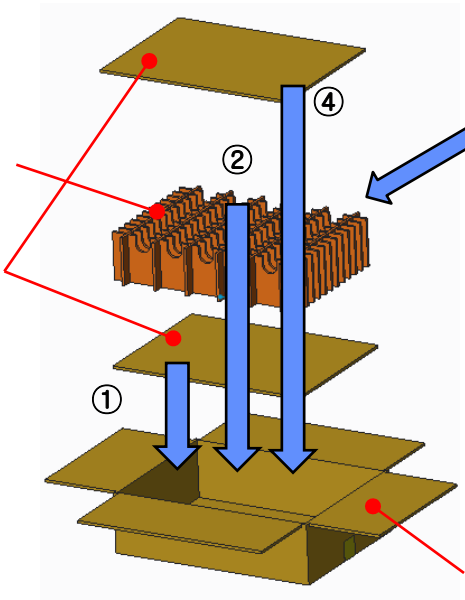

(3) Module Assy

(4) Out Box

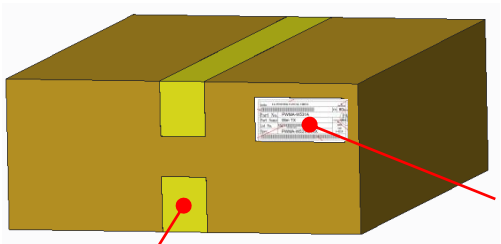

(6) Carton Box Label

(5) Tape OPP

No.	Item	Qty	Spec.
1	**Tray Board (5PKC00488A)**	2	1.Material : Double wall paper 7mm(BC) 2.Size : 512 x 377mm
2	**Cross Board (5PKC00488A)**	1	1.Material : Double wall paper 7mm(BC) 2.Size : 513 x 377 X 122mm
3	**Module packing**	55	11ea x 5ea = 55 ea
4	**Out box (5PKC00488A)**	1	1. Material : Double wall paper 7mm (BC) 2. Size : 515 x 380 x 140 mm
5	Carton Box Label (3320KP0053A)	1	1. Material : Art paper 2. Size : 100 x 46 mm
6	Tape OPP	1	1. Material : Opp tape

6. Packing Information

6.3. Carton Box Label

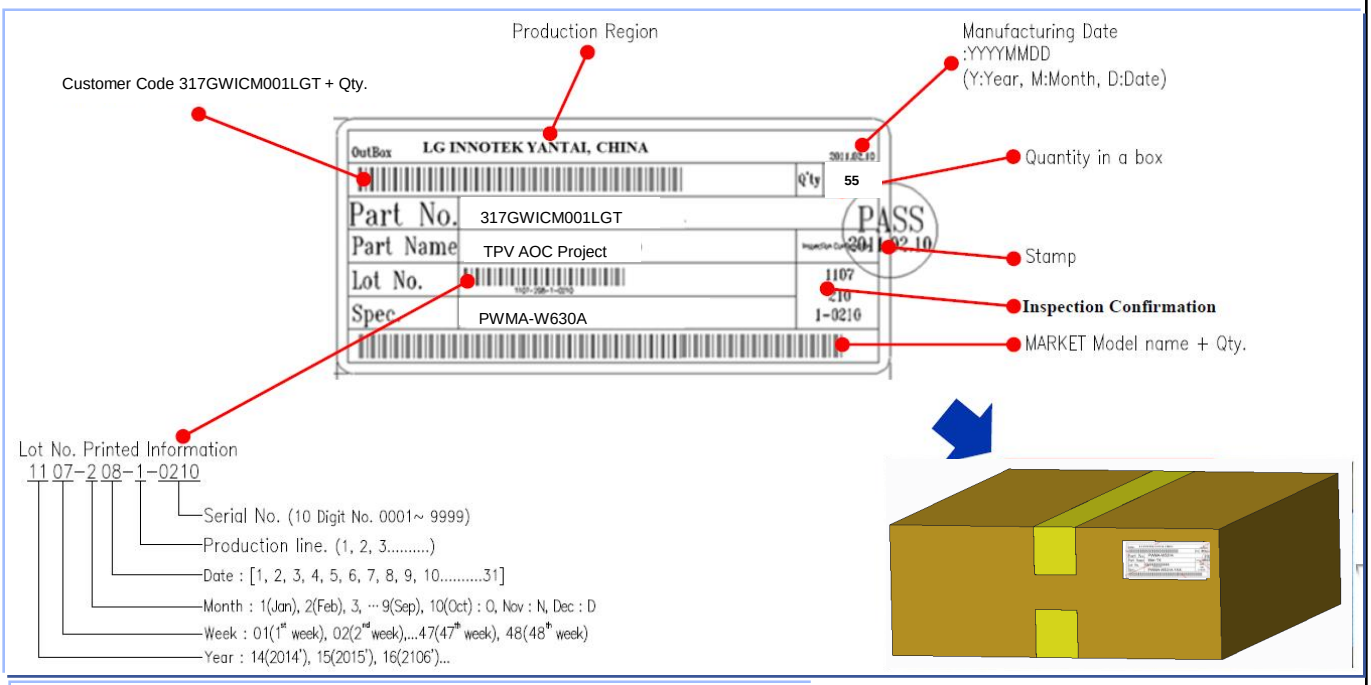

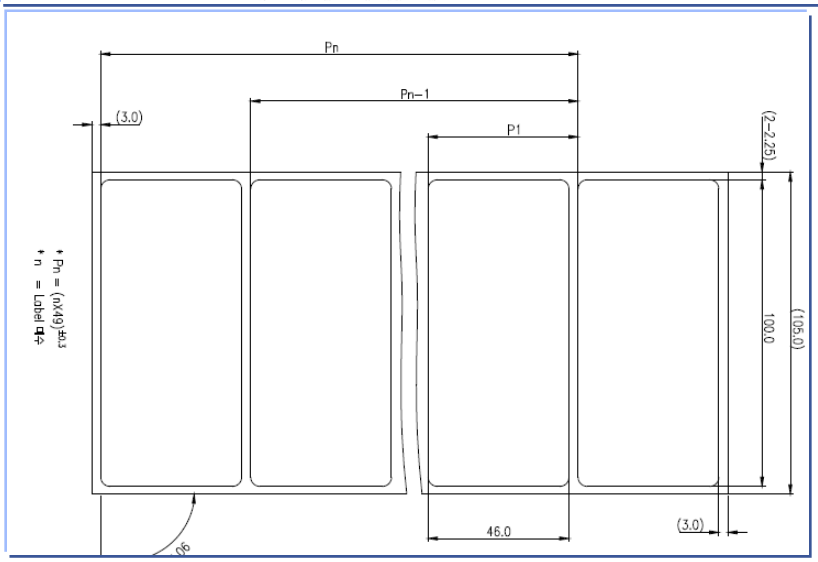

Notes

1. General Tolerances : ±0.3, R3.0
2. Material : ART Paper 0.1T, ±0.01
3. Any defects including oil, bubble, scratches, dents and marks on the printing sheet are not allowable.
4. 'CTQ' means CTQ (Critical to quality point)
5. All parts don't have to contain prohibited substances including RoHS hazardous substances(Pb,Cd,Hg,Cr+6,PBB,PBDE) and for more details refer to LGIT's Eco-SCM standard, LGIT(30)-K-029.
6. Any, and All changes to this part and or assembly must be approved by LGIT before being implemented.

6. Packing Information

6.4. Pallets

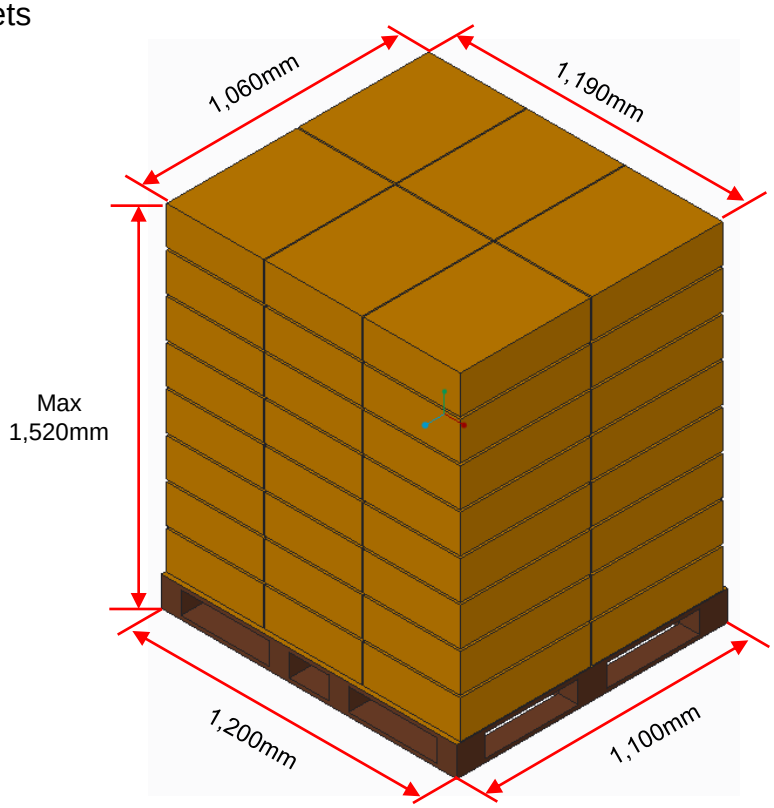

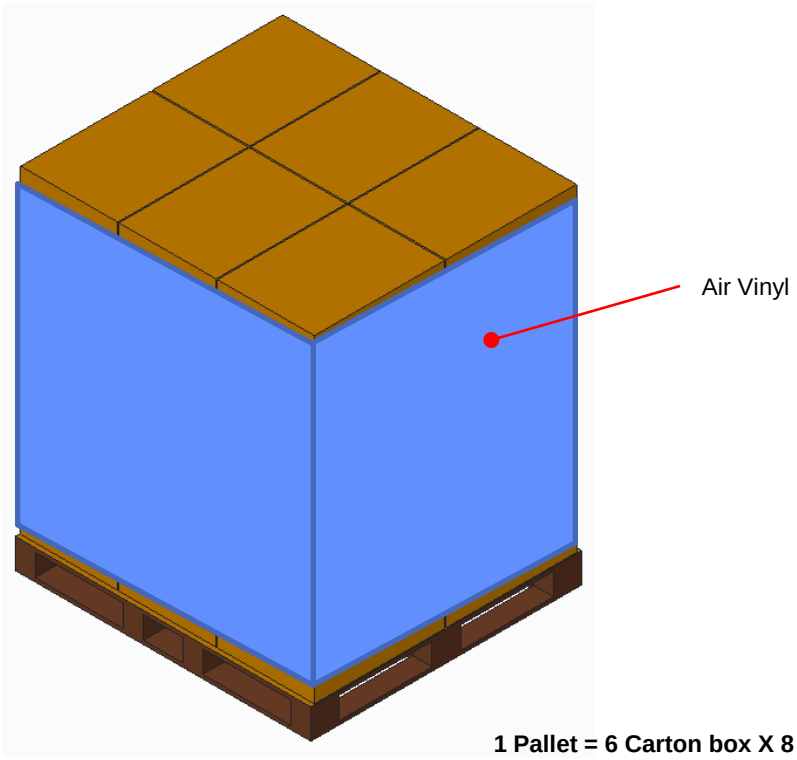

1 Pallet = 6 Carton box X 8 Layer = 2,640 Module
Pallet size : 1100 X 1200 mm

7. Handling

1) Do not apply high mechanical force or damage on the product.
2) Do not allow sharp or hard object to come in contact with product.
3) Do not store in high temperature or high humidity environments.
4) Do not store in corrosive gas atmosphere such as one containing sulfurous acid gas or alkaline gas.
5) Avoid any electrostatic shock to the product.
6) Avoid heat shock, vibration, direct sunlight, etc.