# Owner`s Manual

MAGNAVOX
SMART. VERY SMART.

15MF400T/37 Series
LCD TV

**NEED HELP?CALL US!**

MAGNAVOX REPRESENTATIVES ARE READY TO HELP YOU WITH ANY QUESTIONS ABOUT YOUR NEW PRODUCT. WE CAN GUIDE YOU THROUGH CONNECTIONS, FIRST-TIME SETUP, AND ANY OF THE FEATURES. WE WANT YOU TO START ENJOYING YOUR NEW PRODUCT RIGHT AWAY.

CALL US BEFORE YOU CONSIDER RETURNING THE PRODUCT.

1-800-705-2000

OR VISIT US ON THE WEB AT WWW.USASUPPORT.MAGNAVOX.COM

Important!

Return your Warranty Registration Card within 10 days.

## RETURN YOUR PRODUCT REGISTRATION CARD TODAY TO GET THE VERY MOST FROM YOUR PURCHASE.

Registering your model with MAGNAVOX makes you eligible for all of the valuable benefits listed below, so don't miss out. Complete and return your Product Registration Card at once to ensure:

### *Proof of Purchase

Returning the enclosed card guarantees that your date of purchase will be on file, so no additional paperwork will be required from you to obtain warranty service.

### *Product Safety Notification

By registering your product, you'll receive notification - directly from the manufacturer - in the rare case of a product recall or safety defect.

### *Additional Benefits of Product Ownership

Registering your product guarantees that you'll receive all of the privileges to which you're entitled, including special money-saving offers.

**MAGNAVOX**

***Congratulations on your purchase, and welcome to the "family!"***

**Dear MAGNAVOX product owner:**
Thank you for your confidence in MAGNAVOX. You've selected one of the best-built, best-backed products available today. We'll do everything in our power to keep you happy with your purchase for many years to come.
As a member of the MAGNAVOX "family," you're entitled to protection by one of the most comprehensive warranties and outstanding service networks in the industry. What's more, your purchase guarantees you'll receive all the information and special offers for which you qualify, plus easy access to accessories from our convenient home shopping network.
Most importantly, you can count on our uncompromising commitment to your total satisfaction.
All of this is our way of saying welcome - and thanks for investing in a MAGNAVOX product.

**P.S. To get the most from your MAGNAVOX purchase, you must return your Warranty Registration Card within 10 days. So please mail it to us right now!**

Know these **safety** symbols

This "bolt of lightning" indicates uninsulated material within your unit may cause an electrical shock. For the safety of everyone in your household, please do not remove product covering.

The "exclamation point" calls attention to features for which you should read the enclosed literature closely to prevent operating and maintenance problems.

**WARNING**: To reduce the risk of fire or electric shock, this apparatus should not be exposed to rain or moisture and objects filled with liquids, such as vases, should not be placed on this apparatus.

**CAUTION**: To prevent electric shock, match wide blade of plug to wide slot, fully insert.

**ATTENTION**: Pour éviter les choc électriques, introduire la lame la plus large de la fiche dans la borne correspondante de la prise et pousser jusqu'au fond.

### For Customer Use

Enter below the Serial No. which is located on the rear of the cabinet. Retain this information for future reference.
Model No._____
Serial No. _____

**MAGNAVOX** Visit our World Wide Web Site at http://www.usasupport.magnavox.com

# IMPORTANT SAFETY INSTRUCTIONS

**The present set had been designed and manufactured to assure personal safety. Improper use can result in electric shock or fire hazard. The safeguards incorporated with the present unit will protect you if you observe the following procedures when installation, operating and servicing. The present unit is fully transistorized and does not contain any element that can be repaired by user.**

## Read Before Operating Equipment

1. Keep these instructions.
2. Read all warnings.
3. Follow all instructions.
4. Do not use this apparatus near water.
5. Clean only with a dry cloth.
6. Do not block any of the ventilation openings. Install in accordance with the manufacturers instructions.
7. Do not install near any heat sources such as radiators, heat registers, stoves, or other apparatus (including amplifiers) that produce heat.
8. Do not defeat the safety purpose of the polarized or grounding type plug. A polarized plug has two blades with one wider than the other. A grounding type plug has two blades and third grounding prong. The wide blade or third prong is provided for your safety. When the provided plug does not fit into your outlet, consult an electrician for replacement of the obsolete outlet.
9. Protect the power cord from being walked on or pinched particularly at plugs, convenience receptacles, and the point where they exit from the apparatus.
10. Only use attachments/accessories specified by the manufacturer.
11. Use only with a cart, stand, tripod, bracket, or table specified by the manufacturer, or sold with the apparatus. When a cart is used, use caution when moving the cart/apparatus combination to avoid injury from tip-over.

12. The TV should be operated only from the type of power source indicated on the label. If you are not sure of the type of power supplied to your home, consult your dealer or local power company.
13. Unplug this apparatus during lightning storms or when unused for long periods of time.
14. Refer all servicing to qualified service personnel. Servicing is required when the apparatus has been damaged in any way, such as power-supply cord or plug is damaged, liquid has been spilled or objects have fallen into apparatus, the apparatus has been exposed to rain or moisture, does not operate normally, or has been dropped.
15. This product may contain mercury. Disposal of these materials may be regulated due to environmental considerations. For disposal or recycling information, please contact your local authorities or the Electronic Industries Alliance: www.eiae.org

16. **Damage Requiring Service** – The appliance should be serviced by qualified service personnel when:
    A. The power supply cord or the plug has been damaged; or
    B. Objects have fallen, or liquid has been spilled into the appliance; or
    C. The appliance has been exposed to rain; or
    D. The appliance does not appear to operate normally or exhibits a marked change in performance; or
    E. The appliance has been dropped, or the enclosure damaged.
17. **Tilt/Stability** – All televisions must comply with recommended international global safety standards for tilt and stability properties of its cabinets design.
    - Do not compromise these design standards by applying excessive pull force to the front, or top, of the cabinet, which could ultimately overturn the product.
    - Also, do not endanger yourself, or children, by placing electronic equipment/toys on the top of the cabinet. Such items could unsuspectingly fall from the top of the set and cause product damage and/or personal injury.
18. **Wall or Ceiling Mounting** – The appliance should be mounted to a wall or ceiling only as recommended by the manufacturer.
19. **Power Lines** – An outdoor antenna should be located away from power lines.
20. **Outdoor Antenna Grounding** – If an outside antenna is connected to the receiver, be sure the antenna system is grounded so as to provide some protection against voltage surges and built up static charges.

    Section 810 of the National Electric Cord, ANSI/NFPA No. 70-1984, provides information with respect to proper grounding of the mats and supporting structure grounding of the lead-in wire to an antenna-discharge unit, size of grounding connectors, location of antenna-discharge unit, connection to grounding electrodes and requirements for the grounding electrode. See Figure below.

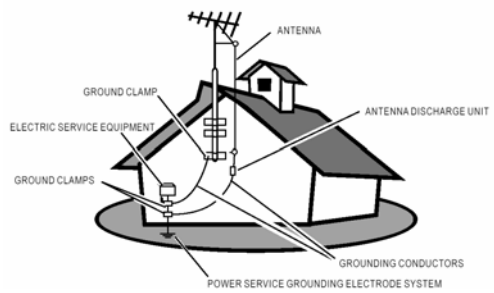


EXAMPLE OF ANTENNA GROUNDING AS PER NATIONAL ELECTRICAL CODE

Note to the CATV system installer: This reminder is provided to call the CATV system installer's attention to Article 820-40 of the NEC that provides guidelines for proper grounding and, in particular, specifies that the cable ground shall be connected to the grounding system of the building, as close to the point of cable entry as practical.

22. **Objects and Liquid Entry** – Care should be taken so that objects do not fall and liquids are not spilled into the enclosure through openings.

# TABLE OF CONTENT


## INSTRODUCTION

WELCOME / REGISTRATION OF YOUR TV----------2
IMPORTANT SAFETY INSTRUCTIONS----------3
TABLE OF CONTENT---------- 5

## INSTALLATION

PRESENTATION OF THE LCD TV ----------6-7
SUPPLIED ACCESSORIES ----------8
REMOTE CONTROL OPERATION----------9
INSTALLING LCD TV ON THE WALL ----------10
GETTING STARTED ----------11
OSD SETTING ----------12
CONNECT VIDEO RECORDER ----------13
CONNECT CAMERA /CAMCORDER/ VIDEO GAME SET ----------13
CONNECT DVD PLAYER ---------- 14
CONNECT DIGTAL SET TOP BOX ----------14

## TV SET UP MENU

TV CHANNEL INSTALLATION ----------15
CHANNEL EDIT ----------16
SLEEP TIMER----------16
CLOSED CAPTION ----------17
CHANNEL LOCK ----------17-20

**SOUND SET UP MENU** ----------21-22
**PICTURE SET UP MENU** ----------23-24
**PC SET UP MENU -**----------25-26

## GENERAL INFORMATION

TIPS ----------27
CALL BEFORE SERVICE----------28
GLOSSARY ----------29
PRODUCT SPECIFICATION----------23-31
LIMITED WARRANTY----------32


THANK YOU VERY MUCH FOR CHOOSING THE LCD TV.
WE RECOMMEND THAT YOU TAKE A FEW MINUTES TO READ CAREFULLY THROUGH THIS MANUAL BEFORE INSTALLING AND SWITCHING ON THE TV. PLEASE KEEP THIS MANUAL IN A SAFE PLACE FOR YOUR FUTURE REFERENCE.

## FOR YOUR SAFETY

Before operating the TV please read this manual thoroughly. This manual should be retained for future reference.

## FCC Class B Radio Frequency Interference Statement
## WARNING: (FOR FCC CERTIFIED MODELS)

**NOTE:** This equipment has been tested and found to comply with the limits for a Class B digital device, pursuant to Part 15 of the FCC Rules. These limits are designed to provide reasonable protection against harmful interference in a residential installation. This equipment generates, uses and can radiate radio frequency energy, and if not installed and used in accordance with the instructions, may cause harmful interference to radio communications. However, there is no guarantee that interference will not occur in a particular installation. If this equipment does cause harmful interference to radio or television reception, which can be determined by turning the equipment off and on, the user is encouraged to try to correct the interference by one or more of the following measures:

1. Reorient or relocate the receiving antenna.
2. Increase the separation between the equipment and receiver.
3. Connect the equipment into an outlet on a circuit different from that to which the receiver is connected.
4. Consult the dealer or an experienced radio/TV technician for help.

**NOTICE**

1. The changes or modifications not expressly approved by the party responsible for compliance could void the user's authority to operate the equipment.
2. Shielded interface cables and AC power cord, if any, must be used in order to comply with the emission limits.
3. The manufacturer is not responsible for any radio or TV interference caused by unauthorized modification to this equipment. It is the responsibilities of the user to correct such interference.

As an ENERGY STAR® Partner Envision Peripherals, Inc. has determined that this product meets the ENERGY STAR® guidelines for energy efficiency.

**WARNING:**

To prevent fire or shock hazard, do not expose the TV to rain or moisture. Dangerously high voltages are present inside the TV. Do not open the cabinet. Refer servicing to qualified personnel only.

# INSTALLATION

## PRESENTATION OF THE LCD TV

### ▪ Front Panel Control Knobs

| | | |
|---|---|---|
| ① | **Source Key** | Press to select your input source. |
| ② | **< / > Key** | Press to confirm your function selection and adjust the volume |
| ③ | **∧ / ∨ Key** | Press to perform select function and TV channel |
| ④ | **MENU Key** | Press to show the OSD menu and exit OSD menu at the TV. |
| ⑤ | **Power Key** | Press to turn on or off the TV. |

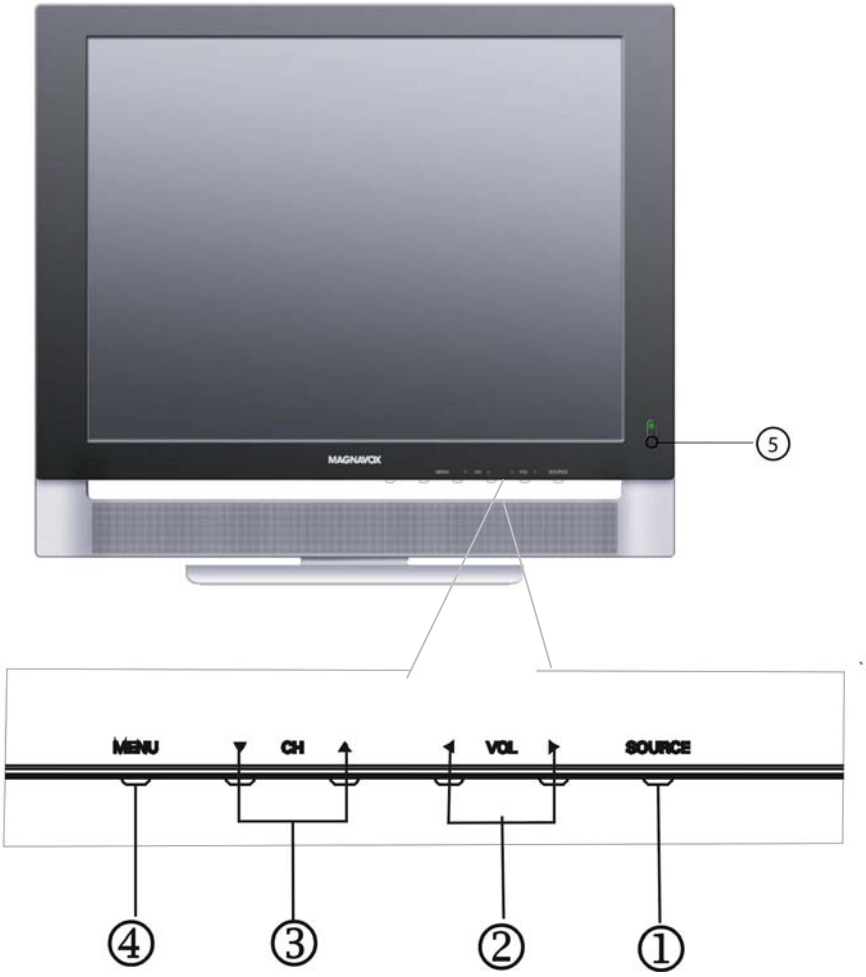

▪ **Preparation**

Remove the back plate at the back of the TV as shown on the illustration opposite. Lay the LCD TV with the screen down on a table, as it will be easier to connect your peripheral equipment. Please take precaution not to damage the screen.

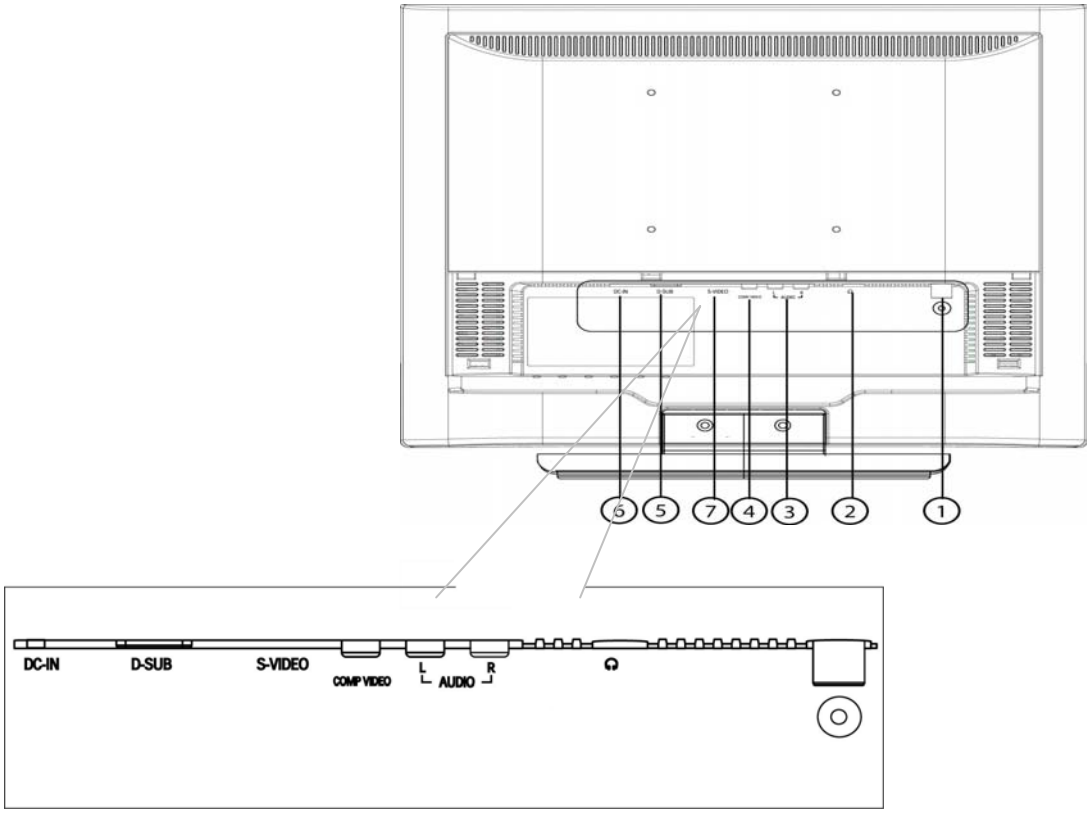


| | | |
|---|---|---|
| ① | ◎ | TV input |
| ② | 🎧 | Earphone jack |
| ③ | **Audio R/L** | Audio Right /Left Channel input |
| ④. | **COMP VIDEO** | AV Input |
| ⑤. | **D-SUB** | PC Input |
| ⑥ | **DC-IN** | 12V DC Power Input |
| ⑦ | **S-VIDEO** | S-VIDEO Input |

## SUPPLIED ACCESSORIES

| | |
|---|---|
| | |
| **Power/ adapter** | **Remote control** |
| | |
| **Owner's Manual** | **Warranty card** |

## REMOTE CONTROL OPERATION

**POWER button:**
Press to turn on/off the TV

**CHANNEL button**
Press to adjust the channel up or down.

**VOLUME button**
Press to adjust the sound level

**PC button**
Press to switch on your PC signal.

**SLEEP button**
Press to set the LCD TV to turn itself off within a certain time.

**MENU button**
Press repeatedly to display main menu, and also exit OSD function

**V-CHIP button**
Press this button to setup parental control.

**PIP/POP button**
Not applicable

**DISPLAY button**
Press to "display" channel number on the screen

**MUTE button**
Press to eliminate or restore the LCD TV sound

**Number button**
Press to select TV channels

**R button**
Press to display the previously selected TV channel

**TV/VIDEO button**
Select your video input source

**MTS /SAP button**
Press to select sound mode if available with TV program: Mono, Stereo or SAP

**CAPTION button**
Press to "activate" closed Caption.

**SIZE/SWAP button**
Not applicable

## INSTALLING LCD TV ON THE WALL

***Before you can install your LCD TV on the wall, you MUST first remove the base using the steps below:***

1. Place the set facing down on a flat surface with a protective sheet or cloth the TV.
2. Remove twos crews from the base, grasp the base and pull it out.

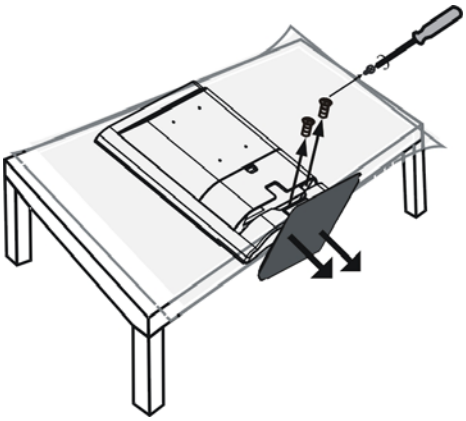

When installing the LCD TV on the wall, please consult a professional technician for proper installing. The manufacture accepts no liability for installations not performed by professional technician.

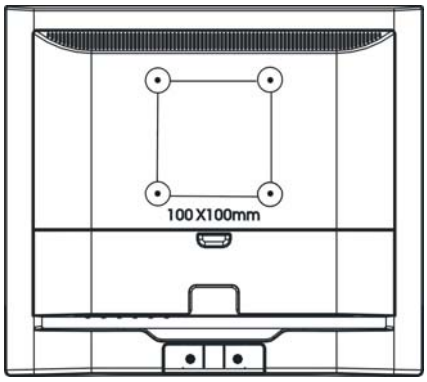

## GETTING STARTED

**1. Place the TV on a sturdy surface.**

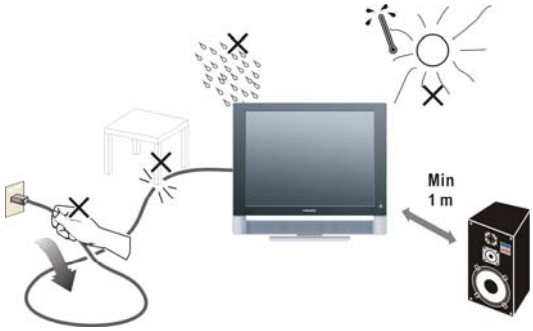


***Note:*** Ensure that the TV is placed in a position to allow free flow of air. Do not cover the ventilation openings on the back cover.

To prevent any unsafe situations, no naked flame sources, such as lighted candles, should be placed on or in the vicinity.

Avoid heat, direct sunlight and exposure to rain or water. The equipment shall not be exposed to dripping or splashing.

**2. Connect the antenna to the TV jack ◎ on the rear of LCD TV**

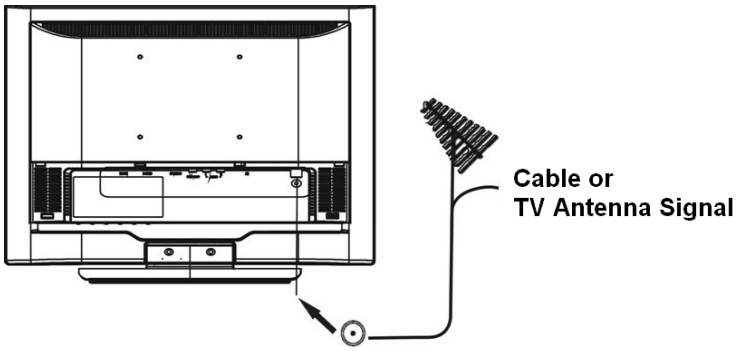


**3. Battery Installation:**

Remove the battery compartment lid. Place 2 AAA batteries in the remote.

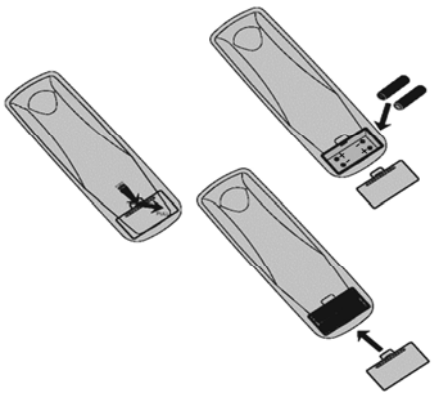

**4. Plug the DC adaptor into DC IN 12V jack on the LCD TV**

Plug the power cable into an outlet and switch TV set on.

**5. Press the power button to turn on the TV**

**6. Run the Auto Scan function to install your LCD TV channels(Refer to Page15)**

## OSD SETTING

**1. Press "MENU" key to open OSD menu**

**2. Press > or < key to select "OSD SETUP" option**

**3. Press ^ or v key to select submenu**

**OSD Setup**

**REMOTE CONTROL**

▪ **Language**

1. Press ^ or v key to select "Language" option

2. Press > or < key to select language, there are three kinds of language to select :English、French、 and Spanish

3. After adjustment, press "MENU" key to exit or press ^ or v key to adjust other options

▪ **H_Position**

1. Press ^ or v key to select "H Position" option

2. Press > or < key to adjust OSD horizontal position

3. After adjustment, press "MENU" key to exit or press ^ or v key to adjust other options

▪ **V_Position**

1. Press ^ or v key to select "V Position" option

2. Press > or < key to adjust OSD vertical position

3. After adjustment, press "MENU" key to exit or press ^ or v key to adjust other options

▪ **Time_out**

1. Press ^ or v key to select "Time out " option

2. Press > or < key to adjust OSD display time

3. After adjustment, press "MENU" key to exit or press ^ or v key to adjust other options

▪ **Background**

1. Press ^ or v key to select "Background" option

2. Press > or < key to adjust OSD background

3. After adjustment, press "MENU" key to exit or press ^ or v key to adjust other options

▪ **Information ： This option can only be operated on PC signal source**

1. Press ^ or v key to select "Information" option

2. Press > or < key then the screen will display the current input information

3. Press "MENU" key to exit information menu

## CONNECT VIDEO RECORDER

### How to connect:

1. Connect the antenna to VCR RF input
2. Connect the other RF cable from VCR output to TV input ; if you connect the VCR video frequency to TV's AV input connector, you will get the better quality of video and audio
3. TV's AV input **COMP VIDEO** does not provide audio frequency, so you need to connect VCR audio frequency output to TV's audio frequency input **AUDIO**

### If your VCR is equipped with S-VHS video port:

For improved picture quality, connect an S-Video cable with the S-VIDEO input on the TV instead of connecting the VCR to the VIDEO port.

S-Video does not provide audio, audio cables must still be connected to provide sound

### Watching VCR

1. If you use TV connection, select the TV channel search.
2. If you use AV connection, select AV
3. If you use S-Video connection. Select s-video
4. Insert videotape in the VCR and press the PLAY button

## CONNECT CAMERA /CAMCORDER/ VIDEO GAME SET

1. Connect the video output port of Camera /Camcorder/ Video Game Set to the AV input of TV
2. Connect the left and right audio channels of Camera /Camcorder/ Video Game Set to the left and right channels of audio input of TV

If your Camera /Camcorder/ Video Game Set is equipped with S-VHS video port:

For better quality picture, please connect the S-Video cable to the S-Video input of TV. Connect the left and right channels of Camera /Camcorder/ Video Game Set to the left and right channels of audio input of TV

### How to play

If you use AV connection, please select AV;

If you use S-Video connection, please select S-VIDEO;

## CONNECT DVD PLAYER

1. Connect the video output port of DVD player to the AV input port of TV
2. Connect the left and right audio channels of DVD to the left and right channels of audio input of TV

If your DVD player is equipped with S-VHS video port:
For better quality picture, please connect the S-Video cable to the S-Video input of TV. Connect the left and right channels of DVD to the left and right channels of audio input of TV

### How to play

If you use AV connection, please select AV;
If you use S-Video connection, please select S-VIDEO;

## CONNECT DIGTAL SET TOP BOX

### How to connect

1. Connect the video output port of Digital Set Top Box to the AV input of TV
2. Connect the left and right audio channels of Digital Set Top Box to the left and right channels of audio input of TV

### How to use

1. Select AV.
2. Turn on the DTV Set Top Box set.

***Note:*** ***In case you notice scrolling images, wrong colors or no color, no picture or even combinations of these, on your screen, check if the connections are done in the right way. Check if the cable colors match with the Input connector colors.***

# TV SET UP MENU

**1、 Press" MENU" key to open OSD menu**

**2、 Press > or < key to select "TV SETUP" option**

**3、 Press ^ or v to select submenu**

***Note:*** **Air/Cable, Auto Scan, Current Program，Sleep Time option can only display on TV Source**

## TV CHANNEL INSTALLATION

**▪ AIR/Cable**

1. Press" MENU" key to open OSD menu
2. Press > or < key to select "TV SETUP" option
3. Press ^ or v key to select "AIR/CATV" option
4. Press > or < key to select the automatic search system that your TV need, there are four options:

| | |
|---|---|
| CATV: | Community Antenna Television |
| AIR: | Over the Air |
| HRC: | Harmonically Related Carrier |
| IRC: | Incrementally Related Carrier |

5. Press "MENU" key to exit AIR/CATV menu or press ^ or v key to adjust other options

***Note:*** Please run the auto scan function to set up the TV for the broadcast or cable channels available in your area. If you do not run the auto scan function to set up the channels, your television may not operate properly.

**▪ Auto scan**

Channel auto search and memorize all viewable channel.

1. Press"MENU" key to open OSD menu
2. Press > or < key to select "TV SETUP" option
3. Press ^ or v key to select "Auto scan" option
4. Press > or < key to select auto search.

***Note:*** Please run the auto scan function to set up the TV for the broadcast or cable channels available in your area. If you do not run the auto scan function to set up the channels, your television may not operate properly.

## CHANNEL EDIT

**▪ Add/Erase**

1. Press" MENU" key to open OSD menu
2. Press > or < key to select "TV SETUP" option
3. Press ^ or v key to select "Add/Erase" option
4. Press > or < key to select Add or Erase.
5. Press "MENU" key to exit Add/Erase menu or press ^ or v key to adjust other options

**▪ Current Program**

Current program is the channel set by the current TV, you can press "display" key to display the current channel on the top right of the screen.

1. Press" MENU" key to open OSD menu
2. Press > or < key to select "TV SETUP" option
3. Press ^ or v key to select "Current program" option
4. Press > or < key to select the channel.
5. Press "MENU" key to exit Current Program menu or press ^ or v key to adjust other options

You can also press the digital keys 0-9/100 or channel ^ or v on the remote control to select channel

## SLEEP TIMER

1. Press" MENU" key to open OSD menu
2. Press > or < key to select "TV SETUP" option
3. Press ^ or v key to select "Sleep Time" option
4. Press > or < key to select the sleep time that you need to set , you can select 30/60/90/120 minutes sleep time.
5. Press "MENU" key to exit sleep time menu or press ^ or v key to adjust other options

***Note:*** You can also press "SLEEP" on the remote control , the sleep time will display on the top right of the screen.

## CLOSED CAPTION

1. Press" MENU" key to open OSD menu
2. Press > or < key to select "TV SETUP" option
3. Press ^ or v key to select "Closed caption" option
4. Press > or < key to set CC1~CC4 and TT1 and TT4.
5. Press "MENU" key to exit Closed Caption menu or press ^ or v key to adjust other options

You can also press "Caption" on the remote control, enter Closed Caption menu directly, then press step 4 to adjust.

**Caption Mode:** CC1~CC4

Dialogue (and descriptions) for the action on the captioned TV program shows on screen.

**Text Mode:** TT1~TT4

Often used for channel guide, schedules, bulletin board information for Closed Caption programs, news, weather information or stock marker reports.

Not all Closed Caption modes are necessarily being use by a TV channel during the transmission of a Closed Caption program.

## CHANNEL LOCK

▪ **V-Chip**

It is the parental control function (V-chip). It is used to block program viewing based on the ratings by the broadcaster. The default setting is to allow all programs to be viewed. Viewing can be blocked by the type of program and by the categories chosen be blocked. It is also possible to block all program viewing for a time period.

1. Press" MENU" key to open OSD menu

2 Press > or < key to select "TV SETUP" option

3. Press ^ or v key to select "V _Chip" option
4. Press > or < key to enter V _Chip password validation menu.

You can press V-CHIP key on the remote control to enter the menu directly.

Press digital keys on the remote control; enter the password to go into V-CHIP control menu

(Default pass code for V-Chip: 0711 and should press twice time)

If your password is error, then the screen will display “PIN ERROR”.

5. After enter the V-CHIP menu, press ^ or v key to select, if you want to set V-CHIP, you need to set the “status” on the condition of “ON”.

1) Press > or < key to select “Status” option
2) Press > or < key to select “ON” or “OFF”

6. TV Guideline Setting

1) Press ^ or v key to select “TV Guideline” option
2) Press > or < key to enter “TV Guideline” menu
3) Press ^ or v key to select block item.
4) Press > or < key to select U or B, selecting U means “Unlock”, selecting B means “Block”.
5) If the setting is OK, press “MENU” key to exit TV-Guideline menu.

7. Movie Guideline Setting

1) Press ^ or v key to select “Movie Guideline” option.
2) Press > or < key to enter Movie Guideline menu.
3) Press ^ or v key to select block item.
4) Press > or < key to select U or B, selecting U means “Unlock”, selecting B means “Block”.
5) If the setting is OK, press “MENU” key to exit Movie Guideline menu.

8. Change PIN

1) Press ^ or v key to select “Change PIN” option
2) Press > or < key to enter Change PIN menu.
3) Press digital keys on the remote control , then enter the new password.

4) Enter the new password again, if the setting is OK, the display information as below, then it will exit the Change PIN menu automatically.

▪ **Reset to Default**

1. Press “MENU” key to open OSD menu.
2. Press > or < key to select any Setup options
3. Press ^ or v key to select “Reset to Default” option.
4. Press > or < key to reset.

Reset to Default is convenient for all settings in the user OSD to recall to factory default data.

***Note:*** The reset to default function in each function item are the same under the signal source of AV/TV/S-VIDEO.

When we select the Reset to Default in each function item under the PC signal source, it not only recall all data to default data, but also have an adjustment automatically.

## SOUND SET UP MENU

**1. Press “MENU” key to open OSD menu.**

**2. Press > or < key to select “Audio Setup” option**

**3. Press ^ or v key to select submenu.**

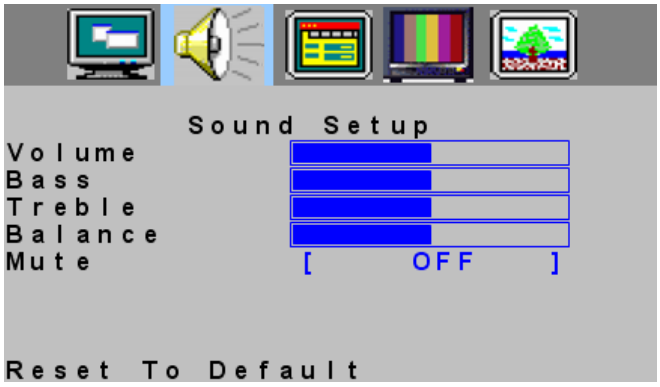

**▪ Volume**

1. Press “MENU” key to open OSD menu.
2. Press > or < key to select “Sound Setup” option.
3. Press ^ or v key to select “Volume” option
4. Press > or < key to adjust Volume data.

You can also press Volume ^ or v key and > or < key on the remote control to adjust volume.

5. Press “MENU” to exit or press ^ or v key to adjust others

**▪ Bass**

1. Press “MENU” key to open OSD menu.
2. Press > or < key to select “Sound Setup” option
3. Press ^ or v key to select “Bass” option.
4. Press > or < key to adjust Bass data.
5. Press “MENU” to exit or press ^ or v key to adjust others.

**▪ Treble**

1. Press “MENU” key to open OSD menu.
2. Press > or < key to select “Sound Setup” option
3. Press ^ or v key to select “Treble” option.
4. Press > or < key to adjust Treble data.
5. Press “MENU” to exit or press ^ or v key to adjust others.

**▪ Balance**

1. Press “MENU” key to open OSD menu.
2. Press > or < key to select “Sound Setup” option
3. Press ^ or v key to adjust “Balance” option.
4. Press > or < key to adjust “Balance” data.
5. Press “MENU” to exit or press ^ or v key to adjust others.

▪ **Mute**

1. Press “MENU” key to open OSD menu.
2. Press > or < key to select “Sound Setup” option
3. Press ^ or v key to select “Mute” option.
4. Press > or < key to select ON/OFF.

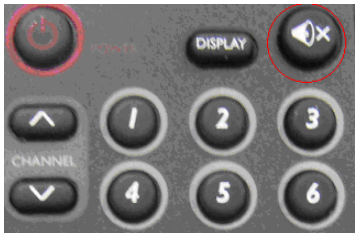


You can also press key on remote control to select mute,

after the selection you can adjust the volume or press to cancel the mute

5. Press “MENU” to exit or press ^ or v key to adjust others.

## PICTURE SET UP MENU

**1. Press “MENU” key to open OSD menu.**

**2. Press > or < key to select “ Pc Setup” option**

**3. Press ^ or v key to select submenu.**

***Note:*** Picture Setup menu can only be selected under the signal source of AV/TV/S-VIDEO.

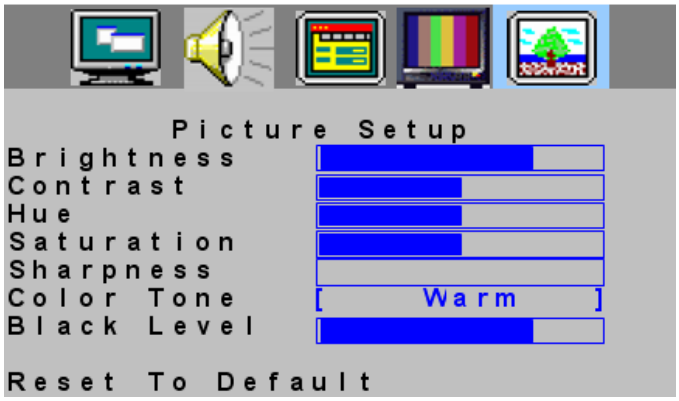


**▪ Brightness**

1. Press “MENU” key to open OSD menu.
2. Press > or < key to select “Picture Setup” option
3. Press ^ or v key to select “Brightness” option.
4. Press > or < key to adjust Brightness data.
5. Press “MENU” to exit or press ^ or v key to adjust others

**▪ Contrast**

1. Press “MENU” key to open OSD menu.
2. Press > or < key to select “ Picture Setup” option
3. Press ^ or v key to select “Contrast” option.
4. Press > or < key to adjust Contrast data.
5. Press “MENU” to exit or press ^ or v key to adjust others

**▪ Hue**

1. Press “MENU” key to open OSD menu.
2. Press > or < key to select “Picture Setup” option
3. Press ^ or v key to select “Hue” option.
4. Press > or < key to adjust Hue data.
5. Press “MENU” to exit or press key to adjust others.

**▪ Saturation**

1. Press “MENU” key to open OSD menu.
2. Press > or < key to select “Picture Setup” option
3. Press ^ or v key to select “Saturation” option.
4. Press > or < key to adjust Saturation data.
5. Press “MENU” to exit or press ^ or v key to adjust others.

**▪ Sharpness**

1. Press “MENU” key to open OSD menu.
2 Press > or < key to select “Picture Setup” option
3. Press ^ or v key to select “Sharpness” option.
4. Press > or < key to adjust sharpness data.
5. Press “MENU” to exit or Press key to adjust others.

**▪ Color Tone**

1. Press “MENU” key to open OSD menu.
2. Press > or < key to select “Picture Setup” option
3. Press ^ or v key to select “Color Tone” option.
4. Press > or < key to select warm or cool color
5. Press “MENU” to exit or press ^ or v key to adjust others.

**▪ Black Level**

1. Press “MENU” key to open OSD menu.
2 Press > or < key to select “Picture Setup” option
3. Press ^ or v key to select “Black Level” option.
4. Press > or < key to adjust Black level data.
5. Press “MENU” to exit or press ^ or v key to adjust others.

## PC SET UP MENU

**1. Press “MENU” key to open OSD menu.**

**2. Press > or < key to select “PC” option**

**3. Press ^ or v key to select submenu**

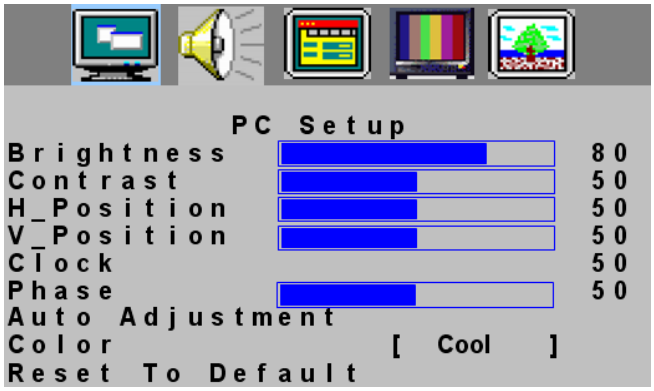


***Note:*** **PC Setup menu can only be selected under the PC signal source**

**▪ Brightness**

1. Press “MENU” key to open OSD menu.
2. Press > or < key to select “PC Setup” option
3. Press ^ or v key to select “Brightness” option.
4. Press > or < key to adjust Brightness data.
5. Press “MENU” to exit or press ^ or v key to adjust others.

**▪ Contrast**

1. Press “MENU” key to open OSD menu.
2. Press > or < key to select “PC Setup” option
3. Press ^ or v key to select “Contrast” option.
4. Press > or < key to adjust contrast data.
5. Press “MENU” to exit or press ^ or v key to adjust others.

**▪ H_Position**

1. Press “MENU” key to open OSD menu.
2. Press > or < key to select “PC Setup” option
3. Press ^ or v key to select “H_position” option.
4. Press > or < key to adjust H_Position data.
5. Press “MENU” to exit or press ^ or v key to adjust others.

**▪ V_Position**

1. Press “MENU” key to open OSD menu.
2. Press > or < key to select “PC Setup” option
3. Press ^ or v key to select “V_Position” option.
4. Press > or < key to adjust “V_Position” data
5. Press “MENU” to exit or press ^ or v key to adjust others.

▪ **Clock**

1. Press “MENU” key to open OSD menu.
2. Press > or < key to select “PC Setup” option
3. Press ^ or v key to select “Clock” option.
4. Press > or < key to adjust Clock data
5. Press “MENU” to exit or press^ or v key to adjust others.

▪ **Phase**

1. Press “MENU” key to open OSD menu.
2. Press > or < key to select “PC Setup” option
3. Press ^ or v key to select “Phase” option.
4. Press > or < key to adjust Phase data
5. Press “MENU” to exit or press ^ or v key to adjust others.

▪ **Auto Adjustment**

1. Press “MENU” key to open OSD menu.
2. Press > or < key to select “PC Setup” option
3. Press ^ or v key to select “Auto Adjustment” option.
4. Press > or < key to conduct Auto Adjustment, then PC will adjust automatically, if the adjustment is OK, it will exit OSD menu automatically

▪ **Color**

1. Press “MENU” key to open OSD menu.
2. Press > or < key to select “PC Setup” option
3. Press ^ or v key to select “Color” option.
4. Press > or < key to select Color

   If you choose Color as User, you can adjust R/G/B according to your need

   1) Press “MENU” key to enter User Color menu.
   2) Press ^ or v key to select Red/Green/Blue option.
   3) Press > or < key to adjust Red/Green/Blue data
   4) Press MENU TO exit to Color menu
   5) Press ^ or v key to select other adjustment items, then press MENU to exit

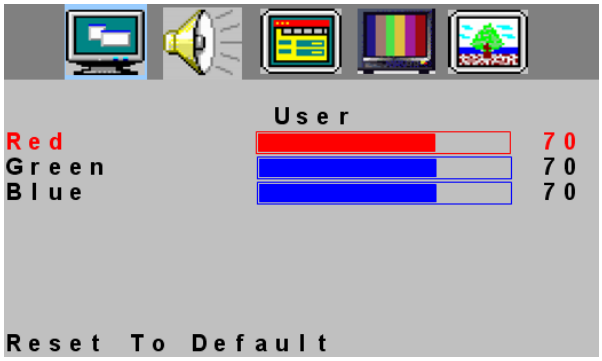

# General Information

## Tips

**Care of the screen**

Do not rub or strike the screen with anything hard as this may scratch, mar, or damage the screen permanently.
Unplug the screen before cleaning the screen. Dust the TV by wiping the screen and the cabinet with a soft, clean cloth. If the screen requires additional cleaning, use a clean, damp cloth. Do not use liquid cleaners or aerosol cleaners.

**Mobile telephone warning**

To avoid disturbances in picture and sound, malfunctioning of your TV or even damage to the TV, keep away your mobile telephone from the TV.

**End of life directives**

We are paying a lot of attention to produce environmentally friendly in green focal areas. Your new receiver contains materials which can be recycled and reused.
At the end of its life specialized companies can dismantle the discarded receiver to concentrate the reusable materials and to minimize the amount of materials to be disposed of.
Please ensure you dispose of your old receiver according to local regulations.

## Before Call Service

Please make these simple checks before calling service. These tips may save you time and money since charges for receiver installation and adjustments of customer controls are not covered under your warranty.

| Symptoms | Items to Check and Actions to follow |
|---|---|
| “Ghost ” or double image | *This may be caused by obstruction to the antenna due to high rise buildings or hills. Using a highly directional antenna may inprove the picture. |
| No power | *Check that the TV’s AC power cord is plugged into the mains socket.<br>*Unplug the TV, wait for 60 seconds. Then re-insert plug into the mains socket and turn on the TV again. |
| No picture | *Check antenna connections at the rear of the TV to see if it is properly connected to the TV.<br>*possible broadcast station trouble. Try another channel.<br>*Adjust the contrast and brightness settings.<br>*Check the Closed Captions control. Some TEXT modes could block the screen. |
| Good picture but no sound | *Check the cable connection<br>*Increase the VOLUME.<br>*Check that the TV is not muted; press the button on the remote control. |
| Good sound but poor color | *Adjust the contrast, color and brightness settings. |
| Poor picture | *Sometimes, poor picture quality occurs when having activated an S-VHS camera or camcorder connected and having connected another peripheral at the same time. In this case, please connect power cords of other peripherals to a different power outlet. |
| Snowy picture and noise | *Check the antenna connection |
| Horizontal dotted line | *This may be caused by electrical interference (e.g. hairdryer, nearby neon lights, etc.)<br>*Turn off the equipment. |
| Television not responding to remote control | *Check whether the batteries are working. Replace if necessary<br>*Clean the remote control sensor lens on the TV.<br>*Use the buttons at the front of your TV. |

## GLOSSARY

**Audio / Video Inputs**

Located on the rear and the front of the receiver these connectors (RCA photo type plug) are used for the input of audio and video signals. Designed for use with VCRs (or other accessories) in order to receive higher picture resolution and offer sound connection options.

**S-Video Input**

Allow directly connection of high-resolution video sources, such as a Super VHS videocassette recorder, Laser Disc player, etc. Provide improved picture resolution, sharpness, and clarity.

**Composite Input**

Allows direct connector of high-resolution video sources, such as DVD player, digital TV, etc, provides improved picture resolution, sharpness and clarity.

**Audio output**

Provide sound output, it can be connected external speaker, and enhance the sound quality.

**Menu**

An on-screen listing of feature control shows on the TV screen which is available for user adjustments.

**Multichannel Television sound (MTS)**

The broadcast standard that allow stereo sound to be transmitted with the TV picture.

**RF**

Radio Frequency or modulated signal design used as the carrier for television broadcasts.

**Second Audio Program (SAP)**

Another or additional audio channel provided for in the Multichannel Television Sound (MTS) broadcast standard. A monaural soundtrack included within the recorded or video signal (usually containing a second language translation for the displayed program).

**Sleep Timer**

The function which you can set a time period after the TV turns off.

## PRODUCT SPECIFICATION

### *15MF400T/37*

| Item | | Specification |
|---|---|---|
| LCD Panel | Screen Size | 15" |
| | Aspect Ratio | 4:3 |
| | Resolution | 1024x768 |
| | Brightness | 250cd/m² (typ.) |
| | Contrast Ratio | 400:1 |
| | Response Time | 16ms |
| | Viewing Angle | left/right = 60°/60°<br>Up/down = 40°/60° |
| | Display Colors | 16.7M |
| TV Function | TV Tuner | NTSC M |
| | Color System | NTSC |
| | Sound System | MTS + SAP |
| | Closed-Caption & V-chip | Yes |
| Video Input | Composite | x1 |
| | S-Video | x1 |
| | Closed-Caption & V-chip | Yes |
| | Color System | NTSC/PAL |
| PC Input | Signal | Analog |
| | Horizontal Frequency (kHz) | 31.5~60 |
| | Vertical Frequency (Hz) | 56~75 |
| | Plug & Play | DDC2B |
| | Max. Resolution | 1024x768 @ 75Hz |
| | Recommended Resolution | 1024x768 @ 60Hz |
| Audio Output | Built-in Speakers | 2x 2W (L/R) |
| | Headphone Output | Yes (3.5mmφ) |
| Power | Power Supply | +12V DC Input |
| | Adapter | 100-240V AC, 50/60Hz |
| | Power Consumption (Max.) | Power on 〈50W,<br>Off mode 〈2W |
| Video Feature | De-interlacer | 2D de-interlacer |
| | Comb Filter | Adaptive 4H Y/C Separation |
| Other Features | 3-2 Pull Down Recovery<br>Wall Mount | Yes<br>VESA 100mm x 100mm |
| | Multi-Function Remote | Yes |
| | Sleep Timer | Yes |
| | Tilt Angle (front/back) | 5°/15° |
| | OSD language | English/French(Canadian type)/Spanish |

| | | |
|---|---|---|
| **Dimension** | with Stand (mm) | 371.6mm x 346 mm x 147.5mm |
| | without Stand (mm) | 371.6mm x 324mm x 49.5mm |
| | Carton (mm) | 434(W) x 407(D) x 192(L) |
| **Weight** | Net, kg | 3.5kg |
| | Loose, including package | 5.5kg |
| **Accessory** | Remote controller, Batteriesx2, AC Power adapter, QSG, power cord<br>User manual<English/French(Canadian type)><br>(Including Limited Warranty <English only>), | |

# LIMITED WARRANTY

**LCD TV**
90 Days Free Labor
One Year Parts Exchange
This product must be carried in for service.

**WHO IS COVERED?**
You must have proof of purchase to receive warranty service. A sales receipt or other document showing that you purchased the product is considered proof of purchase.

**WHAT IS COVERED?**
Warranty coverage begins the day you buy your product. For 90 days thereafter, all parts will be repaired or replaced free, and labor is free. From 90 days to one year from the day of purchase, all parts will be repaired or replaced free, but you pay for all labor charges. After one year from the day of purchase, you pay for the replacement or repair of all parts, and for all labor charges.
All parts, including repaired and replaced parts, are covered only for the original warranty period. When the warranty on the product expires, the warranty on all replaced and repaired parts also expires.

**WHAT IS EXCLUDED?**
Your warranty does not cover:
• labor charges for installation or setup of the product, adjustment of customer controls on the product, and installation or repair of antenna systems outside of the product.
• product repair and/or part replacement because of misuse, accident, unauthorized repair or other cause not within the control of Magnavox.
• reception problems caused by signal conditions or cable or antenna systems outside the unit.
• a product that requires modification or adaptation to enable it to operate in any country other than the country for which it was designed, manufactured, approved and/or authorized, or repair of products damaged by these modifications.
• incidental or consequential damages resulting from the product. (Some states do not allow the exclusion of incidental or consequential damages, so the above exclusion may not apply to you. This includes, but is not limited to, prerecorded material, whether copyrighted or not copyrighted.)
• a product used for commercial or institutional purposes.

**WHERE IS SERVICE AVAILABLE?**
Warranty service is available in all countries where the product is officially distributed by Magnavox. In countries where Magnavox does not distribute the product, the local Magnavox service organization will attempt to provide service (although there may be a delay if the appropriate spare parts and technical manual(s) are not readily available).

**MAKE SURE YOU KEEP...**
Please keep your sales receipt or other document showing proof of purchase. Attach it to this owner's manual and keep both nearby. Also keep the original box and packing material in case you need to return your product.

**BEFORE REQUESTING SERVICE...**
Please check your owner's manual before requesting service. Adjustments of the controls discussed there may save you a service call.

**TO GET WARRANTY SERVICE IN U.S.A., PUERTO RICO, OR U.S. VIRGIN ISLANDS...**
Contact a Magnavox factory service center (see enclosed list) or authorized service center to arrange repair.
(In U.S.A., Puerto Rico, and U.S. Virgin Islands, all implied warranties, including implied warranties of merchantability and fitness for a particular purpose, are limited in duration to the duration of this express warranty. But, because some states do not allow limitations on how long an implied warranty may last, this limitation may not apply to you.)

**TO GET WARRANTY SERVICE IN CANADA...**
Please contact Magnavox at:
1-800-705-2000
(In Canada, this warranty is given in lieu of all other warranties. No other warranties are expressed or implied, including any implied warranties of merchantability or fitness for a particular purpose. Magnavox is not liable under any circumstances for any direct, indirect, special, incidental or consequential damages, howsoever incurred, even if notified of the possibility of such damages.)

**REMEMBER...**
Please record below the model and serial numbers found on the product. Also, please fill out and mail your warranty registration card promptly. It will be easier for us to notify you if necessary.
MODEL # _____
SERIAL # _____

*This warranty gives you specific legal rights. You may have other rights which vary from state/province to state/province.*

Magnavox, P.O. Box 671539 Marietta, Ga. 30006-0026