7705 SAR-Hm and 7705 SAR-Hmc | Release 22.10

SAR-Hm and SAR-Hmc Chassis Installation Guide

3HE 19133 AAAA TQZZA

Edition: 04

November 2023

© 2022-2023 Nokia. Nokia Confidential Information
Use subject to agreed restrictions on disclosure and use.

Nokia is committed to diversity and inclusion. We are continuously reviewing our customer documentation and consulting with standards bodies to ensure that terminology is inclusive and aligned with the industry. Our future customer documentation will be updated accordingly.

This document includes Nokia proprietary and confidential information, which may not be distributed or disclosed to any third parties without the prior written consent of Nokia.

This document is intended for use by Nokia's customers ("You"/"Your") in connection with a product purchased or licensed from any company within Nokia Group of Companies. Use this document as agreed. You agree to notify Nokia of any errors you may find in this document; however, should you elect to use this document for any purpose(s) for which it is not intended, You understand and warrant that any determinations You may make or actions You may take will be based upon Your independent judgment and analysis of the content of this document.

Nokia reserves the right to make changes to this document without notice. At all times, the controlling version is the one available on Nokia's site.

No part of this document may be modified.

NO WARRANTY OF ANY KIND, EITHER EXPRESS OR IMPLIED, INCLUDING BUT NOT LIMITED TO ANY WARRANTY OF AVAILABILITY, ACCURACY, RELIABILITY, TITLE, NON-INFRINGEMENT, MERCHANTABILITY OR FITNESS FOR A PARTICULAR PURPOSE, IS MADE IN RELATION TO THE CONTENT OF THIS DOCUMENT. IN NO EVENT WILL NOKIA BE LIABLE FOR ANY DAMAGES, INCLUDING BUT NOT LIMITED TO SPECIAL, DIRECT, INDIRECT, INCIDENTAL OR CONSEQUENTIAL OR ANY LOSSES, SUCH AS BUT NOT LIMITED TO LOSS OF PROFIT, REVENUE, BUSINESS INTERRUPTION, BUSINESS OPPORTUNITY OR DATA THAT MAY ARISE FROM THE USE OF THIS DOCUMENT OR THE INFORMATION IN IT, EVEN IN THE CASE OF ERRORS IN OR OMISSIONS FROM THIS DOCUMENT OR ITS CONTENT.

Copyright and trademark: Nokia is a registered trademark of Nokia Corporation. Other product names mentioned in this document may be trademarks of their respective owners.

© 2022-2023 Nokia.

© 2022-2023 Nokia. Nokia Confidential Information
Use subject to agreed restrictions on disclosure and use.

Table of Contents

1 Preface 19
1.1 About This Guide 19
1.1.1 List of Technical Publications 19
1.1.2 Warnings and Notes 19
1.1.3 Audience 19
1.1.4 Information Symbols 20
1.1.5 Technical Support 21
1.1.6 Nokia Canada Address 21

2 Mandatory Regulations 23
2.1 In This Chapter 23
2.2 List of Terms 24
2.3 Safety Warnings / Avertissements de Sécurité 26
2.3.1 Ground Connections / Raccordement à la Terre 28
2.3.2 LASER Transceiver / Émetteur-récepteur LASER 28
2.3.3 Lightning / Foudre 28
2.3.4 Physical Safety / Sécurité Physique 29
2.3.5 Electrical Safety / Sécurité Électrique 29
2.4 General Requirements 30
2.4.1 Anti-static Measures 30
2.4.1.1 ESD Grounding 31
2.4.2 Unit Repair 33
2.4.3 Equipment Interconnection Points 33
2.4.3.1 SELV and ES1 33
2.4.3.2 Primary and ES3 33
2.4.4 Prevention of Access 33
2.4.5 Environmental Requirements for Installation 34
2.4.6 Protective Safety Ground (Earth) 34
2.4.7 EMC Compliance 34
2.4.8 Regulatory Symbols 34
2.5 Safety Approvals 36
2.6 Safety Approval for External DC Sources That Power This Equipment 37
2.6.1 Low-Voltage DC Sources, Nominal 12/24/48 VDC 37
2.6.2 High-Voltage DC Sources, 88 to 300 VDC 37
2.7 Canada Regulations 38
2.7.1 Industry Canada Regulations 38
2.7.2 General Requirements for Compliance of Radio Apparatus (RSS-GEN) 38
2.7.3 EMC Compliance 41
2.7.4 RF Exposure 41
2.8 United States Regulations 42
2.8.1 Federal Communications Commission 42
2.8.1.1 EMC Regulations 42
2.8.1.2 RF Regulations 42

© 2022-2023 Nokia. Nokia Confidential Information
Use subject to agreed restrictions on disclosure and use.

2.8.2 FCC RF-Exposure Regulations 43
2.9 European Union Regulations....45
2.9.1 Declaration of Conformity 45
2.9.2 EU Compliance Statement 45
2.9.3 EMC/EMI Compliance 45
2.9.4 Radio Compliance 46
2.9.5 RF Exposure 46
2.9.6 Protective Earth 46
2.9.7 Eco-Environmental 46
2.9.8 Material Content Compliance 48
2.10 United Kingdom Regulations 49
2.10.1 Declaration of Conformity 49
2.10.1.1 EMC/EMI Compliance 49
2.10.1.2 Laser Interface....49
2.10.1.3 Protective Earth 50
2.10.1.4 Material Content Compliance 50
2.11 Australia/New Zealand Regulations 51
2.11.1 ACMA Regulations 51
2.12 China Regulations 52
2.12.1 Packaging Collection and Recovery Requirements 52
2.12.2 Material Content Compliance 52
2.12.3 Altitude Limit 52
2.13 South Korea Regulations....54
2.14 Japan Regulations....55
2.14.1 Safety 55
2.14.2 EMC....55
2.15 Hazardous Locations....57
2.15.1 Chassis Labels 57
2.15.2 Conditions of Use 57

3 7705 SAR-Hm and 7705 SAR-Hmc Overview 59
3.1 In This Chapter....59
3.2 Overview of the 7705 SAR-Hm and 7705 SAR-Hmc 60
3.2.1 7705 SAR-Hm and 7705 SAR-Hmc Components 63
3.2.1.1 Chassis Features....63
3.2.1.2 Ethernet Ports 64
3.2.1.3 RSVD Port....64
3.2.1.4 RS-232 Ports 64
3.2.1.5 Console Port....65
3.2.1.6 Alarms Port....65
3.2.1.7 Main and Diversity Antenna Connectors 66
3.2.1.8 GPS Antenna Connector 66
3.2.1.9 WLAN Connector....66
3.2.1.10 Chassis Grounding 66
3.2.1.11 Power Supply Input 67
3.2.1.12 High Voltage Power Supply Unit 67
3.2.1.13 Chassis Temperature Control....68
3.2.1.14 Chassis Mounting Options....68
3.3 Cellular Components 70

© 2022-2023 Nokia. Nokia Confidential Information
Use subject to agreed restrictions on disclosure and use.

3.3.1 Carrier Wireless Module Variants 70
3.3.2 SIMs 71
3.3.3 Commercial Cellular Antennas 72
3.3.3.1 Outdoor 2G/3G/4G Omni-directional Antenna 72
3.3.3.2 Outdoor 2G/3G/4G Directional Antenna 73
3.3.3.3 Indoor LTE Omni-directional Antenna 73
3.3.3.4 LTE Surge Protectors 73
3.4 GNSS Components 75
3.5 WLAN Components 76
3.5.1 Outdoor WiFi Antennas 76
3.5.2 Indoor WiFi Antenna 76
3.6 Citizens Broadband Radio Service 77
3.7 ADP-Hm Prerequisites and Pre-staging Considerations 78
3.8 Chassis Installation Process 79
3.8.1 Preparation 79
3.8.2 Pre-staging 79
3.8.3 On-site Installation 80

4 Site Preparation 81
4.1 In This Chapter 81
4.2 Warnings and Notes 82
4.3 7705 SAR-Hm and 7705 SAR-Hmc System Specifications 84
4.3.1 Physical Specifications 84
4.3.2 Environmental Specifications 85
4.3.3 Radio Specifications 86
4.3.4 Chassis Power Consumption 88
4.3.5 CBN and IBN Grounding Requirements 88
4.3.6 Storage 89
4.3.7 Compliance 89
4.3.8 SIM Specifications 89
4.4 HV-PS35 Specifications 90
4.4.1 Physical Specifications 90
4.4.2 Environmental Specifications 90
4.4.3 HV-PS35 Power Consumption 91
4.4.4 Power and Cabling Requirements 92
4.4.4.1 High-Voltage DC Power Requirements 92
4.4.4.2 AC Power Requirements 92
4.4.5 HV-PS35 Clearance Requirements 92
4.4.6 Storage 93
4.4.7 Compliance 93
4.5 Installation Locations 94
4.5.1 Chassis Clearance and Thermal Requirements 95
4.6 Cellular Radio Specifications 97
4.7 Commercial Antenna Specifications 102
4.7.1 Cellular Antenna Specifications 102
4.7.1.1 Outdoor 2G/3G/LTE Omni-directional Antenna Specifications 102
4.7.1.2 Outdoor 2G/3G/LTE Directional Antenna Specifications 104
4.7.1.3 Indoor LTE Omni-directional Antenna Specifications 105
4.7.1.4 Generic Outdoor Cellular Antenna Requirements 106

© 2022-2023 Nokia. Nokia Confidential Information
Use subject to agreed restrictions on disclosure and use.

4.7.2 WiFi Omni-directional and Directional Antenna Specifications 106
4.7.2.1 Outdoor WiFi Omni-directional Antenna Specifications.....107
4.7.2.2 Outdoor WiFi Directional Antenna Specifications.....109
4.7.2.3 Vehicle Mount LTE/WiFi/GNSS Antenna Specifications 110
4.7.2.4 Indoor WiFi Omni-directional Antenna Specifications 113
4.7.2.5 Generic WiFi Antenna Requirements.....114
4.7.3 GPS/GNSS Antenna Requirements.....114
4.8 Generic Requirements for Enclosures.....115

5 Installing and Grounding the Chassis 117
5.1 In This Chapter.....117
5.2 Unpacking the Chassis.....118
5.3 Installing the SIM.....120
5.4 Installation Preparation and Precautions.....122
5.5 Installing the Chassis on a DIN Rail 123
5.5.1 DIN Rail-mounting the Chassis 124
5.6 Mounting the Chassis in a Rack.....126
5.7 Mounting the Chassis on a Flat Surface 127
5.8 7705 SAR-Hmc Direct Mounting 130
5.9 Grounding the Chassis 131
5.9.1 Making the Ground Connection.....132

6 Making Indoor Antenna Connections to the 7705 SAR-Hm 135
6.1 In This Chapter.....135
6.2 Overview 136
6.3 Direct-mounting the Indoor LTE Omni-directional Antenna.....137
6.4 Direct Mounting an Indoor WiFi Antenna 138
6.5 Optimal Positions for Indoor Antennas 139

7 7705 Outdoor Enclosure 141
7.1 In This Chapter.....141
7.2 7705 Outdoor Enclosure Features 142
7.2.1 7705 Outdoor Enclosure Connectors and Variant Types.....144
7.2.2 Interior Features 146
7.2.2.1 Alarm Switch.....147
7.3 7705 Outdoor Enclosure Requirements for Hazardous Locations 148
7.3.1 Schedule of Limitations 148
7.3.1.1 7705 Outdoor Enclosure Markings.....149
7.3.1.2 7705 Outdoor Enclosure Compliance Standards 149
7.4 7705 Outdoor Enclosure Mounting Hardware 151
7.5 Installing the Chassis in a 7705 Outdoor Enclosure.....152
7.5.1 Installing the 7705 SAR-Hm Chassis in a 7705 Outdoor Enclosure.....154
7.5.2 Installing the 7705 SAR-Hmc Chassis in a 7705 Outdoor Enclosure.....161
7.6 Installing the 7705 Outdoor Enclosure on a Pole or Wall 165

© 2022-2023 Nokia. Nokia Confidential Information
Use subject to agreed restrictions on disclosure and use.

8 Installing and Grounding Outdoor Antennas 173
8.1 In This Chapter 173
8.2 Warnings and Notes 174
8.3 Installing and Grounding Outdoor Cellular Antennas 177
8.3.1 Outdoor Commercial Antennas 177
8.3.1.1 Outdoor 2G/3G/4G Omni-directional Antenna Installation Overview 177
8.3.1.2 Outdoor 2G/3G/4G Directional Antenna Installation Overview 178
8.3.2 LTE Indoor/Outdoor Application 179
8.3.3 LTE Outdoor Enclosure Application 180
8.3.4 LTE Antenna Installation Accessory Kits 181
8.4 Installing and Grounding the Outdoor GPS/GLONASS Antenna 183
8.5 Installing and Grounding WLAN Outdoor Antennas 184
8.5.1 WLAN Indoor/Outdoor and Outdoor Applications 188
8.6 Grounding Outdoor Antennas 189
8.6.1 Antenna Coaxial Cable Shield Grounding 189

9 Making Outdoor Antenna and Cable Connections 193
9.1 In This Chapter 193
9.2 Connecting Outdoor Cellular Antennas to the Main and Diversity Connectors 194
9.2.1 Attaching LDF4 Coaxial Cables to an Outdoor Cellular Antenna 194
9.2.2 Attaching a Connector to an LDF4 Coaxial Cable 197
9.2.3 Installing Surge Protectors (Enclosure Application) 203
9.2.4 Completing the Indoor Cabling (Indoor/Outdoor Application) 204
9.2.5 Attaching an LDF4 Coaxial Ground Kit to an LDF4 Coaxial Cable 205
9.3 Connecting the Outdoor WiFi Antenna to the 7705 SAR-Hm WLAN Connector 211
9.4 RF Power Budget Calculations 212

10 Making Connections to the RJ-45 Ports 215
10.1 In This Chapter 215
10.2 Connecting Cables to RJ-45 Ports 216
10.2.1 Making Shield Ground Connections 218
10.2.2 Making Cable Connections 218
10.2.3 Making External Alarm Connections 219
10.2.4 Routing Cables 219
10.3 Cabling Considerations for 7705 Outdoor Enclosure Applications 220

11 Preparing the DC Power Connections 221
11.1 In This Chapter 221
11.2 Warnings and Notes 221
11.3 Wiring and Connecting DC Power 223
11.3.1 Preparing the DC Input Wires 223
11.3.2 Removing and Reinstalling the DC Power Input Terminal Block 224
11.3.3 Making –12/24 VDC and –12/24/48 VDC Connections 226
11.3.4 Making +12/24 VDC and +12/24/48 VDC Connections 230

© 2022-2023 Nokia. Nokia Confidential Information
Use subject to agreed restrictions on disclosure and use.

12 High Voltage Power Supply Unit 233
12.1 In This Chapter 233
12.2 Warnings and Notes 234
12.3 Overview 235
12.4 Unpacking the HV-PS35 236
12.5 DIN Rail-mounting the HV-PS35 237
12.6 Mounting the HV-PS35 on a Flat Surface 238
12.7 7705 Outdoor Enclosure Installation 239
12.8 HV-PS35 Ground Wiring 242
12.8.1 Making the Ground Connection 243
12.9 HV-PS35 Power Supply Connections 246
12.9.1 Removing and Reinstalling HV-PS35 Power Terminal Blocks 248
12.10 Connecting the HV-PS35 to the 7705 SAR-Hm or 7705 SAR-Hmc 250
12.11 Connecting the HV-PS35 to a Power Source 252
12.11.1 Connecting the HV-PS35 to a DC Power Source 252
12.11.2 Connecting the HV-PS35 to an AC Power Source 253

13 Powering Up and Initializing 255
13.1 In This Chapter 255
13.2 Overview and Prerequisites 256
13.3 Powering Up the Chassis 257
13.3.1 Power-up and Initialization 257
13.4 Establishing a Console Connection 259
13.5 Troubleshooting Initial Startup 260
13.6 Provisioning the 7705 SAR-Hm and 7705 SAR-Hmc 261

14 7705 SAR-Hm and 7705 SAR-Hmc LEDs 263
14.1 In This Chapter 263
14.2 7705 SAR-Hm and 7705 SAR-Hmc Faceplate LEDs 264
14.3 7705 SAR-Hm and 7705 SAR-Hmc RJ-45 Connector LEDs 269

15 Pinout Assignments 273
15.1 In This Chapter 273
15.2 Console Port Pinout Assignments 274
15.2.1 Console Port Pinouts 274
15.3 Alarms Port Pinout Assignments 275
15.3.1 External Alarms Port Pinouts 276
15.3.2 Alarm Examples 277
15.4 Ethernet Ports Pinout Assignments 278
15.4.1 Ethernet Port Pinouts 278
15.5 RS-232 Ports Pinout Assignments 279
15.5.1 RS-232 Port Pinouts 279

16 Standards and Protocol Support 283
16.1 Safety 284
16.2 Electromagnetic Compatibility 285
16.3 Environmental 287
16.4 Railway 288

© 2022-2023 Nokia. Nokia Confidential Information
Use subject to agreed restrictions on disclosure and use.

16.5 Power Utility Substations 289
16.6 Radio 290
16.7 Directives, Regional Approvals, and Certifications 291
16.8 Telecom Interoperability 292

17 Appendix - 7705 SAR-Hmc Direct Mount Template 293

© 2022-2023 Nokia. Nokia Confidential Information
Use subject to agreed restrictions on disclosure and use.

© 2022-2023 Nokia. Nokia Confidential Information
Use subject to agreed restrictions on disclosure and use.

List of Tables

1 Preface 19
Table 1 Information Symbols 20

2 Mandatory Regulations 23
Table 2 List of Terms 24
Table 3 Regulatory Symbols 35
Table 4 WiFi Antenna Gain Limits 39
Table 5 LTE Antenna Gain Limits 40
Table 6 Indoor WLAN Antenna Gain Limits 43
Table 7 LTE Antenna Gain Limits 44

3 7705 SAR-Hm and 7705 SAR-Hmc Overview 59
Table 8 7705 SAR-Hm Chassis Variants by Carrier Wireless Module 61
Table 9 7705 SAR-Hmc Chassis Variants 62
Table 10 7705 SAR-Hm Carrier Wireless Module Variants 70
Table 11 7705 SAR-Hmc Carrier Wireless Module Variants 71
Table 12 Carrier Wireless Commercial Antenna Options 72
Table 13 Carrier Wireless Module Variants and Supported GNSS Systems and Frequencies 75

4 Site Preparation 81
Table 14 7705 SAR-Hm and 7705 SAR-Hmc Chassis Specifications 84
Table 15 7705 SAR-Hm and 7705 SAR-Hmc Chassis Environmental Specifications 85
Table 16 7705 SAR-Hm and 7705 SAR-Hmc LTE Port Specifications 86
Table 17 7705 SAR-Hm and 7705 SAR-Hmc WiFi Port Specifications 86
Table 18 7705 SAR-Hm and 7705 SAR-Hmc GNSS Port Specifications 87
Table 19 7705 SAR-Hm Chassis Power Consumption 88
Table 20 7705 SAR-Hmc Chassis Power Consumption 88
Table 21 7705 SAR-Hm Heat Dissipation 88
Table 22 7705 SAR-Hmc Heat Dissipation 88
Table 23 Chassis Storage Specifications 89
Table 24 2FF Industrial Mini SIM Specifications 89
Table 25 HV-PS35 Physical Specifications 90
Table 26 HV-PS35 Environmental Specifications 90
Table 27 HV-PS35 Power Consumption 91
Table 28 HV-PS35 Storage Specifications 93
Table 29 7705 SAR-Hm Cellular Radio Specifications 97
Table 30 7705 SAR-Hmc Cellular Radio Specifications 100
Table 31 Specifications for the Outdoor 2G/3G/LTE Omni-directional Antenna 103
Table 32 Specifications for the Outdoor 2G/3G/LTE Directional Antenna 104
Table 33 Specifications for the Indoor LTE Omni-directional Antenna 105
Table 34 Requirements for Generic Outdoor 3G and 4G Antennas 106
Table 35 Specifications for the Outdoor WiFi Omni-directional Antennas 107

© 2022-2023 Nokia. Nokia Confidential Information
Use subject to agreed restrictions on disclosure and use.

Table 36 Specifications for the Outdoor WiFi Directional Antennas 110
Table 37 Specifications for Vehicle Mount LTE/WiFi/GNSS Antennas 111
Table 38 Indoor WiFi Omni-directional Antenna Specifications 113
Table 39 Requirements for Generic WiFi Antennas 114

5 Installing and Grounding the Chassis 117
Table 40 Ground Wire Descriptions 132
Table 41 Ground Connection Components 134

7 7705 Outdoor Enclosure 141
Table 42 7705 Outdoor Enclosure Variants 144
Table 43 Compliance Standards 149

8 Installing and Grounding Outdoor Antennas.....173
Table 44 LTE Antenna Installation Accessory Kits 182
Table 45 Indoor/Outdoor Coaxial Shield Grounding and Surge Protection 191

9 Making Outdoor Antenna and Cable Connections.....193
Table 46 LTE Losses for Power Budget Commercial Band Calculations for Indoor/Outdoor Installations 212
Table 47 LTE Losses for Power Budget Commercial Band Calculations for Outdoor Installations 212
Table 48 WiFi Losses for Power Budget Commercial Band Calculations for Indoor/Outdoor Installations 213
Table 49 WiFi Losses for Power Budget Commercial Band Calculations for Outdoor Installations 213

11 Preparing the DC Power Connections.....221
Table 50 DC Power Cable Descriptions 223
Table 51 7705 SAR-Hm and 7705 SAR-Hmc DC Power Input Terminal Block Description 225
Table 52 Wiring the DC Power Supplies Description 228
Table 53 Wiring the DC Power Supplies Description 231

12 High Voltage Power Supply Unit.....233
Table 54 Ground Wire Descriptions 243
Table 55 Ground Connection Components 244
Table 56 Wiring the HV-PS35 to the 7705 SAR-Hm or 7705 SAR-Hmc.....247
Table 57 HV-PS35 Power Terminal Block 248

13 Powering Up and Initializing.....255
Table 58 Console Port Default Settings 259

14 7705 SAR-Hm and 7705 SAR-Hmc LEDs 263
Table 59 7705 SAR-Hm Faceplate LED Descriptions 265
Table 60 7705 SAR-Hmc Faceplate LED Descriptions 267
Table 61 7705 SAR-Hm and 7705 SAR-Hmc RSSI LEDs 268
Table 62 7705 SAR-Hm RJ-45 Connector LED Descriptions 269

© 2022-2023 Nokia. Nokia Confidential Information
Use subject to agreed restrictions on disclosure and use.

Table 63 7705 SAR-Hmc RJ-45 Connector LED Descriptions 271

15 Pinout Assignments 273
Table 64 Console Port Pinouts—RJ-45 274
Table 65 External Alarms Port Pinouts—RJ-45 Female 276
Table 66 Alarm Events 277
Table 67 Ethernet Port Pinouts—RJ-45 Female 278
Table 68 7705 SAR-Hm RS-232 Port Pinouts—RJ-45 Female 280
Table 69 7705 SAR-Hmc RJ-45 Port Pinouts 280
Table 70 Pinouts on the 7705 SAR-Hmc RS-232 Y-Cable Female Port 1 End 280
Table 71 Pinouts on the 7705 SAR-Hmc RS-232 Y-Cable Female Port 2 End 281
Table 72 Pinouts on a 7705 SAR-Hmc Single-Port Cable— RJ-45 Female 281

16 Standards and Protocol Support 283
Table 73 Safety Standards Compliance 284
Table 74 Electromagnetic Compatibility 285
Table 75 Environmental Standards Compliance 287
Table 76 Railway Compliance 288
Table 77 Power Utility Substations Compliance 289
Table 78 Radio Compliance 290
Table 79 Directives, Regional Approvals, and Certifications Compliance 291
Table 80 Telecom Interoperability 292

© 2022-2023 Nokia. Nokia Confidential Information
Use subject to agreed restrictions on disclosure and use.

© 2022-2023 Nokia. Nokia Confidential Information
Use subject to agreed restrictions on disclosure and use.

List of Figures

2 Mandatory Regulations 23
Figure 1 ESD Awareness Label....30
Figure 2 Ground Point on the Front of the 7705 SAR-Hm Chassis....32
Figure 3 Ground Point on the Front of the 7705 SAR-Hmc Chassis....32
Figure 4 WEEE Symbol for post-August 13, 2005 Product....47
Figure 5 Altitude Limit Symbol....53

3 7705 SAR-Hm and 7705 SAR-Hmc Overview 59
Figure 6 7705 SAR-Hm Chassis....60
Figure 7 7705 SAR-Hmc Chassis....61
Figure 8 7705 SAR-Hm Chassis Front and Back Features....63
Figure 9 7705 SAR-Hmc Chassis Front and Back Features....64
Figure 10 35W High Voltage Power Supply 67

5 Installing and Grounding the Chassis 117
Figure 11 Unpacking the Chassis....119
Figure 12 SIM Slots and Orientation on a 7705 SAR-Hm 121
Figure 13 SIM Slots and Orientation on a 7705 SAR-Hmc....121
Figure 14 DIN Rail Profile View 123
Figure 15 7705 SAR-Hm Chassis Rear-mounted on a Horizontal DIN Rail....123
Figure 16 7705 SAR-Hmc Chassis Rear-mounted on a Horizontal DIN Rail 124
Figure 17 DIN Rail Clip Oriented for a Horizontal DIN-rail Installation 124
Figure 18 Mounting the Chassis on a Horizontal DIN Rail 125
Figure 19 DIN Rail-to-rack Adapter 126
Figure 20 Rubber Feet Location on the 7705 SAR-Hm....128
Figure 21 Setting the 7705 SAR-Hm on a Flat Surface....128
Figure 22 Preparing the Ground Wire....132
Figure 23 Attaching a Ground Connector on a 7705 SAR-Hm....133
Figure 24 Attaching a Ground Connector on a 7705 SAR-Hmc....133

6 Making Indoor Antenna Connections to the 7705 SAR-Hm 135
Figure 25 Indoor LTE Omni-directional Antenna 137
Figure 26 WiFi Indoor Antenna....138
Figure 27 Indoor Antennas with Vertical Chassis....139
Figure 28 Indoor Antennas with Horizontal Chassis....140

7 7705 Outdoor Enclosure 141
Figure 29 7705 Outdoor Enclosure Front and Back 143
Figure 30 7705 Outdoor Enclosure Dimensions....143
Figure 31 Top and Bottom Cabling Ports 145
Figure 32 Interior Features 146
Figure 33 Alarm Switch Labels....147

© 2022-2023 Nokia. Nokia Confidential Information
Use subject to agreed restrictions on disclosure and use.

Figure 34 Applying Thermal Gel on the Heatsink for a 7705 SAR-Hm Installation 153
Figure 35 Loosening the Captive Bolts 154
Figure 36 Removing the Interior Heatsink Screws 155
Figure 37 Removing the Rear Heatsink Screw 155
Figure 38 Mating the Heatsink to the Chassis 156
Figure 39 Re-installing the Heatsink With the Chassis Back in the Enclosure 157
Figure 40 Connecting the LTE RF Cables on a 7705 SAR-Hm 158
Figure 41 Connecting the WiFi and GNSS Cables on a 7705 SAR-Hm 159
Figure 42 Re-installing the Rear Heatsink Screw 159
Figure 43 Re-Installing the Cover Bolts 160
Figure 44 Mounting Points on the Enclosure 161
Figure 45 Mating the Heatsink to the 7705 SAR-Hmc Chassis 162
Figure 46 Connecting the LTE RF Cables on a 7705 SAR-Hmc 163
Figure 47 Re-Installing the Cover Bolts 164
Figure 48 Fastening the Mounting Bracket To the Enclosure 166
Figure 49 Attaching the Banding Straps to the Bracket 167
Figure 50 Securing the Enclosure To the Pole 168
Figure 51 Installing the Enclosure On a Brick Wall 169
Figure 52 Performing the Grounding on a 7705 SAR-Hm 170
Figure 53 Performing the Grounding on a 7705 SAR-Hmc 171

8 Installing and Grounding Outdoor Antennas 173
Figure 54 Lightning Protection Area for Ground Installation 175
Figure 55 Lightning Protection Area for Tower Installation 175
Figure 56 Outdoor 2G/3G/4G Omni-directional Antenna 178
Figure 57 Outdoor 2G/3G/4G Directional Antenna 179
Figure 58 LTE Antenna Indoor/Outdoor Application 180
Figure 59 LTE Outdoor Enclosure Application 181
Figure 60 3HE12346AA Outdoor WiFi Omni-directional Antenna 184
Figure 61 3HE12346AB/AC/AD Outdoor WiFi Omni-directional Antennas 185
Figure 62 3HE12346AB/AC/AD Outdoor WiFi Omni-directional Antennas with a Mast Mount Bracket 185
Figure 63 3HE12424AA Outdoor WiFi Directional Antenna 186
Figure 64 3HE12424AA Outdoor WiFi Directional Antenna with a Mast Mount Bracket 187
Figure 65 Vehicle Mount Outdoor LTE/WiFi/GNSS Antenna 188
Figure 66 Outdoor Coaxial Shield Grounding and Surge Protection Installation 190
Figure 67 Indoor/Outdoor Coaxial Shield Grounding and Surge Protection 191

9 Making Outdoor Antenna and Cable Connections 193
Figure 68 Attaching the Coaxial Cables 195
Figure 69 Coaxial Cable and Connector Kits 198
Figure 70 LDF4 Cable Strip Tool Components 198
Figure 71 Removing the Cable Jacket With A Knife 199
Figure 72 Inserting the Cable Into the LDF4 Cable Strip Tool 199
Figure 73 Rotating the LDF4 Cable Strip Tool Around the Cable 200
Figure 74 Opening the Housing and Removing the Cable 200

© 2022-2023 Nokia. Nokia Confidential Information
Use subject to agreed restrictions on disclosure and use.

Figure 75 Flaring the Outer Conductor 201
Figure 76 Chamfering the Cable End 201
Figure 77 Flared Cable End Diameter 201
Figure 78 Attaching the O-ring and Connectors (Showing 4.3-10) 202
Figure 79 Installing a Surge Protector on the Enclosure 203
Figure 80 Indoor Cabling and Equipment 204
Figure 81 Cutting and Stripping the LDF4 Cable Jacket 206
Figure 82 Applying the PVC Tape to the Grounding Clamp Cable 207
Figure 83 Pushing the PVC Tape Upward on the Grounding Clamp Cable 207
Figure 84 Installing the Grounding Clamp to the Cable 208
Figure 85 Applying the Weatherproofing Tape Over the Grounding Clamp and Cable 208
Figure 86 Applying the PVC Tape Over the Weatherproofing Tape and Cable 209
Figure 87 LDF4 Coaxial Cable With the Top Portion of the Ground Lead Wire Waterproofed and Sealed With Tape 209
Figure 88 Inserting the Two-Hole Lug at the End of the Lead Wire 210
Figure 89 Placing the Heat Shrink Tube Over the Two-Hole Lug 210

10 Making Connections to the RJ-45 Ports 215
Figure 90 RJ-45 Ports on the 7705 SAR-Hm 217
Figure 91 RJ-45 Ports on the 7705 SAR-Hmc 217

11 Preparing the DC Power Connections 221
Figure 92 DC Power Cable 223
Figure 93 Removing and Reinstalling the 7705 SAR-Hm DC Power Input Terminal Block 224
Figure 94 Removing and Reinstalling the 7705 SAR-Hmc DC Power Input Terminal Block 225
Figure 95 Power Inputs for –12/24 VDC Installation on a 7705 SAR-Hm 227
Figure 96 Power Inputs for –12/24/48 VDC Installation on a 7705 SAR-Hmc 228
Figure 97 Power Inputs for +12/24 VDC Installation on a 7705 SAR-Hm 230
Figure 98 Power Inputs for +12/24/48 VDC Installation on a 7705 SAR-Hmc 231

12 High Voltage Power Supply Unit 233
Figure 99 HV-PS35 Features 235
Figure 100 Attaching the HV-PS35 Mounting Bracket to the Chassis 240
Figure 101 HV-PS35 Attached to the Mounting Bracket on a 7705 SAR-Hm 240
Figure 102 The HV-PS35 Attached to the Mounting Bracket on the 7705 SAR-Hmc 241
Figure 103 Preparing the Ground Wire 243
Figure 104 Attaching a Ground Connector to the HV-PS35 244
Figure 105 Wiring the HV-PS35 to the 7705 SAR-Hm 246
Figure 106 Wiring the HV-PS35 to the 7705 SAR-Hmc 247
Figure 107 Removing and Reinstalling the HV-PS35 Power Terminal Blocks 248

13 Powering Up and Initializing 255
Figure 108 Files on the Integrated Flash Memory Device 260

© 2022-2023 Nokia. Nokia Confidential Information
Use subject to agreed restrictions on disclosure and use.

14 7705 SAR-Hm and 7705 SAR-Hmc LEDs 263
Figure 109 7705 SAR-Hm Faceplate LEDs 264
Figure 110 7705 SAR-Hmc Faceplate LEDs 266
Figure 111 7705 SAR-Hm RJ-45 Connector LEDs 269
Figure 112 7705 SAR-Hmc RJ-45 Connector LEDs.....270

15 Pinout Assignments 273
Figure 113 Console Port Pin Numbers 274
Figure 114 Alarms Port Pin Numbers 276
Figure 115 Ethernet Port RJ-45 Connector Pin Numbers 278
Figure 116 RS-232 RJ-45 Connector Pin Numbers 279

© 2022-2023 Nokia. Nokia Confidential Information
Use subject to agreed restrictions on disclosure and use.

1 Preface

1.1 About This Guide

This guide provides an overview of the 7705 SAR-Hm and 7705 SAR-Hmc chassis, recommendations for preparing the site, procedures for installing, grounding, and powering the chassis, and prerequisites and instructions for initializing and commissioning the system.

After the hardware installation process is completed, refer to the List of Technical Publications for information about how to configure and manage the 7705 SAR-Hm and 7705 SAR-Hmc.

1.1.1 List of Technical Publications

For information about the 7705 SAR-Hm and 7705 SAR-Hmc software features, refer to the following software guides:

- 7705 SAR-Hm and 7705 SAR-Hmc Main Configuration Guide
- 7705 SAR-Hm and 7705 SAR-Hmc Interface Configuration Guide

1.1.2 Warnings and Notes

Observe the warnings and notes in this guide to avoid injury or equipment damage during installation and maintenance. Follow standard safety procedures and guidelines when working with and near electrical equipment. Warning statements and notes are provided in each chapter.

1.1.3 Audience

This guide is intended for network installers and system administrators who are responsible for installing, configuring, or maintaining networks. This guide assumes you are familiar with electronic and networking equipment.

© 2022-2023 Nokia. Nokia Confidential Information
Use subject to agreed restrictions on disclosure and use.

1.1.4 Information Symbols

Table 1 describes symbols contained in this guide.

Table 1 **Information Symbols**

Symbol	Meaning	Description
	Danger	This symbol warns that improper handling and installation could result in bodily injury. An electric shock hazard could exist. Before you begin work on this equipment, be aware of hazards involving electrical circuitry, be familiar with networking environments, and perform accident prevention procedures.
	Warning	This symbol warns that improper handling and installation could result in equipment damage or loss of data.
	Caution	This symbol warns that improper handling may reduce your component or system performance.
	Note	This symbol provides additional operational information.

© 2022-2023 Nokia. Nokia Confidential Information
Use subject to agreed restrictions on disclosure and use.

1.1.5 Technical Support

If you purchased a service agreement for your router and related products from a distributor or authorized reseller, contact the technical support staff for that distributor or reseller for assistance. If you purchased a Nokia service agreement, follow this link to contact a Nokia support representative and to access product manuals and documentation updates:

Product Support Portal

1.1.6 Nokia Canada Address

Nokia Canada Inc.
600 March Road
K2K 2T6
Ottawa, Canada

© 2022-2023 Nokia. Nokia Confidential Information
Use subject to agreed restrictions on disclosure and use.

© 2022-2023 Nokia. Nokia Confidential Information
Use subject to agreed restrictions on disclosure and use.

2 Mandatory Regulations

2.1 In This Chapter

The following sections describe the mandatory regulations that govern the installation and operation of the 7705 SAR-Hm and 7705 SAR-Hmc:

- List of Terms
- Safety Warnings / Avertissements de Sécurité
- General Requirements
- Safety Approvals
- Safety Approval for External DC Sources That Power This Equipment
- Canada Regulations
- United States Regulations
- European Union Regulations
- United Kingdom Regulations
- Australia/New Zealand Regulations
- China Regulations
- South Korea Regulations
- Japan Regulations
- Hazardous Locations

© 2022-2023 Nokia. Nokia Confidential Information
Use subject to agreed restrictions on disclosure and use.

2.2 List of Terms

Table 2 lists the mandatory regulations terms used in this guide.

Table 2 **List of Terms**

Term	Expansion
ACMA	Australian Communications and Media Authority
ACTA	Administrative Council for Terminal Attachments
ANSI	American National Standards Institute
AS/NZ	Australian/New Zealand standard
ATEX	ATmosphères EXplosives
CBN	Common Bonding Network
CE	Conformité Européene
CFR	Code of Federal Regulations
CSA International	Canadian Standards Association International
DC-C	Common DC Return
DC-I	Isolated DC Return
EEC	European Economic Community
EMC	Electromagnetic Compatibility
EMI	Electromagnetic Interference
EN	European Standards
ES1	Class 1 energy source
ES2	Class 2 energy source
ES3	Class 3 energy source
ETSI	European Telecommunications Standards Institute
FCC	Federal Communications Commission
IBN	Isolated Bonding Network
ICES	Interference Causing Equipment Standard
IEC	International Electrotechnical Commission
IET	Institution of Engineering and Technology (UK)

© 2022-2023 Nokia. Nokia Confidential Information
Use subject to agreed restrictions on disclosure and use.

Table 2 **List of Terms (Continued)**

Term	Expansion
LVD	Low Voltage Directive
NRTL	Nationally Recognized Testing Laboratory
OSHA (USA)	Occupational Safety and Health Administration (USA)
PCS	Personal Communications Service
PTCRB	PCS Type Certification Review Board
RoHS	Restriction of the use of certain Hazardous Substances
SELV	Safety Extra Low Voltage
TNV-1	Telecommunications Network Voltage, class 1
TNV-2	Telecommunications Network Voltage, class 2
TNV-3	Telecommunications Network Voltage, class 3
UL	Underwriters Laboratories
WEEE	Waste Electrical and Electronic Equipment

© 2022-2023 Nokia. Nokia Confidential Information
Use subject to agreed restrictions on disclosure and use.

2.3 Safety Warnings / Avertissements de Sécurité

Ensure that you read and observe all of the dangers and warnings described in this section.

Veuillez lire la description des risques et les avertissements mentionnés dans le présent chapitre.

Installation sections throughout the document have links to this section as applicable.

Les chapitres relatifs à l'installation de tout le document comportent des liens vers le présent chapitre, le cas échéant.

- Installation and servicing of the system must be done only by trained service personnel familiar with potential electrical, mechanical, and LASER radiation hazards.

  Seul un personnel formé qui connaît les risques électriques ou mécaniques ainsi que les dangers des rayons laser doit effectuer l'installation et l'entretien du système.
- Ensure that nearby equipment, including breaker panel bus bars and power connectors, is made safe. Either shut off the power, if possible, or install safety guards or mats over exposed power points and cables.

  Vérifiez que les équipements à proximité, comme les barres omnibus, le panneau à disjoncteurs et les connecteurs électriques, sont sécurisés. Coupez l'alimentation si possible ou installez des protections ou des tapis de sécurité sur les points d'alimentation et les câbles exposés.
- Do not power up equipment before verifying that all common equipment (chassis, power, cooling, and grounding) is connected correctly.

  Ne mettez pas l'équipement sous tension avant d'avoir vérifié que tous les équipements communs (châssis, alimentation, refroidissement et mise à la terre) sont correctement raccordés.
- The equipment must be provided with a readily accessible disconnect device as part of site preparation.

  L'équipement doit être équipé d'un dispositif de déconnexion facilement accessible dans le cadre de la préparation du site.

© 2022-2023 Nokia. Nokia Confidential Information
Use subject to agreed restrictions on disclosure and use.

- For DC (nominal 12, 24 VDC or 48 VDC) powered systems, the unit should be connected to a DC branch circuit with a 10 A (maximum for the 7705 SAR-Hm) or 5 A (maximum for the 7705 SAR-Hm) DC-rated circuit breaker or fuse that meets the requirements for branch circuit protection. A suitable disconnect device must be provided in the DC branch, either a circuit breaker, fuse, or switch that can be used to disconnect power to the system during servicing. For high-voltage DC applications, the circuit breaker or fuse must be approved for the applicable DC voltage.

  Pour les systèmes alimentés en courant continu (tension nominale de 12 VDC, 24 VDC ou de 48 VDC), l'unité doit être connectée à un circuit de dérivation DC avec un disjoncteur de 10 A au maximum (7705 SAR-Hm) ou 5A maximum (7705 SAR-Hmc) qui répond aux exigences de protection du circuit de dérivation. Un dispositif de déconnexion approprié, un disjoncteur ou un interrupteur capable de déconnecter l'alimentation du système pendant l'entretien, doit être prévu dans le circuit de dérivation DC. Pour les applications en courant continu haute tension, le disjoncteur ou le fusible doit être approuvé pour la tension en courant continue applicable.
- Disconnect all power feeds before installation and servicing.

  Débrancher toutes les AC ou les sources DC d'alimentation avant l'entretien.
- Systems equipped with DC power connections should be installed in restricted access areas, such as a dedicated equipment room or an equipment closet, in accordance with Articles 110-16, 110-17, and 110-18 of the National Electric Code ANSI/NFPA 70, and in accordance with local rules, statutes and electrical codes.

  Les systèmes équipés de connexions d’alimentation en courant continu doivent être installés dans des zones à accès restreint, comme un local spécial ou une armoire, conformément aux articles 110-16, 110-17 et 110-18 de la norme NEC (National Electric Code ou Code national de l’électricité) ANSI/NFPA 70 ainsi qu’aux réglementations, statuts et codes de l’électricité locaux.
- All AC power cords, DC power cords, and ground cables for equipment must meet local rules, statutes, and electrical codes.

  Tous les câbles d’alimentation AC ou DC ainsi que les câbles de mise à la terre de l’équipement doivent être conformes aux réglementations, statuts et codes de l’électricité locaux.
- Never make equipment connections in wet locations.

  Ne branchez jamais l’équipement dans des endroits humides.

© 2022-2023 Nokia. Nokia Confidential Information
Use subject to agreed restrictions on disclosure and use.

2.3.1 Ground Connections / Raccordement à la Terre

- The chassis must be correctly connected to earth ground.

  Le châssis doit être correctement raccordé à la terre.
- Ground connection on the chassis is mandatory. The gauge of the chassis ground wire must match or exceed the gauge of the supply conductors.

  La mise à la terre du châssis est obligatoire. La section du câble de terre du châssis doit être au moins égale à celle des conducteurs d'alimentation.
- When wiring the unit, the ground connection must always be made first and disconnected last.

  Lors du câblage de l'unité, le câble de terre doit toujours être raccordé en premier et déconnecté en dernier.

2.3.2 LASER Transceiver / Émetteur-récepteur LASER

- Class 1 LASER product

  Appareil à LASER de classe 1
- Pluggable optic modules are very hot while in use. Touch only the extraction lever or handle when removing the module. Allow the module to cool before further handling.

  Les modules optiques enfichables sont très chauds lorsqu'ils fonctionnent. Touchez uniquement le levier ou la poignée d'extraction lorsque vous retirez le module. Laissez-le refroidir avant de poursuivre la manipulation.

2.3.3 Lightning / Foudre

- Lightning strikes are possible during stormy weather and could result in death or severe injury. Do not work on antenna installation or on power supply lines or antenna feeds during stormy weather.

  La foudre est possible par temps orageux et peut entraîner la mort ou des blessures graves. Ne travaillez pas sur l'installation de l'antenne, sur les lignes d'alimentation électrique ou les alimentations de l'antenne en cas d'orage.
- With AC power ports, an external surge protection device is intended to be used at the AC input of the router.

  Avec les ports d'alimentation AC, un dispositif externe de protection contre les surtensions est destiné à être utilisé à l'entrée AC du routeur.

© 2022-2023 Nokia. Nokia Confidential Information
Use subject to agreed restrictions on disclosure and use.

2.3.4 Physical Safety / Sécurité Physique

- Always keep your fingers away from rotating fan blades. Do not put your fingers or any tool near a fan if the fans are still spinning. Allow the fans to spin down and fully stop before servicing.

  Tenez toujours vos doigts éloignés des pales du ventilateur en rotation. Ne placez pas vos doigts ou tout autre outil à proximité d’un ventilateur s’il tourne encore. Laissez les ventilateurs s’arrêter complètement avant l’entretien.
- Before working on equipment that is connected to power, remove jewelry, such as rings, necklaces, and watches. When metal objects are in contact with power and ground, serious burns can occur or the objects can become welded to the terminals.

  Avant de travailler sur un équipement connecté à l'alimentation, retirez vos bijoux, tels que les bagues, les colliers et les montres. Lorsque des objets métalliques entrent en contact avec l'alimentation et la terre, de graves brûlures peuvent survenir ou les objets peuvent se souder aux bornes.

2.3.5 Electrical Safety / Sécurité Électrique

- Only connect like circuits: SELV to SELV (ES1 to ES1), TNV-2 to TNV-2 (ES2 to ES2), and Primary to Primary (ES3 to ES3), as defined in IEC 60950-1 and 62368-1.

  Ne connectez que les circuits identiques: SELV à SELV (ES1 à ES1), TNV-2 à TNV-2 (ES2 à ES2) et primaire à primaire (ES3 à ES3), conformément à la définition des normes CEI 60950-1 et 62368-1.
- The intrabuilding ports of the equipment must use shielded intrabuilding cabling/wiring that is grounded at both ends.

  Les ports de l’équipement se trouvant à l’intérieur d’un bâtiment doivent utiliser un câblage intérieur blindé mis à la terre aux deux extrémités.

© 2022-2023 Nokia. Nokia Confidential Information
Use subject to agreed restrictions on disclosure and use.

2.4 General Requirements

The sections that follow outline the mandatory regulations that govern the installation and operation of the 7705 SAR-Hm and 7705 SAR-Hmc. The information in this section also describes instructions and information related to overall conformance with the mandatory regulations. You must adhere to these instructions so that your system meets regulatory requirements.

Danger: Before working on equipment that is connected to power, remove jewelry, such as rings, necklaces, and watches. When metal objects are in contact with power and ground, serious burns can occur or the objects can become welded to the terminals.

Warning: The compliance and long-term reliability of the 7705 SAR-Hm and 7705 SAR-Hmc are wholly dependent on using the product within the environmental limits and restrictions described in the Site Preparation chapter.

2.4.1 Anti-static Measures

Figure 1 shows the ESD awareness label used on Nokia products to alert personnel to the presence of ESD-sensitive devices in the product. The necessary ESD precautions must be taken whenever this symbol is present on the product.

Figure 1 **ESD Awareness Label**

17658

This guide uses the following icon and associated text to provide special information relating to ESD-sensitive activities or situations.

© 2022-2023 Nokia. Nokia Confidential Information
Use subject to agreed restrictions on disclosure and use.

Warning:

- ESD damage can occur if components are mishandled. The 7705 SAR-Hm and 7705 SAR-Hmc chassis must be properly grounded. The grounding point is located at the bottom of the chassis faceplate.
- Always wear an ESD-preventive wrist or ankle strap connected to a nearby ground point that is connected to the site grounding point when working on the 7705 SAR-Hm, 7705 SAR-Hmc, or the 35W High Voltage Power Supply.

The risk of damage to an ESD-sensitive device is reduced considerably after assembly in a circuit designed to protect sensitive components; however, the following basic precautions should be taken to reduce ESD to harmless levels.

- Handle all units as if they contained ESD-sensitive devices unless they are known not to contain ESD-sensitive parts.
- Wear an anti-static ESD strap on your wrist or heel prior to and while touching or handling units containing ESD-sensitive devices.
- For surfaces with resistance to ground in excess of 100 MΩ, such as ordinary tile, either cover them with properly grounded static dissipative runners or wax them with a static dissipative wax.
- Store (even temporarily), pack, and ship units in anti-static bags or containers.
- Do not handle units and components unnecessarily.
- Do not use synthetic bristled brushes or acid brushes to clean units.
- Handle failed units with the same precautions as working units.

2.4.1.1 ESD Grounding

When a 7705 SAR-Hm or 7705 SAR-Hmc chassis is properly installed in a grounded equipment rack, the rack provides ESD grounding for the chassis. Before a 7705 SAR-Hm or 7705 SAR-Hmc chassis is installed, connect the ESD wrist strap to a grounded rack or other ground point. After the chassis is installed in a grounded rack or cabinet, connect the anti-static wrist strap to the ground point on the front of the chassis. See Figure 2 and Figure 3.

© 2022-2023 Nokia. Nokia Confidential Information
Use subject to agreed restrictions on disclosure and use.

Figure 2 **Ground Point on the Front of the 7705 SAR-Hm Chassis**

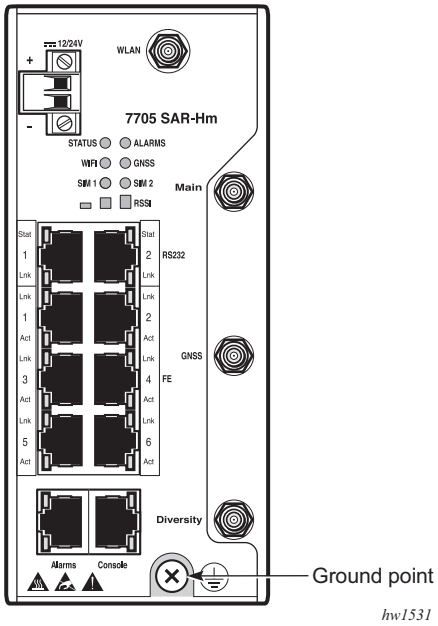

Figure 3 **Ground Point on the Front of the 7705 SAR-Hmc Chassis**

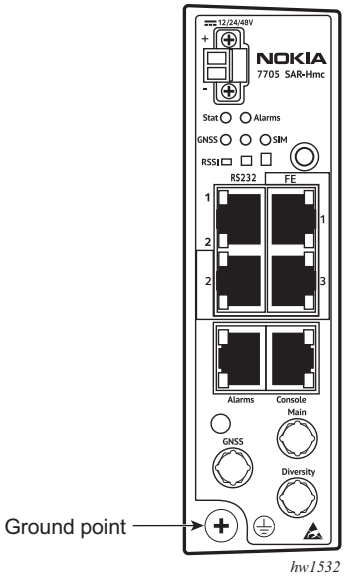

© 2022-2023 Nokia. Nokia Confidential Information
Use subject to agreed restrictions on disclosure and use.

2.4.2 Unit Repair

Return a damaged unit to an authorized Nokia repair center for service or repair.

2.4.3 Equipment Interconnection Points

Warning: Only connect like circuits: SELV to SELV or TNV-2 to TNV-2, as defined in IEC 60950-1, and ES1 to ES1 or ES2 to ES2, as defined in IEC 62368-1.

2.4.3.1 SELV and ES1

The following interconnection points on all 7705 SAR-Hm and 7705 SAR-Hmc chassis are SELV or ES1 connections:

- Ethernet (10/100Base-T) ports
- Alarm port
- Console port
- RS-232 ports
- DC power input terminal block

2.4.3.2 Primary and ES3

The following interconnection points on all HV-PS35 external power are Primary or ES3 connections:

- AC
- HV DC (high voltage DC; from 88 VDC up to 300 VDC)

2.4.4 Prevention of Access

The 7705 SAR-Hm and 7705 SAR-Hmc must be accessible only to authorized, trained service personnel. Install this apparatus in a restricted access location or similar environment to prevent unauthorized access.

© 2022-2023 Nokia. Nokia Confidential Information
Use subject to agreed restrictions on disclosure and use.

2.4.5 Environmental Requirements for Installation

For information about the environmental requirements for installing the 7705 SAR-Hm and 7705 SAR-Hmc, see Installation Locations.

2.4.6 Protective Safety Ground (Earth)

The cable used for safety ground must be at minimum 12 AWG (3.3 sq mm; 2.0 mm diameter) in size, green and yellow in color, and of sufficient length to connect the building earth point to the chassis ground connection. This 12 AWG ground wire exceeds the minimum safety requirement, to also address compliance with the EMC surge requirements. See Grounding the Chassis for instructions on connecting the chassis ground.

2.4.7 EMC Compliance

EMC compliance requires the use of shielded cables and may require other special accessories. Where required, these special accessories must be installed as per the instructions.

To maintain EMC compliance, cables that are shielded and grounded at both ends must be used on the following interfaces and ports:

- Console port
- RJ-45 Alarm port
- Ethernet interfaces
  - Fast Ethernet (CAT5 minimum)
- RS-232 interfaces

2.4.8 Regulatory Symbols

The 7705 SAR-Hm and 7705 SAR-Hmc use various regulatory symbols, which may be used on product markings such as approvals labels. These symbols are described in IEC 60417 and shown in Table 3.

© 2022-2023 Nokia. Nokia Confidential Information
Use subject to agreed restrictions on disclosure and use.

Table 3 **Regulatory Symbols**

Symbol	Meaning	Description
	Protective earth (ground)	This symbol indicates that you must connect to earth ground before you make any other connections to the equipment.
	Protective bond	This symbol indicates that you must provide a protective bond connection on the equipment; that is, any accessible metal parts that could become energized must be properly bonded to the earthed chassis.
	Hot surface	This symbol indicates that the equipment surface is hot to the touch when it is powered on or during maintenance when a subassembly is removed.
	Direct current	This symbol indicates that the equipment is suitable for direct current only.
	Alternating current	This symbol indicates that the equipment is suitable for alternating current only.
	Caution	This symbol indicates that caution should be taken when handling the equipment.
	Read operator’s manual	This symbol indicates that the operator’s manual or card instructions should be read before continuing with an operation.

© 2022-2023 Nokia. Nokia Confidential Information
Use subject to agreed restrictions on disclosure and use.

2.5 Safety Approvals

This product is approved by an NRTL and also the IECEE CB Scheme. It is compliant with IEC 60950-1 and IEC 62368-1, with all country deviations.

© 2022-2023 Nokia. Nokia Confidential Information
Use subject to agreed restrictions on disclosure and use.

2.6 Safety Approval for External DC Sources That Power This Equipment

2.6.1 Low-Voltage DC Sources, Nominal 12/24/48 VDC

The low-voltage DC source, from which this equipment derives power, must be safety approved (as per local requirements) and meet the requirements of a SELV source as defined in IEC/UL/CSA/EN 60950-1, or an ES2 source as defined in IEC/UL/CSA/EN 62368-1.

2.6.2 High-Voltage DC Sources, 88 to 300 VDC

The high voltage DC source, from which the HV-PS35 external Power Supply derives power, must be safety approved (as per local requirements) and meet the requirements of a Hazardous Voltage Secondary source as defined in IEC/UL/CSA/EN 60950-1, or an ES3 source as defined in IEC/UL/CSA/EN 62368-1.

The external DC source must have double or reinforced levels of insulation, isolating the DC output from the AC mains. (AC mains are sources up to and including 300 Vrms, including 230/400 V and 277/480 V sources).

Note: Only the low-voltage DC option is approved for hazardous locations.

© 2022-2023 Nokia. Nokia Confidential Information
Use subject to agreed restrictions on disclosure and use.

2.7 Canada Regulations

This section describes the mandatory regulations that govern the installation and operation of the 7705 SAR-Hm and 7705 SAR-Hmc in Canada.

2.7.1 Industry Canada Regulations

ICES-003: Interference-Causing Equipment Standard - Information Technology Equipment (ITE) - Limits and methods of measurement

Note: Changes or modifications not expressly approved by Nokia could void the user's authority, granted by Nokia's certification by Industry Canada, to operate the equipment.

This Class A digital apparatus complies with Canadian ICES-003.

Cet appareil numérique de la classe A est conforme à la norme NMB-003 du Canada.

2.7.2 General Requirements for Compliance of Radio Apparatus (RSS-GEN)

The 7705 SAR-Hm contains licensed and license-exempt transmitter modules. The 7705 SAR-Hmc only contains a licensed transmitter module.

The 7705 SAR-Hm licensed transmitter module is approved under the certification number IC:2417C-MC7455.

The 7705 SAR-Hmc (3HE12472AA) licensed transmitter module is approved under the certification number IC:24872-MG401.

The 7705 SAR-Hmc (3HE12473AA) licensed transmitter module is approved under the certification number IC:2417C-MC74B.

This device contains the license-exempt transmitter/receiver that complies with Innovation, Science and Economic Development Canada's license-exempt RSS-247.

© 2022-2023 Nokia. Nokia Confidential Information
Use subject to agreed restrictions on disclosure and use.

Operation is subject to the following two conditions.

- This device may not cause interference.
- This device must accept any interference, including interference that may cause undesired operation of the device.

L’émetteur/récepteur exempt de licence contenu dans le présent appareil est conforme aux CNR d’Innovation, Sciences et Développement économique Canada applicables aux appareils radio exempts de licence. L’exploitation est autorisée aux deux conditions suivantes.

- L’appareil ne doit pas produire de brouillage.
- L’appareil doit accepter tout brouillage radioélectrique subi, même si le brouillage est susceptible d’en compromettre le fonctionnement.

This radio transmitter [IC: 8407A-RS9113DB] has been approved by Innovation, Science and Economic Development Canada to operate with the antenna types listed below, with the maximum permissible gain indicated. Antenna types not included in this list that have a gain greater than the maximum gain indicated for any type listed are strictly prohibited for use with this device.

Le présent émetteur radio [IC: 8407A-RS9113DB] a été approuvé par Innovation, Sciences et Développement économique Canada pour fonctionner avec les types d'antenne énumérés ci-dessous et ayant un gain admissible maximal. Les types d'antenne non inclus dans cette liste, et dont le gain est supérieur au gain maximal indiqué pour tout type figurant sur la liste, sont strictement interdits pour l'exploitation de l'émetteur.

The maximum antenna gain must not exceed the limits listed in Table 4 and Table 5.

Note: WiFi (WLAN) is not supported on the 7705 SAR-Hmc.

Table 4 **WiFi Antenna Gain Limits**

WLAN Frequency (MHz)	Max Omni-directional Antenna Gain (dBi)	EIRP Limit (dBm)
2412- 2484	18	36
5150-5250	5	23
5250-5350	18	30
5470-5600	18	30

© 2022-2023 Nokia. Nokia Confidential Information
Use subject to agreed restrictions on disclosure and use.

Table 4 **WiFi Antenna Gain Limits (Continued)**

WLAN Frequency (MHz)	Max Omni-directional Antenna Gain (dBi)	EIRP Limit (dBm)
5650-5725	18	30
5725-5850	18	30

Note:

- The device for operation in the band 5150–5250 MHz is only for indoor use to reduce the potential for harmful interference to co-channel mobile satellite systems (devices installed in vehicles are permitted).
- For devices with detachable antennas, the maximum antenna gain permitted for devices in the bands 5250-5350 MHz and 5470-5725 MHz shall be such that the equipment still complies with the Maximum Effective Isotropic Radiated Power (EIRP) limit.
- For devices with detachable antennas, the maximum antenna gain permitted for devices in the band 5725-5850 MHz shall be such that the equipment still complies with the EIRP limits, as appropriate.
- Where applicable, antenna types, antenna models, and worst-case tilt angles necessary to remain compliant with the EIRP. elevation mask requirement set forth in RSS-247 section 6.2.2.3 shall be clearly indicated.

Table 5 **LTE Antenna Gain Limits**

Band	LTE Frequency (MHz)	EIRP Limit (dBm)
2	1850 to 1910	30
4	1710 to 1755	30
5	824 to 849	30
7	2500 to 2570	33
12	699 to 716	30
13	777 to 787	30
17	704 to 716	30
25	1850 to 1915	30
26	814 to 849	30
30 [1]	2305 to 2315	See Note 1
41	2496 to 2690	33

© 2022-2023 Nokia. Nokia Confidential Information
Use subject to agreed restrictions on disclosure and use.

Table 5 **LTE Antenna Gain Limits (Continued)**

Band	LTE Frequency (MHz)	EIRP Limit (dBm)
66	1710 to 1780	30

Note:

1. The EIRP limit in Band 30 for mobile stations must not have an antenna gain exceeding 1 dBi in Band 30. Additionally, the IC prohibits the use of external vehicle-mounted antennas for mobile stations in this band. Fixed subscriber stations in Canada may have an antenna gain of up to 10 dBi in Band 30; however, the use of outdoor antennas or outdoor station installations are prohibited, except if installed professionally in locations that are at least 20 meters from roadways or in locations where it can be shown that the ground power level of -44 dBm per 5 MHz in the bands 2305–2315 MHz and 2350–2360 MHz or -55 dBm per 5 MHz in the bands 2315–2320 MHz and 2345–2350 MHz will not be exceeded at the nearest roadway.

2.7.3 EMC Compliance

EMC compliance requires the use of shielded cables or other special accessories. These special accessories must be installed as per the instructions. See section EMC Compliance for additional information.

2.7.4 RF Exposure

The 7705 SAR-Hm and 7705 SAR-Hmc comply with the RSS-102 RF Exposure limits when operating with the allowed maximum gain antennas defined by Nokia. At least 7.9 in. (20 cm) separation distance between the operator or bystander and the 7705 SAR-Hm or 7705 SAR-Hmc antenna must be maintained at all times.

© 2022-2023 Nokia. Nokia Confidential Information
Use subject to agreed restrictions on disclosure and use.

2.8 United States Regulations

This section describes the mandatory regulations that govern the installation and operation of the 7705 SAR-Hm and 7705 SAR-Hmc in the United States.

2.8.1 Federal Communications Commission

2.8.1.1 EMC Regulations

FCC Part 15

Note: Changes or modifications not expressly approved by Nokia could void the user's authority, granted by Nokia's certification by the FCC, to operate the equipment.

This device complies with Part 15 of the FCC Rules. Operation is subject to the following two conditions: (1) this device may not cause harmful interference, and (2) this device must accept any interference received, including interference that may cause undesired operation.

2.8.1.2 RF Regulations

The 7705 SAR-Hm is a mobile device and operates in the cellular bands. It contains licensed and license-exempt transmitter modules.

The 7705 SAR-Hm contains the licensed transmitter module that is approved under the certification number FCC ID: N7NMC7455.

The 7705 SAR-Hm contains the WLAN module that is certified under the FCC ID: XF6-RS9113DB.

The 7705 SAR-Hmc systems are mobile devices and operate in the cellular bands. The systems only contain a licensed transmitter module. WLAN is not supported on the 7705 SAR-Hmc systems.

The 7705 SAR-Hmc (3HE12472AA) contains the licensed transmitter module that is approved under the certification number FCC ID: 2AU8H-MG401.

© 2022-2023 Nokia. Nokia Confidential Information
Use subject to agreed restrictions on disclosure and use.

The 7705 SAR-Hmc (3HE12472AA) system can also be configured as a CBSD Category A or B, and is approved under the certification number FCC ID: AS57705SARHMC-1.

The 7705 SAR-Hmc (3HE12473AA) contains the licensed transmitter module that is approved under the certification number FCC ID: N7MMC74B.

The 7705 SAR-Hmc (3HE12473AA) system can also be configured as a CBSD Category A or B, and is approved under the certification number FCC ID: AS57705SARHMC-2B.

2.8.2 FCC RF-Exposure Regulations

These safety requirements require additional care to ensure that normal accessible areas near the antenna do not exceed the Uncontrolled Exposure limit, as specified in the FCC RF-Exposure Regulations.

FCC provides two exposure limits depending on the situation: 1) “Controlled” or occupational exposure, 2) “Uncontrolled”, which defines the exposure limit to the general public. A detailed discussion of the guidelines and adopted limits are included in FCC technical bulletin, OET Bulletin 65.

The 7705 SAR-Hm and 7705 SAR-Hmc comply with the Bulletin OET 65 RF Exposure limits when operating with the allowed maximum gain antennas defined by Nokia. At least 7.9 in. (20 cm) separation distance between the operator or bystanders and the 7705 SAR-Hm or 7705 SAR-Hmc antenna must be maintained at all times, as defined in the FCC 2.1091. When operating in Band 48 as a Category B device with antenna gains exceeding 7 dBi, installations must be such that at least 19.7 in. (50 cm) is maintained between all persons and the antenna during operation.

As a mobile deployment, the LTE and WLAN ports can transmit simultaneously on a 7705 SAR-Hm. The colocated configuration must not exceed the limits listed in Table 6 and Table 7.

Table 6 **Indoor WLAN Antenna Gain Limits**

WLAN Frequency (MHz)	Max Omni-directional Antenna Gain (dBi)	EIRP Limit (dBm)
2412- 2484	7	25
5150-5825	15	27

© 2022-2023 Nokia. Nokia Confidential Information
Use subject to agreed restrictions on disclosure and use.

Note: When selecting antennas, the maximum power spectral density limits as per FCC Part 15 Subpart E Section 15.407 shall not be exceeded for the 5GHz range. For the 2.4GHz range, the FCC Part 15 Subpart C Section 15.247 requirements shall not be exceeded.

Table 7 **LTE Antenna Gain Limits**

Band	LTE Frequency (MHz)	EIRP Limit (dBm)
2	1850 to 1910	30
4	1710 to 1755	30
5	824 to 849	30
12	699 to 716	30
13	777 to 787	30
17	704 to 716	30
25	1850 to 1915	30
26	814 to 849	30
30 [1]	2305 to 2315	See Note 1
41	2496 to 2690	33
48	3550 to 3700	EUD > 23 Category A > 30 Category B > 47
66	1710 to 1780	30

Note:

1. EIRP limit in Band 30 for mobile stations must not have antenna gain exceeding 1 dBi in Band 30. Additionally, the FCC prohibit the use of external vehicle-mounted antennas for mobile stations in this band. Fixed customer premises equipment (CPE) stations in the United States may have an antenna gain up to 10 dBi in Band 30; however, the use of outdoor antennas or outdoor station installations are prohibited except if professionally installed in locations that are at least 20 meters from roadways or in locations where it can be shown that the ground power level of -44 dBm per 5 MHz in the bands 2305 to 2315 MHz and 2350 to 2360 MHz or -55 dBm per 5 MHz in the bands 2315 to 2320 MHz and 2345 to 2350 MHz will not be exceeded at the nearest roadway.

Note: This device is certified for mobile and fixed applications. Under no conditions may an antenna gain be used that exceed the EIRP power limit as specified in Part 22/24/27/90/96.

© 2022-2023 Nokia. Nokia Confidential Information
Use subject to agreed restrictions on disclosure and use.

2.9 European Union Regulations

This section describes the mandatory regulations that govern the installation and operation of the 7705 SAR-Hm and 7705 SAR-Hmc in the European Union.

2.9.1 Declaration of Conformity

Hereby, Nokia declares that the equipment documented in this publication is in compliance with the essential requirements and other relevant provisions of Directive 2014/35/EU, Directive 2014/30/EU, and Directive 2011/65/EU (including Commission Delegated Directive (EU) 2015/863). Where radio devices are used, Directive 2014/53/EU applies.

The technical documentation as required by the Conformity Assessment procedure is kept at the Nokia location that is responsible for this product. For more information, please contact your local Nokia Customer Service Organization.

2.9.2 EU Compliance Statement

This product has been CE marked in accordance with the requirements of European Directives 2014/35/EU Low Voltage (LVD) Directive, 2014/30/EU Electromagnetic Compatibility (EMC), 2011/65/EU Restriction of Hazardous Substances (Recast) Directive, including Commission Delegated Directive (EU) 2015/863 amending Annex II to Directive 2011/65/EU of the European Parliament and of the Council as regards the list of restricted substances, and for radio devices, 2014/53/EU Radio Equipment Directive (RED).

2.9.3 EMC/EMI Compliance

The equipment complies with the following EMC and EMI specification: EN 301 489-1 Class A.

© 2022-2023 Nokia. Nokia Confidential Information
Use subject to agreed restrictions on disclosure and use.

2.9.4 Radio Compliance

The equipment complies with the applicable requirements in ETSI EN 301 908-2 and EN 301 908-13.

The equipment complies with the applicable WLAN requirements in ETSI EN 300 328 (2.4GHz) and EN 301 893 (5GHz). In the frequency band 5 150-5 350 MHz, the band is restricted to indoor use with a maximum mean EIRP of 200 mW (23dB).

2.9.5 RF Exposure

The 7705 SAR-Hm and 7705 SAR-Hmc comply with the EN62311 RF Exposure limits when operating with the allowed maximum gain antennas defined by Nokia. At least 7.9 in. (20 cm) separation distance between the operator or bystander and the 7705 SAR-Hm or 7705 SAR-Hmc antenna must be maintained at all times.

The EIRP levels are maintained when operating with the antennas provided by Nokia.

2.9.6 Protective Earth

Protective earth is referred to as chassis ground in this document. A green and yellow colored earth wire must be connected from the site equivalent of the mains earth connection to all shelves in accordance with IET Wiring Regulations (use the most recent edition available). This connection is made via the chassis ground connection (see Grounding the Chassis for specific instructions on connecting the protective earth).

2.9.7 Eco-Environmental

Packaging Collection and Recovery Requirements

Countries, states, localities, or other jurisdictions may require that systems be established for the return and/or collection of packaging waste from the consumer, or other end user, or from the waste stream. Additionally, reuse, recovery, and/or recycling targets for the return and/or collection of the packaging waste may be established.

© 2022-2023 Nokia. Nokia Confidential Information
Use subject to agreed restrictions on disclosure and use.

For more information regarding collection and recovery of packaging and packaging waste within specific jurisdictions, please contact the appropriate environmental health and safety organization.

Recycling / Take-back / Disposal of Product

Electronic products bearing or referencing the symbol shown in Figure 4, when put on the market within the European Union, shall be collected and treated at the end of their useful life in compliance with applicable European Union and local legislation. They shall not be disposed of as part of unsorted municipal waste. Due to materials that may be contained in the product, such as heavy metals or batteries, the environment and human health may be negatively impacted as a result of inappropriate disposal.

Note: In the European Union, the WEEE symbol (a wheeled trash bin that has been crossed out and is positioned above a solid bar) indicates that the product was put on the market after 13 August 2005. This product is compliant with the WEEE marking requirements of Directive 2012/19/EU Waste Electrical and Electronic Equipment (WEEE).

Figure 4 **WEEE Symbol for post-August 13, 2005 Product**

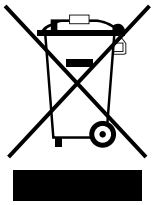

21828

Moreover, in compliance with legal requirements and contractual agreements, where applicable, Nokia will offer to provide for the collection and treatment of Nokia products bearing the logo at the end of their useful life, or products displaced by Nokia equipment offers. For information regarding take-back of equipment by Nokia, or for more information regarding the requirements for recycling/disposal of product, please contact your Nokia Account Manager or Nokia Takeback Support.

© 2022-2023 Nokia. Nokia Confidential Information
Use subject to agreed restrictions on disclosure and use.

2.9.8 Material Content Compliance

European Union (EU) Directive 2011/65/EU, “Restriction of the use of certain hazardous substances in electrical and electronic equipment” (recast), and Commission Delegated Directive (EU) 2015/863 restrict the use of lead, mercury, cadmium, hexavalent chromium, phthalate, and certain flame retardants in electrical and electronic equipment. The Directive 2011/65 EU applies to electrical and electronic products placed on the EU market after 2 January 2013, and the (EU) 2015/863 amendment after 22 July 2019. Nokia products shipped to the EU comply with the EU RoHS 2 Directive and latest amendments. Nokia ensures that equipment is assessed in accordance with the Harmonised Standard EN IEC 63000:2018 (CENELEC) on “Technical documentation for the assessment of electrical and electronic products with respect to the restriction of hazardous substances”.

© 2022-2023 Nokia. Nokia Confidential Information
Use subject to agreed restrictions on disclosure and use.

2.10 United Kingdom Regulations

This section describes the mandatory regulations that govern the installation and operation of the 7705 SAR-Hm and 7705 SAR-Hmc in the United Kingdom.

2.10.1 Declaration of Conformity

Hereby, Nokia declares that the equipment documented in this publication is in compliance with the essential requirements and other relevant provisions of:

- Electromagnetic Compatibility Regulations 2016
- Electrical Equipment (Safety) Regulations 2016
- Radio Equipment Regulations 2017
- The Restriction of the Use of Certain Hazardous Substances in Electrical and Electronic Equipment Regulations 2012

The technical documentation as required by the Conformity Assessment procedure is kept at the Nokia location that is responsible for this product. For more information, please contact your local Nokia Customer Service Organization.

This product has been UKCA marked in accordance with the requirements of the Regulations.

2.10.1.1 EMC/EMI Compliance

The equipment complies with the following EMC and EMI specifications:

EN 300 386 Class A and EN 301 489-1 Class A

2.10.1.2 Laser Interface

The system uses laser devices that are rated in accordance with IEC 60825-1 as Class 1 devices.

© 2022-2023 Nokia. Nokia Confidential Information
Use subject to agreed restrictions on disclosure and use.

2.10.1.3 Protective Earth

Protective earth is referred to as chassis ground in this document. A green, or green and yellow, colored earth wire must be connected from the site equivalent of the mains earth connection to all shelves in accordance with IET Wiring Regulations (use the most recent edition available). This connection is made via the chassis ground connection (see Grounding the Chassis for specific instructions for connecting the protective earth).

This equipment must be permanently grounded.

2.10.1.4 Material Content Compliance

The Restriction of the Use of Certain Hazardous Substances in Electrical and Electronic Equipment Regulations 2012 restricts the use of lead, mercury, cadmium, hexavalent chromium, phthalate, and certain flame retardants in electrical and electronic equipment.

Nokia ensures that equipment is assessed in accordance with the Standard EN IEC 63000:2018 (CENELEC) on “Technical documentation for the assessment of electrical and electronic products with respect to the restriction of hazardous substances”.

© 2022-2023 Nokia. Nokia Confidential Information
Use subject to agreed restrictions on disclosure and use.

2.11 Australia/New Zealand Regulations

This section describes the mandatory regulations that govern the installation and operation of the 7705 SAR-Hm and 7705 SAR-Hmc in Australia and New Zealand.

2.11.1 ACMA Regulations

The 7705 SAR-Hm and 7705 SAR-Hmc chassis comply with the ACMA requirements, and the product is marked with the RCM logo under the Supplier Code E762.

EMC

This Class A digital apparatus complies with AS/NZS CISPR 32.

Safety

All products supplied in Australia comply with an applicable Australian Standard electrical safety standard.

The 7705 SAR-Hm and 7705 SAR-Hmc chassis comply with the AS/Telecommunications requirements.

© 2022-2023 Nokia. Nokia Confidential Information
Use subject to agreed restrictions on disclosure and use.

2.12 China Regulations

The statements that follow are the product conformance statements that apply to the 7705 SAR-Hm and 7705 SAR-Hmc when deployed in China.

2.12.1 Packaging Collection and Recovery Requirements

Jurisdictions in the People's Republic of China may require that systems be established for the return and/or collection of packaging waste from the consumer, or other end user, or from the waste stream. Additionally, reuse, recovery, and/or recycling targets for the return and/or collection of the packaging waste may be established.

For more information regarding collection and recovery of packaging and packaging waste within specific jurisdictions, please contact the appropriate environmental health and safety organization.

2.12.2 Material Content Compliance

The People's Republic of China Ministry of Information Industry has published a regulation (Order #39) and associated standards regarding restrictions on hazardous substances (China RoHS). The legislation requires all Electronic and Information Products (EIP) to comply with certain labeling and documentation requirements. Nokia products manufactured on or after 1 March 2007, that are intended for sale to customers in the China market, comply with these requirements.

In accordance with the People's Republic of China Electronic Industry Standard "Marking for the Control of Pollution Caused by Electronic Information Products" (SJ/T11364-2006), customers may access the Nokia Hazardous Substances Table, in Chinese, from the following location:

https://www.nokia.com/sites/default/files/2018-11/nokia_china_rohs-2_hst-4_0.pdf

2.12.3 Altitude Limit

Nokia products use the symbol shown in Figure 5 on the approvals label to indicate that the product is only to be used at altitudes equal to or less than 2000 m (6562 ft) above sea level.

© 2022-2023 Nokia. Nokia Confidential Information
Use subject to agreed restrictions on disclosure and use.

Figure 5 **Altitude Limit Symbol**

23467

仅适用于海拔2000m 以下地区安全使用” 或类似的警告语句

“Only used at altitudes no higher than 2000 m above sea level”

© 2022-2023 Nokia. Nokia Confidential Information
Use subject to agreed restrictions on disclosure and use.

2.13 South Korea Regulations

The following EMC statement applies to the 7705 SAR-Hm and 7705 SAR-Hmc when deployed in South Korea.

EMC

Class A Equipment (Broadcasting and Communication Equipment for Office Work)

A급 기기 (업무용 방송통신기자재)

The seller and user will be notified that this equipment is suitable for electromagnetic equipment for office work (Class A) and it can be used outside the home.

이 기기는 업무용(A급)으로 전자파적합기기로서 판매자 또는 사용자는 이 점을 주의하시기 바라며, 가정외의 지역에서 사용하는 것을 목적으로 합니다

South Korea's “Electrical Communication Basic Law” requires EMC testing and certification. Certified equipment will be labeled with the KC mark and certification number shown below:

Certification number: R-R-NOK-7705SAR-Hm

© 2022-2023 Nokia. Nokia Confidential Information
Use subject to agreed restrictions on disclosure and use.

2.14 Japan Regulations

The statements that follow are the product conformance statements that apply to the 7705 SAR-Hm and 7705 SAR-Hmc when deployed in Japan.

2.14.1 Safety

The equipment complies with the Product Safety specifications of IEC 60950-1 and/or IEC 62368-1.

Note:

- AC PSUs and AC cords sold by Nokia with a 3HExxxxxxx part number are dedicated for use with Nokia IP routers only.
- Based on the requirements from METI (Ministry of Economy, Trade and Industry), these AC PSUs and AC cords do not require PSE certification if used solely with Nokia IP routers.

2.14.2 EMC

This equipment is a VCCI Class A compliant product and is marked with the VCCI logo shown below.

Class A Equipment

この装置は、クラスA機器です。この装置を住宅環境で使用すると電波妨害を引き起こすことがあります。この場合には使用者が適切な対策を講ずるよう要求されることがあります。 VCCI-A

© 2022-2023 Nokia. Nokia Confidential Information
Use subject to agreed restrictions on disclosure and use.

This equipment is a Class A device. Operation of this equipment in a residential environment could cause radio interference. In such a case, the user may be required to take corrective actions. VCCI-A

© 2022-2023 Nokia. Nokia Confidential Information
Use subject to agreed restrictions on disclosure and use.

2.15 Hazardous Locations

2.15.1 Chassis Labels

The 7705 SAR-Hm and 7705 SAR-Hmc chassis display the following labels:

Class I, Division 2, Groups A,B,C,D T4
Ex ec IIC T4 Gc -40°C ≤ Ta ≤ 65°C
Class I, Zone 2, AEx ec IIC T4 Gc
Note: special conditions, see manual.

C US II 3G
CSA19CA70217830 Sira 19ATEX3282X

2.15.2 Conditions of Use

- The equipment shall be installed in an enclosure that provides a degree of protection not less than IP 54 in accordance with EN 60079-0 and EN 60079-7. Any field wiring connections or cable entries used for this outer enclosure shall also be suitably certified against the enclosure requirements of EN 60079-0 and EN 60079-7. The installer shall ensure that the maximum ambient temperature of the module when installed is not exceeded.
- The equipment shall only be used in an area of at least pollution degree 2, as defined in IEC 60664-1.
- The chassis shall be grounded as described in the in this manual before use.
- The SIM card shall be connected or disconnected only in a non-hazardous area or when the device is not energized.
- The end-use enclosure shall provide a Warning label “Do not open while energized”.

Note: See 7705 Outdoor Enclosure Requirements for Hazardous Locations for hazardous locations requirements pertaining to the 7705 Outdoor Enclosure.

© 2022-2023 Nokia. Nokia Confidential Information
Use subject to agreed restrictions on disclosure and use.

© 2022-2023 Nokia. Nokia Confidential Information
Use subject to agreed restrictions on disclosure and use.

3 7705 SAR-Hm and 7705 SAR-Hmc Overview

3.1 In This Chapter

This chapter provides an introduction to the 7705 SAR-Hm and 7705 SAR-Hmc. The topics include:

- Overview of the 7705 SAR-Hm and 7705 SAR-Hmc
- Cellular Components
- GNSS Components
- WLAN Components
- Citizens Broadband Radio Service
- ADP-Hm Prerequisites and Pre-staging Considerations
- Chassis Installation Process

© 2022-2023 Nokia. Nokia Confidential Information
Use subject to agreed restrictions on disclosure and use.

3.2 Overview of the 7705 SAR-Hm and 7705 SAR-Hmc

The 7705 SAR-Hm and 7705 SAR-Hmc are small form factor IP/MPLS routers. They are temperature and EMC-hardened and are passively cooled. The 7705 SAR-Hm supports cellular, GPS/GLONASS, and WLAN radio interfaces. The 7705 SAR-Hmc supports cellular and GPS/GLONASS radio interfaces. Figure 6 shows the 7705 SAR-Hm chassis. Figure 7 shows the 7705 SAR-Hmc chassis.

Figure 6 **7705 SAR-Hm Chassis**

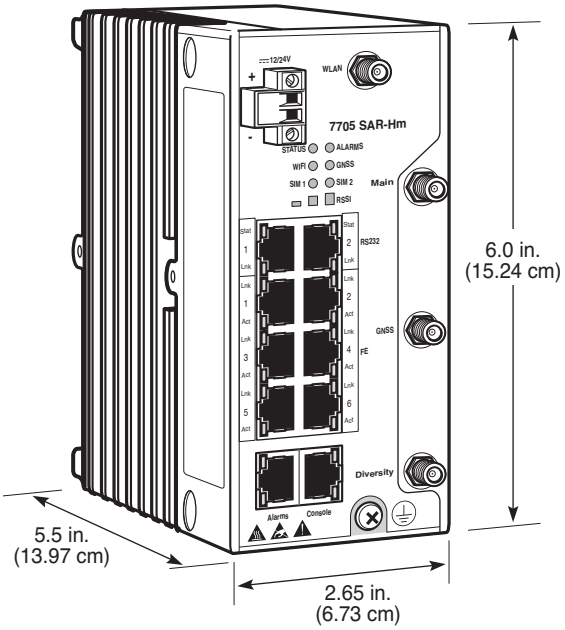

26450

© 2022-2023 Nokia. Nokia Confidential Information
Use subject to agreed restrictions on disclosure and use.

Figure 7 **7705 SAR-Hmc Chassis**

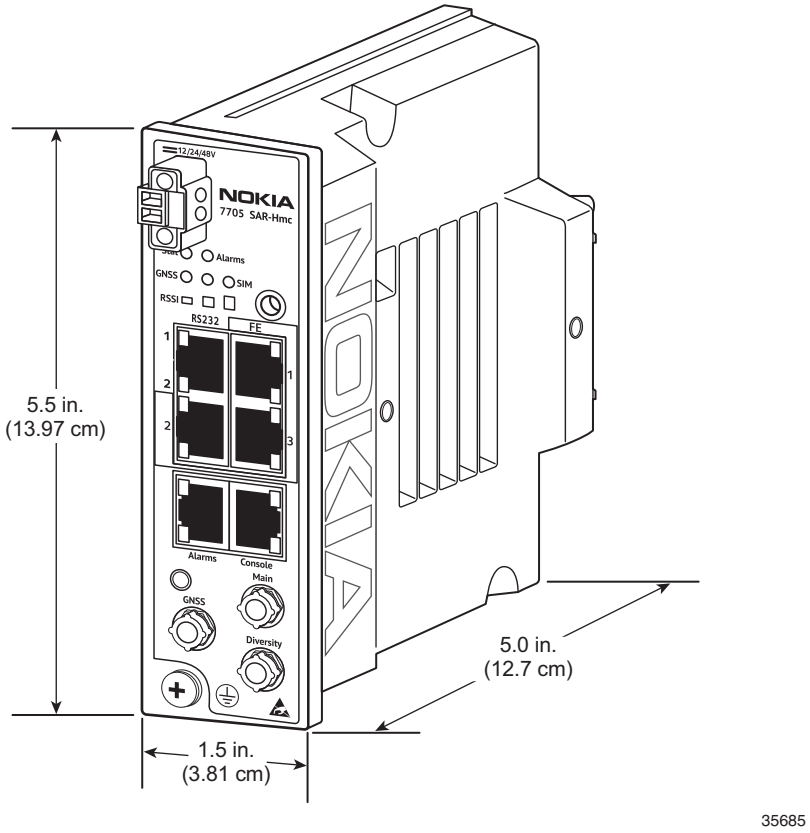

The 7705 SAR-Hm chassis is available in the following variants, each of which is distinguished by its factory-installed carrier wireless module. The modules are designed to support the radio protocols and bands used in the geographic regions specified in Table 8.

Table 8 **7705 SAR-Hm Chassis Variants by Carrier Wireless Module**

7705 SAR-Hm Chassis Part Number	Variant Description
3HE11600AA	7705 SAR-Hm 3G/LTE North America and EMEA
3HE11602AA	7705 SAR-Hm 3G/LTE APAC and ROW

© 2022-2023 Nokia. Nokia Confidential Information
Use subject to agreed restrictions on disclosure and use.

The 7705 SAR-Hmc chassis is available in the following variants. The modules are designed to support the radio protocols and bands used in the geographic regions specified in Table 9.

Table 9 **7705 SAR-Hmc Chassis Variants**

7705 SAR-Hmc Chassis Part Number	Variant Description
3HE12472AA	7705 SAR-Hmc NA
3HE12473AA	7705 SAR-Hmc NA Variant 2
3HE12474AA	7705 SAR-Hmc B31 (EMEA/CALA)
3HE12475AA	7705 SAR-Hmc B87 (EMEA/CALA)
3HE12477AA	7705 SAR-Hmc EMEA/APAC

All variants of the 7705 SAR-Hm and 7705 SAR-Hmc chassis have the same physical features and run the same operating system software. The terms 7705 SAR-Hm and 7705 SAR-Hmc are used in this document as a generic reference to all variants of the chassis. When referring to a specific chassis variant, the variant and part number are specified.

The 7705 SAR-Hm and 7705 SAR-Hmc chassis are designed for DIN-rail or flat-surface mounting and can be installed indoors or outdoors in enclosures (such as the 7705 Outdoor Enclosure), cabinets, or huts that provide weather and environmental protection in an extended temperature-controlled environment.

The 7705 SAR-Hm and 7705 SAR-Hmc support a low DC voltage input feed. The 7705 SAR-Hm supports a nominal rating of ± 12/24 VDC and the 7705 SAR-Hmc supports a nominal rating of ± 12/24/48 VDC. A separately orderable 35W High Voltage Power Supply Unit (HV-PS35) with an operating range of 88 VDC to 300 VDC or 90 VAC to 264 VAC is available for high-voltage applications.

The 7705 SAR-Hm chassis is equipped with six Fast Ethernet data ports and two RS-232 RJ-45 ports, WLAN, 3G/LTE, and GPS antenna connectors, console and alarm connectors, and indicator LEDs. All physical cabling connections are made at the front of the chassis, including the chassis ground connection and DC power input. All status and alarm LEDs are visible on the front of the chassis.

The 7705 SAR-Hmc chassis is equipped with three Fast Ethernet data ports and two RS-232 ports in a single RJ-45 connector, an LTE and GPS antenna connector, console and alarm connectors, and indicator LEDs. All physical cabling connections are made at the front of the chassis, including the chassis ground connection and DC power input. All status and alarm LEDs are visible on the front of the chassis.

© 2022-2023 Nokia. Nokia Confidential Information
Use subject to agreed restrictions on disclosure and use.

The 7705 SAR-Hm and 7705 SAR-Hmc TiMOS software is factory-installed. Configuration files and executable software are stored locally in the on-board flash memory. The system boots up when power is applied to the chassis.

The NSP Network Functions Manager - Packet (NSP NFM-P) can be used to discover, configure, and manage the 7705 SAR-Hm nodes and domains. When the 7705 SAR-Hm or 7705 SAR-Hmc is powered on for the first time, Auto-Discovery Protocol (ADP-Hm) is instantiated by a factory-installed default boot option that automates and simplifies the initial commissioning of 7705 SAR-Hm or 7705 SAR-Hmc. See ADP-Hm Prerequisites and Pre-staging Considerations for more information.

3.2.1 7705 SAR-Hm and 7705 SAR-Hmc Components

3.2.1.1 Chassis Features

Figure 8 and Figure 9 show the physical features on the front and back of the 7705 SAR-Hm and 7705 SAR-Hmc chassis. The back views shows the chassis with the rear cover removed.

Figure 8 **7705 SAR-Hm Chassis Front and Back Features**

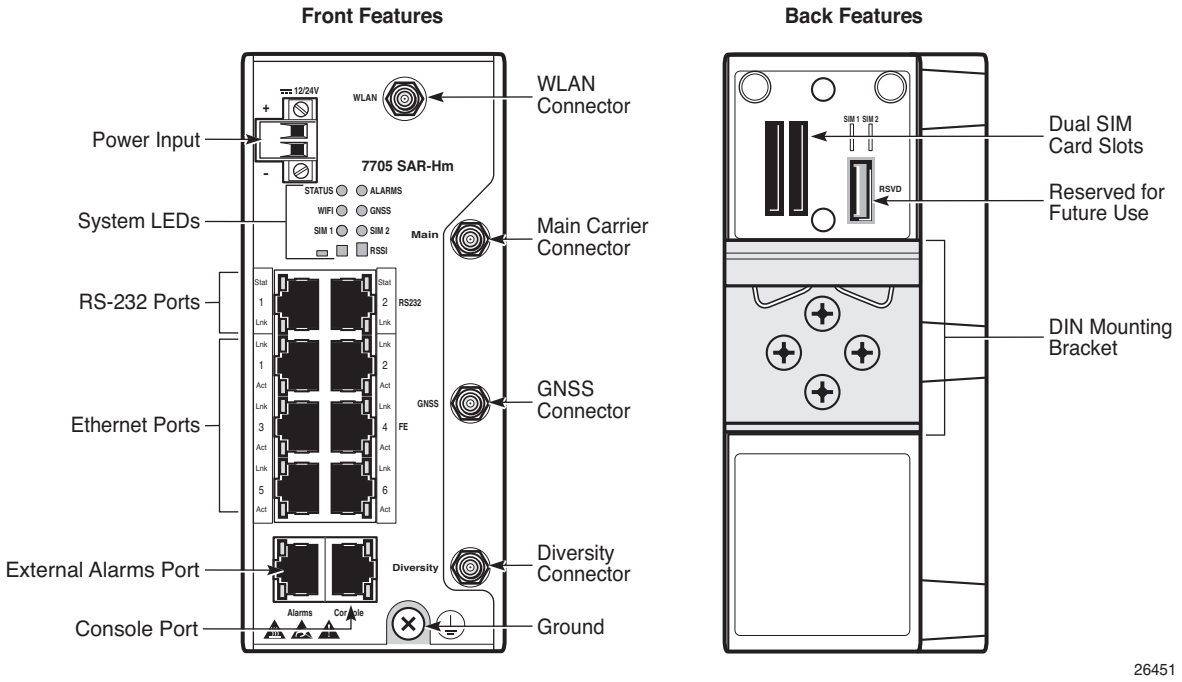

© 2022-2023 Nokia. Nokia Confidential Information
Use subject to agreed restrictions on disclosure and use.

Figure 9 **7705 SAR-Hmc Chassis Front and Back Features**

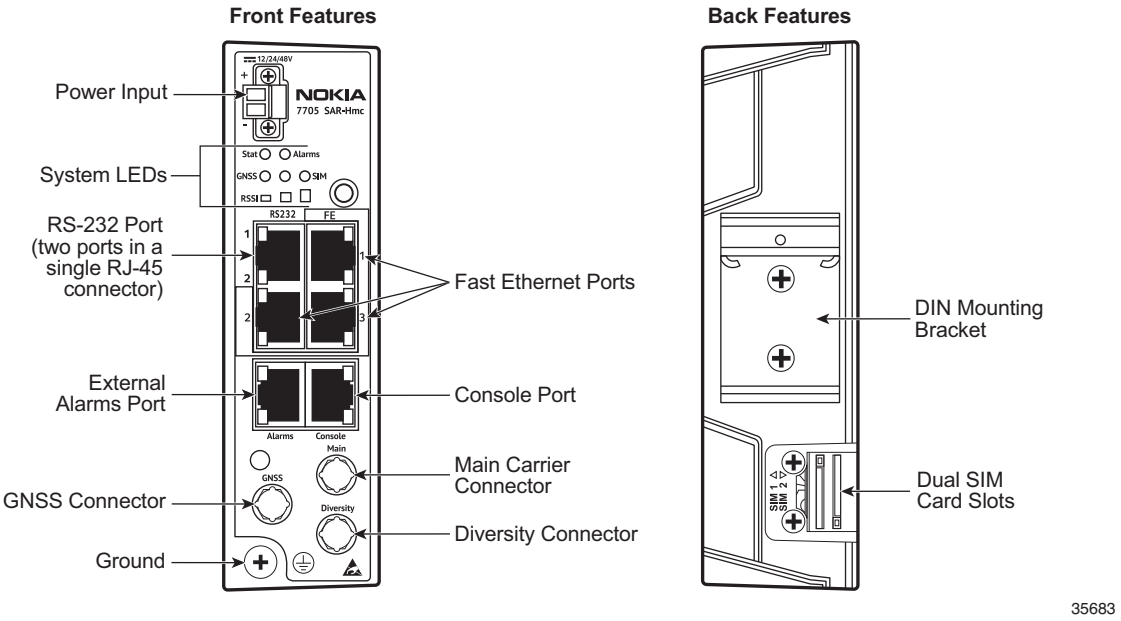

3.2.1.2 Ethernet Ports

The 7705 SAR-Hm chassis has six 10/100Base-T RJ-45 Fast Ethernet (FE) ports and the 7705 SAR-Hmc has three 10/100Base-T RJ-45 FE ports. When making a connection to an FE port, a shielded CAT5 (minimum) Ethernet cable grounded at both ends must be used to maintain EMC compliance.

See Ethernet Ports Pinout Assignments for pinout assignments.

3.2.1.3 RSVD Port

The reserved (RSVD) port on the back of the chassis is for Nokia use only.

3.2.1.4 RS-232 Ports

The 7705 SAR-Hm has two asynchronous RS-232 serial ports that use RJ-45 connectors. The 7705 SAR-Hmc supports two RS-232 ports in a single RJ-45 connector.

© 2022-2023 Nokia. Nokia Confidential Information
Use subject to agreed restrictions on disclosure and use.

When making a connection to an RS-232 port, a shielded cable grounded at both sides must be used to maintain EMC compliance (an 8-conductor cable is required on the 7705 SAR-Hm and a 4-conductor cable is required on the 7705 SAR-Hmc). If a connection to both RS-232 ports on the RJ-45 connector is required on the 7705 SAR-Hmc, a 7705 SAR-Hmc RS-232 Y-Cable (3HE12554AA) is required.

See RS-232 Ports Pinout Assignments for pinout assignments. Refer to the 7705 SAR-Hm and 7705 SAR-Hmc Main Configuration Guide for more information about how to configure and use these ports.

3.2.1.5 Console Port

The 7705 SAR-Hm and 7705 SAR-Hmc have a serial Console port that uses an RJ-45 connector to provide access to an RS-232 CLI craft terminal interface. The craft terminal is used during initial startup procedures, as described in Powering Up and Initializing. The Console port is not a permanent connection and must be used only for installation and maintenance routines.

A shielded cable grounded at least at one end must be used.

See Console Port Pinout Assignments for pinout assignments.

3.2.1.6 Alarms Port

The 7705 SAR-Hm and 7705 SAR-Hmc have an Alarms port that uses an RJ-45 connector to monitor and report external alarms. In a remote or outdoor deployment, alarm inputs typically allow an operator to detect conditions such as whether a door is open or closed or an air conditioner fault has occurred.

The Alarms port on the 7705 SAR-Hm supports three input and two output pins. The Alarms port on the 7705 SAR-Hmc supports three input pins. Pins can be configured to indicate the severity level of an event and the normally open/normally closed state. When an input pin changes state, the router can generate log events and raise facility alarms. For more information about input and output alarms and the Alarms port pinout assignments, see Alarms Port Pinout Assignments.

A shielded cable grounded at both ends must be used. For connections within the 7705 Outdoor Enclosure (a connection to the door alarm switch, for example), the shielded cable can be grounded at the 7705 SAR-Hmc Alarms port only.

© 2022-2023 Nokia. Nokia Confidential Information
Use subject to agreed restrictions on disclosure and use.

Note: Both the 7705 SAR-Hm and 7705 SAR-Hmc Alarms port inputs have 100k Ohm pull-up resistors to 3.3V.

3.2.1.7 Main and Diversity Antenna Connectors

The 7705 SAR-Hm and 7705 SAR-Hmc have two subminiature version A (SMA) (female) connectors on the front of the chassis that are designed for external Main and Diversity antennas. See Cellular Components for more information. See also Direct-mounting the Indoor LTE Omni-directional Antenna and Installing and Grounding Outdoor Cellular Antennas.

3.2.1.8 GPS Antenna Connector

The 7705 SAR-Hm and 7705 SAR-Hmc have an integrated Global Navigation Satellite System (GNSS) SMA (female) connector that is used for an external GNSS/GPS antenna.

See GNSS Components for more information.

3.2.1.9 WLAN Connector

The 7705 SAR-Hm has a reverse polarity RP-SMA (female) WLAN connector that is used for a WiFi antenna that supports a 2.4 GHz/5 GHz, IEEE 802.11b/g/n WLAN interface.

See WLAN Components for more information. Installation of the WiFi antenna is described in Direct Mounting an Indoor WiFi Antenna and Installing and Grounding WLAN Outdoor Antennas.

3.2.1.10 Chassis Grounding

The 7705 SAR-Hm and 7705 SAR-Hmc have one designated grounding point on the front of the chassis. See Grounding the Chassis for more information.

© 2022-2023 Nokia. Nokia Confidential Information
Use subject to agreed restrictions on disclosure and use.

3.2.1.11 Power Supply Input

The 7705 SAR-Hm and 7705 SAR-Hmc have a single pluggable terminal connector on the front of the chassis. The terminals are the DC power feed points for a low-voltage ± 12/24 VDC power source on the 7705 SAR-Hm and a ± 12/24/48 VDC power source on the 7705 SAR-Hmc. See Preparing the DC Power Connections for requirements and information about how to prepare DC power cables.

3.2.1.12 High Voltage Power Supply Unit

The Nokia 35W High Voltage Power Supply (HV-PS35) (3HE11298AA) is an optional and separately orderable component that can be used for high-voltage DC or AC applications. The HV-PS35 has a small form factor and is designed to be installed adjacent to the 7705 SAR-Hm or 7705 SAR-Hmc. The HV-PS35 is factory-equipped with a DIN rail mounting racket. Figure 10 shows the HV-PS35.

Figure 10 **35W High Voltage Power Supply**

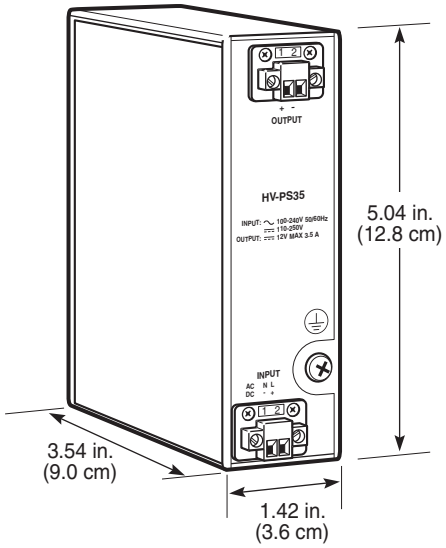

26450

The power input is a pluggable terminal block that supports power feeds of 90 to 264 VAC (50/60 Hz) or 88 to 300 VDC. The HV-PS35 power output is a pluggable terminal block that delivers a floating 24 VDC.

See HV-PS35 Specifications for technical data and High Voltage Power Supply Unit for installation instructions.

© 2022-2023 Nokia. Nokia Confidential Information
Use subject to agreed restrictions on disclosure and use.

3.2.1.13 Chassis Temperature Control

The 7705 SAR-Hm and 7705 SAR-Hmc chassis are passively cooled using fins for heat dissipation. Clearance requirements must be followed to ensure proper airflow around the chassis (see Chassis Clearance and Thermal Requirements).

System temperature is monitored. An Overheat alarm is raised if the system ambient operating temperature range is exceeded. The Overheat alarm is cleared when the system temperature falls within the specified operating range.

Warning: If an Overheat alarm occurs, take immediate action to cool the operating environment. If the system internal temperature continues to increase, system functions will be affected and can shut down, which may result in equipment damage.

3.2.1.14 Chassis Mounting Options

The 7705 SAR-Hm and 7705 SAR-Hmc chassis are designed to support indoor and outdoor mounting options. Outdoor installation requires the use of a cabinet or enclosure that provides weather protection in an extended temperature-controlled environment. The following mounting options are available.

Note: An Uninterruptible Power Supply (UPS) is available for powering the 7705 SAR-Hm and 7705 SAR-Hmc outdoors. Refer to the UPS vendor manual for information on how to connect the UPS unit.

- 7705 SAR-Hm and 7705 SAR-Hmc DIN rail mount

  The chassis is factory-equipped with a rear-mount DIN rail clip so that the chassis can be mounted on a horizontal 35 mm top-hat rail, as outlined in the EN 50022 standard. See DIN Rail-mounting the Chassis for more information.

  The HV-PS35 also comes factory-equipped with a DIN rail clip so that the PSU can be DIN rail-mounted adjacent to the chassis. See DIN Rail-mounting the HV-PS35 for mounting options and instructions.

- 7705 SAR-Hm and 7705 SAR-Hmc flat-surface mount

  The chassis can be installed on a flat surface, such as a table or desktop. 7705 SAR-Hm includes four rubber feet that are shipped with the chassis in a bag. The feet are self-adhesive and must be applied to the bottom of the chassis if this mounting option is used. Restrictions apply. See Mounting the Chassis on a Flat Surface.

© 2022-2023 Nokia. Nokia Confidential Information
Use subject to agreed restrictions on disclosure and use.

- 7705 SAR-Hm and 7705 SAR-Hmc rack mount

  The chassis can be rack-mounted using a DIN rail-to-rack mount adapter kit. These kits are available from third-party vendors.
- 7705 SAR-Hmc direct mount

  The 7705 SAR-Hmc can be mounted directly on any surface using the two screw holes on the front of the chassis. See 7705 SAR-Hmc Direct Mounting.
- 7705 Outdoor Enclosure

  See 7705 Outdoor Enclosure for more information.

© 2022-2023 Nokia. Nokia Confidential Information
Use subject to agreed restrictions on disclosure and use.

3.3 Cellular Components

This section describes the components that support cellular network connectivity for the 7705 SAR-Hm and 7705 SAR-Hmc, including the wireless module options for the 7705 SAR-Hm, and the Subscriber Identity Modules (SIMs) and antenna options.

3.3.1 Carrier Wireless Module Variants

The 7705 SAR-Hm and 7705 SAR-Hmc chassis variants are determined by the factory-installed carrier wireless module. Table 10 and Table 11 list the supported modules and their respective bands. See Cellular Radio Specifications for more information.

Table 10 **7705 SAR-Hm Carrier Wireless Module Variants**

Nokia Part Number	Description	Bands
3HE11600AA	7705 SAR-Hm 3G/LTE North America and Europe, the Middle East and Africa (EMEA)	**LTE** — B1-B5, B7, B12, B13, B20, B25, B26, B29, B30, B41 **WCDMA** — B1, B2, B3, B4, B5, B8
3HE11602AA	7705 SAR-Hm 3G/LTE Asia-Pacific (APAC) and the rest of the world (ROW)	**LTE** — B1, B3, B5, B7, B8, B18, B19, B21, B28, B38-B41 **WCDMA** — B1, B5, B6, B8, B9, B19

© 2022-2023 Nokia. Nokia Confidential Information
Use subject to agreed restrictions on disclosure and use.

Table 11 **7705 SAR-Hmc Carrier Wireless Module Variants**

Nokia Part Number	Description	Bands
3HE12472AA	7705 SAR-Hmc NA	**FDD-LTE** — B2, B4, B5, B8, B12 (with MFBI), B13, B14, B25, B26, B66 **TDD-LTE** — B41, B42, B43, B48
3HE12473AA	7705 SAR-Hmc NA Variant 2	**FDD-LTE** — B2 (with UMTS), B4 (with UMTS), B5 (with UMTS), B7, B12, B13, B14, B25, B26, B66, B71 **TDD-LTE** — B41, B42, B43, B48
3HE12474AA	7705 SAR-Hmc B31 (EMEA/CALA)	**FDD-LTE** — B3, B4, B7, B20, B28, B31, B72 **TDD-LTE** — B38, B42, B43
3HE12475AA	7705 SAR-Hmc B87 (EMEA/CALA)	**FDD-LTE** — B3, B4, B7, B20, B28, B87 **TDD-LTE** — B38, B42, B43
3HE12477AA	7705 SAR-Hmc EMEA/APAC	**FDD-LTE** — B1 (with UMTS), B3, B5 (with UMTS), B7, B8 (with UMTS), B20, B28, B32 **TDD-LTE** — B38, B40, B41, B42, B43

The 7705 SAR-Hm and 7705 SAR-Hmc have a GNSS receiver that provides location data to operators of the 7705 SAR-Hm or 7705 SAR-Hmc. See GNSS Components for more information.

3.3.2 SIMs

The 7705 SAR-Hm and 7705 SAR-Hmc have two SIM slots to support carrier wireless network connectivity. The system uses the 2FF Industrial Mini SIM format. The SIMs are installed behind a tamper-resistant screw-down panel at the rear of the chassis, facing the DIN rail. This location reduces the likelihood of tampering.

The following are the SIM requirements.

- Only one SIM in slot 1 is required to operate the cellular interface; Slot 2 is used for dual SIM operation.
- A valid SIM must be procured from a service provider before operating the cellular interface.
- To run the ADP process on the 7705 SAR-Hm and 7705 SAR-Hmc, the SIM must be inserted in slot 1 or the ADP process will not function.

© 2022-2023 Nokia. Nokia Confidential Information
Use subject to agreed restrictions on disclosure and use.

See Installing the SIM for installation instructions. Refer to the 7705 SAR-Hm Interface Configuration Guide for more information about SIMs and the configuration of the cellular interface.

3.3.3 Commercial Cellular Antennas

Table 12 lists the commercial cellular antennas that are available from and approved by Nokia for use with the 7705 SAR-Hm and 7705 SAR-Hmc.

Table 12 **Carrier Wireless Commercial Antenna Options**

Nokia Part Number	Description	Comments
3HE12343AA	Outdoor 2G/3G/4G omni-directional Antenna	Omni-directional antenna with mounting bracket kit. See Outdoor 2G/3G/4G Omni-directional Antenna.
3HE12344AA	Outdoor 2G/3G/4G directional Antenna	Directional antenna with mounting bracket kit. See Outdoor 2G/3G/4G Directional Antenna.
3HE12371AA	Indoor LTE omni-directional Antenna	See Indoor LTE Omni-directional Antenna.

3.3.3.1 Outdoor 2G/3G/4G Omni-directional Antenna

The Outdoor 2G/3G/4G omni-directional Antenna (3HE12343AA) is a MIMO omni-directional LTE antenna that operates at two frequency ranges: 695 to 960 MHz and 1700 to 2700 MHz with gain of 2 dBi and 3dBi respectively. Impedance is 50 Ω. The antenna is equipped with two N-Type (female) connectors.

Installation instructions, a mounting bracket, U-bolts, and fastening hardware for mounting the antenna on a mast up to 2.5 in. (63.5 mm) O.D. are shipped with the antenna. See Outdoor 2G/3G/LTE Omni-directional Antenna Specifications and Outdoor 2G/3G/4G Omni-directional Antenna Installation Overview for more information.

© 2022-2023 Nokia. Nokia Confidential Information
Use subject to agreed restrictions on disclosure and use.

3.3.3.2 Outdoor 2G/3G/4G Directional Antenna

The Outdoor 2G/3G/4G directional Antenna (3HE12344AA) features a frequency range of 698 to 960 MHz and 1710 to 2700 MHz and nominal gain of 6 dBi at 698 to 960 MHz and 8 dBi at 1710 to 2700 MHz. The impedance is 50 Ω. See Outdoor 2G/3G/LTE Directional Antenna Specifications and Outdoor 2G/3G/4G Directional Antenna Installation Overview for more information.

On the back of the antenna are two N-Type (female) connectors. The antenna is waterproof, vented, and rated at IP67 for indoor or outdoor use.

The antenna is shipped with a heavy-duty articulating mounting bracket that supports horizontal polarization, vertical polarization, or a 45˚ diagonal slant. The bracket can be fixed to a mast measuring 1.63 to 2.3 in. (41.4 to 58.4 mm) O.D. using pipe clamps. Pipe clamps and installation instructions are included with the antenna.

3.3.3.3 Indoor LTE Omni-directional Antenna

The indoor LTE omni-directional Antenna (3HE12371AA) is a dipole terminal antenna with a hinged SMA (male) connector suitable for direct mount on the 7705 SAR-Hm in an indoor facility.

The antenna operates in a dual frequency of 698 to 960 MHz and 1710 to 2690 MHz, a nominal impedance of 50 Ω. See Indoor LTE Omni-directional Antenna Specifications and Direct-mounting the Indoor LTE Omni-directional Antenna for more information.

3.3.3.4 LTE Surge Protectors

The LTE surge protectors are designed to offer sufficient protection against lightning surges and are highly recommended when installing outdoor antennas.

Nokia offers three variants, which are N-Type (female to female) for indoor to outdoor applications, and N-Type (female to male) or 4.3-10 (male to female) for 7705 Outdoor Enclosure applications. The frequency range is from 698 MHz to 2700 MHz.

© 2022-2023 Nokia. Nokia Confidential Information
Use subject to agreed restrictions on disclosure and use.

Note: Nokia does not offer LTE surge protectors for the following frequency bands at this time:

- Band 31/72/87 (410 to 470 MHz)
- Band 42/43/48 (3400 to 3800 MHz)

© 2022-2023 Nokia. Nokia Confidential Information
Use subject to agreed restrictions on disclosure and use.

3.4 GNSS Components

All 7705 SAR-Hm and 7705 SAR-Hmc variants have a GNSS receiver. Table 13 lists the chassis models and the supported GNSS systems and frequencies.

Refer to the GNSS Installation Guide, located in the Nokia Documentation Center, for more information on antenna offerings, cable installation kits, and installation.

Table 13 **Carrier Wireless Module Variants and Supported GNSS Systems and Frequencies**

Nokia Part Number	Carrier Wireless Module Variant	Supported GNSS System and Frequency
3HE11600AA	7705 SAR-Hm 3G/LTE North America and EMEA	• GPS (1575.42 MHz) • GLONASS (1602 MHz)
3HE11602AA	7705 SAR-Hm 3G/LTE APAC and ROW	
3HE12472AA	7705 SAR-Hmc NA	
3HE12473AA	7705 SAR-Hmc NA Variant 2	
3HE12474AA	7705 SAR-Hmc B31 (EMEA/CALA)	
3HE12475AA	7705 SAR-Hmc B87 (EMEA/CALA)	
3HE12477AA	7705 SAR-Hmc EMEA/APAC	

© 2022-2023 Nokia. Nokia Confidential Information
Use subject to agreed restrictions on disclosure and use.

3.5 WLAN Components

The following antennas can be connected to the WLAN port on the 7705 SAR-Hm.

Note: Nokia does not offer WLAN surge protectors at this time.

3.5.1 Outdoor WiFi Antennas

Nokia supports WiFi omni-directional antennas, WiFi directional antennas, and vehicle mount LTE/WiFi/GNSS outdoor antennas. For more information about these antennas, see Installing and Grounding WLAN Outdoor Antennas.

3.5.2 Indoor WiFi Antenna

The Indoor WiFi omni-directional Antenna (3HE12345AA) is a dipole antenna with an RP-SMA (male) connector that can be mounted directly on the 7705 SAR-Hm chassis. The antenna is rated at IP65 and is suitable for indoor use.

The antenna supports frequency ranges of 2.4 to 2.5 GHz and 5.1 to 5.85 GHz, with a peak gain at 2.37 dBi and 2.93 dBi respectively. The antenna has a nominal impedance of 50 Ω. See Indoor WiFi Omni-directional Antenna Specifications and Direct Mounting an Indoor WiFi Antenna for more information.

© 2022-2023 Nokia. Nokia Confidential Information
Use subject to agreed restrictions on disclosure and use.

3.6 Citizens Broadband Radio Service

The cellular interface on the 7705 SAR-Hmc NA (3HE12472AA) and the 7705 SAR-Hmc NA variant 2 (3HE12473AA) supports the Citizens Broadband Radio Service (CBRS) B48 spectrum.

When operating in the CBRS spectrum, the 7705 SAR-Hmc is classified as either an end-user device (EUD) or a Citizens Broadband Service Radio Device (CBSD) Category A or B, depending on the maximum effective isotropic radiated power (EIRP).

Refer to the 7705 SAR-Hm and SAR-Hmc Interface Configuration Guide for information about the settings and functionality.

© 2022-2023 Nokia. Nokia Confidential Information
Use subject to agreed restrictions on disclosure and use.

3.7 ADP-Hm Prerequisites and Pre-staging Considerations

In order for ADP-Hm to function, a number of prerequisites must be completed in advance of initial power-up of a 7705 SAR-Hm and 7705 SAR-Hmc. Refer to the 7705 SAR-Hm Main Configuration Guide for a list of prerequisites for ADP-Hm.

Consideration must be given to when and where initial power-up of the node occurs. ADP-Hm supports two installation options that can be configured on the NSP NFM-P before the initial boot-up of the 7705 SAR-Hm or 7705 SAR-Hmc. The options are:

a. The 7705 SAR-Hm or 7705 SAR-Hmc can be booted for the first time at a pre-staging facility, where it is initialized, secured, partially configured, and then shut down. The router is then shipped to the installation site, installed, and booted again, at which time the configuration process is completed.
b. The 7705 SAR-Hm or 7705 SAR-Hmc can be installed on site, where it is booted for the first time, initialized, and configured.

© 2022-2023 Nokia. Nokia Confidential Information
Use subject to agreed restrictions on disclosure and use.

3.8 Chassis Installation Process

3.8.1 Preparation

Step 1. Review all regulations. See Mandatory Regulations.

Step 2. Assess and prepare the site and observe all safety warnings. See Site Preparation.

3.8.2 Pre-staging

This section applies only if you are using ADP-Hm to initialize and commission the 7705 SAR-Hm or 7705 SAR-Hmc in a pre-staging facility.

Note: The instructions in this guide assume that the prerequisites for the instantiation of ADP-Hm have been completed. Refer to the 7705 SAR-Hm and 7705 SAR-Hmc Main Configuration Guide for more information.

To pre-stage the 7705 SAR-Hm or 7705 SAR-Hmc chassis, perform the following steps in order:

Step 1. Unpack the chassis at the pre-staging facility. See Unpacking the Chassis.

Step 2. Install the SIM. See Installing the SIM.

Step 3. Install the chassis on a table top. See Mounting the Chassis on a Flat Surface.

Step 4. Ground the chassis. See Grounding the Chassis.

Step 5. Connect the antenna and network cables to the chassis. See Making Indoor Antenna Connections to the 7705 SAR-Hm and Making Connections to the RJ-45 Ports.

Step 6. Prepare the DC input power cables and connections to the DC power feed. See Preparing the DC Power Connections. If the HV-PS35 is used, see High Voltage Power Supply Unit.

Step 7. Power up the system and monitor ADP-Hm. See Powering Up and Initializing.

Step 8. Shut down all power to the router.

Step 9. Remove the power cables from the router.

Step 10. Remove the antennas and cabling from the router. Do not remove the SIM.

© 2022-2023 Nokia. Nokia Confidential Information
Use subject to agreed restrictions on disclosure and use.

Step 11. Repackage the router and ship it to the installation site.

Step 12. Perform On-site Installation.

3.8.3 On-site Installation

This section applies in any the following installation scenarios:

- you are using ADP-Hm and have performed the pre-staging steps
- you are using ADP-Hm and are not pre-staging the router
- you are not using ADP-Hm

To install the 7705 SAR-Hm or 7705 SAR-Hmc chassis on site, perform the following steps in order:

Step 1. Assess and prepare the site. See Site Preparation.

Step 2. Unpack the chassis. See Unpacking the Chassis.

Step 3. Install the SIM. This step is not required if the router has been pre-staged. See Pre-staging in this chapter. See also Installing the SIM.

Step 4. Install the chassis according to one of the methods described in Installing and Grounding the Chassis.

Step 5. Ground the chassis. See Grounding the Chassis.

Step 6. Install the Main, Diversity, WiFi, and GPS antennas. See Overview or Installing and Grounding Outdoor Antennas.

Step 7. Connect the coaxial antenna cables and the network cables to the chassis. See Making Outdoor Antenna and Cable Connections and Making Connections to the RJ-45 Ports.

Step 8. Prepare the DC input power cables and connections to the DC power feed. See Preparing the DC Power Connections. If the HV-PS35 is used, see High Voltage Power Supply Unit.

Step 9. Power up the system. See Powering Up and Initializing.

© 2022-2023 Nokia. Nokia Confidential Information
Use subject to agreed restrictions on disclosure and use.

4 Site Preparation

4.1 In This Chapter

This chapter provides information about preparing a site to install the 7705 SAR-Hm or 7705 SAR-Hmc. The topics include:

- Warnings and Notes
- 7705 SAR-Hm and 7705 SAR-Hmc System Specifications
- HV-PS35 Specifications
- Installation Locations
- Cellular Radio Specifications
- Commercial Antenna Specifications
- Generic Requirements for Enclosures

For detailed information about site preparation guidelines and equipment protection, refer to the Best Practices for Improving Equipment Protection and Longevity guide, located in the Nokia Documentation Center.

© 2022-2023 Nokia. Nokia Confidential Information
Use subject to agreed restrictions on disclosure and use.

4.2 Warnings and Notes

Danger:

- Also observe the Dangers and Warnings in the to Mandatory Regulations chapter.
- The 7705 SAR-Hm and 7705 SAR-Hmc chassis must be properly grounded. Chassis ground cables are not included. Lack of proper grounding (earthing) of the equipment may result in a safety hazard and excessive electromagnetic emissions.
- The 7705 SAR-Hm, 7705 SAR-Hmc, and HV-PS35 need a disconnect device on each DC power feed (such as an external circuit breaker, switch, or fuse) to disconnect power from the units. For a high-voltage DC application, the fuse or circuit breaker must be approved for the applicable DC voltage. For high-voltage AC power, an IEC320 AC cord must be used as the disconnect device.
- Before connecting power cables to the chassis or before servicing, ensure that all power is OFF from the DC circuit or AC power source. To switch the DC power OFF, locate the circuit breaker on the panel board that services the DC circuit and switch the circuit breaker to the OFF position. For extra safety, tape the handle of the circuit breaker in the OFF position. To switch the AC power off, unplug the AC cord from the AC outlet.
- Be aware of all operating equipment in the area of the chassis installation. Make safe any exposed power equipment, such as breaker panel bus bars or power connectors on any nearby equipment. Either shut off the power, if possible, or install safety guards or mats over exposed power points and cables. Tools used for power connections should be insulated in an appropriate manner for the task.

© 2022-2023 Nokia. Nokia Confidential Information
Use subject to agreed restrictions on disclosure and use.

Warning:

- To properly transport and relocate a 7705 SAR-Hm, 7705 SAR-Hmc, or HV-PS35, do the following:
  - disconnect power to the unit by opening the disconnect devices
  - detach all cables from the unit; remove the protective ground connection last
  - remove the unit from the DIN rail, rack, or enclosure
  - repackage the unit in its original packaging or an appropriately sized shipping container for relocation
- The 7705 SAR-Hm or 7705 SAR-Hmc should be installed in restricted access areas, such as a dedicated equipment room or an equipment closet, in accordance with Articles 110-16, 110-17, and 110-18 of the National Electric Code ANSI/ NFPA 70.
- The 7705 SAR-Hm, 7705 SAR-Hmc, and HV-PS35 include a chassis ground stud on the front of the chassis. The chassis ground must be connected to the building ground, using either a direct connection or a ground bus.
- The screw and washer used to secure the chassis ground wire to the chassis ground point must only be used for that purpose.
- Electrostatic discharge (ESD) damage can occur if the 7705 SAR-Hm, 7705 SAR-Hmc, or HV-PS35 is mishandled. Always wear an ESD-preventive wrist or ankle strap and always connect an ESD strap to a nearby ground point that is connected to the site grounding point when working on the 7705 SAR-Hm or 7705 SAR-Hmc. A typical ground point is the ground connection point on the front of the chassis (but only after the chassis is installed and the chassis ground wire has been connected).
- When mounting the chassis, follow all requirements described in Chassis Clearance and Thermal Requirements.
- Install the chassis on a DIN rail or desktop before installing cabling.
- Failure to comply with the instructions as outlined in Installation Locations and Chassis Clearance and Thermal Requirements could result in thermal failure.
- Do not install equipment that appears to be damaged.

Note: Prepare the site before installing the 7705 SAR-Hm, 7705 SAR-Hmc, or HV-PS35. Plan the unit placement near the power sources and network interface connections.

© 2022-2023 Nokia. Nokia Confidential Information
Use subject to agreed restrictions on disclosure and use.

4.3 7705 SAR-Hm and 7705 SAR-Hmc System Specifications

4.3.1 Physical Specifications

Table 14 **7705 SAR-Hm and 7705 SAR-Hmc Chassis Specifications**

Parameter	Description
7705 SAR-Hm Dimensions (H x W x D) [1] 7705 SAR-Hmc Dimensions (H x W x D) [1]	6 x 2.65 x 5.5 in. (15.24 x 6.73 x 13.97 cm) 5.5 x 1.5 x 5.0 in. (13.97 x 3.81 x 12.7 cm)
7705 SAR-Hm Chassis weight 7705 SAR-Hmc Chassis weight 7705 Outdoor Enclosure weight (all variants) Pole wall brackets (2) weight (3HE12312AA)	3.22 lb (1.46 kg) 1.4 lb (0.635 kg) 5.07 lb (2.3 kg) 3.09 lb (1.4 kg)
Mounting options	One of the following methods: • Vertically on a 35 mm horizontal DIN rail using the attached DIN clip • Horizontally on a flat surface, such as a table or desktop [2] • Direct mount (7705 SAR-Hmc only) • In a 7705 Outdoor Enclosure (sold separately)

Notes:

1. The dimensions are for the chassis viewed vertically. Dimensions do not include the mounting bracket or cabling requirements.
2. The high operating temperature is derated to 122°F (50°C) for the 7705 SAR-Hm only. Refer to Chassis Clearance and Thermal Requirements for minimum clearance requirements for both the 7705 SAR-Hm and 7705 SAR-Hmc.

© 2022-2023 Nokia. Nokia Confidential Information
Use subject to agreed restrictions on disclosure and use.

4.3.2 Environmental Specifications

Table 15 **7705 SAR-Hm and 7705 SAR-Hmc Chassis Environmental Specifications**

Parameter	Description
Shipping and storage temperature	–40ºF to 185ºF (–40°C to 85ºC)
Normal operating temperature in a still air environment [1]	–40ºF to 149ºF (–40°C to 65ºC)
Cold start temperature	–40ºF (–40ºC)
Normal relative humidity	5 to 95% (non-condensing)
Operating altitude	Up to 13 123 ft (4000 m) above sea level [2]
Earthquake	Suitable for high-risk areas (Zone 4/California, for short-duration disturbance) [3]
Pollution degree [4]	2
Enclosure classification [5]	IP40
Rated voltage (DC)	+/–12 VDC +/–24 VDC +/–48 VDC (7705 SAR-Hmc only)
Operating voltage range (DC)	+/–10 VDC to 28 VDC (7705 SAR-Hm) +/–9 VDC to 60 VDC (7705 SAR-Hmc)

Notes:

1. For the 7705 SAR-Hm only, the high operating temperature is derated to 122°F (50°C) when mounted horizontally on a flat surface, such as a table or desktop.
2. High operating temperature is derated when installing a system above 5905.5 ft (1800 m). The derating factor is 1.8°F per 1000 ft (1°C per 305 m).
3. Not applicable to DIN rail-mounted hardware.
4. Pollution degree is as defined in IEC 61850-3 ed. 2.
5. Enclosure classification is as defined in IEC 60529.

© 2022-2023 Nokia. Nokia Confidential Information
Use subject to agreed restrictions on disclosure and use.

4.3.3 Radio Specifications

Table 16 **7705 SAR-Hm and 7705 SAR-Hmc LTE Port Specifications**

Parameters	7705 SAR-Hm	7705 SAR-Hmc (3HE12472AA, 3HE12474AA, 3HE12475AA)	7705 SAR-Hmc (3HE12473AA, (3HE12477AA)
Conducted transmitter power	+23 dBm (+1/−2.5 dB)	+23 dBm (+2/−2.5 dB)	+23 dBm (+1/−2.5 dB)
Conducted receiver sensitivity (BW@ 10 MHz)	−97.0 dBm (typical) (Main and Diversity)	−97.0 dBm (typical) (Main and Diversity)	−97.0 dBm (typical) (Main and Diversity)
Connector type	SMA	SMA	SMA

Table 17 **7705 SAR-Hm and 7705 SAR-Hmc WiFi Port Specifications**

Parameters	7705 SAR-Hm	7705 SAR-Hmc
Conducted transmitter power (BW @ 20MHz)	+18 dBm ± 2 dB (2.4 GHz) +12 dBm ± 2 dB (5 GHz)	WLAN is not supported
Conducted receiver sensitivity (BW@ 20 MHz)	−91.5 dBm (6 Mbps OFDM; 2.4 GHz) −84.0 dBm (24 Mbps OFDM; 2.4 GHz) −74.5 dBm (54 Mbps OFDM; 2.4 GHz) −90.0 dBm (6 Mbps OFDM; 5 GHz) −83.5 dBm (24 Mbps OFDM; 5 GHz) −74.0 dBm (54 Mbps OFDM; 5 GHz)	
Connector type	RP-SMA	

© 2022-2023 Nokia. Nokia Confidential Information
Use subject to agreed restrictions on disclosure and use.

Table 18 **7705 SAR-Hm and 7705 SAR-Hmc GNSS Port Specifications**

Parameters	**7705 SAR-Hm**	**7705 SAR-Hmc (3HE12472AA, 3HE12474AA, 3HE12475AA)**	**7705 SAR-Hmc (3HE12473AA, (3HE12477AA)**
Voltage source provided by GNSS port	3.0 to 3.25 VDC (100 mA maximum @ 3 VDC)	2.3 to 3.0 VDC range 2.3 VDC (50 mA max) 2.5 VDC (40 mA max) 2.7 VDC (30 mA max) 2.9 VDC (20 mA max) 3 VDC (15 mA max)	3.05 to 3.25 VDC (100 mA maximum @ 3.05 VDC)
Supported bands	GPS (1575.42 MHz) GLONASS (1602 MHz)	GPS (1575.42 MHz) GLONASS (1602 MHz)	GPS (1575.42 MHz) GLONASS (1602 MHz)
Acquisition time	Cold start: 32 s (measured with signal strength of −135 dBm)	Data not available at this time	Cold start: 32 s (measured with signal strength of −135 dBm)
Accuracy	Horizontal: < 2 m (50%); < 5 m (90%)	Data not available at this time	Horizontal: < 5 m (50%); < 9 m (90%)
Sensitivity	Tracking:−160 dBm Acquisition (assisted): −158 dBm Acquisition (standalone): −145 dBm [1]	Data not available at this time	Tracking:−160 dBm Acquisition (assisted): −158 dBm Acquisition (standalone): −145 dBm [1]
Connector type	SMA	SMA	SMA

Note:

1. Lowest GNSS signal level for which the device can still detect an in-view satellite 50% of the time.

© 2022-2023 Nokia. Nokia Confidential Information
Use subject to agreed restrictions on disclosure and use.

4.3.4 Chassis Power Consumption

Note: The power consumption estimates shown in Table 19 and Table 20 are based on the total power dissipated by the chassis only. Table 21 and Table 22 show the maximum heat dissipation.

Table 19 **7705 SAR-Hm Chassis Power Consumption**

Description	Average Power	Maximum Power
Chassis (with LTE and WLAN ports active)	16 W	18.4 W

Table 20 **7705 SAR-Hmc Chassis Power Consumption**

Description	Average Power	Maximum Power
Chassis (with two ports active)	7 W	8 W

Table 21 **7705 SAR-Hm Heat Dissipation**

Power Consumption (W) (Worst Case)	Maximum Heat Dissipation
18.4 W	63 BTU/hr [1]

Table 22 **7705 SAR-Hmc Heat Dissipation**

Power Consumption (W) (Worst Case)	Maximum Heat Dissipation
8 W	27 BTU/hr [1]

Note:

1. BTU/hr = watts × 3.41214

4.3.5 CBN and IBN Grounding Requirements

The chassis can be installed in both Common Bonding Networks (CBN) and Isolated Bonding Networks (IBN) with a floating battery return; that is, the battery inputs are floating relative to digital or chassis ground.

© 2022-2023 Nokia. Nokia Confidential Information
Use subject to agreed restrictions on disclosure and use.

For information about grounding the chassis and connecting the DC supply, see Installing and Grounding the Chassis.

4.3.6 Storage

To store an uninstalled chassis, replace the port dust caps, repackage the chassis in its original packaging or an appropriately sized container, and keep it in a dry, dust-free, temperature-controlled environment. Table 23 lists the storage specifications.

Table 23 **Chassis Storage Specifications**

Parameter	Description
Storage and shipping temperature	From –40ºF to 185ºF (–40°C to 85ºC)
Relative humidity	5 to 95% (non-condensing)

4.3.7 Compliance

See Standards and Protocol Support for more compliance information.

4.3.8 SIM Specifications

Table 24 **2FF Industrial Mini SIM Specifications**

Parameter	Description
Form factor	2FF
Size (W x H)	0.59 x 0.98 in. (1.5 x 2.5 cm)
Temperature rating	–40ºF to 221ºF (–40ºC to 105ºC)
Lifespan	10 years

© 2022-2023 Nokia. Nokia Confidential Information
Use subject to agreed restrictions on disclosure and use.

4.4 HV-PS35 Specifications

This section describes the specifications for the optional HV-PS35.

Note: Observe the Dangers and Warnings described in Safety Warnings / Avertissements de Sécurité that apply to the HV-PS35.

4.4.1 Physical Specifications

Table 25 **HV-PS35 Physical Specifications**

Parameter	Description
Dimensions (H x W x D)	5.04 x 1.42 x 3.54 in. (12.8 x 3.6 x 9.0 cm)
Chassis weight	1.73 lb (0.786 kg)
Mounting options	One of the following methods: • Vertically on a 35 mm horizontal DIN rail using the attached DIN clip • Horizontally on a flat surface, such as a table or desktop • In a 7705 Outdoor Enclosure (sold separately)

4.4.2 Environmental Specifications

Table 26 **HV-PS35 Environmental Specifications**

Parameter	Description
Normal operating temperature	–40ºF to 149ºF (–40ºC to 65ºC) (sealed or vented environment)
Cold start temperature	–40ºF (–40ºC)
Relative humidity	5 to 95% (non-condensing)
Cooling	Convection
Operating altitude	Up to 13 123 ft (4000 m) above sea level [1]

© 2022-2023 Nokia. Nokia Confidential Information
Use subject to agreed restrictions on disclosure and use.

Table 26 **HV-PS35 Environmental Specifications (Continued)**

Parameter	Description
Earthquake	Suitable for high-risk areas (Zone 4/California, for short-duration disturbance) [2]
Enclosure classification [3]	IP40
Operating voltage range (HV DC)	88 VDC to 300 VDC
Operating voltage range (AC)	90 VAC to 264 VAC
Input current	0.6 A maximum at 90 VAC 0.3 A maximum at 220 VAC 0.6 A maximum at 88 VDC
Input frequency	47 Hz to 63 Hz
Rated output voltage (DC)	24 VDC
Maximum output current	1.46 A

Notes:

1. High operating temperature is derated when installing a system above 5905.5 ft (1800 m). The derating factor is 1.8°F per 1000 ft (1°C per 305 m).
2. Not applicable to DIN rail-mounted hardware.
3. Enclosure classification is as defined in IEC 60529.

4.4.3 HV-PS35 Power Consumption

Table 27 lists the power consumption for the HV-PS35.

Table 27 **HV-PS35 Power Consumption**

Description	Rated Output Power	Typical Power Efficiency (%)
HV-PS35	35 W	90%

© 2022-2023 Nokia. Nokia Confidential Information
Use subject to agreed restrictions on disclosure and use.

4.4.4 Power and Cabling Requirements

4.4.4.1 High-Voltage DC Power Requirements

- A DC-rated circuit breaker or fuse with recommended current rating of 15 A (maximum) must be provided on the hot side of the supply line. A ganged breaker that simultaneously disconnects both sides of the supply line is also acceptable. The circuit breaker or fuse must be located conveniently close to the equipment. This is intended as the disconnect device.
- The minimum size/AWG power conductor for the DC input connections must be based on the application, and on the local codes, practices, and regulations applicable for the region.
- All power cables used on the HV-PS35 must meet local safety codes.

4.4.4.2 AC Power Requirements

- A standard 120 or 240 VAC outlet is required.
- All power cords used on the HV-PS35 must meet local safety codes.

4.4.5 HV-PS35 Clearance Requirements

Warning: Failure to comply with the location requirements outlined in this section may impede proper airflow, which may result in equipment failure due to overheating.

- DIN-rail installation

  Allow at least 1 in. (2.5 cm) clearance around the top, bottom, front, and sides of the HV-PS35 to ensure proper circulation.
- Flat-surface installation (typically in an office environment on a desktop or table)

  Allow at least 1 in. (2.5 cm) of space on the front, sides, rear, and top of the HV-PS35 for proper air circulation.
- Enclosure or cabinet installation

  For the 7705 Outdoor Enclosure, the HV-PS35 installation is fixed; no additional clearance is required.

© 2022-2023 Nokia. Nokia Confidential Information
Use subject to agreed restrictions on disclosure and use.

If the HV-PS35 is installed in a third-party cabinet or enclosure, allow at least 1 in. (2.5 cm) clearance around the top, bottom, front and sides to ensure proper airflow.

4.4.6 Storage

To store an uninstalled HV-PS35, repackage it in its original packaging or an appropriately sized container and keep it in a dry, dust-free, temperature-controlled environment.

Table 28 **HV-PS35 Storage Specifications**

Parameter	Description
Storage and shipping temperature	From –40ºF to 185ºF (–40°C to 85ºC)
Relative humidity	5 to 95% (non-condensing)

4.4.7 Compliance

See Standards and Protocol Support for compliance information for the HV-PS35.

© 2022-2023 Nokia. Nokia Confidential Information
Use subject to agreed restrictions on disclosure and use.

4.5 Installation Locations

Warning:

- The 7705 SAR-Hm, 7705 SAR-Hmc, and HV-PS35 must not be installed in the same compartment as the batteries, which can give off gas. Out-gassing from batteries not only could have corrosive effects, but could also result in an explosion. If batteries are located in the same cabinet, the battery compartment must be completely sealed off from all other equipment and must be properly ventilated for safety as required by product safety standards and local codes and statutes.
- If using an equipment rack, follow the equipment rack manufacturer's instructions for proper rack installation.
- Failure to comply with the requirements and the location requirements outlined in this section and Chassis Clearance and Thermal Requirements may impede proper airflow and may result in the system overheating.

Note: The 7705 SAR-Hm, 7705 SAR-Hmc, and HV-PS35 must be installed in restricted access areas, such as a dedicated equipment room or equipment closet, in accordance with Articles 110-16, 110-17, and 110-18 of the National Electric Code ANSI/NFPA 70.

The chassis is intended to be installed outdoors within power distribution huts, or cabinets and enclosures that provide weather protection in an extended temperature-controlled environment. The chassis is not intended for direct outdoor installation. The chassis is designed to work in an environment where protection is provided from ingress of contaminants including conductive pollution, mold growth, precipitation, water or other liquids, volatile or corrosive chemicals (for example, salt-laden air), hygroscopic dust, insects, pests, or vermin entering the product.

When installed in an outside plant, such as a hut, cabinet, or outside plant enclosure, the chassis must be installed in an environment where, except during installation and servicing, the compartment is sealed and any air exchange is properly filtered.

Typically, cabinets that comply with Telcordia GR-487, Generic Requirements for Electronic Equipment Cabinets, provide this level of protection. These cabinets are sealed and are provided either with air-to-air heat exchangers or with air-conditioning and/or heaters as required for the local climate. If the cabinet is the type that allows outside air to ventilate the cabinet, it must have Hydrophobic Membrane filters, at the air inlet and air exit, with all other parts properly sealed against outside contaminants and moisture. Dust caps are provided and must remain in place for unused ports.

The humidity levels in the cabinet must be controlled to ensure a relative humidity level between 5% and 95% (non-condensing). The dew point threshold in the cabinet must not be crossed.

© 2022-2023 Nokia. Nokia Confidential Information
Use subject to agreed restrictions on disclosure and use.

Dust caps are provided for the radio, GPS, and WLAN SMA ports. Dust caps must remain in place for unused ports.

The 7705 SAR-Hm, 7705 SAR-Hmc, and the HV-PS35 support extended temperature and cold start operation as specified in Table 15.

If closed cabinets are to be used, the local ambient temperature (measured within 1 in. (2.5 cm) around the unit) must not exceed the temperatures specified in Table 15. Furthermore, the cabinets must not cause the shelf inlet bulk air temperatures to rise above those defined in Chassis Clearance and Thermal Requirements under worst-case environmental conditions, including any preheating of the cabinet air by other equipment.

The minimum clearance as stated in Chassis Clearance and Thermal Requirements must be maintained.

4.5.1 Chassis Clearance and Thermal Requirements

Warning: Failure to comply with the location requirements outlined in this section may impede proper airflow, which may result in equipment failure due to overheating.

- DIN-rail installation

  Allow at least 1 in. (2.5 cm) clearance around the top and bottom. No side clearance is required to adjacent passive equipment and/or walls; ½ in. (1.25 cm) clearance is required to active heat dissipating equipment. When installed, the air temperature measured at the bottom of the 7705 SAR-Hm chassis must not exceed 149°F (65°C) for sealed or vented environments or 158°F (70°C) with a minimum air movement of 0.5 m/s.
- 7705 SAR-Hmc vertical direct-mount installation

  The same requirements apply as for a DIN-rail installation.
- 7705 SAR-Hmc horizontal direct-mount installation

  Allow at least 1 in. (2.5 cm) clearance around the top and ½ in. (1.25 cm) clearance at the sides and back.
- Flat-surface installation

  Allow at least 1 in. (2.5 cm) of space on the front, sides, rear, and top of the chassis for proper air circulation.

  If the 7705 SAR-Hm is installed horizontally, such as on a table or desktop, the ambient temperature must not exceed −40 to 122ºF (−40C to 50ºC). For the 7705 SAR-Hmc, there is no derating.

© 2022-2023 Nokia. Nokia Confidential Information
Use subject to agreed restrictions on disclosure and use.

- Enclosure or cabinet installation

  For the 7705 Outdoor Enclosure, the chassis installation is fixed; no additional clearance is required.

  If the chassis is installed in a third-party cabinet or enclosure, the same requirements apply as for a DIN-rail installation. If the enclosure contains other heat-dissipating equipment, care must be taken to ensure that the air temperature measured at the bottom of the chassis does not exceed 149°F (65°C) with a minimum air movement of 0.5 m/s with all active equipment operational, including the 7705 SAR-Hm and 7705 SAR-Hmc.

© 2022-2023 Nokia. Nokia Confidential Information
Use subject to agreed restrictions on disclosure and use.

4.6 Cellular Radio Specifications

Table 29 lists the cellular radio specifications by region for the 7705 SAR-Hm variants.

Table 29 **7705 SAR-Hm Cellular Radio Specifications**

Region	**Americas and EMEA**	**APAC and ROW**
7705 SAR-Hm Variant Part Number	**3HE11600AA**	**3HE11602AA**
Air interface	LTE-FDD, LTE-TDD, HSPA+	LTE-FDD, LTE-TDD, HSPA+, TD-SCDMA
4G LTE bands (in MHz)	**FDD Bands** B1: 1920 to 1980 Tx; 2110 to 2170 Rx B2: 1850 to 1910 Tx; 1930 to 1990 Rx B3: 1710 to 1785 Tx; 1805 to 1880 Rx B4: AWS 1700/2100 B5: 824 to 849 Tx; 869 to 894 Rx B7: 2500 to 2570 Tx; 2620 to 2690 Rx B8: 880 to 915 Tx; 925 to 960 Rx B12: 699 to 716 Tx; 729 to 746 Rx	**FDD Bands** B1: 1920 to 1980 Tx; 2110 to 2170 Rx B3: 1710 to 1785 Tx; 1805 to 1880 Rx B5: 824 to 849 Tx; 869 to 894 Rx B7: 2500 to 2570 Tx; 2620 to 2690 Rx B8: 880 to 915 Tx; 925 to 960 Rx B18: 815 to 830 Tx; 860 to 875 Rx B19: 830 to 845 Tx; 875 to 890 Rx B21: 1448 to 1463 Tx; 1496 to 1511 Rx B28: 703 to 748 Tx; 758 to 803 Rx

© 2022-2023 Nokia. Nokia Confidential Information
Use subject to agreed restrictions on disclosure and use.

Table 29 **7705 SAR-Hm Cellular Radio Specifications (Continued)**

Region	**Americas and EMEA**	**APAC and ROW**
7705 SAR-Hm Variant Part Number	**3HE11600AA**	**3HE11602AA**
4G LTE bands (in MHz) (continued)	B13: 777 to 787 Tx; 746 to 756 Rx B25: 1850 to 1915 Tx; 1930 to 1995 Rx B26: 814 to 849 Tx; 859 to 894 Rx B29: n/a Tx; 717 to 728 Rx B30: 2305 to 2315 Tx; 2350 to 2360 Rx **TDD Bands** B41: 2496 to 2690	**TDD Bands** B38: 2570 to 2620 B39: 1880 to 1920 B40: 2300 to 2400 B41: 2496 to 2690
3G UMTS (WCDMA)/ HSPA+ bands	B1: 1920 to 1980 Tx; 2110 to 2170 Rx B2: 1850 to 1910 Tx; 1930 to 1990 Rx B3: 1710 to 1785 Tx; 1805 to 1880 Rx B4: AWS 1700/2100 B5: 824 to 849 Tx; 869 to 894 Rx B8: 880 to 915 Tx; 925 to 960 Rx	B1: 1920 to 1980 Tx; 2110 to 2170 Rx B5: 824 to 849 Tx; 869 to 894 Rx B6: 830 to 840 Tx; 875 to 885 Rx B8: 880 to 915 Tx; 925 to 960 Rx B9: 1750 to 1785 Tx; 1845 to 1880 Rx B19: 830 to 845 Tx; 875 to 890 Rx

© 2022-2023 Nokia. Nokia Confidential Information
Use subject to agreed restrictions on disclosure and use.

Table 29 **7705 SAR-Hm Cellular Radio Specifications (Continued)**

Region	**Americas and EMEA**	**APAC and ROW**
7705 SAR-Hm Variant Part Number	**3HE11600AA**	**3HE11602AA**
TD-SCDMA	Not supported	B39
LTE user equipment category	6	6

© 2022-2023 Nokia. Nokia Confidential Information
Use subject to agreed restrictions on disclosure and use.

Table 30 lists the cellular radio specifications by region for the 7705 SAR-Hmc variants.

Table 30 **7705 SAR-Hmc Cellular Radio Specifications**

Region	**North America**		**EMEA/CALA B31**	**EMEA/CALA B87**	**EMEA/APAC**
7705 SAR-Hmc Variant Part Number	**3HE12472AA**	**3HE12473AA**	**3HE12474AA**	**3HE12475AA**	**3HE12477AA**
Air interface	LTE-FDD, LTE-TDD	LTE-FDD, LTE-TDD	LTE-FDD, LTE-TDD	LTE-FDD, LTE-TDD	LTE-FDD, LTE-TDD
4G LTE bands (in MHz)	**FDD Bands** B2: 1850 to 1910 Tx; 1930 to 1990 Rx B4: 1710 to 1755 Tx; 2110 to 2155 Rx AWS 1700/2100 B5: 824 to 849 Tx; 869 to 894 Rx B8: 880 to 915 Tx; 925 to 960 Rx B12: 699 to 716 Tx; 729 to 746 Rx B13: 777 to 787 Tx; 746 to 756 Rx B14: 788 to 798 Tx; 758 to 768 Rx	**FDD Bands** B2: 1850 to 1910 Tx; 1930 to 1990 Rx B4: 1710 to 1755 Tx; 2110 to 2155 Rx AWS 1700/2100 B5: 824 to 849 Tx; 869 to 894 Rx B7: 2500 to 2570 Tx; 2620 to 2690 Rx B12: 699 to 716 Tx; 729 to 746 Rx B13: 777 to 787 Tx; 746 to 756 Rx B14: 788 to 798 Tx; 758 to 768 Rx	**FDD Bands** B3: 1710 to 1785 Tx; 1805 to 1880 Rx B4: 1710 to 1755 Tx; 2110 to 2155 Rx AWS 1700/2100 B7: 2500 to 2570 Tx; 2620 to 2690 Rx B20: 832 to 862 Tx; 791 to 821 Rx B28: 703 to 748 Tx; 758 to 803 Rx B31: 453 to 458 Tx; 463 to 468 Rx B72: 451 to 456 Tx; 461 to 466 Rx	**FDD Bands** B3: 1710 to 1785 Tx; 1805 to 1880 Rx B4: 1710 to 1755 Tx; 2110 to 2155 Rx AWS 1700/2100 B7: 2500 to 2570 Tx; 2620 to 2690 Rx B20: 832 to 862 Tx; 791 to 821 Rx B28: 703 to 748 Tx; 758 to 803 Rx B87: 410 to 415 Tx; 420 to 425 Rx	**FDD Bands** B1: 1920 to 1980 Tx; 2110 to 2170 Rx B3: 1710 to 1785 Tx; 1805 to 1880 Rx B5: 824 to 849 Tx; 869 to 894 Rx B7: 2500 to 2570 Tx; 2620 to 2690 Rx B8: 880 to 915 Tx; 925 to 960 Rx B20: 832 to 862 Tx; 791 to 821 Rx B28: 703 to 748 Tx; 758 to 803 Rx

© 2022-2023 Nokia. Nokia Confidential Information
Use subject to agreed restrictions on disclosure and use.

Table 30 **7705 SAR-Hmc Cellular Radio Specifications (Continued)**

Region	**North America**		**EMEA/CALA B31**	**EMEA/CALA B87**	**EMEA/APAC**
7705 SAR-Hmc Variant Part Number	**3HE12472AA**	**3HE12473AA**	**3HE12474AA**	**3HE12475AA**	**3HE12477AA**
4G LTE bands (in MHz) (continued)	B25: 1850 to 1915 Tx; 1930 to 1995 Rx B26: 814 to 849 Tx; 859 to 894 Rx B66: 1710 to 1780 Tx; 2110 to 2200 Rx **TDD Bands** B41: 2496 to 2690 B42: 3400 to 3600 B43: 3600 to 3800 B48: 3550 to 3700	B25: 1850 to 1915 Tx; 1930 to 1995 Rx B26: 814 to 849 Tx; 859 to 894 Rx B66: 1710 to 1780 Tx; 2110 to 2200 Rx B71: 663 to 698 Tx; 617 to 652 Rx **TDD Bands** B41: 2496 to 2690 B42: 3400 to 3600 B43: 3600 to 3800 B48: 3550 to 3700	**TDD Bands** B38: 2570 to 2620 B42: 3400 to 3600 B43: 3600 to 3800	**TDD Bands** B38: 2570 to 2620 B42: 3400 to 3600 B43: 3600 to 3800	B32: n/a Tx; 1452 to 1496 Rx **TDD Bands** B38: 2570 to 2620 B40: 2300 to 2400 B41: 2496 to 2690 B42: 3400 to 3600 B43: 3600 to 3800
LTE user equipment category	4	7	4	4	7

© 2022-2023 Nokia. Nokia Confidential Information
Use subject to agreed restrictions on disclosure and use.

4.7 Commercial Antenna Specifications

Warning:

- Nokia recommends using approved antennas when available and technically feasible.
- Regulations enacted by national and regional telecommunication regulatory authorities, such as the FCC, limit which antennas can be used with the 7705 SAR-Hm and 7705 SAR-Hmc. For more information about these limitations, contact your Nokia technical support representative.

The following sections describe the specifications for the Nokia-approved cellular, GPS/GLONASS, and WiFi antennas.

4.7.1 Cellular Antenna Specifications

Note: The Main and Diversity antennas should be integrated in one enclosure to maintain proper isolation between the antennas.

This section lists the specifications for the outdoor (directional and omni-directional) and indoor (omni-directional) cellular antennas that are available from Nokia for use with the 7705 SAR-Hm and 7705 SAR-Hmc. This section also lists generic specifications.

4.7.1.1 Outdoor 2G/3G/LTE Omni-directional Antenna Specifications

The specifications for the Outdoor 2G/3G/LTE omni-directional Antenna (3HE12343AA) are described in Table 31.

© 2022-2023 Nokia. Nokia Confidential Information
Use subject to agreed restrictions on disclosure and use.

Table 31 **Specifications for the Outdoor 2G/3G/LTE Omni-directional Antenna**

Specification	Description
Physical Specifications	
Dimensions (H x W)	29.625 x 1 in. (75.3 x 2.54 cm)
Weight (antenna and mounting hardware)	2.5 lb (1.13 kg)
Mounting pipe diameter	Up to 2.5 in. (6.35 cm) O.D. pipe
Connector type	Two N-Type (female) connectors for outdoor application
Radome material	Fiberglass
Electrical Specifications	
Frequency	694 to 960 MHz and 1700 to 2700 MHz
Voltage standing wave ratio (VSWR)	Less than 2:1 maximum over range
Vertical Beamwidth (−3dB)	140°F (60°C) (694 to 960 MHz) and 122°F (50°C) (1700 to 2700 MHz
Isolation	Greater than 20 dB between elements/ports
Impedance	50 Ω (nominal)
Input power	10 W maximum
Gain (maximum)	Omni-directional antenna: • 694 to 960 MHz: 2 dBi • 1700 to 2700 MHz: 3 dBi
Environmental Specifications	
Operating temperature	–40°F to 176°F (–40°C to 80°C)
Rated wind	125 mph (201 kph)
Ingress protection	IPx5

© 2022-2023 Nokia. Nokia Confidential Information
Use subject to agreed restrictions on disclosure and use.

4.7.1.2 Outdoor 2G/3G/LTE Directional Antenna Specifications

The specifications for the Outdoor 2G/3G/LTE Directional Antenna (3HE12344AA) are described in Table 32.

Table 32 **Specifications for the Outdoor 2G/3G/LTE Directional Antenna**

Specification	Description
Physical Specifications	
Dimensions (H x W x D)	12 x 12 x 4.4 in. (30.48 x 30.48 x 11.8 cm)
Weight	4.3 lb (1.95 kg)
Mounting pipe diameter	1.63 to 2.3 in. (4.14 to 5.84 cm) O.D.
Connector type	Two N-Type (female) connectors for outdoor application
Radome material	UL 94VHB Polycarbonate
Electrical Specifications	
Frequency	698 to 960 MHz and 1710 to 2700 MHz
Voltage standing wave ratio (VSWR)	Less than or equal to 1.5:1 maximum over range
Isolation	Less than or equal to 25 dB between ports
Impedance	50 Ω (nominal)
Gain	Directional antenna: • 698 to 960 MHz: less than or equal to 6 dBi • 1710 to 2700 MHz: less than or equal to 8 dBi
Input power	50 W maximum
Environmental Specifications	
Operating temperature	–40°F to 158°F (–40°C to 70°C)
Rated wind	125 mph (201 kph)
Ingress protection	IP67 [1]

Note:

1. When installed according to manufacturer instructions.

© 2022-2023 Nokia. Nokia Confidential Information
Use subject to agreed restrictions on disclosure and use.

4.7.1.3 Indoor LTE Omni-directional Antenna Specifications

The specifications for the indoor LTE omni-directional Antenna (3HE12371AA) are described in Table 33.

Table 33 **Specifications for the Indoor LTE Omni-directional Antenna**

Specification	Description
Physical Specifications	
Dimensions (H x W x D)	6.6 x 0.71 x 0.51 in. (16.8 x 1.8 x 1.3 cm)
Weight (antenna only)	0.05 lb (24 g)
Mounting method	Plug mount
Connector type	Hinged 90° SMA (male) connector for direct mount on the 7705 SAR-Hm [1]
Antenna material	Polycarbonate and Acrylonitrile Butadiene Styrene (ABS)
Electrical Specifications	
Frequency	698 to 960 MHz and 1710 to 2690 MHz
Voltage standing wave ratio (VSWR)	Less than 2:1 maximum over range
Isolation	Greater than 20 dB between elements/ports
Impedance	50 Ω (nominal)
Peak gain (in free space)	• 703 to 960 MHz: 0.34 to –0.48 dBi (straight); –0.21 to 0.22 dBi (bent 90°) • 1710 to 2690 MHz: 0.67 to 2.04 dBi (straight); 1.0 to 3.45 dBi (bent 90°)
Input power	5 W maximum
Environmental Specifications	
Operating temperature	–40°F to 185°F (–40°C to 85°C)

Note:

1. Recommended torque for mounting: 8 lbf-in (0.9 N·m). Maximum torque for mounting: 10.4 lbf-in (1.176 N·m).

© 2022-2023 Nokia. Nokia Confidential Information
Use subject to agreed restrictions on disclosure and use.

4.7.1.4 Generic Outdoor Cellular Antenna Requirements

Table 34 lists the requirements for 3G and 4G generic outdoor antennas that are not supplied by Nokia.

Table 34 **Requirements for Generic Outdoor 3G and 4G Antennas**

Specification	Description
Frequency	694 to 960 MHz and 1700 to 2700 MHz
Voltage standing wave ratio (VSWR)	Less than 2:1 maximum over range
Isolation	Greater than 20 dB between elements/ports
Impedance	50 Ω (nominal)
Input power	Greater than 1 W
Operating temperature	–40°F to 176°F (–40°C to 80°C)
Connector type	Options: • SMA (Male) connector for direct mount on the 7705 SAR-Hm • N (male) connector for direct mount on the 7705 Outdoor Enclosure • N (female) connector for use with Nokia cable kits
Gain	Omni-directional antenna: • 694 to 960 MHz: less than or equal to 2 dBi • 1700 to 2700 MHz: less than or equal to 3 dBi Directional antenna: • 694 to 960 MHz: less than or equal to 6 dBi • 1700 to 2700 MHz: less than or equal to 8 dBi

4.7.2 WiFi Omni-directional and Directional Antenna Specifications

This section lists the specifications for the outdoor and indoor WiFi omni-directional and directional antennas that are available from and approved by Nokia for use with the 7705 SAR-Hm. This section also lists the antenna specifications.

© 2022-2023 Nokia. Nokia Confidential Information
Use subject to agreed restrictions on disclosure and use.

4.7.2.1 Outdoor WiFi Omni-directional Antenna Specifications

Table 35 lists the outdoor WiFi omni-directional antennas that are available from Nokia, and describes their specifications.

Table 35 **Specifications for the Outdoor WiFi Omni-directional Antennas**

Antenna Part Number	Specification	Description
3HE12346AA	**Physical Specifications**	
	Dimensions (H x W)	3.05 x 0.96 (O.D.) in. (2.45 x 7.75 cm)
	Weight	0.19 lb (85 g)
	Mounting method	N (female) direct mount
	Connector	N (male) connector; brass
	Material	UV stable Acrylonitrile Styrene Acrylate (ASA)
	Electrical Specifications	
	Frequency	2.4 to 2.5 GHz and 4.9 to 5.9 GHz
	Gain	2 dBi (nominal)
	VSWR	Less than 2:1 average
	Impedance	50 Ω (nominal)
	Input power	25 W
	Environmental Specifications	
	Operating temperature	–40°F to 185°F (–40°C to 85°C)
	Ingress protection	IP67
3HE12346AB	**Physical Specifications**	
	Length	4.7 in. (120 mm)
	Base diameter	1.27 in. (32.2 mm)
	Radome diameter	0.75 in. (19 mm)
	Weight (including bracket)	1.16 lb (0.53 kg)
	Connector	N-Type (female) connector, bulkhead type
	Electrical Specifications	
	Frequency	2.4 to 2.5 GHz and 4.9 to 5.9 GHz

© 2022-2023 Nokia. Nokia Confidential Information
Use subject to agreed restrictions on disclosure and use.

Table 35 **Specifications for the Outdoor WiFi Omni-directional Antennas (Continued)**

Antenna Part Number	Specification	Description
	Gain	3.5 dBi (nominal) at 2.4 to 2.5 GHz; 4 dBi at 4.9 to 5.9 GHz
	VSWR	Less than 2.1:1 average
	Impedance	50 Ω (nominal)
	Input power	50 W maximum
	Polarization	Vertical
	Vertical beam width	55°
	Horizontal beam width	360°
	Environmental Specifications	
	Operating temperature	–40°F to 185°F (–40°C to 85°C)
3HE12346AC	**Physical Specifications**	
	Length	11.6 in. (295 mm)
	Base diameter	1.27 in. (32.2 mm)
	Radome diameter	0.75 in. (19 mm)
	Weight (including bracket)	1.25 lb (0.57 kg)
	Connector	N-Type (female) connector, bulkhead type
	Electrical Specifications	
	Frequency	2.4 to 2.5 GHz and 4.9 to 5.9 GHz
	Gain	5 dBi (nominal) at 2.4 to 2.5 GHz; 6 dBi at 4.9 to 5.9 GHz
	VSWR	Less than 2.5:1 average
	Impedance	50 Ω (nominal)
	Input power	50 W maximum
	Polarization	Vertical
	Vertical beam width	45°
	Horizontal beam width	360°
	Lightning protection	DC short
	Environmental Specifications	
	Operating temperature	–40°F to 185°F (–40°C to 85°C)

© 2022-2023 Nokia. Nokia Confidential Information
Use subject to agreed restrictions on disclosure and use.

Table 35 **Specifications for the Outdoor WiFi Omni-directional Antennas (Continued)**

Antenna Part Number	Specification	Description
3HE12346AD	**Physical Specifications**	
	Length	19.5 in. (495 mm)
	Base diameter	1.27 in. (32.2 mm)
	Radome diameter	0.75 in. (19 mm)
	Weight (including bracket)	1.36 lb (0.62 kg)
	Connector	N-Type (female) connector, bulkhead type
	Electrical Specifications	
	Frequency	2.4 to 2.5 GHz and 4.9 to 5.9 GHz
	Gain	7 dBi (nominal) at 2.4 to 2.5 GHz; 8 dBi at 4.9 to 5.9 GHz
	VSWR	Less than 2.5:1 average
	Impedance	50 Ω (nominal)
	Input power	50 W maximum
	Polarization	Vertical
	Vertical beam width	45°
	Horizontal beam width	360°
	Environmental Specifications	
	Operating temperature	–40°F to 185°F (–40°C to 85°C)

4.7.2.2 Outdoor WiFi Directional Antenna Specifications

Table 36 lists the outdoor WiFi Directional antennas that are available from Nokia, and describes their specifications.

© 2022-2023 Nokia. Nokia Confidential Information
Use subject to agreed restrictions on disclosure and use.

Table 36 **Specifications for the Outdoor WiFi Directional Antennas**

Antenna Part Number	Specification	Description
3HE12424AA	**Physical Specifications**	
	Dimensions (L x W x H)	6.3 x 3.5 x 1.3 in. (162 x 90 x 33 mm)
	Weight	1.3 lb (0.6 kg)
	Mounting method	1.5 in. (40 mm) to 1.9 in. (50 mm) diameter masts
	Radome material	UV stable white fiberglass
	Connector type	N-Type (female)
	Electrical Specifications	
	Frequency	2.3 to 6.5 GHz
	VSWR	≤ 1.5:1
	Front to back ratio	> 1.5:1
	Impedance	50 Ω (nominal)
	Polarization	Vertical
	Input power	50 W maximum
	Gain	8 dBi
	Environmental Specifications	
	Operating temperature	–40°F to 185°F (–40°C to 85°C)

4.7.2.3 Vehicle Mount LTE/WiFi/GNSS Antenna Specifications

Table 37 lists the vehicle mount LTE/WiFi/GNSS antennas that are available from Nokia, and describes their specifications.

© 2022-2023 Nokia. Nokia Confidential Information
Use subject to agreed restrictions on disclosure and use.

Table 37 **Specifications for Vehicle Mount LTE/WiFi/GNSS Antennas**

Antenna Part Number	Specification	Description
3HE13569AA [1] 3HE13569AB [1]	**Physical Specifications**	
	Dimensions (H x W x D)	3.00 x 5.98 (O.D.) x 6.48 (O.D.) in. (76.21 x 151.89 x 164.59 mm)
	Weight	2.95 lb (1340 g)
	Mounting (fixing) method	Roof mounting
	Connector	3HE13569AA—N (male) connector 3HE13569AB—SMA (male) connector (LTE and GPS)/SMA-RP (male) connector (WiFi)
	Material	Plastic radome, ABS/PC Material UV Stabilized, UL-94HB
	Color	Black
	Electrical Specifications	
	Frequency (LTE)	698 to 960/1695 to 2170/2300 to 2700/2900 to 3600 MHz
	Frequency (WiFi and DSRC)	2400 to 2500/4900 to 5925 MHz
	Frequency (GPS and GNSS)	1561.098 ± 2.046/1575.42 ± 1.023/1602.5625 ± 4 MHz
	VSWR (LTE) [2]	Less than 1.5
	VSWR (WiFi and DSRC) [2]	Less than 1.4
	Impedance	50 Ω (nominal)
	Average power	25 W
	Gain (LTE antenna, less than 2170 MHz) [3]	4 dBi ± 2.5 dB
	Gain (LTE antenna, more than 2170 MHz) [3]	5 dBi ± 2 dB
	Gain (WiFi antenna, less than 2500 MHz) [3]	4.5 dBi ± 1.5 dB
	Gain (WiFi antenna, more than 4900 MHz) [3]	5 dBi ± 2 dB

© 2022-2023 Nokia. Nokia Confidential Information
Use subject to agreed restrictions on disclosure and use.

Table 37 **Specifications for Vehicle Mount LTE/WiFi/GNSS Antennas (Continued)**

Antenna Part Number	Specification	Description
3HE13569AA [1] 3HE13569AB [1] (continued)	Isolation LTE to LTE [2]	15 dBi or better
	LNA gain	30 dB ± 2 dB
	Noise figure	< 2.5 dB
	Current	7 to 15 mA
	VDC	2.8 to 5 VDC
	Cable type	RG-58 (LTE and WiFi)/RG-174 (GPS)
	Cable length	17 ft
	Environmental Specifications	
	Operating temperature	–40°F to 185°F (–40°C to 85°C)
	Humidity	95% RH @ +25°C (77°F) for 12 h and 55°C (131°F) for 12 h
	Vibration	MIL-STD 810G, section 514.6, 5 to 500 Hz, 60 min/axis
	Thermal Shocks	MIL-STD 810G, section 503.5, –40°F to 185°F (–40°C to 85°C, 3 cycles
	Drop Test	Minimum of one drop per axis –4, 1 meter drops
	Ingress protection	IP67

Notes:

1. Both antennas are compliant to railway standards EN 50155 and EN 61373.
2. In free space with 17 ft cables
3. Measured on 2 ft GND plane and with 4 in. cable

© 2022-2023 Nokia. Nokia Confidential Information
Use subject to agreed restrictions on disclosure and use.

4.7.2.4 Indoor WiFi Omni-directional Antenna Specifications

The specifications for the Indoor WiFi omni-directional Antenna (3HE12345AA) are described in Table 38.

Table 38 **Indoor WiFi Omni-directional Antenna Specifications**

Specification	Description
Physical Specifications	
Dimensions (H x W)	6.13 x 0.51 in. (15.6 X 0.13 cm)
Mounting method	Screw mount
Connector	Hinged RP-SMA (male) connector; brass
Material	Cover: Thermoplastic elastomers (TPE) Base: Polycarbonate and Polybutylene Terephthalate (PBT)
Electrical Specifications	
Frequency	2.4 to 2.5 GHz and 5.1 to 5.85 GHz
VSWR	Less than 2:1 max over range
Impedance	50 Ω (nominal)
Input power	1 W maximum
Gain	• 2.4 to 2.5 GHz: peak 2.37 dBi • 4.9 to 5.9 GHz: peak 2.93 dBi
Environmental Specifications	
Operating temperature	–40°F to 185°F (–40°C to 85°C)
Ingress protection	IP65

© 2022-2023 Nokia. Nokia Confidential Information
Use subject to agreed restrictions on disclosure and use.

4.7.2.5 Generic WiFi Antenna Requirements

The requirements for customer-supplied generic WiFi omni-directional antenna are described in Table 39.

Table 39 **Requirements for Generic WiFi Antennas**

Specification	Description
Frequency	2.4 GHz and 5.1 to 5.85 GHz
VSWR	Less than 2:1 max over range
Impedance	50 Ω (nominal)
Input power	Greater than 1 W
Operating temperature	–40°F to 185°F (–40°C to 85°C)
Connector type	Options: • RP-SMA (male) for direct mount on the 7705 SAR-Hm • N (male) for direct mount on the 7705 Outdoor Enclosure • N (female) for use with Nokia cable kits
Gain	Omni-directional antenna: • 2.4 to 2.5 GHz: less than or equal to 2.37 dBi • 4.9 to 5.9 GHz: less than or equal to 2.93 dBi

4.7.3 GPS/GNSS Antenna Requirements

Refer to the GNSS Installation Guide, located in the Nokia Documentation Center, for information on antenna offerings and requirements.

© 2022-2023 Nokia. Nokia Confidential Information
Use subject to agreed restrictions on disclosure and use.

4.8 Generic Requirements for Enclosures

If you do not intend to use the 7705 Outdoor Enclosure but do intend to mount the unit outdoors in a cabinet, the following conditions must be met.

- The ambient temperature inside the cabinet must not exceed 149°F (65°C), measured below the 7705 SAR-Hm or 7705 SAR-Hmc when the cabinet is fully configured and operational.
- Weatherproofing is required to ensure that operational requirements are met and that the 7705 SAR-Hm or 7705 SAR-Hmc is not subjected to airborne contaminants, dripping water, and so on, as described in Installation Locations.
- Clearance must be maintained, as defined in Chassis Clearance and Thermal Requirements.
- For a safe and reliable operation, the installer must ensure that all outdoor power and other cable connections meet all applicable local laws, codes, statutes, and electrical code requirements. All wiring must be protected from physical and environmental damage.

© 2022-2023 Nokia. Nokia Confidential Information
Use subject to agreed restrictions on disclosure and use.

© 2022-2023 Nokia. Nokia Confidential Information
Use subject to agreed restrictions on disclosure and use.

5 Installing and Grounding the Chassis

5.1 In This Chapter

This chapter describes how to install and ground a 7705 SAR-Hm and 7705 SAR-Hmc chassis for indoor applications. The topics include:

- Unpacking the Chassis
- Installing the SIM
- Installation Preparation and Precautions
- Installing the Chassis on a DIN Rail
- Mounting the Chassis in a Rack
- Mounting the Chassis on a Flat Surface
- 7705 SAR-Hmc Direct Mounting
- Grounding the Chassis

© 2022-2023 Nokia. Nokia Confidential Information
Use subject to agreed restrictions on disclosure and use.

5.2 Unpacking the Chassis

Warning:

- Wear a properly grounded anti-static wrist strap when unpacking the chassis to prevent damage to the equipment due to ESD.
- When unpacking the chassis, hold it by the sides; do not hold it by the connectors.

Note:

- Keep the chassis wrapped in the anti-static bag until you are ready to install the chassis.
- The chassis is shipped with protective covers on the WLAN, Main, GNSS, and Diversity connectors. Do not remove any covers until you are ready to connect the antennas.
- Save the original packaging container and materials for reuse in case the chassis needs to be relocated in the future.
- The 7705 SAR-Hm shipping carton contains a plastic bag with four self-adhesive rubber feet that are to be used for horizontal installations. Do not discard. The plastic bag may be discarded if there is no plan to install the chassis horizontally.

The 7705 SAR-Hm and 7705 SAR-Hmc chassis are wrapped in an anti-static plastic bag, protected with foam end caps, and enclosed in a corrugated cardboard carton. Figure 11 shows a 7705 SAR-Hm chassis being unpacked.

© 2022-2023 Nokia. Nokia Confidential Information
Use subject to agreed restrictions on disclosure and use.

Figure 11 **Unpacking the Chassis**

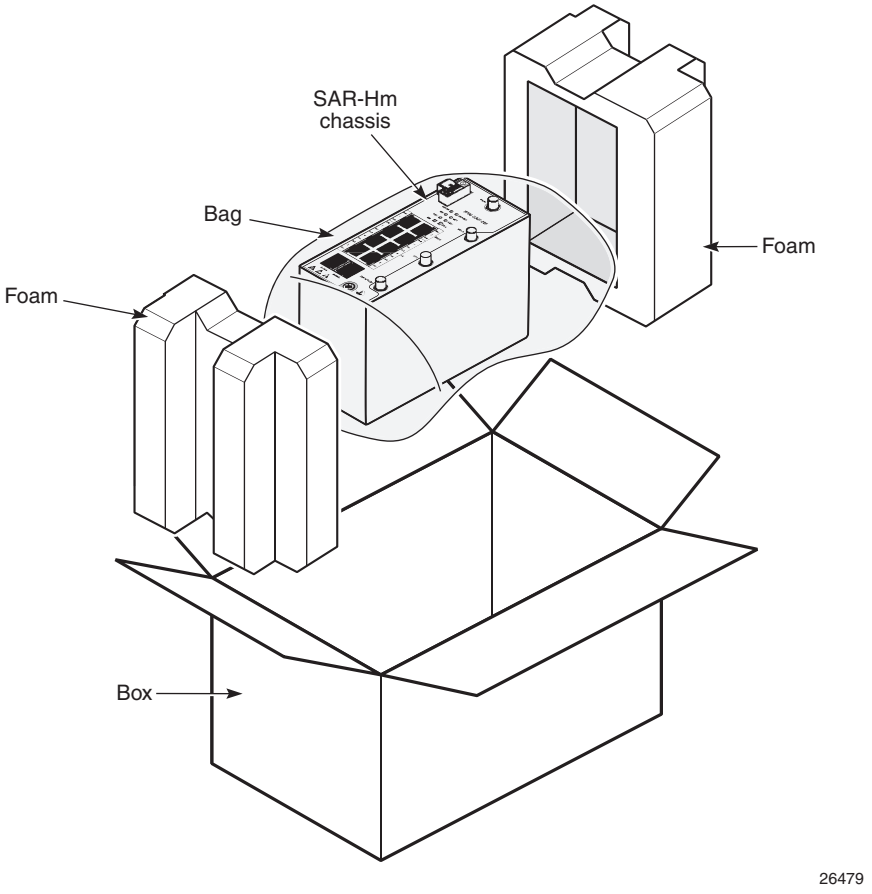

To unpack the chassis:

Step 1. Open the carton.

Step 2. Grasp the chassis by its sides and carefully lift it out of the carton. Place the chassis on a flat surface.

Step 3. Remove the foam caps from each end of the chassis.

Step 4. Remove the protective anti-static wrapping from around the chassis when you are ready to install the chassis.

Step 5. Save the packaging material, particularly if you are pre-staging the chassis.

© 2022-2023 Nokia. Nokia Confidential Information
Use subject to agreed restrictions on disclosure and use.

5.3 Installing the SIM

Warning: The SIM card must be connected or disconnected only in a non-hazardous area or when the device is not energized.

Caution: The 7705 SAR-Hm or 7705 SAR-Hmc must be powered OFF before insertion or extraction of a SIM.

The SIM slots are behind a tamper-resistant screw-down panel on the rear of the chassis.

Required tools and hardware:

- a supported 2FF Industrial Mini SIM
- #1 Phillips screwdriver
- #1 Phillips torque driver

To install a SIM:

Step 1. Locate the protective cover on the back of the chassis.

Step 2. Use a #1 Phillips screwdriver to remove the two counter-sunk M3 screws from the cover, then remove the cover.

Step 3. Orient the SIM as shown in Figure 12 on a 7705 SAR-Hm and Figure 13 on a 7705 SAR-Hmc.

Step 4. Insert the SIM into slot 1. The card slot is spring-loaded. Press gently until the SIM clicks into place. Do not force the SIM into the slot.

© 2022-2023 Nokia. Nokia Confidential Information
Use subject to agreed restrictions on disclosure and use.

Figure 12 **SIM Slots and Orientation on a 7705 SAR-Hm**

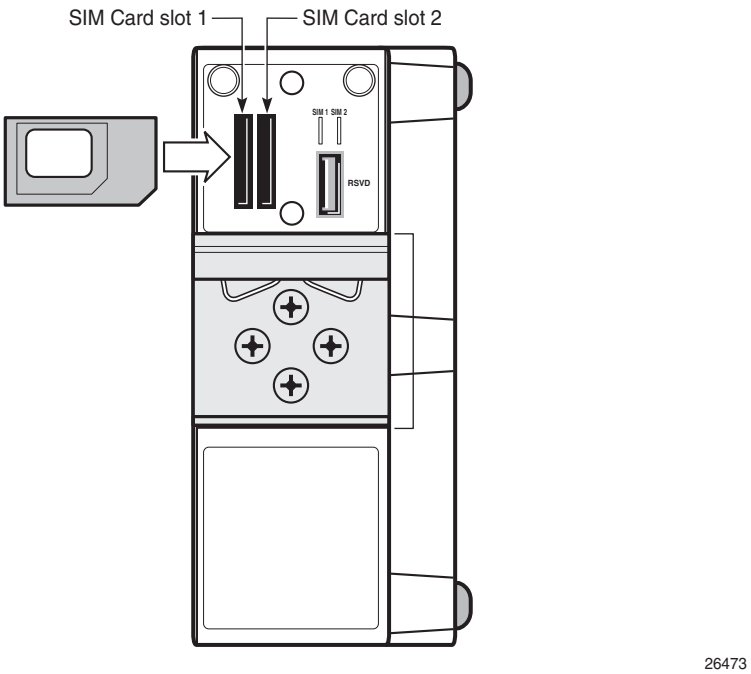

Figure 13 **SIM Slots and Orientation on a 7705 SAR-Hmc**

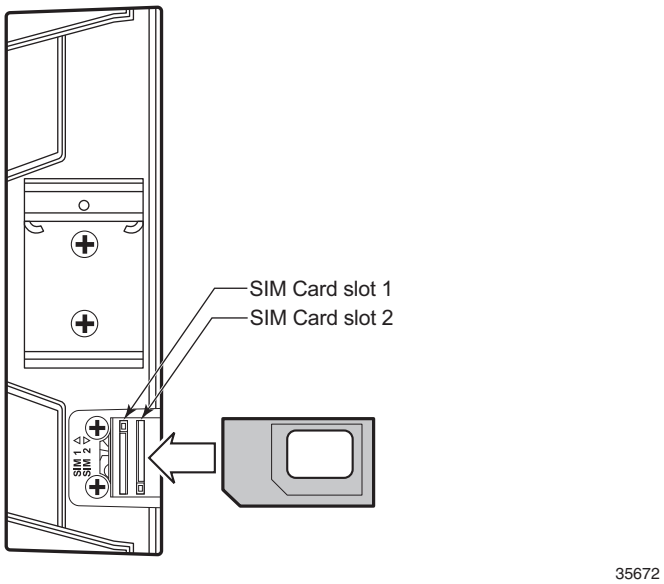

Step 5. Replace the cover and secure it with the two M3 screws. Tighten the screws to a maximum torque of 3.5 lbf-in (0.4 N·m). Do not over-tighten.

© 2022-2023 Nokia. Nokia Confidential Information
Use subject to agreed restrictions on disclosure and use.

5.4 Installation Preparation and Precautions

Before you begin, observe the following:

Danger:

- Only trained and qualified personnel should install or replace this equipment.
- Access to the 7705 SAR-Hm and 7705 SAR-Hmc must be restricted to authorized, trained service personnel.
- Install the 7705 SAR-Hm or 7705 SAR-Hmc in a restricted access location or similar environment to prevent unauthorized access.

Warning:

- Failure to comply with the location requirements outlined in Installation Locations and Chassis Clearance and Thermal Requirements may impede proper airflow, which may result in equipment failure due to overheating.
- Always wear an ESD-preventive wrist or ankle strap and always connect an ESD strap to a nearby ground point that is connected to the site grounding point when working on the 7705 SAR-Hm and 7705 SAR-Hmc, except while making power connections. A typical ground point could be a properly grounded work bench.
- When mounting the chassis on a DIN rail, each chassis must be secured in the rail with its own mounting hardware.
- Do not place the unit on any heat-generating surface.
- Do not stack units.

Note: Also observe the Dangers and Warnings in the Mandatory Regulations and Site Preparation chapters before performing this procedure.

© 2022-2023 Nokia. Nokia Confidential Information
Use subject to agreed restrictions on disclosure and use.

5.5 Installing the Chassis on a DIN Rail

The 7705 SAR-Hm and 7705 SAR-Hmc come equipped with a DIN rail clip to rear-mount the chassis on a horizontal 35 mm × 15 mm or a 35 mm × 7.5 mm top-hat DIN rail that conforms to the EN 50022 standard. Figure 14 shows the profile view of the top-hat DIN rails.

Figure 14 **DIN Rail Profile View**

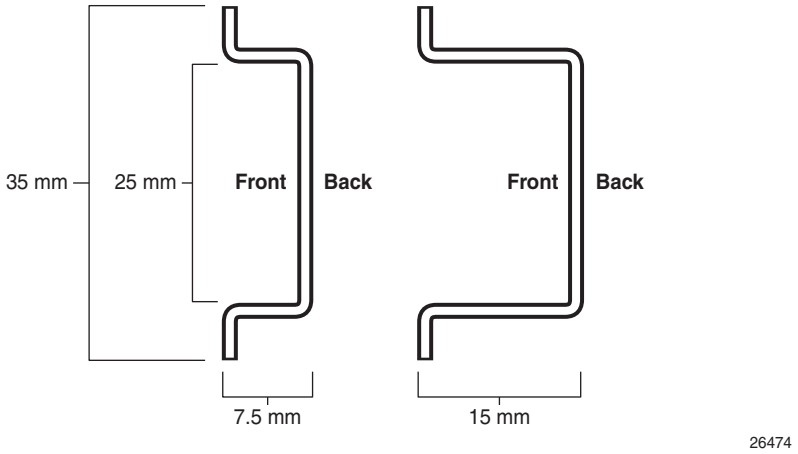

Figure 15 shows the orientation of a 7705 SAR-Hm chassis when it is rear-mounted on a horizontal DIN rail. Figure 16 shows the orientation of a 7705 SAR-Hmc chassis.

Figure 15 **7705 SAR-Hm Chassis Rear-mounted on a Horizontal DIN Rail**

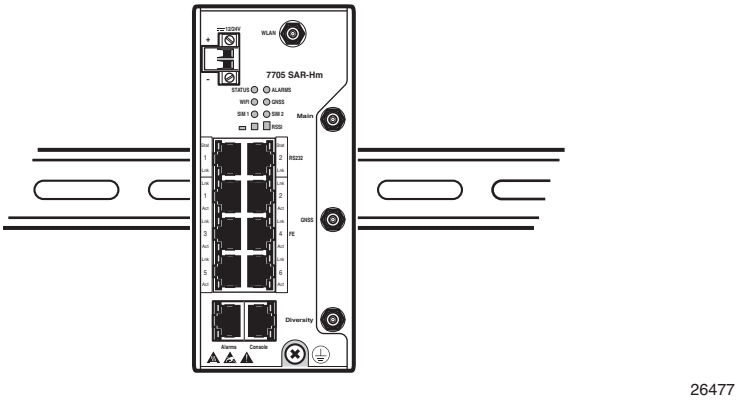

© 2022-2023 Nokia. Nokia Confidential Information
Use subject to agreed restrictions on disclosure and use.

Figure 16 **7705 SAR-Hmc Chassis Rear-mounted on a Horizontal DIN Rail**

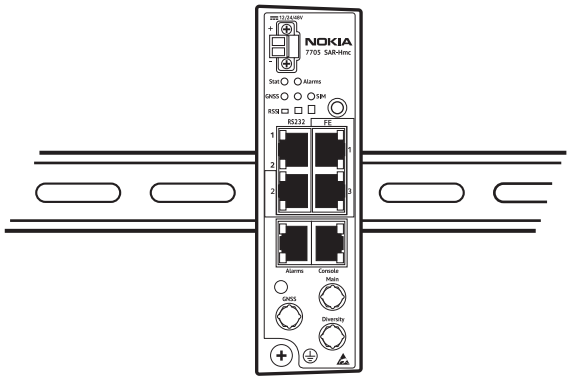

Before you begin, verify that:

- a grounding point is available near the installation location
- the DIN rail is installed in a way that makes it capable of supporting the load of the mounted chassis

5.5.1 DIN Rail-mounting the Chassis

To install the chassis on a DIN rail:

Step 1. Orient the chassis so that the springs on the DIN rail clip are positioned on the top of the DIN rail as shown in Figure 17.

Figure 17 **DIN Rail Clip Oriented for a Horizontal DIN-rail Installation**

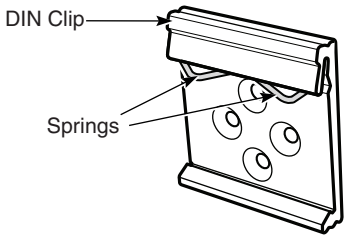

Step 2. Mount the unit on the DIN rail by hooking the top of the DIN rail clip over the rail and applying downward pressure on the unit until the bottom lip latches onto the rail (see Figure 18).

© 2022-2023 Nokia. Nokia Confidential Information
Use subject to agreed restrictions on disclosure and use.

Figure 18 **Mounting the Chassis on a Horizontal DIN Rail**

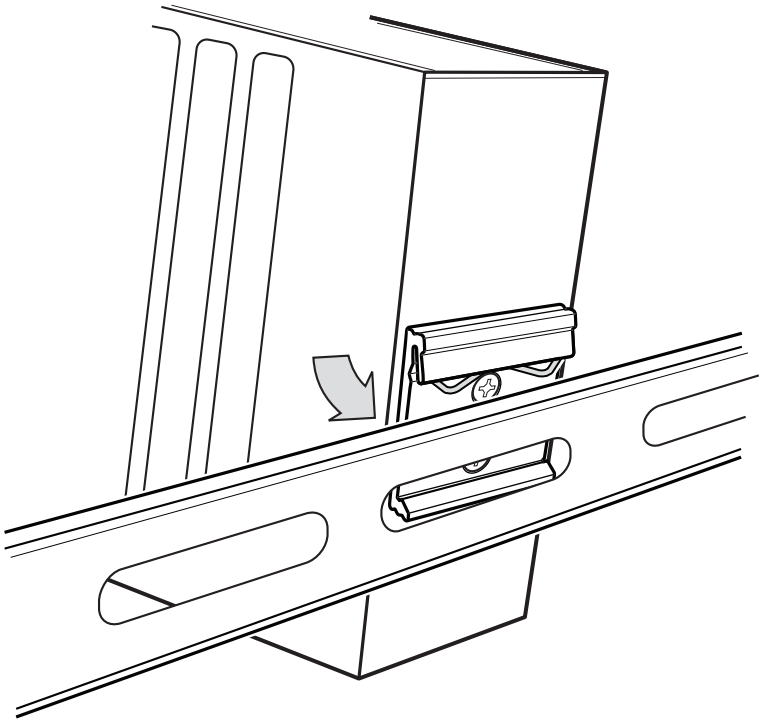

Step 3. Ground the chassis to the building ground. See Grounding the Chassis.

© 2022-2023 Nokia. Nokia Confidential Information
Use subject to agreed restrictions on disclosure and use.

5.6 Mounting the Chassis in a Rack

The chassis can be installed indoors in a rack for permanent use or for temporary pre-staging. To rack-mount the chassis, obtain a DIN rail-to-rack adapter kit from a third-party vendor.

Figure 19 shows an example of an adapter for a standard 19-inch EIA-310 rack, equipped with a EN 50022 35 mm × 7.5 mm top hat DIN rail.

Figure 19 **DIN Rail-to-rack Adapter**

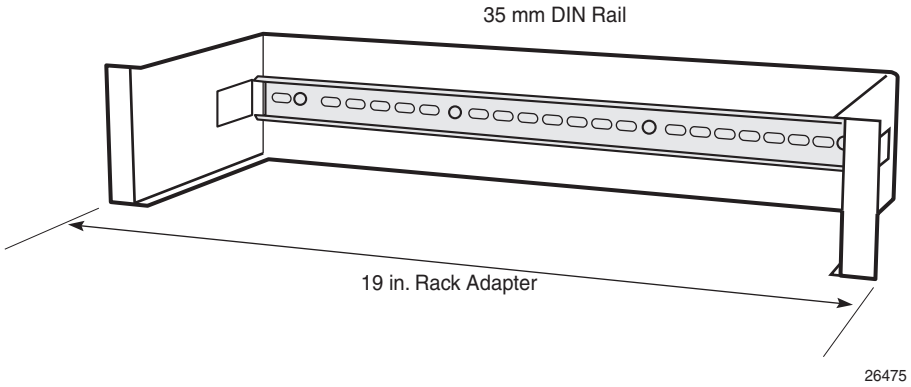

© 2022-2023 Nokia. Nokia Confidential Information
Use subject to agreed restrictions on disclosure and use.

5.7 Mounting the Chassis on a Flat Surface

The chassis may be mounted on a flat surface, such as a table or desktop, for permanent use or for temporary pre-staging.

Note:

- Before starting this procedure, ensure that you have an available grounding point near the installation location.
- For the 7705 SAR-Hm only, the high operating temperature is derated to 122°F (50°C) for flat surface installations.
- The flat-surface location must comply with the requirements described in Chassis Clearance and Thermal Requirements.

Required hardware:

- four self-adhesive rubber feet (shipped with the 7705 SAR-Hm chassis in an accessory bag; ordered separately for an 7705 SAR-Hmc.)
- mini dipole antennas

© 2022-2023 Nokia. Nokia Confidential Information
Use subject to agreed restrictions on disclosure and use.

To install the chassis on a flat surface:

Step 1. Remove the chassis from its packaging and place it on a flat anti-static surface.

Step 2. Install the supplied rubber feet on the 7705 SAR-Hm by peeling the back covers off the rubber feet and affixing the feet to the four pre-defined foot locations on the exterior of the chassis. See Figure 20.

Figure 20 **Rubber Feet Location on the 7705 SAR-Hm**

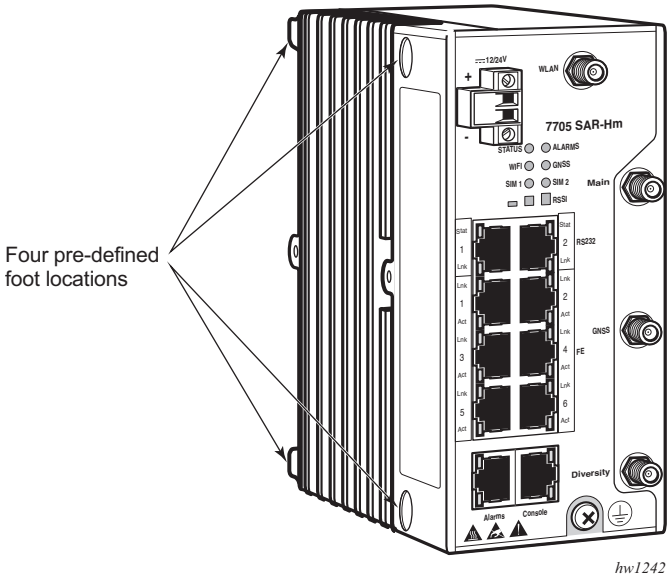

Step 3. Set the chassis on its feet, as shown Figure 21, on a flat surface near the external power source. Make sure that there is at least 3 in. (7.62 cm) of space on the front, sides, rear, and top for proper air circulation.

Figure 21 **Setting the 7705 SAR-Hm on a Flat Surface**

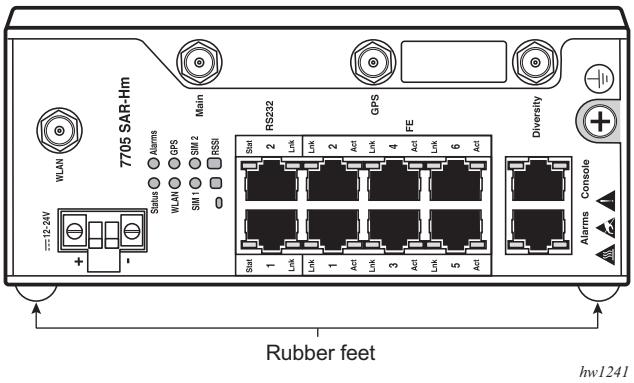

© 2022-2023 Nokia. Nokia Confidential Information
Use subject to agreed restrictions on disclosure and use.

Step 4. Ground the chassis as described in Grounding the Chassis.

Step 5. Attach the mini dipole antennas to the appropriate ports. See Making Indoor Antenna Connections to the 7705 SAR-Hm. Also refer to this chapter for the antenna orientations.

© 2022-2023 Nokia. Nokia Confidential Information
Use subject to agreed restrictions on disclosure and use.

5.8 7705 SAR-Hmc Direct Mounting

Use the 7705 SAR-Hmc Direct Mount Template found in Appendix - 7705 SAR-Hmc Direct Mount Template for a 7705 SAR-Hmc direct mount. Print the template at 100%.

There are two mounting holes integrated into the chassis that are used to mount the 7705 SAR-Hmc directly on any surface, such as a wall or steel plate. See the mounting template for the size and location of the holes.

The recommended screw or bolt size is #10-32 (M5). The torque and screw length is a function of the mounting material.

© 2022-2023 Nokia. Nokia Confidential Information
Use subject to agreed restrictions on disclosure and use.

5.9 Grounding the Chassis

This section describes how to prepare the ground wire for the 7705 SAR-Hm or 7705 SAR-Hmc chassis and how to connect the chassis to earth ground.

The ground wire is not provided. The length of the ground wire depends on the location of the chassis and proximity to the proper grounding facilities.

Danger:

- Do not connect the input power to the chassis before making the chassis ground connection.
- The 7705 SAR-Hm and 7705 SAR-Hmc chassis are equipped with an M4 screw with an internal tooth star washer and a second external tooth lock washer located at the bottom of the faceplate. The screw and washers allow a ground wire to be attached to the chassis via a closed loop crimp connector. The chassis ground must be a permanent connection to the earth (building) ground point, using either a direct connection or a ground bus.
- When wiring the unit, the chassis ground connection must always be made first and disconnected last.
- The M4 screw used to secure the chassis ground wire must only be used for that purpose.

Note:

- All bare conductors must be coated with an appropriate antioxidant compound before crimp connections are made. All unplated connectors, braided strap, and bus bars must be brought to a bright finish and then coated with an antioxidant before connecting them.
- All surfaces that are used for intentionally grounding the 7705 SAR-Hm or 7705 SAR-Hmc chassis must be brought to a bright finish, and an antioxidant solution must be applied to the surfaces being joined.
- Non-conductive coatings (such as paint) must be removed from threads and other contact surfaces to ensure electrical conductivity. Thread-forming screws with paint piercing grounding washers may be used for this purpose during installation.
- The 7705 SAR-Hm and 7705 SAR-Hmc support both CBN and IBN. For systems using an AC power source, only CBN is supported.

© 2022-2023 Nokia. Nokia Confidential Information
Use subject to agreed restrictions on disclosure and use.

5.9.1 Making the Ground Connection

Required tools and hardware:

- wire stripper
- wire cutter
- crimping tool
- #2 Phillips torque driver
- M4 screw with internal tooth star washer (provided with chassis)
- external tooth star washer (not provided with chassis)
- ring lug
- minimum #12 AWG (3.3 sq mm; 2.0 mm diameter) wire, green and yellow insulation

Figure 22 shows how to prepare the ground wire. Table 40 describes the ground wire components.

Figure 22 **Preparing the Ground Wire**

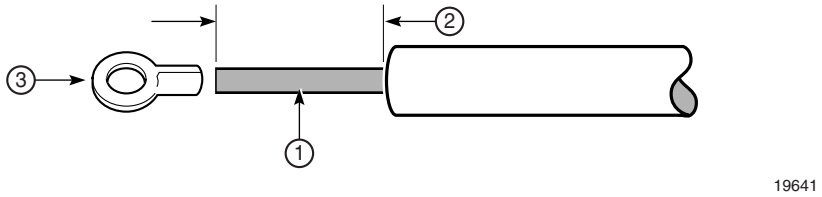

Table 40 **Ground Wire Descriptions**

Key	Description
1	Copper ground wire with a green and yellow insulation, minimum #12 AWG (3.3 sq mm; 2.0 mm diameter)
2	Insulation stripped according to local safety code
3	Ring lug

Figure 23 shows the ground connector on a 7705 SAR-Hm and Figure 24 shows the ground connector on a 7705 SAR-Hmc. Table 41 describes the chassis ground connection components.

© 2022-2023 Nokia. Nokia Confidential Information
Use subject to agreed restrictions on disclosure and use.

Figure 23 **Attaching a Ground Connector on a 7705 SAR-Hm**

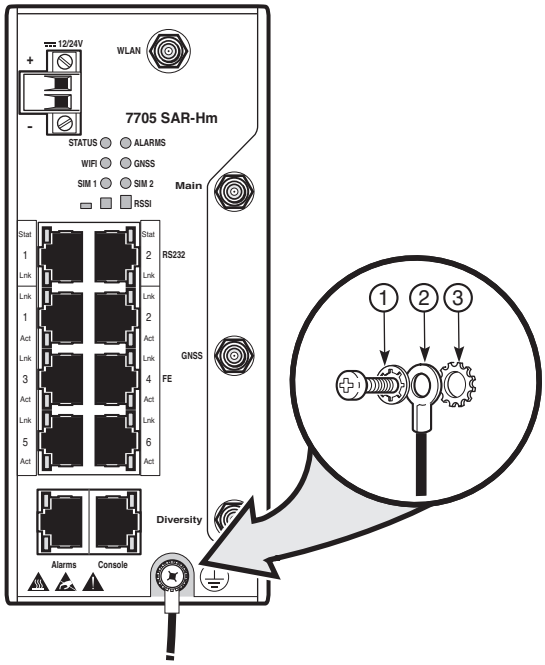

26471

Figure 24 **Attaching a Ground Connector on a 7705 SAR-Hmc**

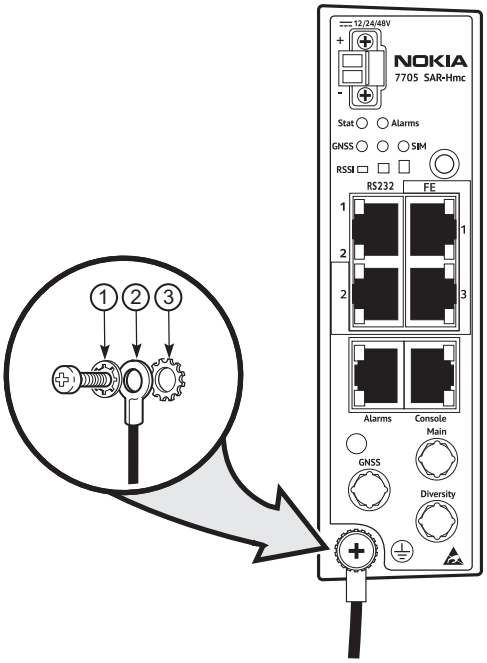

35674

© 2022-2023 Nokia. Nokia Confidential Information
Use subject to agreed restrictions on disclosure and use.

Table 41 **Ground Connection Components**

Key	Description
1	M4 screw with internal tooth star washer (provided with chassis)
2	Ring lug and chassis ground wire (green and yellow insulation)
3	External tooth star washer (not provided with chassis)

To make a chassis ground connection:

Step 1. Run a single length of #12 AWG (3.3 sq mm; 2.0 mm diameter) (minimum) wire from the ground point (building ground or equipment ground bus) to the chassis ground point.

Step 2. Using a wire-stripping tool, strip the insulation from the wire according to local safety codes and crimp the ring lug to the wire (see Figure 22).

Note: To ensure a reliable connection, use the crimp tool recommended by the crimp manufacturer.

Step 3. Remove the M4 screw from the chassis faceplate.

Step 4. Use the M4 screw to secure the ring lug to the chassis (see Figure 23). Tighten the screw to a torque of 11 lbf-in (1.24 N·m) minimum, 16.0 lbf-in (1.8 N·m) maximum. Do not over-tighten.

Step 5. Connect the opposite end of the ground wire to the appropriate ground point at your installation site. Ensure that the chassis ground connection is made according to local safety codes.

Step 6. Use cable ties to ensure that the ground cable is secured to structural members and ensure that enough wire is left so that the chassis ground connection is not under strain.

© 2022-2023 Nokia. Nokia Confidential Information
Use subject to agreed restrictions on disclosure and use.

6 Making Indoor Antenna Connections to the 7705 SAR-Hm

6.1 In This Chapter

This chapter describes how to connect indoor LTE and WiFi antennas to the ports on the 7705 SAR-Hm. The topics include:

- Overview
- Direct-mounting the Indoor LTE Omni-directional Antenna
- Direct Mounting an Indoor WiFi Antenna
- Optimal Positions for Indoor Antennas

© 2022-2023 Nokia. Nokia Confidential Information
Use subject to agreed restrictions on disclosure and use.

6.2 Overview

Note:

- Installation instructions are shipped with each LTE and WiFi indoor antenna.
- The GPS/GLONASS antenna requires overhead line-of-sight and must not be installed indoors.

When the 7705 SAR-Hm is installed indoors on a desktop or in a rack, indoor LTE and WiFi antennas can be mounted directly on the chassis or they can be cabled to the chassis from an indoor mount or antenna test bed.

© 2022-2023 Nokia. Nokia Confidential Information
Use subject to agreed restrictions on disclosure and use.

6.3 Direct-mounting the Indoor LTE Omni-directional Antenna

The indoor LTE omni-directional Antenna (3HE12371AA) has a hinged SMA (male) connector that is suitable for mounting directly on the 7705 SAR-Hm chassis in an indoor facility. Two antennas are required, one for each RF port. Figure 25 shows the antenna.

Figure 25 **Indoor LTE Omni-directional Antenna**

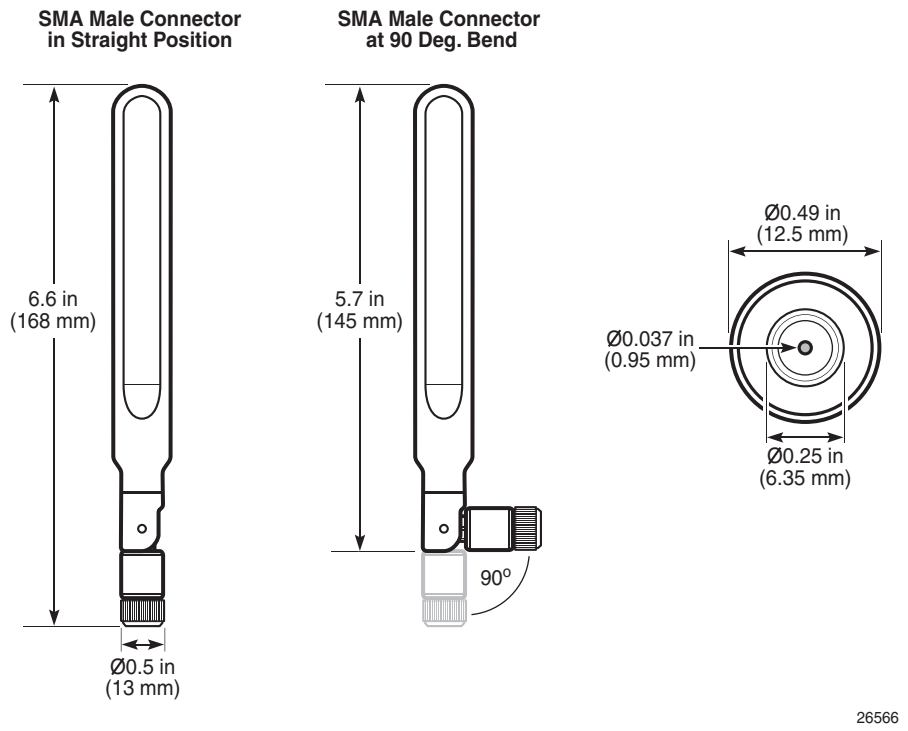

To connect the indoor LTE antenna to the 7705 SAR-Hm chassis:

Step 1. Ensure that the chassis is powered OFF.

Step 2. Attach the threaded SMA (male) connector on the antenna to the Main SMA (female) connector on the front of the chassis. Hand-tighten the connector.

Step 3. Attach the threaded SMA (male) connector on the second antenna to the Diversity SMA (female) connector on the front of the chassis. Hand-tighten the connector.

© 2022-2023 Nokia. Nokia Confidential Information
Use subject to agreed restrictions on disclosure and use.

Step 4. Adjust the antennas as required. See Optimal Positions for Indoor Antennas.

6.4 Direct Mounting an Indoor WiFi Antenna

The WiFi Indoor Antenna (3HE12345AA) is a omni-directional dipole antenna with an RP-SMA (male) connector that can be mounted directly on the 7705 SAR-Hm chassis. Figure 26 shows the antenna.

Figure 26 **WiFi Indoor Antenna**

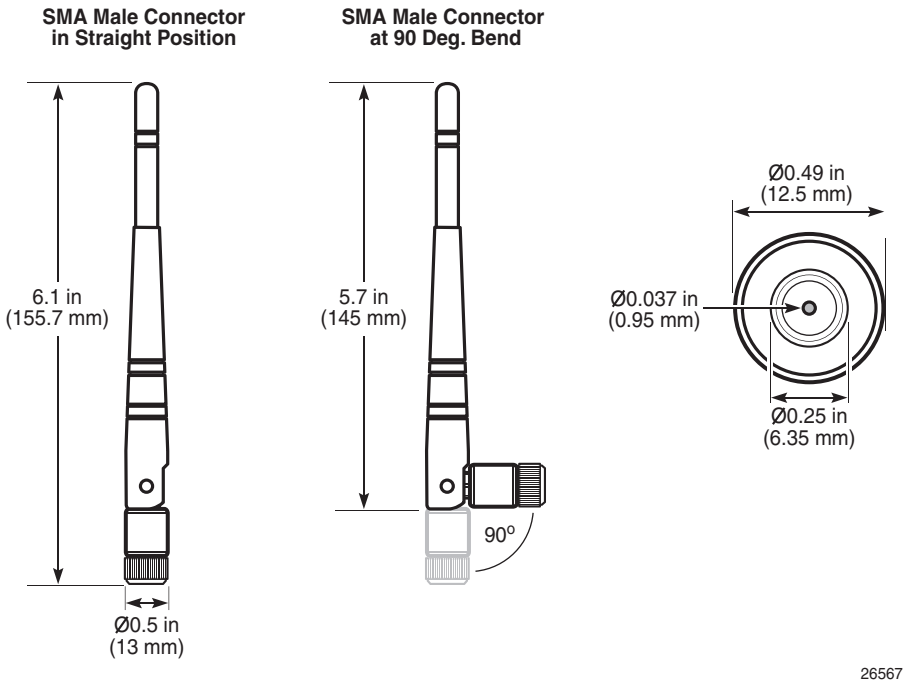

To connect the indoor WiFi antenna to the 7705 SAR-Hm:

Step 1. Ensure that the chassis is powered OFF.

Step 2. Attach the threaded RP-SMA (male) connector to the WLAN RP-SMA (female) connector on the front of the chassis. Hand-tighten the connector.

Step 3. Adjust the antenna as required. See Optimal Positions for Indoor Antennas.

© 2022-2023 Nokia. Nokia Confidential Information
Use subject to agreed restrictions on disclosure and use.

6.5 Optimal Positions for Indoor Antennas

Indoor antenna installation offers short-range coverage. The position and isolation of the indoor antennas are important for proper cellular and WLAN coverage. Misaligned antennas, or antennas installed too closely together, can cause interference and signal degradation. When installing indoor cellular and WiFi antennas directly on the chassis, Nokia recommends the orientation shown in Figure 27 and Figure 28.

Note: These illustrations only pertain to the 7705 SAR-Hm.

Figure 27 **Indoor Antennas with Vertical Chassis**

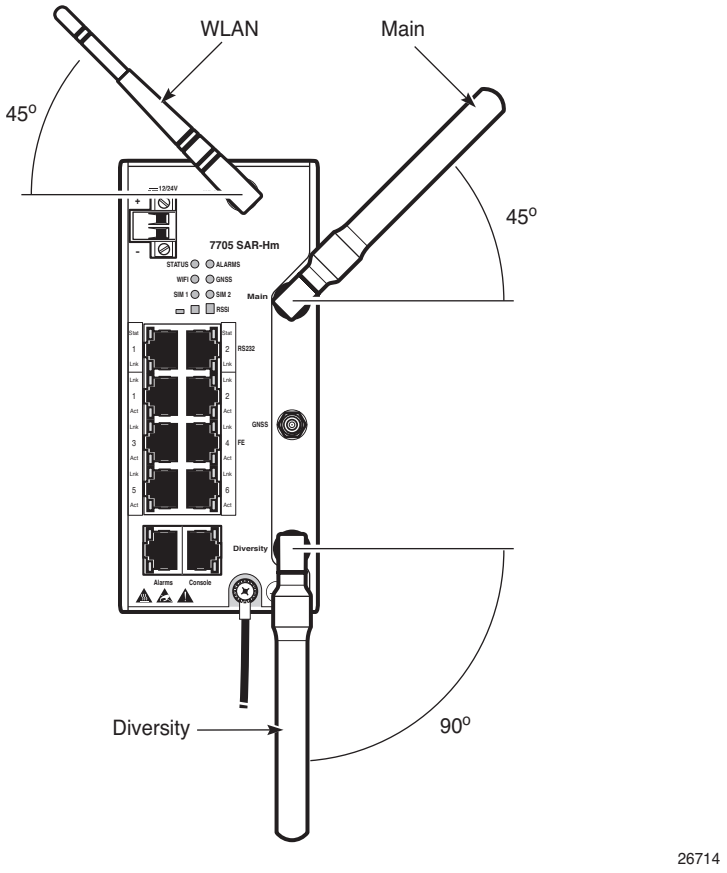

© 2022-2023 Nokia. Nokia Confidential Information
Use subject to agreed restrictions on disclosure and use.

Figure 28 **Indoor Antennas with Horizontal Chassis**

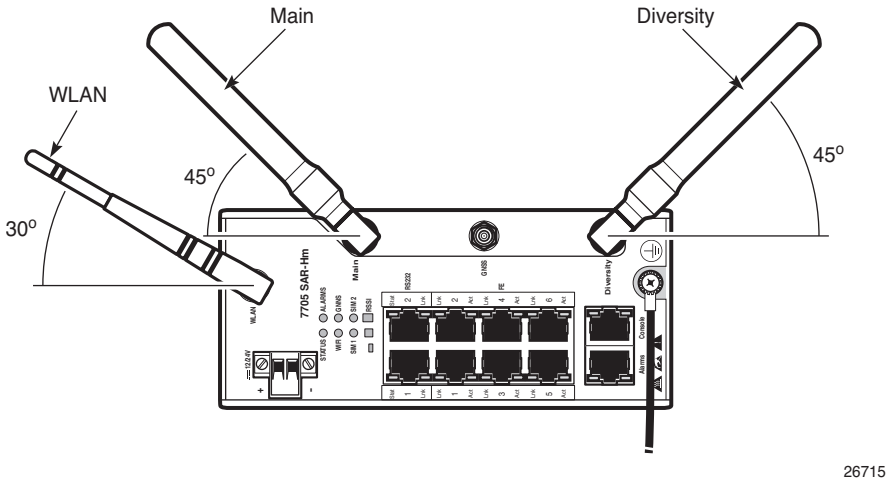

© 2022-2023 Nokia. Nokia Confidential Information
Use subject to agreed restrictions on disclosure and use.

7 7705 Outdoor Enclosure

7.1 In This Chapter

This chapter describes the 7705 Outdoor Enclosure. The topics include:

- 7705 Outdoor Enclosure Features
- 7705 Outdoor Enclosure Requirements for Hazardous Locations
- 7705 Outdoor Enclosure Mounting Hardware
- Installing the Chassis in a 7705 Outdoor Enclosure
- Installing the 7705 Outdoor Enclosure on a Pole or Wall

© 2022-2023 Nokia. Nokia Confidential Information
Use subject to agreed restrictions on disclosure and use.

7.2 7705 Outdoor Enclosure Features

The 7705 Outdoor Enclosure is designed specifically for the 7705 SAR-Hm, 7705 SAR-Hmc, and the optional HV-PS35. The enclosure must be ordered separately.

The 7705 Outdoor Enclosure features the following:

- thermally optimized compact design for minimal visual distraction/footprint (see Figure 30)
- design that ensures that the 7705 SAR-Hm or 7705 SAR-Hmc chassis stays within operating limits when subjected to –40°F to 114.8°F (–40°C to 46°C) ambient outdoor temperatures with Telcordia GR-487 solar loading conditions
- Ingress Protection (IP) Rating of IP66 (protection against water projected from a jet nozzle) and IP67 (protection against water immersion)
- MIL-STD-810G Transit Drop Test (shocks) compliance; resilient to shock and vibration, allowing for vehicle mount installations
- 4.3-10 or N-Type RF ports for external antenna connections
- security features that include lockable front door (see Figure 29) and door alarm (see Figure 32)
- exterior wall or pole mounting brackets (ordered separately)
- condensation and pressure controlled
- UV stabilized polycarbonate construction

© 2022-2023 Nokia. Nokia Confidential Information
Use subject to agreed restrictions on disclosure and use.

Figure 29 7705 Outdoor Enclosure Front and Back

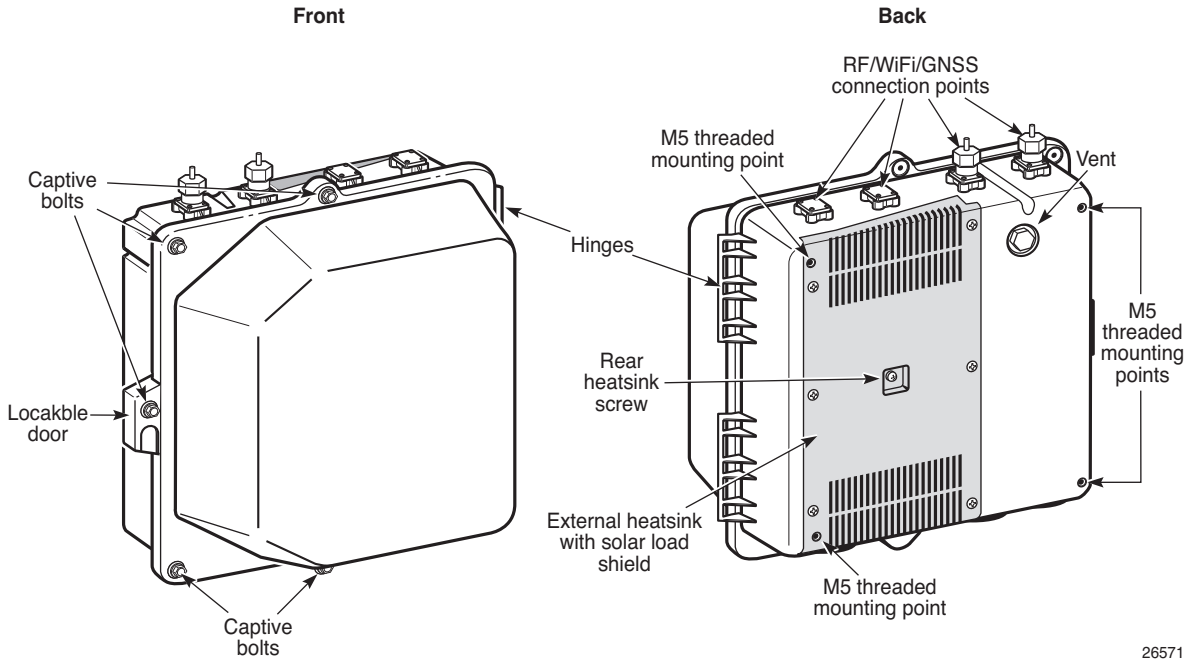

Figure 30 7705 Outdoor Enclosure Dimensions

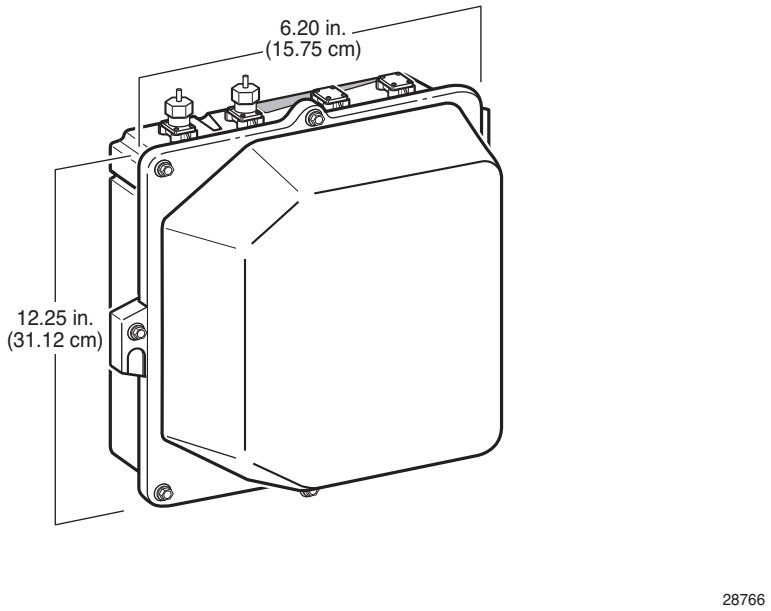

© 2022-2023 Nokia. Nokia Confidential Information
Use subject to agreed restrictions on disclosure and use.

7.2.1 7705 Outdoor Enclosure Connectors and Variant Types

The enclosure is available in variants that are distinguished by the connectors for the Main and Diversity antennas, as listed in Table 42. All other features are the same for the enclosure variants.

Table 42 **7705 Outdoor Enclosure Variants**

Nokia Part Number	Enclosure	Description
3HE12311AA	7705 SAR-Hm Outdoor Enclosure 4.3-10	For use with antennas that have 4.3-10 connectors. Equipped with 4.3-10 (female) connectors for the Main and Diversity antennas.
3HE12311BA	7705 SAR-Hm Outdoor Enclosure N-Type	For use with commercial 2/G/3G/LTE antennas. Equipped with N-Type (female) connectors for the Main and Diversity antennas.
3HE12555BA	7705 SAR-Hmc Outdoor Enclosure N-Type	For use with commercial 2/G/3G/LTE antennas. Equipped with N-Type (female) connectors for the Main and Diversity antennas.

All variants have N-Type (female) connectors for GNSS and WiFi antenna connection points (WiFi is currently not supported on the 7705 SAR-Hmc chassis). Each exterior bulkhead connector includes a jumper to the SMA connection on the 7705 SAR-Hm or 7705 SAR-Hmc.

Figure 31 shows the location of the cabling ports on the top and bottom of the enclosure.

© 2022-2023 Nokia. Nokia Confidential Information
Use subject to agreed restrictions on disclosure and use.

Figure 31 **Top and Bottom Cabling Ports**

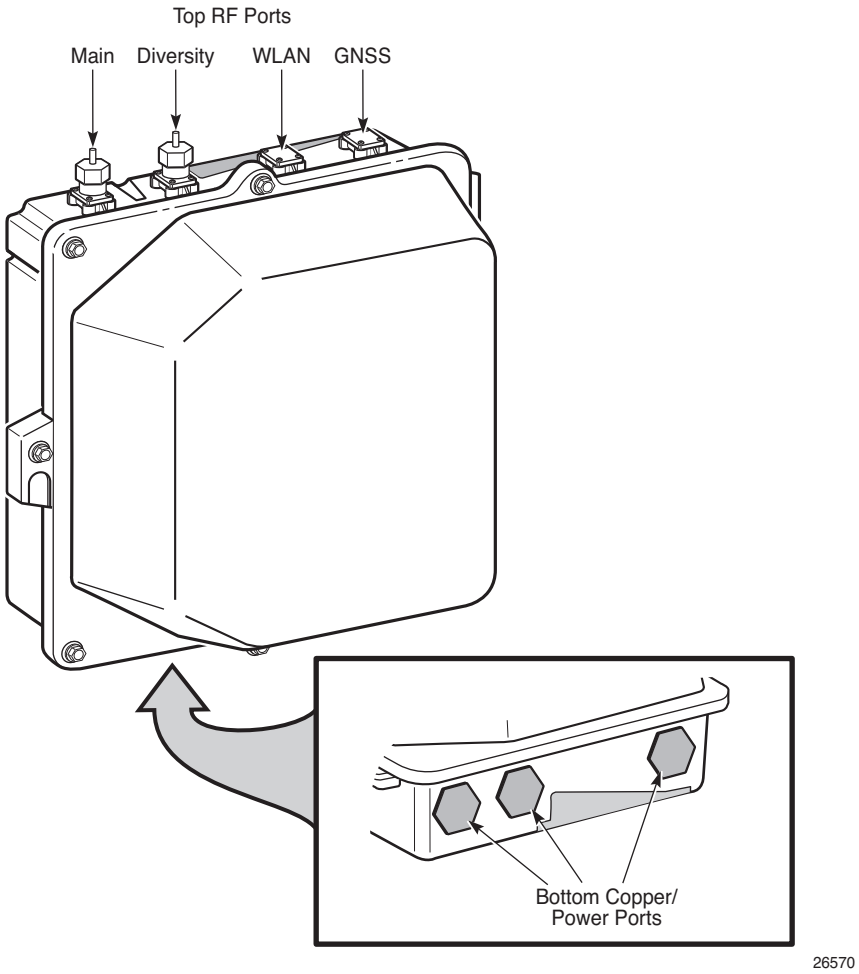

The bottom of the enclosure is equipped with three ports that are designed to accept 3/4-in. liquid-tight conduit/fittings (not supplied). These ports allow the customer-supplied Ethernet and serial port cables and the power and alarm cables to pass through the enclosure.

© 2022-2023 Nokia. Nokia Confidential Information
Use subject to agreed restrictions on disclosure and use.

7.2.2 Interior Features

The 7705 Outdoor Enclosure has integrated grounding points that enable the 7705 SAR-Hm and 7705 SAR-Hmc chassis and the optional HV-PS35 to be grounded inside the enclosure to a ground point. An external ground point is available to connect main earth ground. The enclosure also has an integrated single-pole pushbutton door alarm switch that is located at the top left side to provide intrusion detection. See Alarm Switch for more information.

Figure 32 shows the interior features of the 7705 Outdoor Enclosure installed with a 7705 SAR-Hm and an HV-PS35.

Figure 32 **Interior Features**

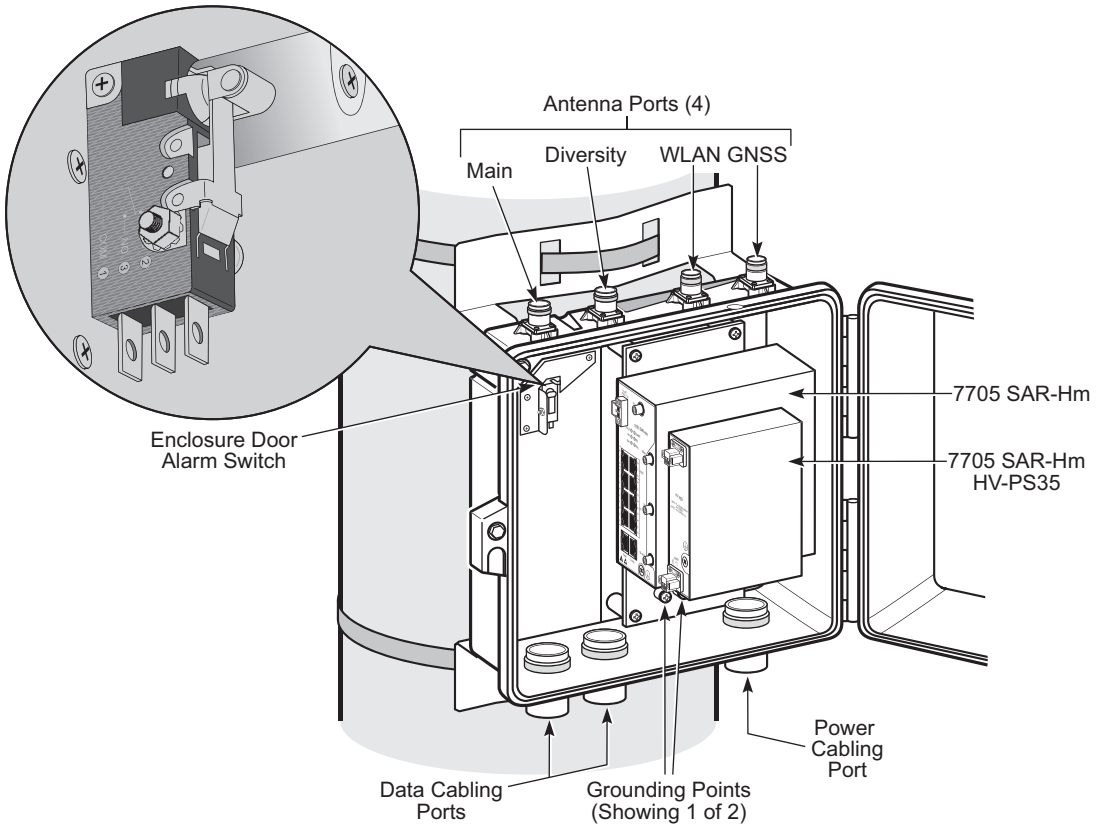

© 2022-2023 Nokia. Nokia Confidential Information
Use subject to agreed restrictions on disclosure and use.

7.2.2.1 Alarm Switch

The alarm switch is equipped with an alarm connection point that can be used to connect the door switch to the Alarms port on the chassis. There are three brass terminals on the back of the switch, labeled NO (Normally Open), NC (Normally Closed), and COM (Common Terminal). Figure 33 shows the terminal labels on the alarm switch.

To wire the door alarm, connect one lead to the COM terminal and one to the NC terminal to generate a fault when the switch is in the open position. There is no need to remove the switch to make the connections. Use shielded cables that are grounded at least on one side to make the connections. The alarm cables are not included. See Alarms Port Pinout Assignments for pinout information.

Figure 33 **Alarm Switch Labels**

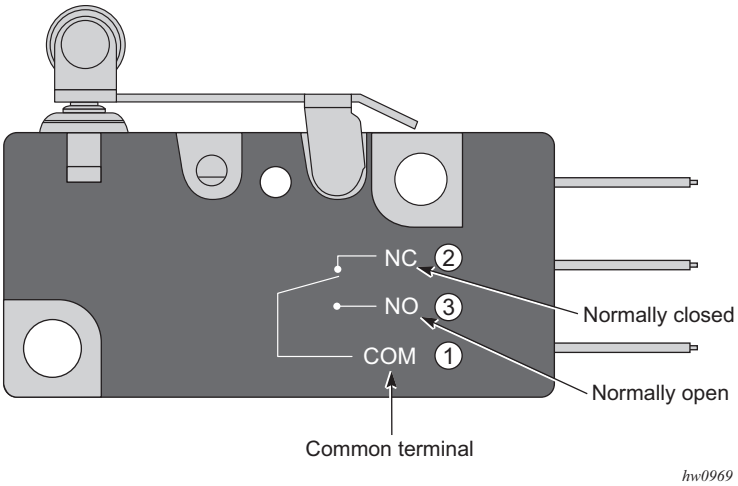

© 2022-2023 Nokia. Nokia Confidential Information
Use subject to agreed restrictions on disclosure and use.

7.3 7705 Outdoor Enclosure Requirements for Hazardous Locations

7.3.1 Schedule of Limitations

- This enclosure must be installed in accordance with the manufacturer's instructions.
- In the end application, the maximum service temperature on the door gasket, heat sink gasket, and polymeric housing shall not be outside the range specified below:

  –25ºC ≤ Ts ≤ 70°C
- Increased safety 'Ex e' creepage and clearance assessments shall be conducted on the metallic parts inside the enclosure according to the working voltage, when forming part of an Equipment certificate assessment. The door switch shall not be connected to a circuit exceeding 3.3V and 100mA, and to be limited for use as a resistive switch only.
- This enclosure when forming part of an Equipment shall comply to the following:
  - Have the Equipment certificate number suffixed 'X' to indicate a Specific condition of Use.
  - The Equipment nameplate shall bear the 'X' suffix marking.
  - The Equipment nameplate shall bear the following warning: WARNING - POTENTIAL ELECTROSTATIC CHARGING HAZARD - SEE INSTRUCTIONS.
  - The Equipment end user installation and operating instructions shall provide adequate guidance to the prevention of electrostatic discharge. For example:

    For Group II applications:
    The enclosure material is non-conducting and may generate an ignition-capable level of electrostatic discharge under certain extreme conditions. The user should ensure that the Equipment is not installed in a location where it may be subjected to external conditions (such as high-pressure steam) which might cause a build-up of electrostatic charges on non-conducting surfaces. Additionally, cleaning of the equipment should be done only with a damp cloth.
- The internal heat sink, the metallic shield at the back of the enclosure, and the metal cable glands for the Main and Diversity antenna connection must be grounded in the end application. If protective earthing is required, the size of the PE connection shall be as per Clause 15.3 and suitable for protection against corrosion as per Clause 15.5 of EN 60079-0:2018.

© 2022-2023 Nokia. Nokia Confidential Information
Use subject to agreed restrictions on disclosure and use.

- The 7705 Outdoor Enclosure is meant to be used with the 7705 SAR-Hm and 7705 SAR-Hmc routers only. One router per enclosure. The final assembly is subject to acceptance by a Notified body (ATEX), or a Certification Agency (North America).
- The 7705 Outdoor Enclosure has not been evaluated for use with rigid conduits. Liquid-tight flexible metal conduits and connectors, marked for heavy duty shall be used for Class I Div2, or Zone 2 installation.

7.3.1.1 7705 Outdoor Enclosure Markings

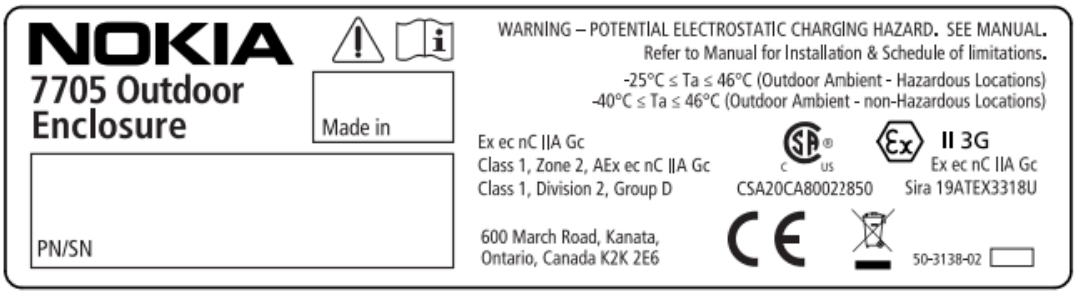

7.3.1.2 7705 Outdoor Enclosure Compliance Standards

Table 43 **Compliance Standards**

EN 60079-0:2018
EN 60079-7:2015
EN 60079-15:2010
UL 60079-0:2019
UL 60079-7:2017
UL 60079-15:2013
CSA C22.2 No. 60079-0:19
CAN/CSA-C22 No. 60079-7:16
CAN/CSA-C22 No. 60079-15:16
ANSI/UL 60950-1-2014, 2nd Edition
CSA-C22 60950-1-07, 2nd Ed, Amendment 2:2014

© 2022-2023 Nokia. Nokia Confidential Information
Use subject to agreed restrictions on disclosure and use.

Table 43 **Compliance Standards (Continued)**

ANSI/UL 62368-1 2nd Ed.
CSA 6238-1:14
IEC/EN 60950-1 AMD1:2009, AMD2:2013
IEC/EN 62368-1:2014
AS/NZS 60950-1:2015
IEC 60529:1989/AMD2:2013

© 2022-2023 Nokia. Nokia Confidential Information
Use subject to agreed restrictions on disclosure and use.

7.4 7705 Outdoor Enclosure Mounting Hardware

A separately orderable mounting kit (3HE12312AA) is available from Nokia for mounting the 7705 Outdoor Enclosure on a pole or a wall. The mounting kit includes two brackets used for the following applications:

- pole mounting. using either 3/4 in. banding straps and/or two 5/8 in. lag screws (straps and screws are not supplied)
- wall mounting, using 4 1/4 in. or M6 lag screws/anchor bolts depending on wall material (screws and anchor bolts are not supplied)

© 2022-2023 Nokia. Nokia Confidential Information
Use subject to agreed restrictions on disclosure and use.

7.5 Installing the Chassis in a 7705 Outdoor Enclosure

Warning:

- Also observe the Dangers and Warnings in the Mandatory Regulations and Site Preparation chapters before performing this procedure.
- Do not open the enclosure when energized.
- The HV-PS35 must not be used in a hazardous location.
- For a safe and reliable operation, the installer must ensure that all outdoor power and other cable connections meet all applicable local laws, codes, statutes, and electrical code requirements. All wiring must be protected from physical and environmental damage.

Note:

- The chassis can be installed in the enclosure with or without an HV-PS35. If the chassis is installed with an HV-PS35 unit, the unit must first be attached and connected to the chassis. See High Voltage Power Supply Unit for more information.
- If the chassis is removed from the enclosure and the enclosure is going to be reused, the thermal gel on heatsink must be replaced. Use a minimum-sized 10 cc container of “Parker Chomerics THERM-A-GAP Gel 30". Remove the existing gel, clean and degrease the surface using isopropyl alcohol, and apply a 2 mm-thick layer (minimum) of the gel on top of each fin as shown in light blue in Figure 34. At a minimum, 5 cc of gel must be dispensed on the heatsink.

© 2022-2023 Nokia. Nokia Confidential Information
Use subject to agreed restrictions on disclosure and use.

Figure 34 **Applying Thermal Gel on the Heatsink for a 7705 SAR-Hm Installation**

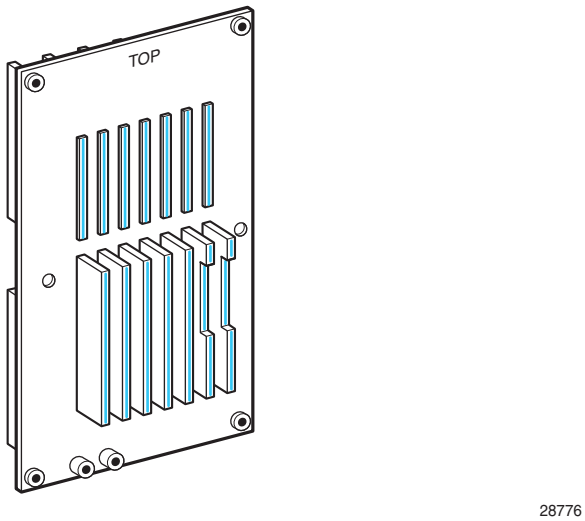

Required hardware:

The following orderable bulkhead cable kits, as required:

- 7705 Outdoor Enclosure N-Type GNSS port (ten bulkheads per pack) (3HE12450AA)
- 7705 Outdoor Enclosure N-Type WiFi port (ten bulkheads per pack) (3HE12449AA), for a 7705 SAR-Hm installation

The following optional replacement bulkhead cable kits, as required:

- 7705 Outdoor Enclosure 4.3-10 Main port (five bulkheads per pack) (3HE12348AA)
- 7705 Outdoor Enclosure 4.3-10 Diversity port (five bulkheads per pack) (3HE12348AB)
- 7705 Outdoor Enclosure N-Type Main port (five bulkheads per pack) (3HE12348BA)
- 7705 Outdoor Enclosure N-Type Diversity port (five bulkheads per pack) (3HE12348BB)

Required tools:

- mounting kit (3HE12312AA)
- #2 Phillips screwdriver
- 2 mm Hex driver
- torque wrench with a minimum 5 to 20 in-lb (0.56 to 2.26 N·m) range

© 2022-2023 Nokia. Nokia Confidential Information
Use subject to agreed restrictions on disclosure and use.

7.5.1 Installing the 7705 SAR-Hm Chassis in a 7705 Outdoor Enclosure

Install the 7705 SAR-Hm chassis in a 7705 Outdoor Enclosure.

Step 1. Loosen, but do not remove, the five captive bolts on the front of the chassis. See Figure 35.

Figure 35 **Loosening the Captive Bolts**

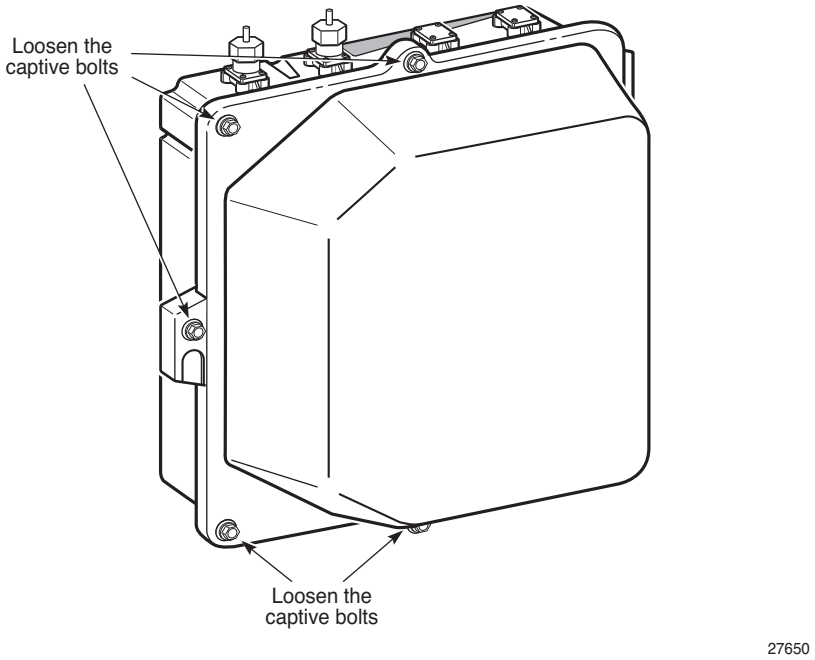

Step 2. Open the door. Remove the screws that are holding the heatsink in place. Save for later re-use. See Figure 36.

© 2022-2023 Nokia. Nokia Confidential Information
Use subject to agreed restrictions on disclosure and use.

Figure 36 **Removing the Interior Heatsink Screws**

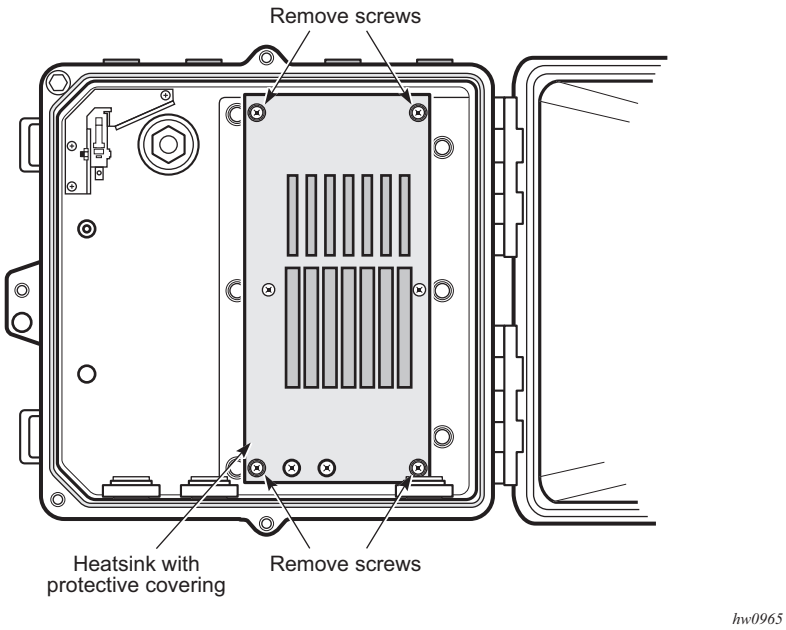

Step 3. Remove the rightmost Ethernet plug and power input plug, shown in Figure 40.

Step 4. Remove the rear heatsink screw on the back of the chassis. Save it for later reuse. See Figure 37.

Figure 37 **Removing the Rear Heatsink Screw**

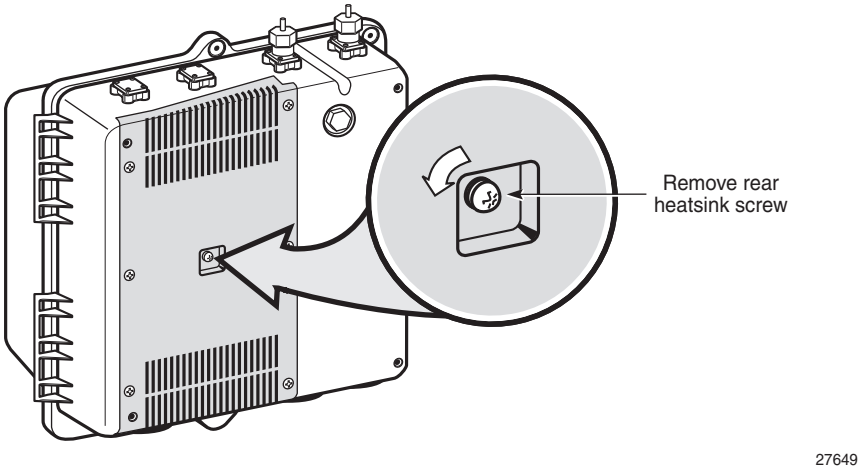

© 2022-2023 Nokia. Nokia Confidential Information
Use subject to agreed restrictions on disclosure and use.

Step 5. Remove the heatsink from the enclosure and discard the protective cover over the thermal gel.

Warning: Do not allow anything to contact the thermal gel during disassembly and handling.

Step 6. Mate the heatsink to the chassis. See Figure 38.

i. Align the two mounting holes on the heatsink to the corresponding holes on the chassis. Note the orientation of the heatsink (top of the heatsink labeled TOP and grounding screws on the bottom).

ii. Insert two M5 x 10 mm countersunk screws through the mounting holes on the heatsink and into the corresponding mounting holes on the chassis.

Torque to 20 in-lb (2.26 N·m). Do not over-tighten. Nokia recommends that a threadlock be applied if the installation location used is in a high-vibration environment.

Figure 38 **Mating the Heatsink to the Chassis**

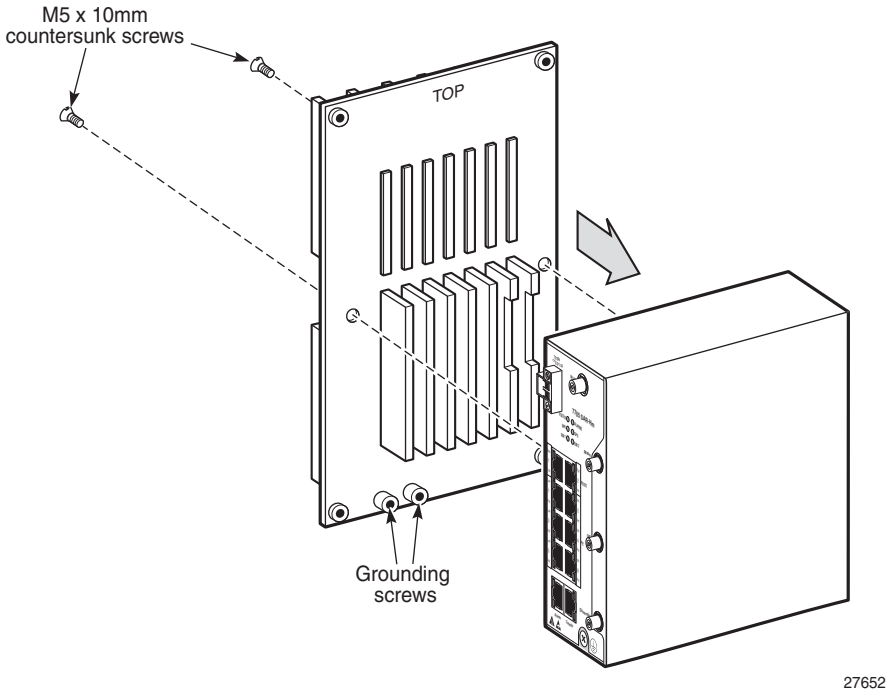

© 2022-2023 Nokia. Nokia Confidential Information
Use subject to agreed restrictions on disclosure and use.

Step 7. Re-install the heatsink with the chassis back in the enclosure using the screws that were removed in Step 2.

Tighten the screws in a criss-cross pattern using a torque of 20 in-lb (2.3 N·m). Do not over-tighten. See Figure 39.

Figure 39 **Re-installing the Heatsink With the Chassis Back in the Enclosure**

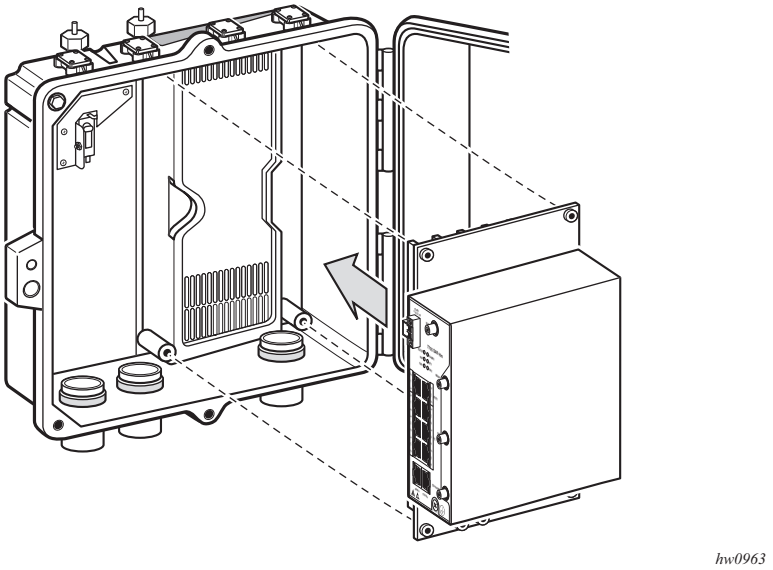

Step 8. Perform the required cabling inside the enclosure.

a. Connect the LTE RF cables.

i. If required, remove the existing blank plates from the Main and Diversity RF ports on the enclosure using a 2 mm Hex driver and replace them with a bulkhead wiring harness.

Torque the harness screws to 5 in-lb (0.56 N·m). Do not over-tighten.

ii. Remove the dust covers from the chassis ports.

iii. Connect the LTE RF cables to the Main and Diversity RF ports on the chassis. See Figure 40.

b. Connect optional WiFi and GNSS cables on the chassis.

i. Remove the existing blank plates from the WiFi and GNSS ports on the enclosure using a 2 mm Hex driver and replace them with a bulkhead wiring harness.

Torque the harness screws to 5 in-lb (0.56 N·m). Do not over-tighten.

© 2022-2023 Nokia. Nokia Confidential Information
Use subject to agreed restrictions on disclosure and use.

ii. Remove the dust covers from the chassis ports.

iii. Connect the WiFi and GNSS cables to the WiFi and GNSS ports on the chassis. See Figure 41.

c. Run the Ethernet/alarms cables up through the two Ethernet ports on the enclosure. Replace the port plug with an appropriate conduit or cordgrip.

d. Run the power cable up through the power input port. Replace the port plug with an appropriate conduit or cordgrip.

e. Make the ground connections following local grounding requirements and practices.

Figure 40 **Connecting the LTE RF Cables on a 7705 SAR-Hm**

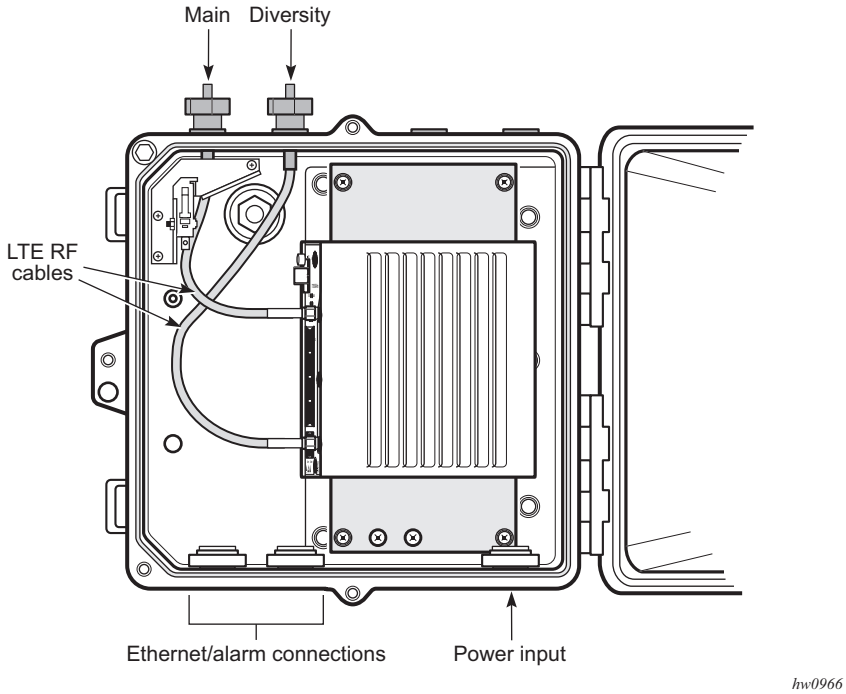

© 2022-2023 Nokia. Nokia Confidential Information
Use subject to agreed restrictions on disclosure and use.

Figure 41 **Connecting the WiFi and GNSS Cables on a 7705 SAR-Hm**

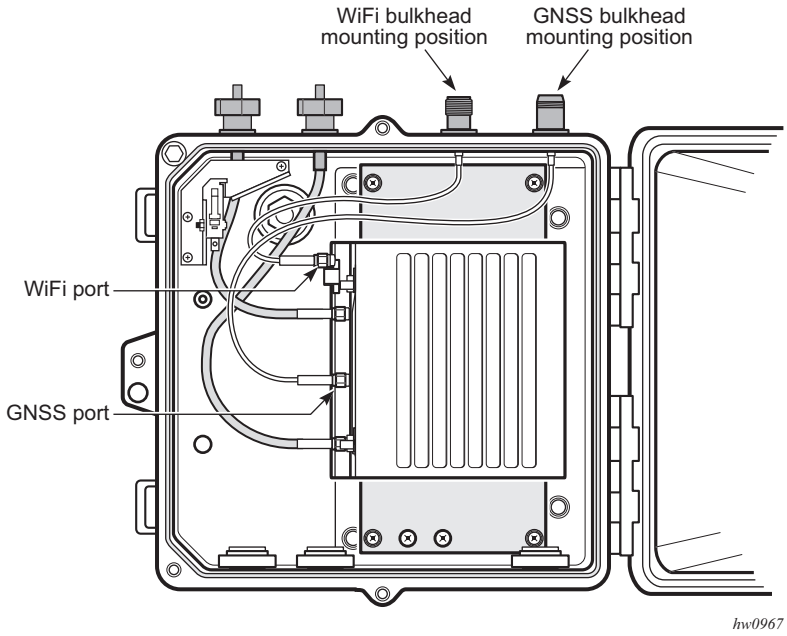

Step 9. Re-install the rear heatsink screw that was removed in Step 4. Tighten the screw using a torque of 20 in-lb (2.3 N·m). Do not over-tighten. See Figure 42.

Figure 42 **Re-installing the Rear Heatsink Screw**

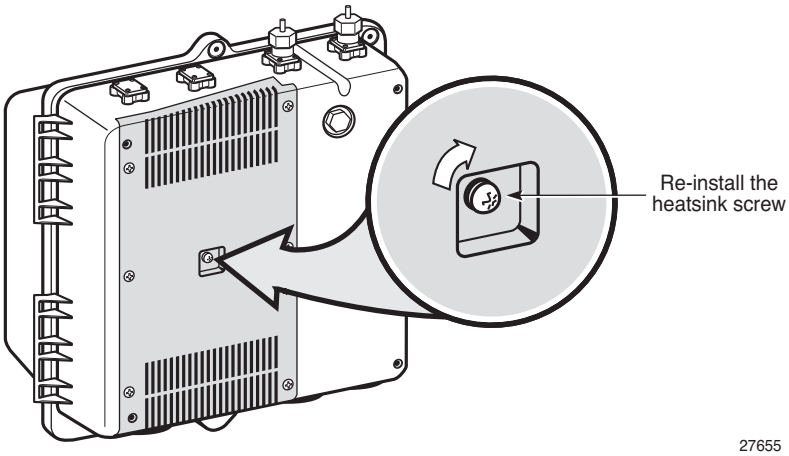

© 2022-2023 Nokia. Nokia Confidential Information
Use subject to agreed restrictions on disclosure and use.

Step 10. Close the cover and tighten the five cover bolts that were loosened in Step 1. Tighten the bolts using a torque of 20 in-lb (2.3 N·m) in the order shown in Figure 43. Do not over-tighten.

Figure 43 **Re-Installing the Cover Bolts**

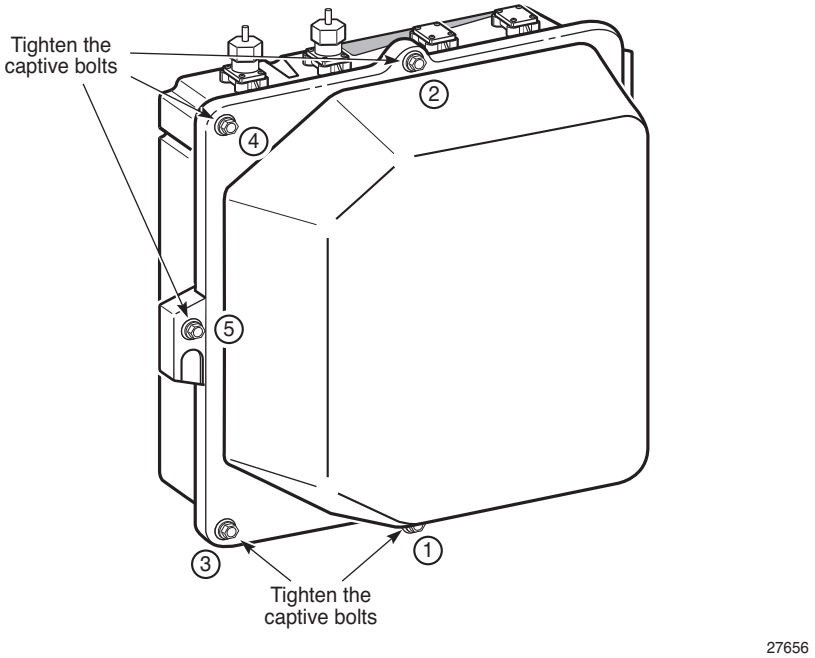

Step 11. Use the threaded mounting points to attach the enclosure to a pole or wall mounting bracket. Note the dimensions between the mounting points. See Figure 44.

© 2022-2023 Nokia. Nokia Confidential Information
Use subject to agreed restrictions on disclosure and use.

Figure 44 **Mounting Points on the Enclosure**

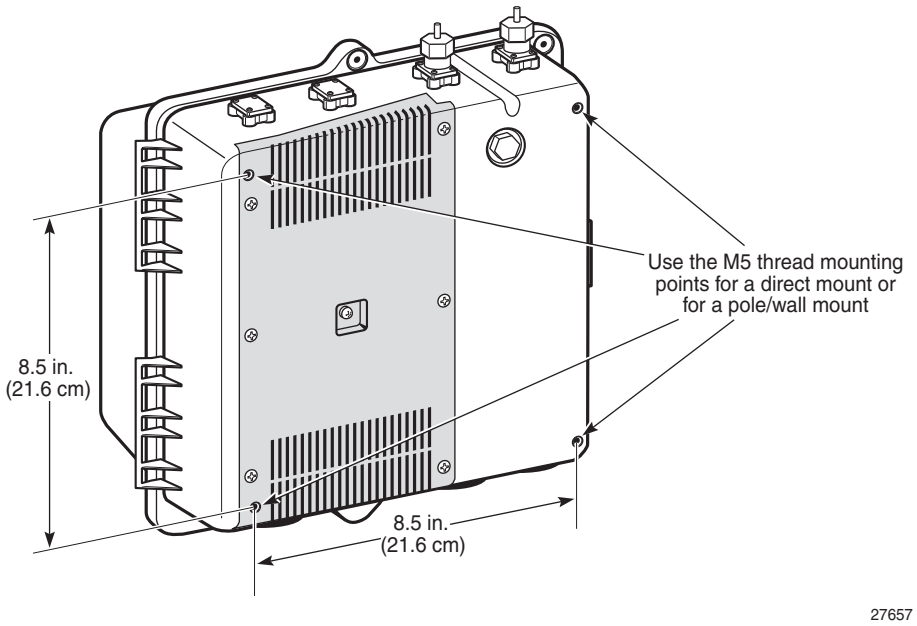

7.5.2 Installing the 7705 SAR-Hmc Chassis in a 7705 Outdoor Enclosure

Install the 7705 SAR-Hmc chassis in a 7705 Outdoor Enclosure.

Step 1. Loosen, but do not remove, the five captive bolts on the front of the chassis. See Figure 35.

Step 2. Open the door and remove the blue protective covering on the heatsink thermal pad.

Step 3. Mate the heatsink to the chassis. See Figure 45.

i. Align the two mounting holes on the chassis to the corresponding holes on the heatsink.

ii. Insert two #10-32 screws through the mounting holes on the chassis and into the corresponding mounting holes on the heatsink.

Torque to 20 in-lb (2.3 N·m). Do not over-tighten. Nokia recommends that a threadlock be applied if the installation location used is in a high-vibration environment.

© 2022-2023 Nokia. Nokia Confidential Information
Use subject to agreed restrictions on disclosure and use.

Figure 45 **Mating the Heatsink to the 7705 SAR-Hmc Chassis**

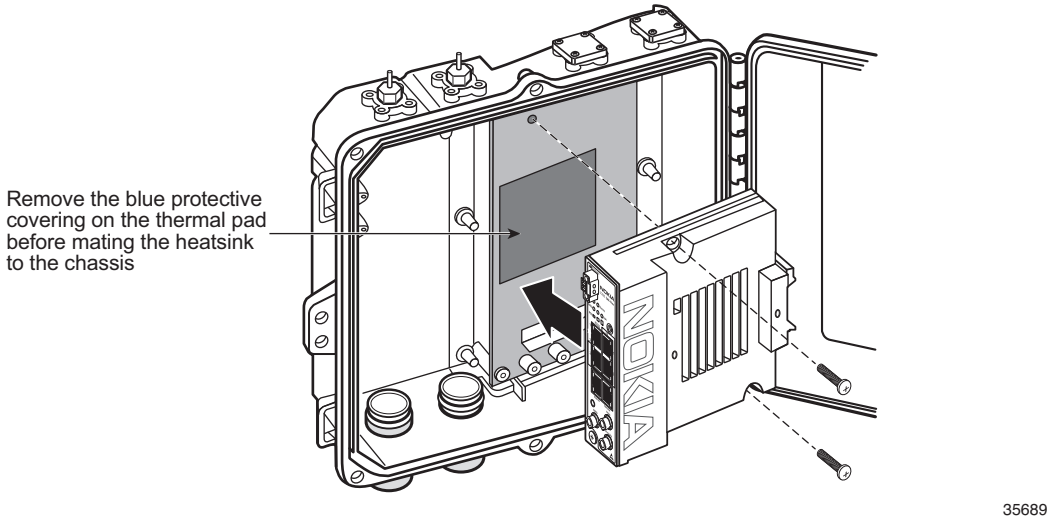

Step 4. Perform the required cabling inside the enclosure.

a. Connect the LTE RF cables.

i. If required, remove the existing blank plates from the Main and Diversity RF ports on the enclosure using a 2 mm Hex driver and replace them with a bulkhead wiring harness.

Torque the harness screws to 5 in-lb (0.56 N·m). Do not over-tighten.

ii. Remove the dust covers from the chassis ports.

iii. Connect the LTE RF cables to the Main and Diversity RF ports on the chassis. See Figure 46.

b. Run the Ethernet/alarms cables up through the two Ethernet ports on the enclosure. Replace the port plug with an appropriate conduit or cordgrip.

c. Run the power cable up through the power input port. Replace the port plug with an appropriate conduit or cordgrip.

d. Make the ground connections following local grounding requirements and practices.

© 2022-2023 Nokia. Nokia Confidential Information
Use subject to agreed restrictions on disclosure and use.

Figure 46 **Connecting the LTE RF Cables on a 7705 SAR-Hmc**

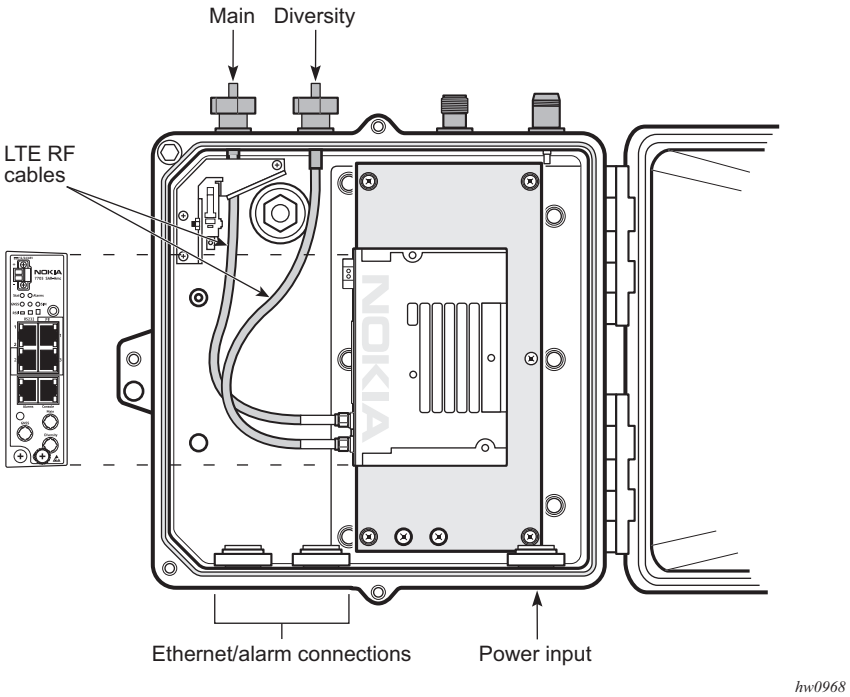

Step 5. Close the cover and tighten the five cover bolts that were loosened in Step 1. Tighten the bolts using a torque of 20 in-lb (2.3 N·m) in the order shown in Figure 47. Do not over-tighten.

© 2022-2023 Nokia. Nokia Confidential Information
Use subject to agreed restrictions on disclosure and use.

Figure 47 **Re-Installing the Cover Bolts**

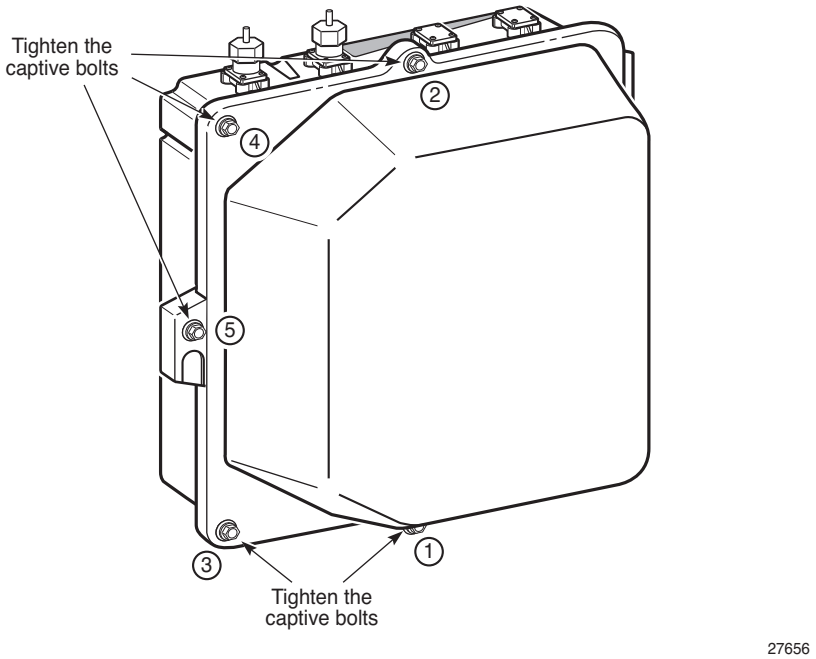

Step 6. Use the threaded mounting points to attach the enclosure to a pole or wall mounting bracket. The dimensions between the mounting points are the same as for the 7705 SAR-Hm. See Figure 44.

© 2022-2023 Nokia. Nokia Confidential Information
Use subject to agreed restrictions on disclosure and use.

7.6 Installing the 7705 Outdoor Enclosure on a Pole or Wall

Note:

- The chassis, with or without an HV-PS35, must be installed in the enclosure before the enclosure is mounted on the pole. See Installing the Chassis in a 7705 Outdoor Enclosure.
- Ground the enclosure by attaching the ground lug before attaching the Ethernet/alarms and power cable conduits. The screw heads used to secure the ground lug might be obscured depending on type of conduits used.

Required hardware:

- pole/wall mounting bracket kit (3HE12312AA) (contains two brackets and four M5 bolts)
- for a pole installation, one of the following:
  - two 0.75 in. x 0.03 in. (19.0 mm x 0.76 mm) (minimum) stainless steel banding straps (not supplied)
  - two lag screws and washers 0.63 in. (15.88 mm) (maximum) appropriate for pole material
- for a wall installation:
  - four 0.25 in. (6.35 mm) or M6 corrosion-proof steel screws and washers
  - lag bolts and anchors for a concrete or brick wall installation
  - if the chassis is being installed on drywall or other soft material, a hardwood board (such as plywood), at least 0.75 in. (19.0 mm) thick, on which the mounting bracket can be installed
- 6 AWG copper grounding wire (measured to the required distance)
- one two-hole ground lug, such as Panduit LCD6-10B-L; hole spacing 0.75 in. (19.0 mm), hole size #10

Required tools:

- #2 Phillips screwdriver, size PH2, to fasten #10 ground screws
- M5 Hex socket torque driver with a capability to 25 in-lb (0.56 to 2.8 N·m)
- socket driver for the lag bolts (wall installation)
- banding tool for attaching the banding straps to a pole (for a pole installation)
- crimping tool for the 6 AWG grounding wire

© 2022-2023 Nokia. Nokia Confidential Information
Use subject to agreed restrictions on disclosure and use.

To mount a 7705 Outdoor Enclosure on a pole or wall:

Step 1. Fasten the mounting bracket to the mounting points at the back of the enclosure using the supplied M5 bolts. Torque to 25 in-lb (2.8 N·m). Do not over-tighten. See Figure 48.

Figure 48 **Fastening the Mounting Bracket To the Enclosure**

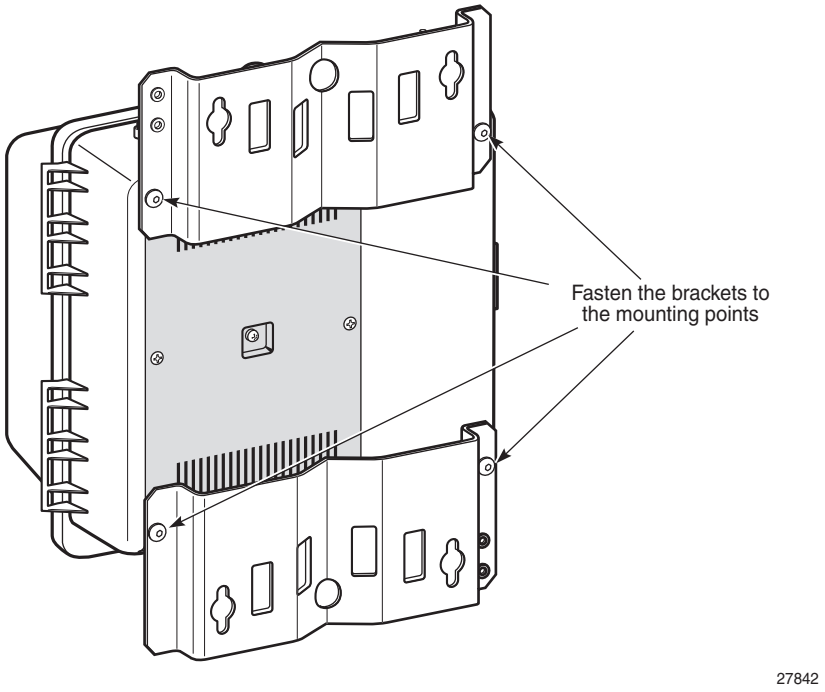

Step 2. Mount the enclosure on a pole or wall.

a. To mount the enclosure on a pole using banding straps:

i. Attach the banding straps to the bracket. Run the straps through the bracket openings, top and bottom, as shown in Figure 49.

© 2022-2023 Nokia. Nokia Confidential Information
Use subject to agreed restrictions on disclosure and use.

Figure 49 **Attaching the Banding Straps to the Bracket**

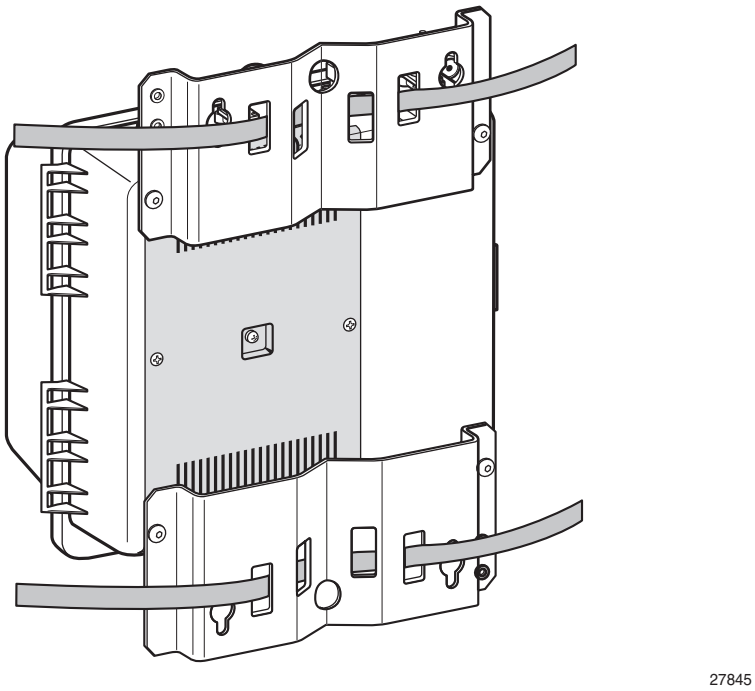

ii. Secure the enclosure to the pole using the banding straps; use the tightness recommended by the banding tool manufacturer. See Figure 50.

© 2022-2023 Nokia. Nokia Confidential Information
Use subject to agreed restrictions on disclosure and use.

Figure 50 **Securing the Enclosure To the Pole**

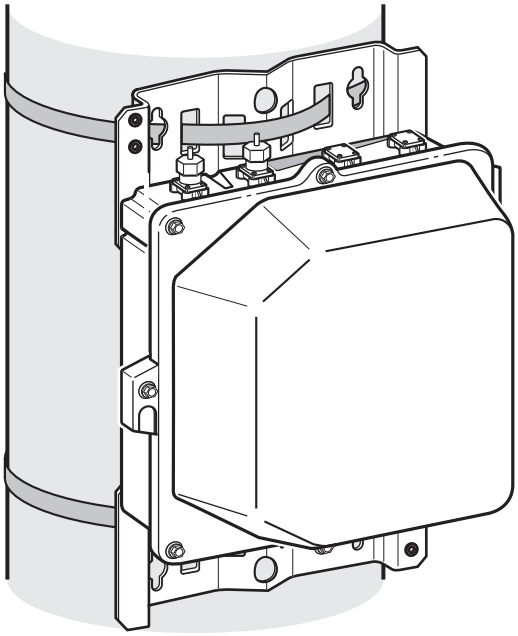

27843

b. To mount the enclosure on a pole using lag screws:

   i. Run a lag screw through the top center mounting hole of the bracket assembly and one screw through the bottom center hole and torque the screws into the pole. Ensure the lag screws are fully seated.

c. To mount the enclosure on a wall:

   i. If you are installing the enclosure on drywall or other soft material, attach a hardwood board (such as plywood) to at least two wall studs, using the recommended wood screws, then install the bracket on the board using the four keyhole-type holes. Use screws and washers suitable for the wall on which the enclosure is being mounted. Use a torque of 34 to 36 in-lb (3.8 to 4.0 N.m). Do not over-tighten.

   ii. If you are installing the chassis on a concrete or brick wall, use lag bolts and anchors. Use a torque of 34 to 36 in-lb (3.8 to 4.0 N.m). Do not over-tighten. Figure 51 shows the enclosure being installed on a brick wall.

© 2022-2023 Nokia. Nokia Confidential Information
Use subject to agreed restrictions on disclosure and use.

Figure 51 **Installing the Enclosure On a Brick Wall**

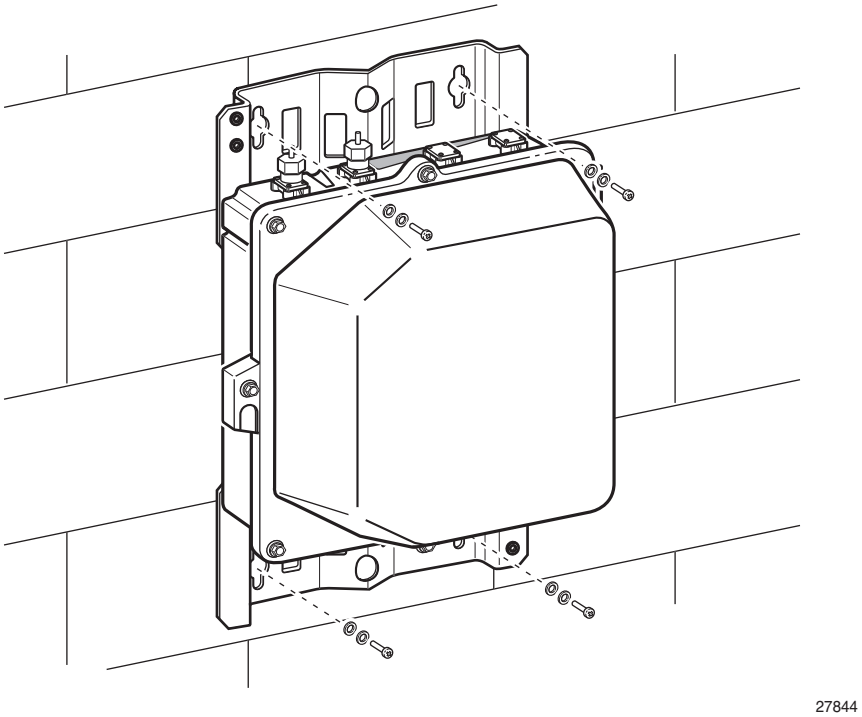

Step 3. Ground the chassis and the enclosure. Figure 52 shows the grounding point on a 7705 SAR-Hm; Figure 53 shows the grounding point on a 7705 SAR-Hmc.

a. Inside the enclosure, connect the chassis ground to the enclosure ground using a suitable gauge wire.

b. Connect main ground to the mounting bracket using the two-hole lug,

© 2022-2023 Nokia. Nokia Confidential Information
Use subject to agreed restrictions on disclosure and use.

Figure 52 **Performing the Grounding on a 7705 SAR-Hm**

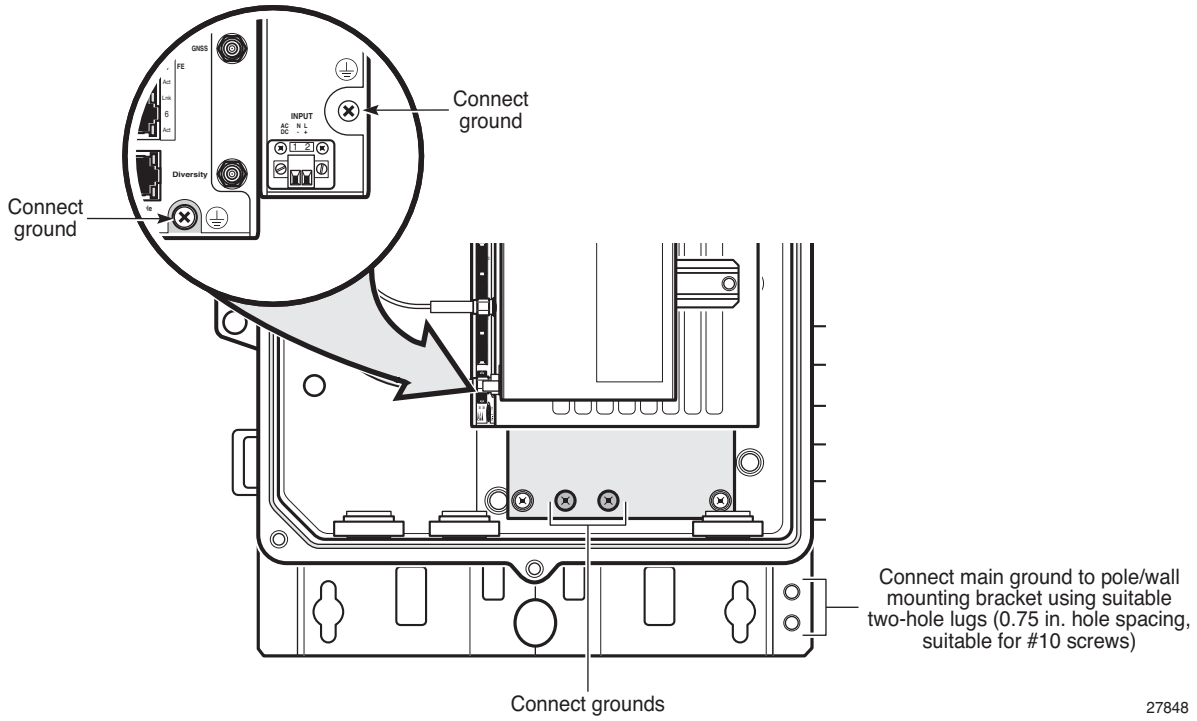

© 2022-2023 Nokia. Nokia Confidential Information
Use subject to agreed restrictions on disclosure and use.

Figure 53 **Performing the Grounding on a 7705 SAR-Hmc**

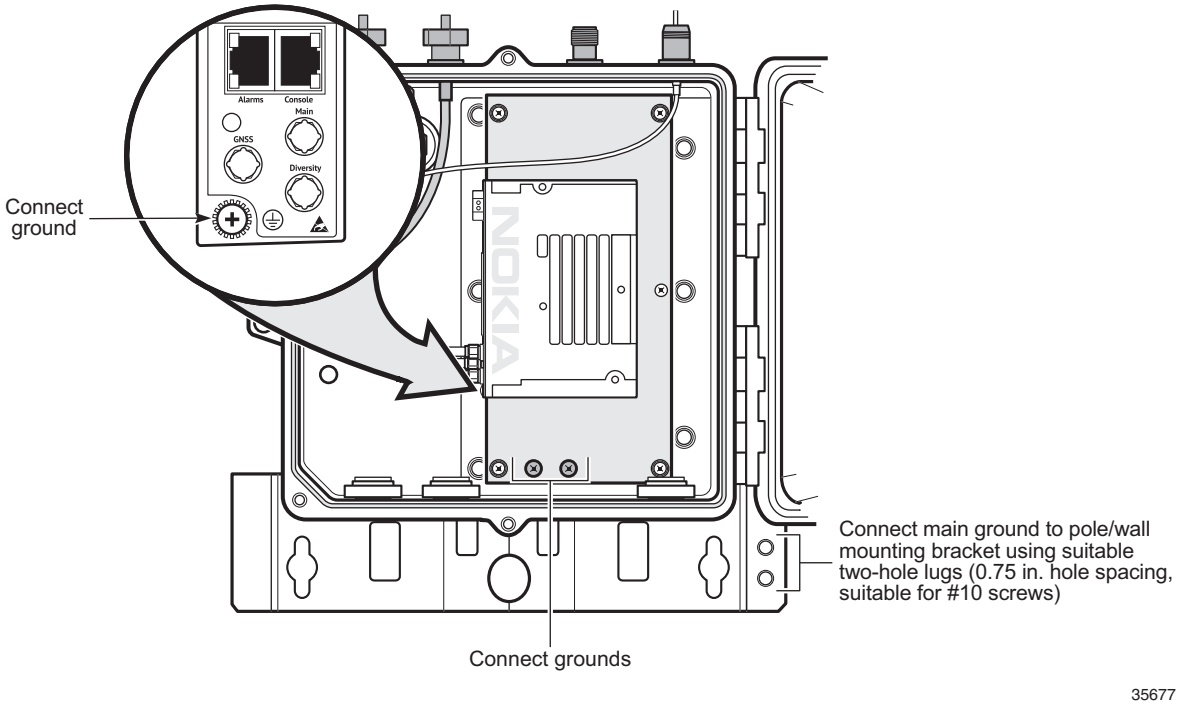

© 2022-2023 Nokia. Nokia Confidential Information
Use subject to agreed restrictions on disclosure and use.

© 2022-2023 Nokia. Nokia Confidential Information
Use subject to agreed restrictions on disclosure and use.

8 Installing and Grounding Outdoor Antennas

8.1 In This Chapter

This chapter provides information about installing and grounding the cellular, GNSS, GPS, and WiFi antennas. The topics include:

- Warnings and Notes
- Installing and Grounding Outdoor Cellular Antennas
- Installing and Grounding the Outdoor GPS/GLONASS Antenna
- Installing and Grounding WLAN Outdoor Antennas
- Grounding Outdoor Antennas

© 2022-2023 Nokia. Nokia Confidential Information
Use subject to agreed restrictions on disclosure and use.

8.2 Warnings and Notes

Warning: The following warnings apply to RF, GNSS, GPS, and WiFi antennas unless indicated otherwise.

- Each antenna must be installed such that it is not the highest point in an installation. The antenna must not be a lightning rod.
- Do not install the antenna directly under structures that may accumulate or shed snow or ice.
- All external cable connectors must be at least IP67 rated (total protection against dust and protection against submersion in water).
- The antenna must be within the protective cone of any grounded structure such as a nearby antenna tower or ancillary lightning rod. The protective cone is the area between the circumference of a circle with a 150 ft (45.7 m) radius that tangentially touches the ground and the side or top of the grounded structure, as shown in Figure 54. The percentage of protection for the protective cone area is 96%.
- If the antenna is mounted to the side of an antenna tower above the 150 ft (45.7 m) point, horizontal lightning rods must be employed such that the antenna is outside of the area of a 150 ft (45.7 m) sphere that touches both lightning rods and between both rods, as shown in Figure 55.
- If the antenna is mounted on a separate pole or structure near an antenna tower or other grounded structure, and the distance from the pole or structure to the antenna tower or other grounded structure is less than the height of the pole divided by 6, the pole or structure and the antenna tower must be bonded together to eliminate possible arcing during a lightning strike.
- The antenna site must be grounded with an integrated (multipoint) grounding system. The equipment is susceptible to lightning surges due to its construction. It is imperative that all equipment in the antenna site be properly grounded and that a low impedance path to earth (10 Ω or less) be provided. Grounding conductors must be as straight and short as possible. No sharp bends or loops are permitted in grounding conductors.
- Grounding of the antenna feeder cable outer shield must be performed as instructed by the ground kit (shield tap kit) manufacturer.
- The antenna cable shield must be bonded at one point minimum near the equipment, provided that the antenna is installed in the protected zone with less than 60 ft (18.3 m) of coaxial cable.
- If the coaxial cable run along the tower is 60 ft (18.3 m) or longer, the coaxial cable shield must be grounded at multiple points near the antenna and the equipment every 100 ft (30 m).
- A primary surge protector must be installed at the GNSS or GPS antenna cable terminated at the antenna cable support structure.
- Surge protectors are optional on RF and WiFi antennas.
- The surge protector must be bonded to a nearby ground bus bar that is connected directly to the grounding electrode system at two points.

© 2022-2023 Nokia. Nokia Confidential Information
Use subject to agreed restrictions on disclosure and use.

Note: Also observe the Dangers and Warnings in the Mandatory Regulations and Site Preparation chapters before performing this procedure.

Figure 54 **Lightning Protection Area for Ground Installation**

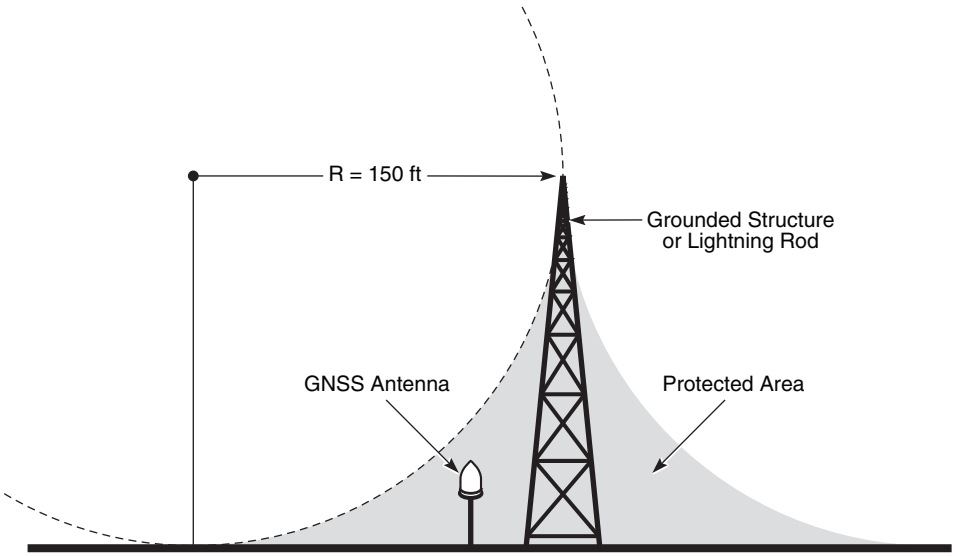

24283

Figure 55 **Lightning Protection Area for Tower Installation**

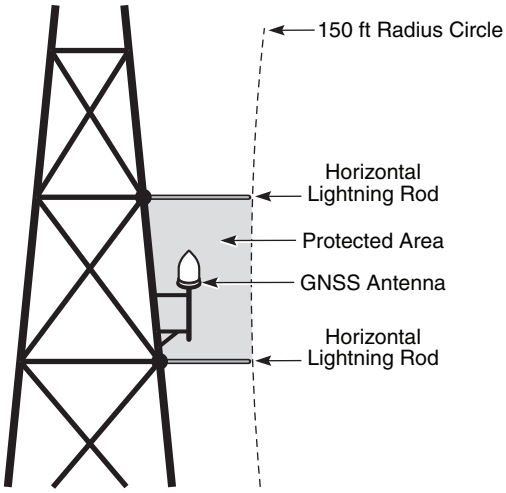

24284

© 2022-2023 Nokia. Nokia Confidential Information
Use subject to agreed restrictions on disclosure and use.

Caution:

- The GNSS/GPS or RF outdoor antenna installation site should be chosen such that it is not in a direct radiation pattern of the site transmit antennas, and situated such that no other antennas, microwave transmit dishes, and other sources of RF radiation that could affect reception are in close proximity.

  The GNSS/GPS antenna can be mounted next to the WiFi antenna on the 7705 Outdoor Enclosure. The GNSS/GPS antenna must not be located within 10 ft (3 m) horizontally and vertically from the 7705 SAR-Hm or 7705 SAR-Hmc LTE antenna and any other active transmitter, excluding the WiFi antenna.
- All grounding system material (cable, connectors, buses) must be of high quality materials that resist deterioration and require little or no maintenance.
- All antenna cable runs must be appropriately supported in accordance with the connector and cable manufacturer's instructions.
- Antenna cable sweeps must be performed prior to the start of the installation.
- Ensure that additional attenuation caused by splitter use is accounted for in the antenna power budget; see the power loss calculations for the GPS/GNSS antennas in the Making Outdoor Antenna and Cable Connections.

Note:

- The installer is responsible for providing the materials and arranging for the construction of the antenna site and path from the antenna to the chassis during site preparation. This includes any required grounding, surge protection, and additional equipment in the path, and any necessary support structures from the antenna to the chassis.

© 2022-2023 Nokia. Nokia Confidential Information
Use subject to agreed restrictions on disclosure and use.

8.3 Installing and Grounding Outdoor Cellular Antennas

For long-range applications and maximum coverage, Nokia recommends that antennas be mounted outdoors and connected with low-loss, shielded LDF4 coaxial cable. The maximum cable loss must not exceed 1.5 dB. Do not mount antennas in close proximity to each other.

Use only antennas and cables recommended by Nokia.

8.3.1 Outdoor Commercial Antennas

Note: Installation instructions are shipped with each antenna.

The following commercial 2G/3G/4G cellular antennas are available from Nokia for use with the 7705 SAR-Hm and 7705 SAR-Hmc:

- Omni-directional antenna with mounting bracket (3HE12343AA). See Outdoor 2G/3G/4G Omni-directional Antenna Installation Overview.
- Directional antenna with mounting bracket (3HE12344AA). See Outdoor 2G/3G/4G Directional Antenna Installation Overview.

8.3.1.1 Outdoor 2G/3G/4G Omni-directional Antenna Installation Overview

The Outdoor 2G/3G/4G omni-directional Antenna (3HE12343AA) is shipped with a mounting bracket, U-bolts, and fastening hardware that can be used to mount the antenna on a mast up to 2.5 in. (6.35 cm) O.D. The antenna is equipped with two N-Type (female) connectors. Figure 56 shows the antenna, its measurements, and the mounting hardware.

See Outdoor 2G/3G/LTE Omni-directional Antenna Specifications for more information.

© 2022-2023 Nokia. Nokia Confidential Information
Use subject to agreed restrictions on disclosure and use.

Figure 56 **Outdoor 2G/3G/4G Omni-directional Antenna**

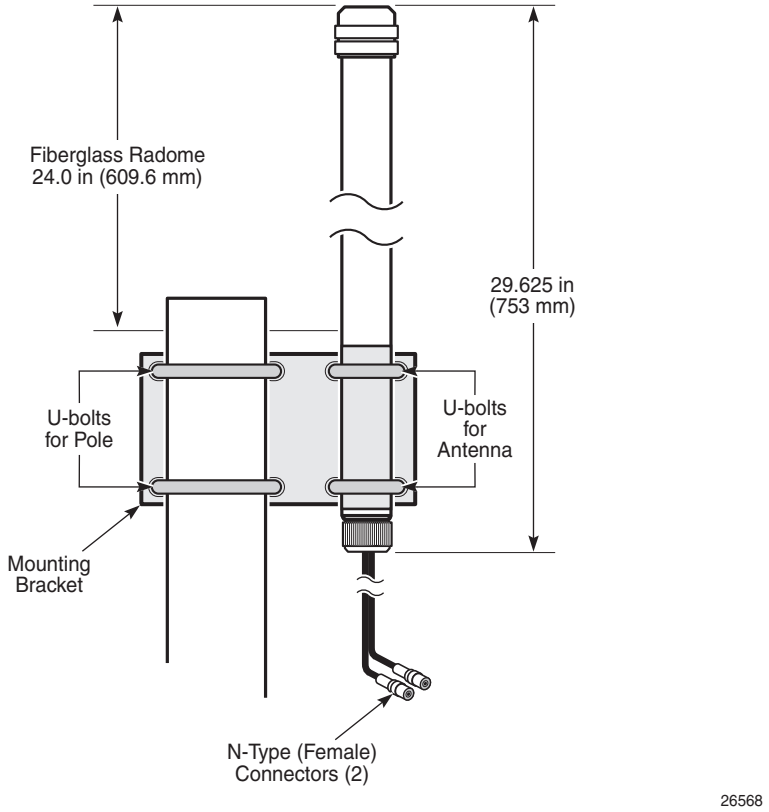

8.3.1.2 Outdoor 2G/3G/4G Directional Antenna Installation Overview

The Outdoor 2G/3G/4G Directional Antenna (3HE12344AA) is shipped with a heavy-duty articulating mounting bracket that supports horizontal polarization, vertical polarization, or a 45º diagonal slant. The bracket is fixed with pipe clamps to a mast measuring 1.63 to 2.3 in. (4.14 to 5.84 cm) O.D. The antenna is equipped with two N-Type (female) connectors. Figure 57 shows the antenna, its measurements, and the mounting hardware.

See Outdoor 2G/3G/LTE Directional Antenna Specifications for more information.

© 2022-2023 Nokia. Nokia Confidential Information
Use subject to agreed restrictions on disclosure and use.

Figure 57 **Outdoor 2G/3G/4G Directional Antenna**

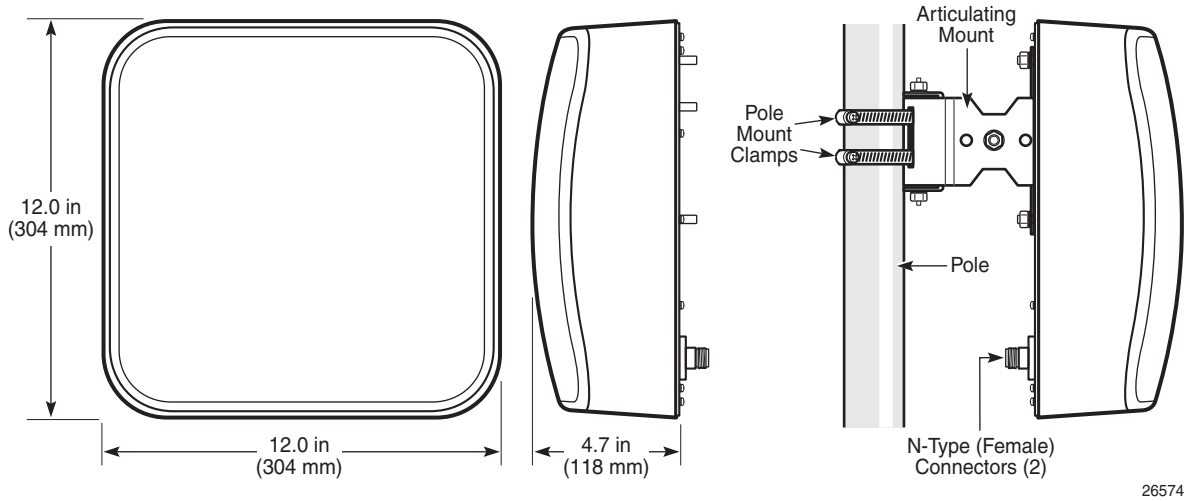

8.3.2 LTE Indoor/Outdoor Application

This section describes the recommended installation when the RF cabling is run from a 7705 SAR-Hm or 7705 SAR-Hmc that is installed in an existing building structure to an outdoor cellular antenna. Figure 58 shows the application.

See LTE Antenna Installation Accessory Kits for additional planning information.

© 2022-2023 Nokia. Nokia Confidential Information
Use subject to agreed restrictions on disclosure and use.

Figure 58 **LTE Antenna Indoor/Outdoor Application**

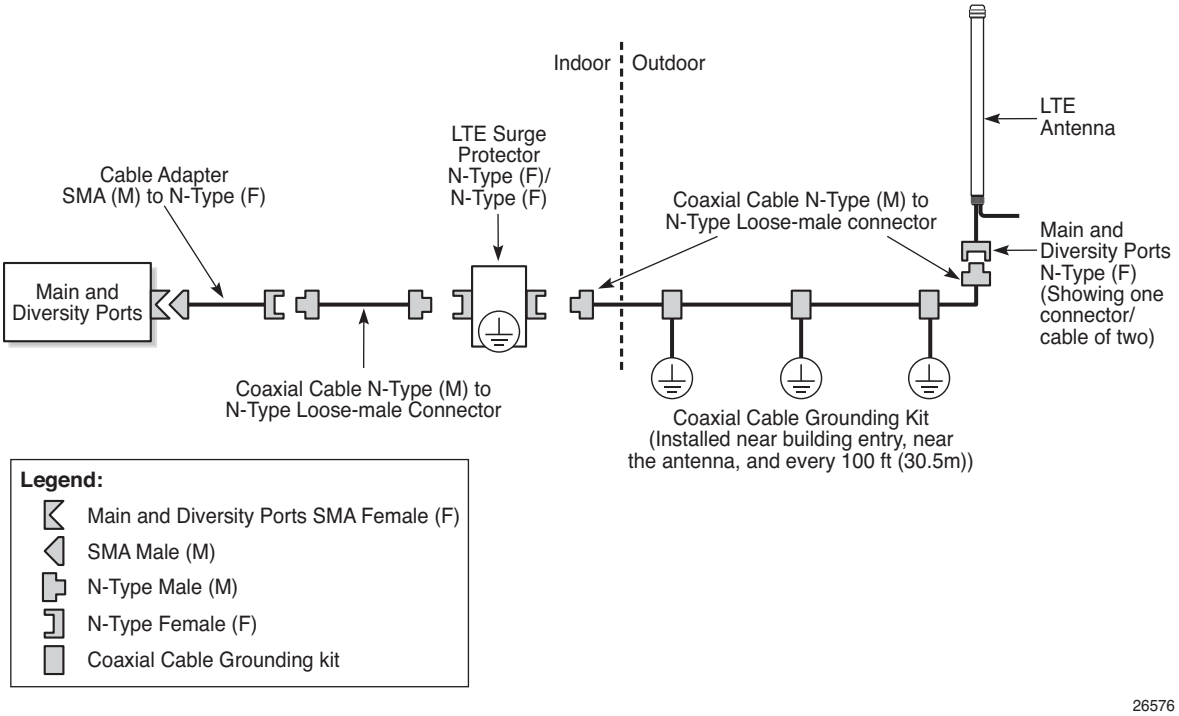

8.3.3 LTE Outdoor Enclosure Application

Figure 59 shows the recommended installation for the RF cables that enter the 7705 Outdoor Enclosure. The primary surge protector is optional. See LTE Antenna Installation Accessory Kits for additional planning information.

© 2022-2023 Nokia. Nokia Confidential Information
Use subject to agreed restrictions on disclosure and use.

Figure 59 **LTE Outdoor Enclosure Application**

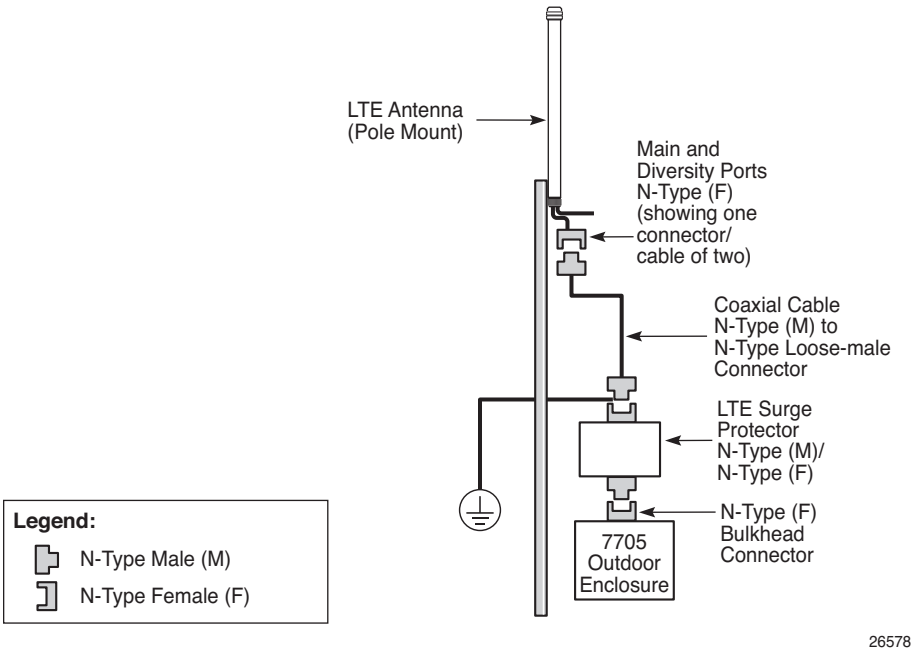

8.3.4 LTE Antenna Installation Accessory Kits

Table 44 lists the LTE antenna installation accessory kits that are available from Nokia. The kits are suitable for indoor and outdoor installations. Kits must be ordered separately.

The LDF4-50A coaxial cable kits are available with N-Type (male) connectors or with 4.3-10 (male) connectors. All cables are terminated at one end with a male connector. Each cable is shipped with a loose, field-installed male connector for the other end so that the cable can be cut and terminated to the required length.

For aerial installations, if the I/O electrical connection between the 7705 SAR-Hm and a radio antenna is local (on the same structure), surge protectors are not required but the systems must be grounded to the same ground rod. If the radio or GNSS or GPS antenna is on a different structure (such as a pole or rooftop), it is highly recommended that an outdoor surge protection device be installed on the 7705 SAR-Hm or 7705 SAR-Hmc electrical ports and the radio electrical ports.

© 2022-2023 Nokia. Nokia Confidential Information
Use subject to agreed restrictions on disclosure and use.

Table 44 **LTE Antenna Installation Accessory Kits**

Nokia Part Number	Description	Comments
3HE12350AA	LDF4 RF Cable N-Male (25 ft/7.6 m)	Cable, LDF4-50A 1/2 in. cable; N-Type (male) to N-Type (male), loose, 25 ft (7.6 m)
3HE12350BA	LDF4 RF Cable N-Male (50 ft/15 m)	Cable, LDF4-50A 1/2 in. cable; N-Type (male) to N-Type (male), loose, 50 ft (15 m)
3HE12350CA	LDF4 RF Cable N-Male (100 ft/30.5 m)	Cable, LDF4-50A 1/2 in. cable; N-Type (male) to N-Type (male), loose, 100 ft (30.5 m)
3HE12351AA	LDF4 RF Cable 4.3-10 Male (25 ft/7.6 m)	Cable, LDF4-50A 1/2 in. cable; 4.3-10 (male) to 4.3-10 (male), loose, 25 ft (7.6 m)
3HE12351BA	LDF4 RF Cable 4.3-10 Male (50 ft/15 m)	Cable, LDF4-50A 1/2 in. cable; 4.3-10 (male) to 4.3-10 (male), loose, 50 ft (15 m)
3HE12351CA	LDF4 RF Cable 4.3-10 Male (100 ft/30.5 m)	Cable, LDF4-50A 1/2 in. cable; 4.3-10 (male) to 4.3-10 (male), loose, 100 ft (30.5 m)
3HE12353AA	LDF4 Coaxial Ground Kit	1/2 in. RF coaxial grounding kit (includes grounding clamp and cable; butyl rubber tape; PVC tape)
3HE12354AA	LTE Surge Protector 4.3-10 Male	LTE Surge Protector (4.3-10/male to 4.3-10/female) for an outdoor enclosure
3HE12355AA	LTE Surge Protector N-Female	LTE Surge Protector (N/female to N/female) for indoor to outdoor applications
3HE12356AA	LTE Surge Protector N-Male to N-Female	LTE Surge Protector (N/male to N/female) for an outdoor enclosure
3HE12318AA	LMR240 Cable SMA RA to N-Female	Cable, LMR240, with an SMA to N-Type (female) connector, 1 m
3HE12451AA	LDF4 Cable Strip Tool	Cable stripping tool

© 2022-2023 Nokia. Nokia Confidential Information
Use subject to agreed restrictions on disclosure and use.

8.4 Installing and Grounding the Outdoor GPS/ GLONASS Antenna

Refer to the GNSS Installation Guide for information on antenna offerings, cable installation kits, and installation.

© 2022-2023 Nokia. Nokia Confidential Information
Use subject to agreed restrictions on disclosure and use.

8.5 Installing and Grounding WLAN Outdoor Antennas

Nokia supports WiFi omni-directional antennas, WiFi directional antennas, and vehicle mount LTE/WiFi/GNSS outdoor antennas

The 3HE12346AA outdoor WiFi omni-directional antenna has an N-Type (male) connector that is used for applications where the antenna needs to be mounted directly to the N-Type (female) bulkhead adapter on the 7705 Outdoor Enclosure. Figure 60 shows the 3HE12346AA antenna, its measurements, and its N-Type (male) connector.

Figure 60 **3HE12346AA Outdoor WiFi Omni-directional Antenna**

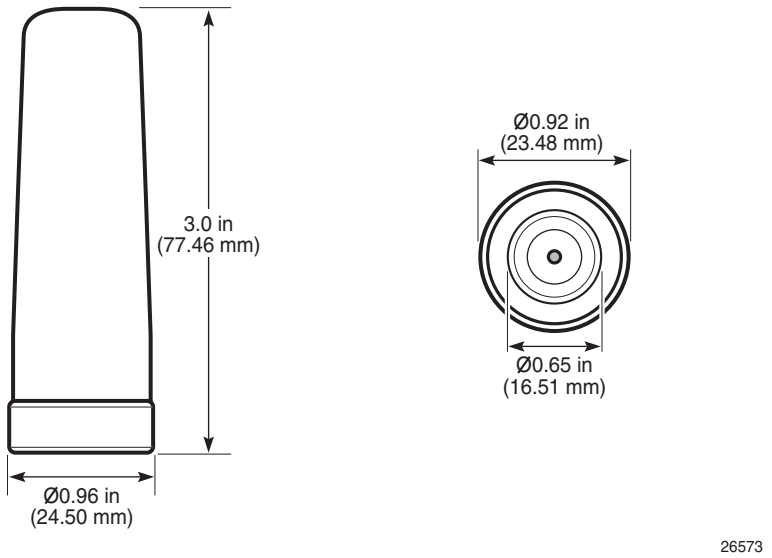

The 3HE12346AB, 3HE12346AC, and 3HE12346AD outdoor WiFi omni-directional antennas have an N-Type (female) connector and can easily interface with one of the LDF4 cable kits or LTE surge protectors to the 7705 SAR-Hm or 7705 SAR-Hmc, or to the 7705 Outdoor Enclosure. Figure 61 shows a generic view of the 3HE12346AB, 3HE12346AC, and 3HE12346AD WiFi omni-directional antennas.

The antennas are supplied with a mast mount kit used for mast mounting. Figure 62 shows a generic view of the antennas with a mast mount bracket.

© 2022-2023 Nokia. Nokia Confidential Information
Use subject to agreed restrictions on disclosure and use.

Figure 61 **3HE12346AB/AC/AD Outdoor WiFi Omni-directional Antennas**

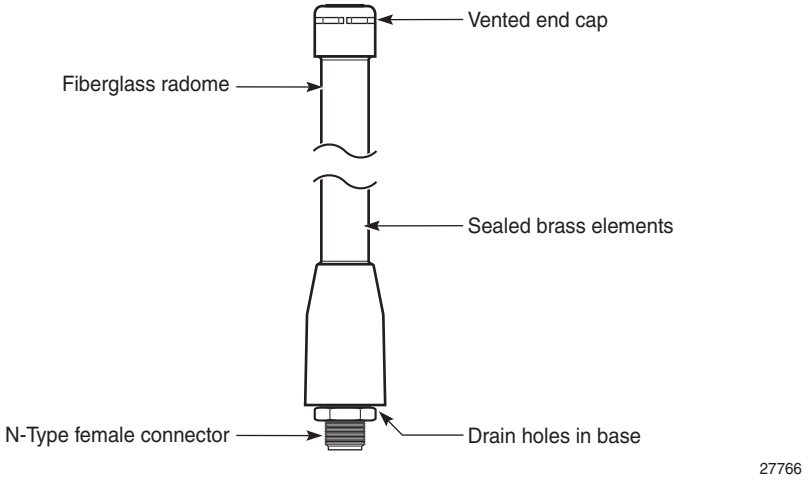

Figure 62 **3HE12346AB/AC/AD Outdoor WiFi Omni-directional Antennas with a Mast Mount Bracket**

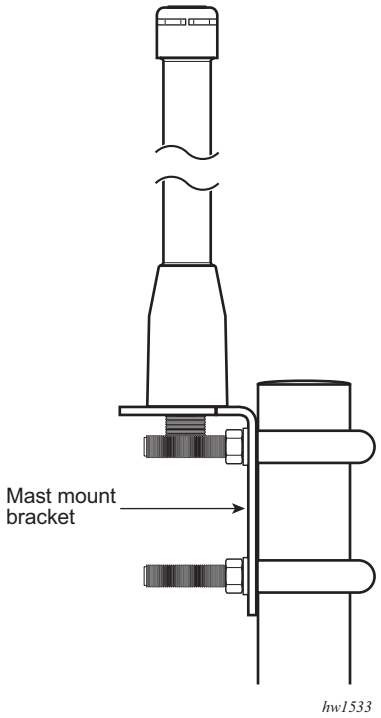

See Outdoor WiFi Omni-directional Antenna Specifications for more information.

© 2022-2023 Nokia. Nokia Confidential Information
Use subject to agreed restrictions on disclosure and use.

The 3HE12424AA outdoor WiFi directional antenna has a coaxial pigtail N-Type (female) connector and can easily interface with one of the LDF4 cable kits or LTE surge protectors to the 7705 SAR-Hm or 7705 SAR-Hmc, or to the 7705 Outdoor Enclosure. Figure 63 shows the antenna, its measurements, and its N-Type (female) connector.

The antenna is supplied with a mast mount kit used for mast mounting. Figure 64 shows the antenna with a mast mount bracket.

See Outdoor WiFi Directional Antenna Specifications for more information.

Figure 63 **3HE12424AA Outdoor WiFi Directional Antenna**

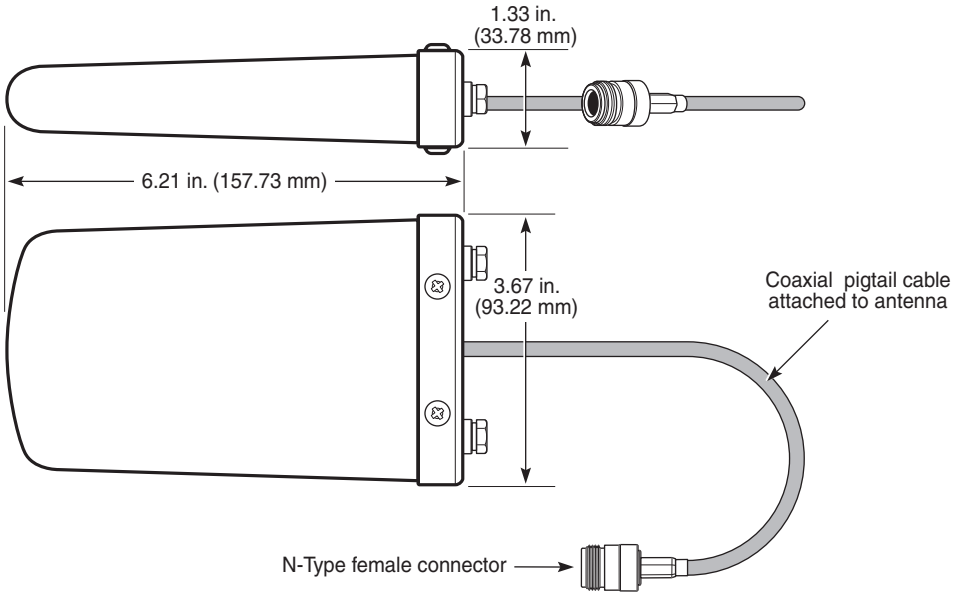

© 2022-2023 Nokia. Nokia Confidential Information
Use subject to agreed restrictions on disclosure and use.

Figure 64 **3HE12424AA Outdoor WiFi Directional Antenna with a Mast Mount Bracket**

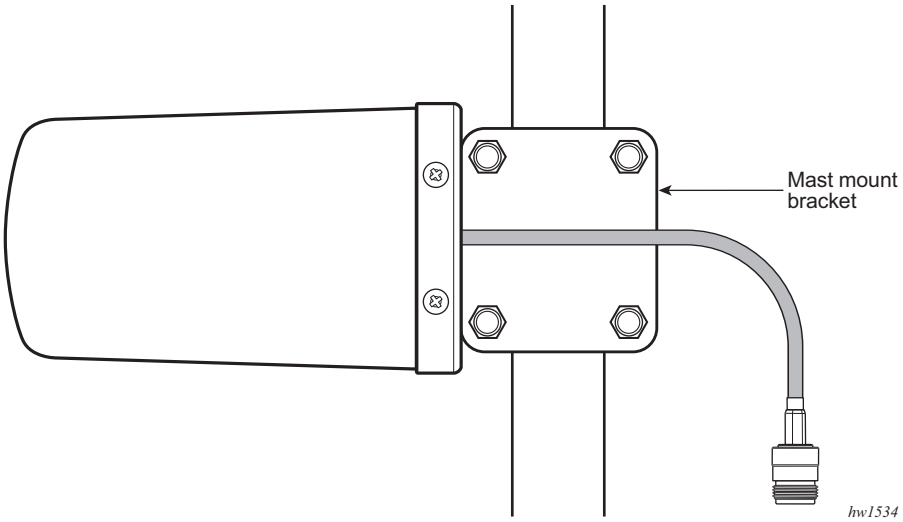

The vehicle mount outdoor LTE/WiFi/GNSS antennas with part numbers 3HE13569AA and 3HE13569AB can be directly mounted on the roof of a vehicle. The antenna with part number 3HE13569AA has an attached N-Type (LTE/WiFi/GPS) (male) connector. The antenna with part number 3HE13569AB has an attached SMA (LTE/GPS) (male) connector and an attached RP-SMA (WiFi) (male) connector. Figure 65 shows the antennas, the measurements, and N-Type (male) connector.

See Vehicle Mount LTE/WiFi/GNSS Antenna Specifications for more information.

© 2022-2023 Nokia. Nokia Confidential Information
Use subject to agreed restrictions on disclosure and use.

Figure 65 **Vehicle Mount Outdoor LTE/WiFi/GNSS Antenna**

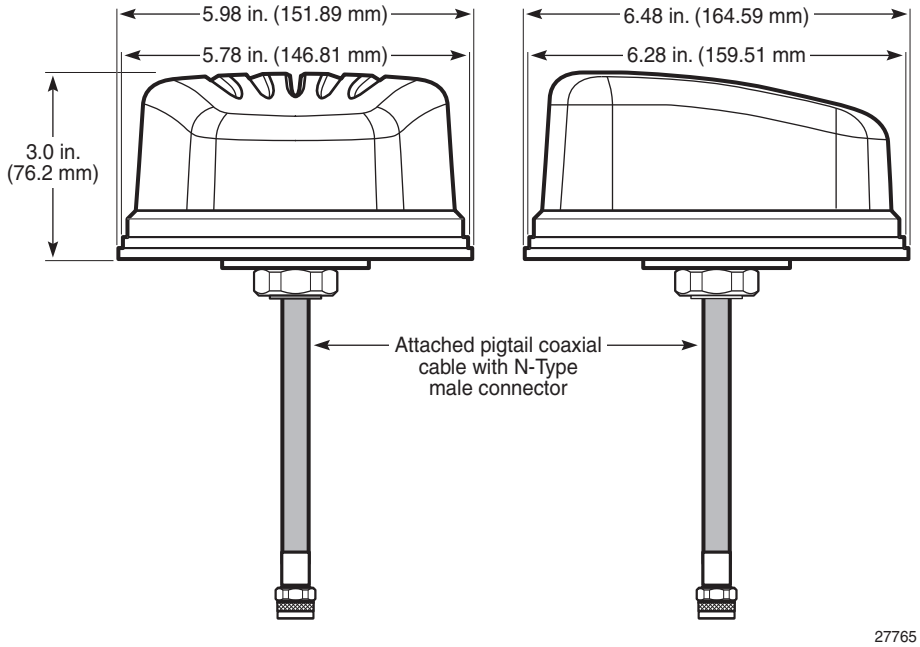

8.5.1 WLAN Indoor/Outdoor and Outdoor Applications

The WLAN ports can be installed in the same fashion as the LTE ports, by using the LDF4 cable kits.

Refer to LTE Indoor/Outdoor Application and LTE Outdoor Enclosure Application for more details.

© 2022-2023 Nokia. Nokia Confidential Information
Use subject to agreed restrictions on disclosure and use.

8.6 Grounding Outdoor Antennas

This section describes how to connect the ground wire for the external antennas to earth ground when the 7705 SAR-Hm or 7705 SAR-Hmc chassis is installed indoors in a hut or building.

The ground wire is not provided. The length of the ground wire depends on the location of the chassis and proximity to the proper grounding facilities.

8.6.1 Antenna Coaxial Cable Shield Grounding

The following content and images are the Grounding and Lightning Protection Guidelines for Network Wireless System Cell Sites.

The RF antenna (coaxial) cable shields are primary conductors of lightning surges and must be bonded at the top and bottom of a vertical run for lightning protection.

The RF antenna cable shield must be bonded to the tower metallic structure (if permitted by the tower owner), or to a copper ground bus bar at the top and lowermost portion of a vertical run, just before the vertical run bends toward the horizontal plane.

The coaxial antenna cable shield on towers 200 ft (61 m) or higher must be bonded at 100 ft (30 m) intervals. Antenna cable shields must also be bonded at the building hatch plate and/or near equipment. See Figure 66 and Figure 67; Table 45 describes the key items in both figures.

The GPS antenna coaxial cable shield must also be bonded at one point (minimum) near the equipment or at the hatch plate prior to entering a building, provided that:

- the GPS antenna is installed in a protected zone
- a short coaxial cable 60 ft (18 m) or less is used

If the coaxial cable run along the tower is more than 60 ft (18 m), the coaxial cable shield must be grounded at multiple points near the antenna and equipment or hatch plate and at 100 ft (30 m) intervals.

The coaxial cable shields must be properly sealed and waterproofed after the ground connections. Ground cable runs must be kept straight and as short as possible. Sharp bends and loops are not permitted.

The ice shield bridges must be bonded at both ends. Long ice shield bridges must be bonded at approximately 20 ft (6 m) intervals.

© 2022-2023 Nokia. Nokia Confidential Information
Use subject to agreed restrictions on disclosure and use.

Figure 66 **Outdoor Coaxial Shield Grounding and Surge Protection Installation**

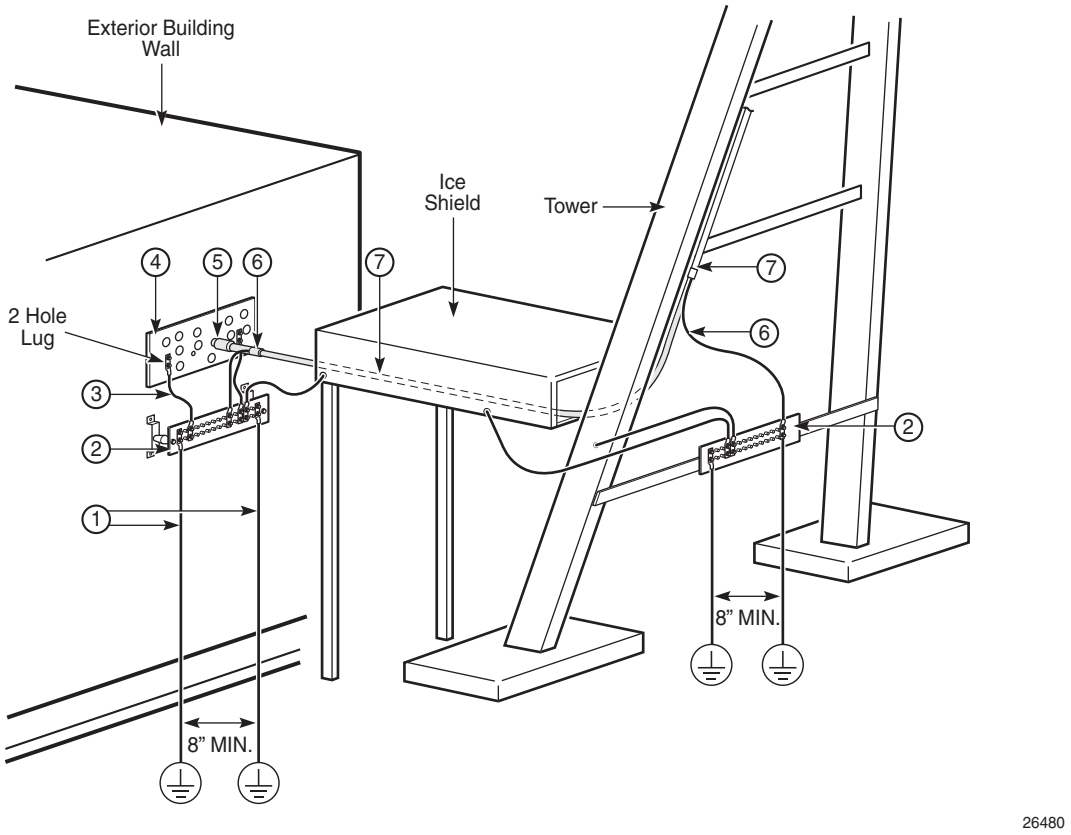

© 2022-2023 Nokia. Nokia Confidential Information
Use subject to agreed restrictions on disclosure and use.