Figure 67 **Indoor/Outdoor Coaxial Shield Grounding and Surge Protection**

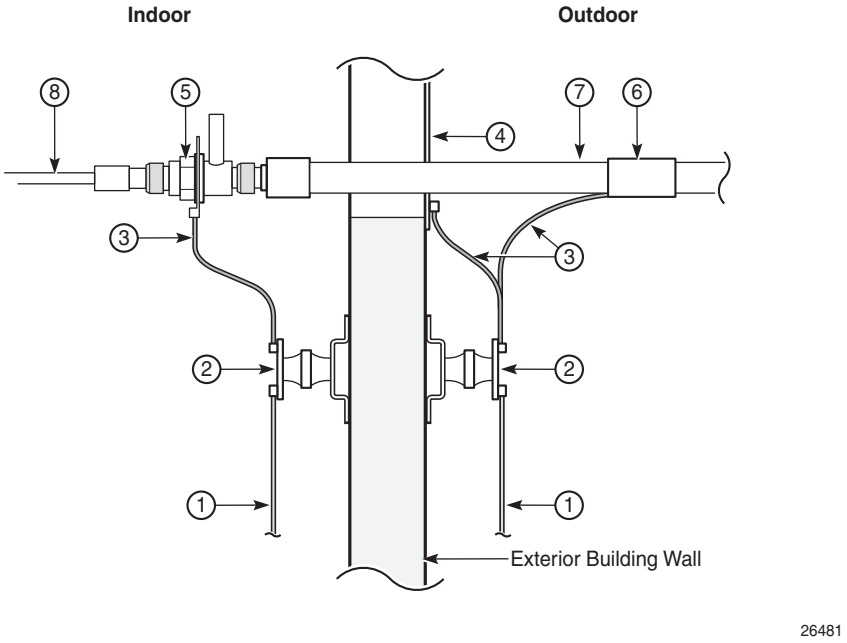

Table 45 **Indoor/Outdoor Coaxial Shield Grounding and Surge Protection**

Key	Description
1	#2 AWG bare solid tinned copper cable to ground electrode system
2	Ground bus bar, tinned copper
3	#6 AWG stranded insulated copper wire, bonded to bus bar
4	Hatch plate
5	Surge protector (indoor)
6	Coaxial cable shield grounding
7	Antenna cable
8	Antenna jumper cable (Figure 67 only)

© 2022-2023 Nokia. Nokia Confidential Information
Use subject to agreed restrictions on disclosure and use.

© 2022-2023 Nokia. Nokia Confidential Information
Use subject to agreed restrictions on disclosure and use.

9 Making Outdoor Antenna and Cable Connections

9.1 In This Chapter

This chapter describes how to connect antennas and cables to the ports on the 7705 SAR-Hm and 7705 SAR-Hmc. The topics include:

- Connecting Outdoor Cellular Antennas to the Main and Diversity Connectors
- Connecting the Outdoor WiFi Antenna to the 7705 SAR-Hm WLAN Connector
- RF Power Budget Calculations

© 2022-2023 Nokia. Nokia Confidential Information
Use subject to agreed restrictions on disclosure and use.

9.2 Connecting Outdoor Cellular Antennas to the Main and Diversity Connectors

The procedures in this section are intended as general guidelines about how to connect the cellular antenna cables to the 7705 SAR-Hm and 7705 SAR-Hmc chassis.

Site-dependent factors, such as the antenna type, installation application (building or enclosure), required cable lengths, and the number of surge protectors and connectors, must be considered. See LTE Indoor/Outdoor Application.

Note: Read the Dangers and Warnings in the Mandatory Regulations and Site Preparation chapters before performing this procedure.

9.2.1 Attaching LDF4 Coaxial Cables to an Outdoor Cellular Antenna

Caution:

- Jumper cables must be carefully and accurately aligned with the antenna connectors.
- Nokia recommends using the shortest jumper cables from the antenna in order to optimize system performance. For best results, use Nokia accessories and cables.

The Nokia-approved antennas have N-Type (female) connectors.

Choose the appropriate tools and hardware for your antenna and for your installation.

Required tools and hardware:

- torque wrench for a 4.3-10 or N-Type (male) connector coupling nut
- two lengths of LDF4-50A, 1/2 in. coaxial cable terminated at one end with either a 4.3-10 or N-Type (male) connector. See LTE Antenna Installation Accessory Kits for kit options.
- two loose 4.3-10 or N-Type cable (male) connectors
- weatherproofing kit
- cable cutters
- coaxial trimming tool

© 2022-2023 Nokia. Nokia Confidential Information
Use subject to agreed restrictions on disclosure and use.

To attach the coaxial cables to an RF antenna:

Step 1. Perform one of the following:

a. For antennas with 4.3-10 connectors

i. Align the 4.3-10 (male) connector coupling nut on the jumper cable with the female antenna connector, as shown in Figure 68.

Figure 68 **Attaching the Coaxial Cables**

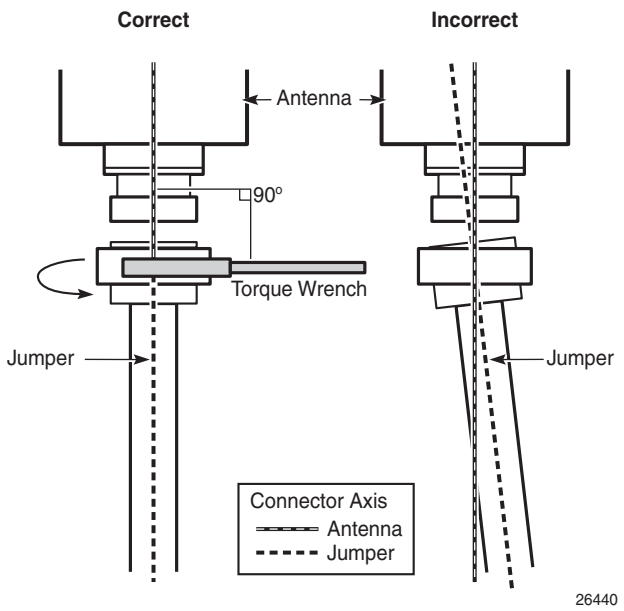

ii. Press the inner part of the jumper cable connector into the antenna connector and maintain this pressure when turning the jumper coupling nut. Once aligned, the jumper coupling nut will fit the thread of the female connector correctly and it will turn smoothly. Tighten the jumper coupling nut by hand.

iii. Use a torque wrench to tighten the connector. The torque wrench must be perpendicular to the antenna connector flange and jumper cable connector coupling nut when tightening. Torque to 8 lbf-ft (11 N·m). Do not over-tighten the connector.

b. For antennas with N-Type connectors:

i. Align the N-Type (male) connector coupling nut on the jumper cable with the female antenna connector.

© 2022-2023 Nokia. Nokia Confidential Information
Use subject to agreed restrictions on disclosure and use.

ii. Press the inner part of the jumper cable connector into the antenna connector and maintain this pressure when turning the jumper coupling nut. Once aligned, the jumper coupling nut will fit the thread of the female connector correctly and it will turn smoothly. Tighten the jumper coupling nut by hand.

iii. Use a torque wrench to tighten the connector. The torque wrench must be perpendicular to the antenna connector flange and jumper cable connector coupling nut when tightening. Torque to 8 lbf-ft (11 N·m). Do not over-tighten the connector.

Step 2. After the connector coupling nuts have been tightened as specified, insulate all connector connections using weatherproofing tape or gel-sealed closures for additional protection against harsh environmental conditions.

Step 3. For enclosure applications, perform the following steps:

i. Run the coaxial cables from the cellular antenna to the enclosure. Secure the cables to the pole or tower according to local practices.

ii. Cut the coaxial cables to the desired length.

iii. Attach the appropriate connectors to the cut ends of the coaxial cables, as described in Attaching a Connector to an LDF4 Coaxial Cable, then return to this procedure.

iv. Install the surge suppressors directly on the enclosure, as described in Installing Surge Protectors (Enclosure Application), then return to this procedure.

v. Using the appropriate jumper-adapter cables, connect the Main and Diversity bulkhead adapters on the interior of the enclosure to the SMA Main and Diversity ports on the chassis. See 7705 Outdoor Enclosure for more information.

Step 4. For indoor/outdoor applications:

i. Run the coaxial cables from the cellular antenna to the chassis. Secure the cables to the pole or tower according to local practices.

ii. Install a coaxial cable shield grounding clamp near the antenna, then at 100 ft (30.5 m) intervals, and then near the building entry. See LTE Indoor/Outdoor Application and also Antenna Coaxial Cable Shield Grounding for additional information. The LDF4-50A, 1/2 in. coaxial cable kits are listed in Table 44.

iii. Route the cables into the building and ensure that the cables are properly grounded, as described in Antenna Coaxial Cable Shield Grounding.

iv. Cut the coaxial cables to the desired length.

© 2022-2023 Nokia. Nokia Confidential Information
Use subject to agreed restrictions on disclosure and use.

v. Attach the N-Type (male) connectors to the cut ends of the coaxial cables, as described in Attaching a Connector to an LDF4 Coaxial Cable, then return to this procedure.

vi. Inside the building, install surge suppressors and complete the antenna cabling to the chassis. See Completing the Indoor Cabling (Indoor/Outdoor Application).

9.2.2 Attaching a Connector to an LDF4 Coaxial Cable

Caution: Read all instructions before assembling the connector on the LDF4-50A, 1/2 in. coaxial cable.

The following procedure applies to N-Type (male) and 4.3-10 (male) connectors.

Required tools and hardware:

- torque wrench for the N-Type (male) or 4.3-10 (male) connector coupling nut
- one loose, field-shipped, N-Type cable (male) or 4.3-10 (male) connector
- LDF4 Cable Strip Tool (3HE12451AA)
- cable knife
- measuring tape
- open-ended wrench: N-Type (19 mm, 20 mm); 4.3-10 (19 mm, 22 mm)
- flaring tool
- flat file
- LDF4 cabling kit
- weatherproofing kit

Figure 69 shows the LDF4 cable, the N-Type (male) and 4.3-10 (male) connectors, and accessories. Figure 70 shows the LDF4 Cable Strip Tool components.

© 2022-2023 Nokia. Nokia Confidential Information
Use subject to agreed restrictions on disclosure and use.

Figure 69 Coaxial Cable and Connector Kits

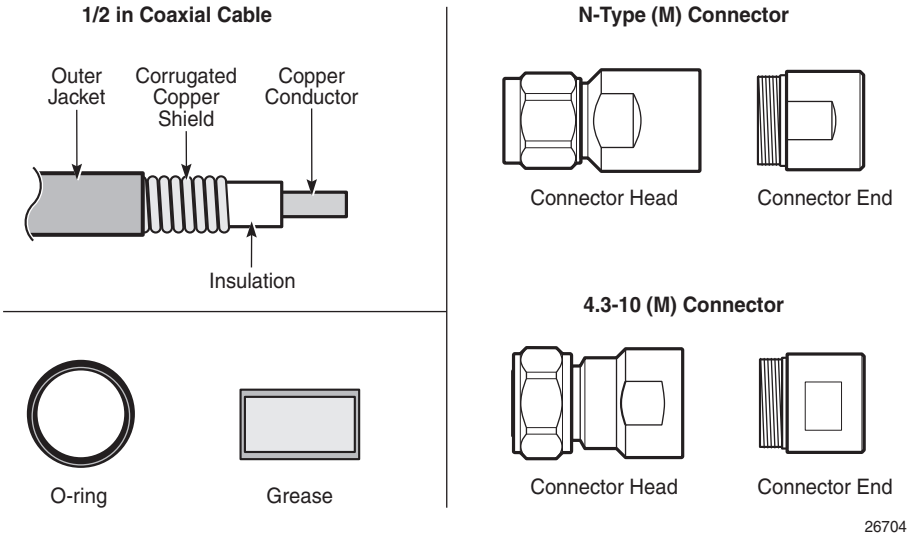

Figure 70 LDF4 Cable Strip Tool Components

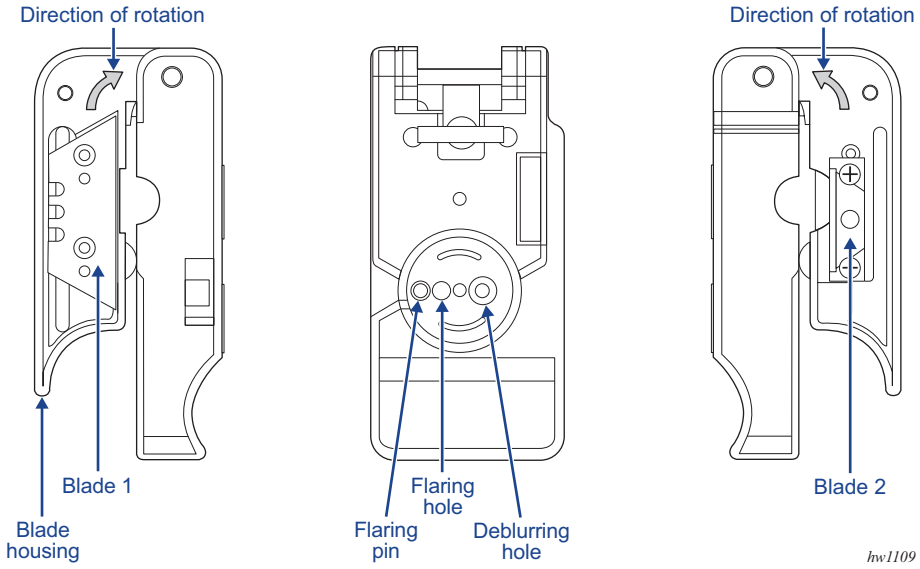

© 2022-2023 Nokia. Nokia Confidential Information
Use subject to agreed restrictions on disclosure and use.

To install an N-Type cable (male) connector or 4.3-10 (male) connector on the LDF4-50A, 1/2 in. coaxial cable:

Step 1. Prepare the cable using the LDF4 Cable Strip Tool:

i. Use a cable knife to remove 1 in. (2.54 cm) of cable jacket from the cable end. See Figure 71.

Figure 71 **Removing the Cable Jacket With A Knife**

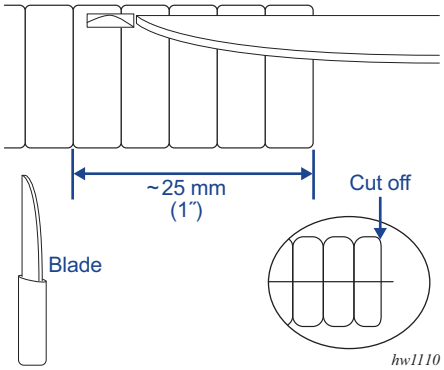

ii. Insert the cable into the cLDF4 Cable Strip Tool so that cable end is flush with the tool. See Figure 72.

Figure 72 **Inserting the Cable Into the LDF4 Cable Strip Tool**

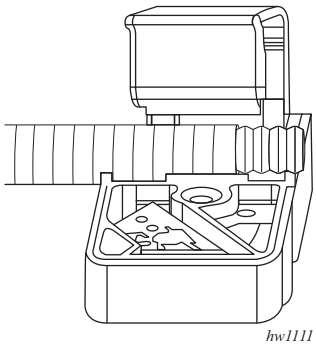

iii. Rotate the LDF4 Cable Strip Tool around the cable until the housing is completely closed. See Figure 73.

© 2022-2023 Nokia. Nokia Confidential Information
Use subject to agreed restrictions on disclosure and use.

Figure 73 **Rotating the LDF4 Cable Strip Tool Around the Cable**

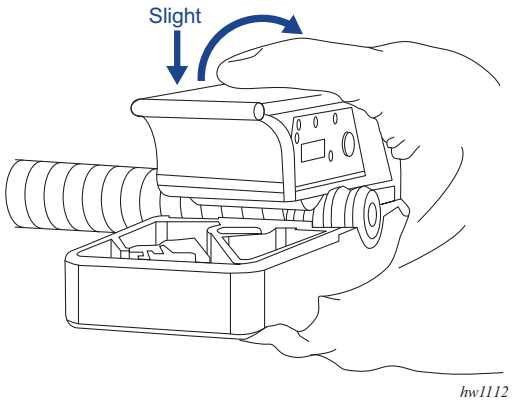

iv. Open the housing and remove the cable. Remove the cable jacket ring and remove the waste material from the inner conductor. Inspect the cable trim dimensions, they should be approximately as shown in Figure 74.

Figure 74 **Opening the Housing and Removing the Cable**

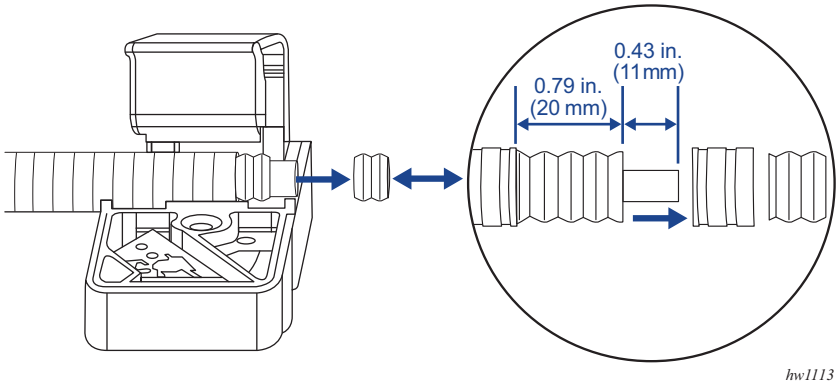

v. Insert the center conductor into the flaring hole on the LDF4 Cable Strip Tool. Rotate the tool at least one full clockwise turn to flare the outer conductor. See Figure 75.

© 2022-2023 Nokia. Nokia Confidential Information
Use subject to agreed restrictions on disclosure and use.

Figure 75 **Flaring the Outer Conductor**

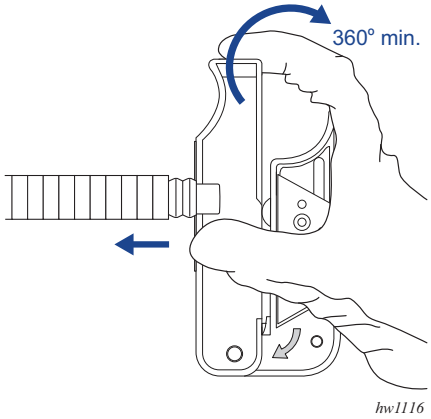

vi. Insert the center conductor into the deburring hole on the LDF4 Cable Strip Tool. Rotate the tool at least one full clockwise turn to chamfer the cable end. See Figure 76.

Figure 76 **Chamfering the Cable End**

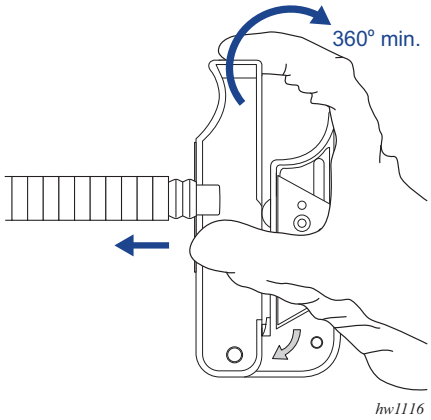

vii. Inspect the flare diameter. Ensure that the foam is fully separated and evenly spaced from the cable outer conductor. See Figure 77.

Figure 77 **Flared Cable End Diameter**

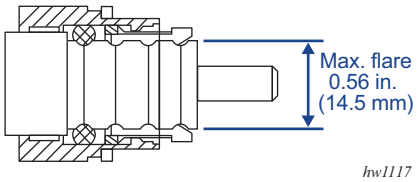

© 2022-2023 Nokia. Nokia Confidential Information
Use subject to agreed restrictions on disclosure and use.

Step 2. Install the O-ring over the corrugated shielding (see key item 1 in Figure 78) and apply grease to the O-ring.

Figure 78 **Attaching the O-ring and Connectors (Showing 4.3-10)**

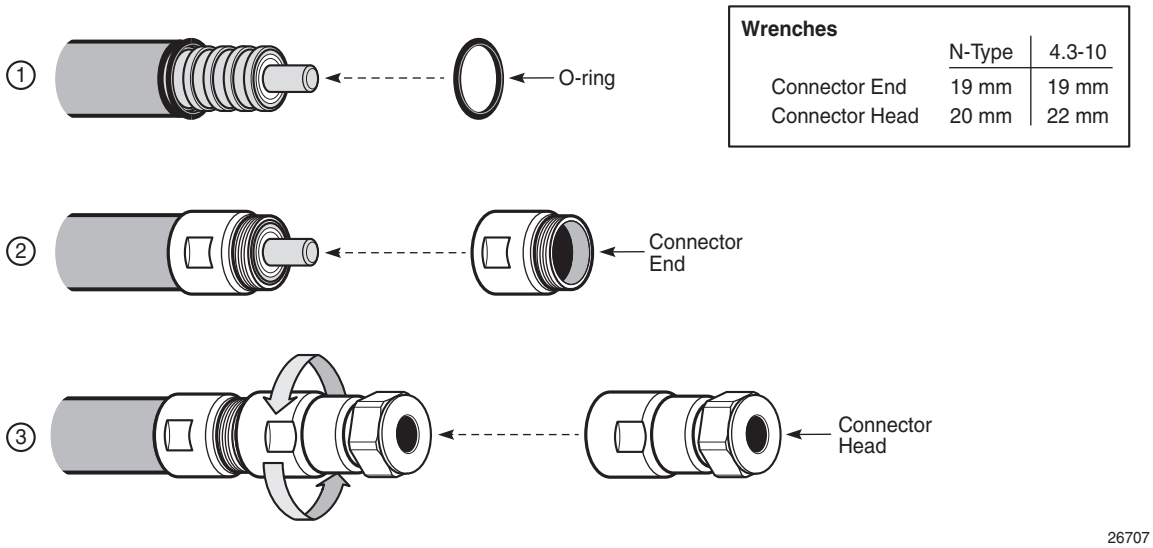

Wrenches

	N-Type	4.3-10
Connector End	19 mm	19 mm
Connector Head	20 mm	22 mm

Step 3. Attach the connector end (see key item 2 in Figure 78).

i. Insert the connector end over the corrugated sheathing. Apply pressure to the connector until it snaps into place over the corrugated sheathing.

ii. Use the flaring tool to separate the outer conductor from the insulator. Clean the conductor and the threads of the connector.

Step 4. Attach the connector head (see key item 3 in Figure 78).

i. Apply grease to the O-ring on the connector end.

ii. Screw the connector head onto the connector end.

iii. Tighten the connectors. Use the 19 mm open wrench to hold the connector end steady, then use the 20 mm (for N-Type) or 22 mm (for 4.3-10) open wrench on the connector head to tighten the connector head. The recommended torque is 18.4 lbf-ft (25 N·m).

© 2022-2023 Nokia. Nokia Confidential Information
Use subject to agreed restrictions on disclosure and use.

9.2.3 Installing Surge Protectors (Enclosure Application)

Install the surge protectors directly on the Main and Diversity bulkhead adapters on the exterior of the enclosure. Surge protectors are available for 4.3-10 male to female or N-Type male to female connectors. See Figure 79.

Figure 79 **Installing a Surge Protector on the Enclosure**

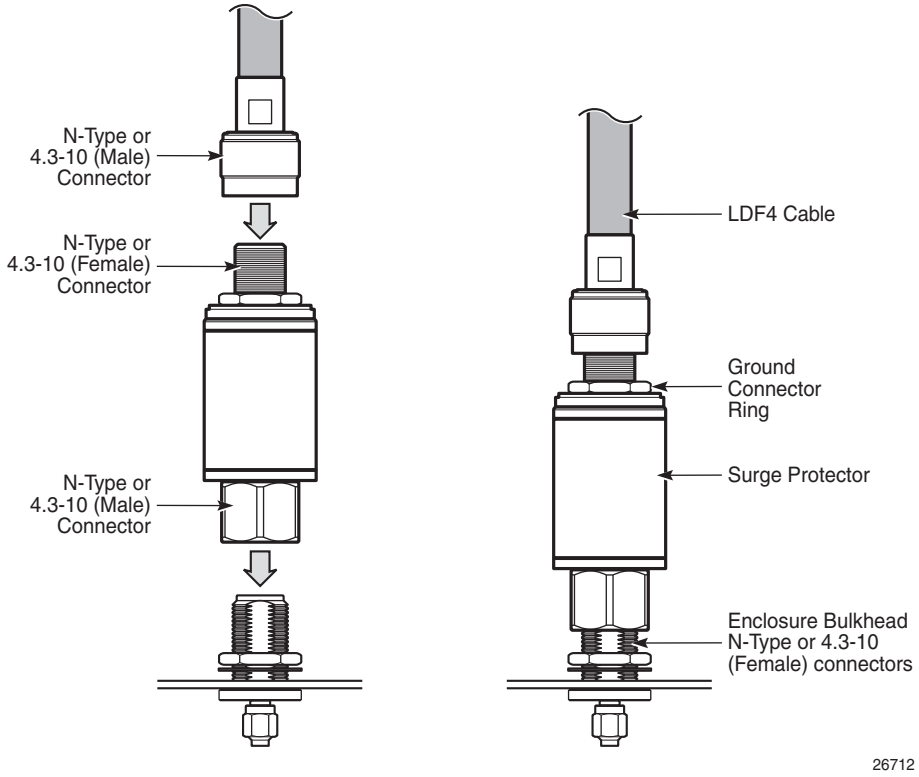

To install the surge protector directly on the enclosure:

Step 1. Attach the male connector on the surge protector to the exterior female bulkhead connector on the top of the enclosure.

Step 2. Ground the surge protector device. Follow the manufacturer's instructions on how to attach the grounding lug and grounding cable to the surge protector.

Step 3. Connect the antenna cable male connector to the female connector on the surge protector.

© 2022-2023 Nokia. Nokia Confidential Information
Use subject to agreed restrictions on disclosure and use.

Step 4. Insulate all connector connections using weatherproofing tape or gel-sealed closures for additional protection against harsh environmental conditions.

9.2.4 Completing the Indoor Cabling (Indoor/Outdoor Application)

Figure 80 shows the cables, connectors, and surge protectors that are required for the indoor cabling.

Figure 80 **Indoor Cabling and Equipment**

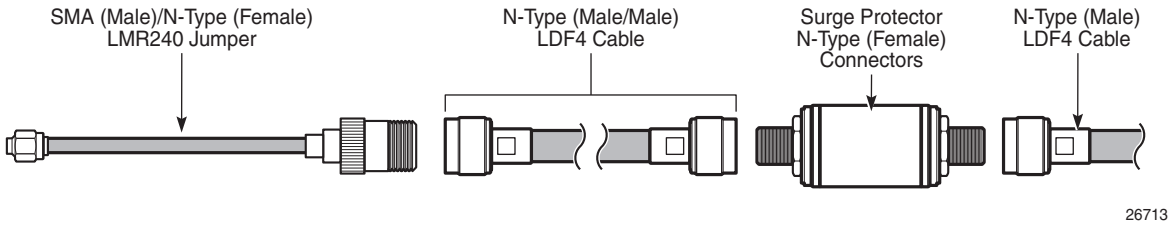

Required tools and hardware:

- two surge protectors
- two lengths of LDF4 cable N-Type (male/loose male connectors)
- two SMA (male) to N-Type (female) jumper cables

To complete the indoor cabling for the Main and Diversity antennas:

Step 1. Install an N-Type female/female surge protector on each cellular antenna cable:

i. Attach the N-Type female connector on the surge protector to the connector on the LDF4 coaxial antenna cable, as described in Attaching a Connector to an LDF4 Coaxial Cable.

ii. Prepare the surge protection device. Follow the manufacturer's instructions on how to install the grounding lug, grounding cable, and the coaxial antenna cables on the surge protector.

Step 2. Prepare the last two lengths of LDF4 cable:

i. Connect the end terminated with the N-Type male connector to the N-Type female connector on the surge protector.

ii. Route each cable to the chassis, then cut and terminate each cable with an N-Type (male) connector.

© 2022-2023 Nokia. Nokia Confidential Information
Use subject to agreed restrictions on disclosure and use.

Step 3. Use two SMA (male) to N-Type (female) jumper cables to connect the antenna cables to the 7705 SAR-Hm or 7705 SAR-Hmc chassis Main and Diversity ports:

i. Connect the N-Type (female) connector on the jumper to the N-Type (male) connector on the coaxial cable.

ii. Unscrew and remove the plastic caps from the Main and Diversity SMA ports on the chassis.

iii. Attach the SMA (male) connector on the jumpers to the ports on the chassis. Hand-tighten the connector.

9.2.5 Attaching an LDF4 Coaxial Ground Kit to an LDF4 Coaxial Cable

Use this procedure to install an LDF4 coaxial ground kit to an LDF4 coaxial cable.

Required tools and hardware:

- LDF4 coaxial ground kit (3HE12353AA). See Table 44 in the Installing and Grounding Outdoor Antennas chapter for a description of the contents of the kit.
- LDF4 coaxial cable
- cable knife

To install the two-hole lug at the end of the ground wire:

- two-hole lug
- ratchet
- wire stripping tool
- wire crimper

To install an LDF4 coaxial ground kit to an LDF4 coaxial cable:

Step 1. Carefully use a cable knife to cut a strip of about 1.5 in.(3.8 cm) from the LDF4 cable jacket; see Figure 81. Make sure not to scratch the outer conductor underneath the cable jacket when making the cut.

© 2022-2023 Nokia. Nokia Confidential Information
Use subject to agreed restrictions on disclosure and use.

Figure 81 **Cutting and Stripping the LDF4 Cable Jacket**

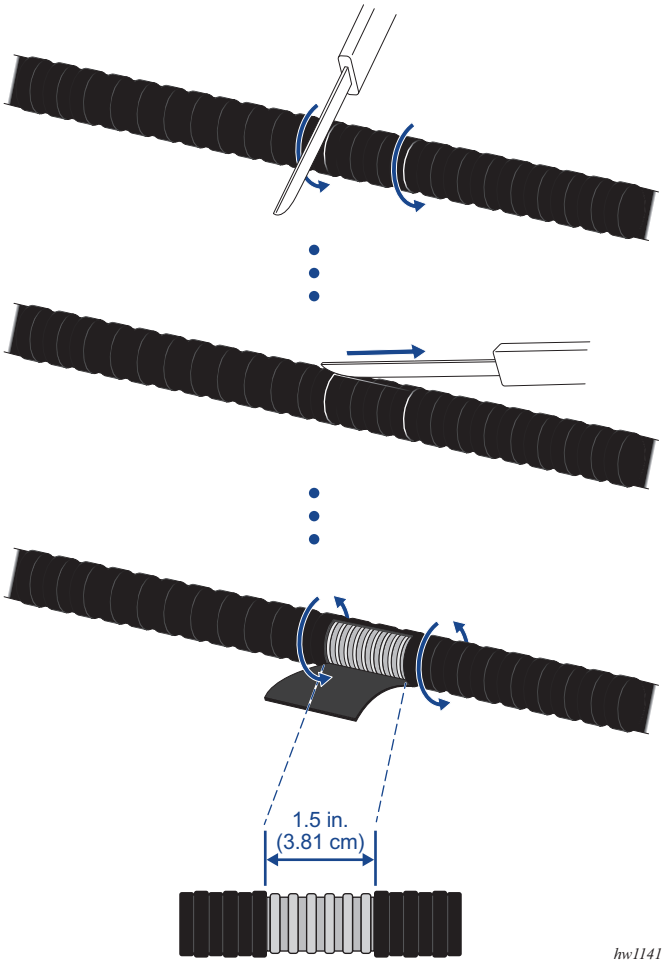

Step 2. Cut a 2 in. (2.54 cm) x 2.5 in. (5.1 cm) strip of PVC tape and apply it to the top of the grounding clamp cable. See Figure 82.

© 2022-2023 Nokia. Nokia Confidential Information
Use subject to agreed restrictions on disclosure and use.

Figure 82 **Applying the PVC Tape to the Grounding Clamp Cable**

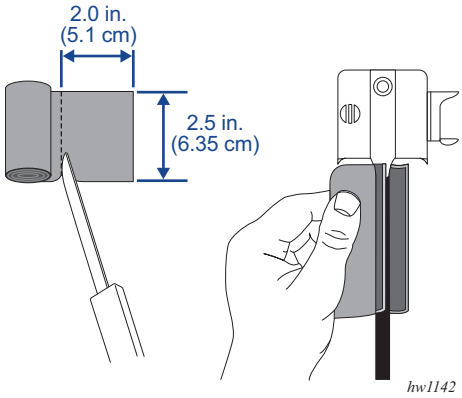

Step 3. Push the PVC tape upward so that it fits snugly against the top of the grounding clamp, as shown in Figure 83.

Figure 83 **Pushing the PVC Tape Upward on the Grounding Clamp Cable**

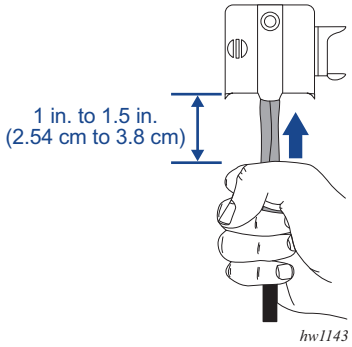

Step 4. Install the grounding clamp over the stripped portion of the cable. Rotate latch clip over the grounding plate to secure locking position. See Figure 84.

© 2022-2023 Nokia. Nokia Confidential Information
Use subject to agreed restrictions on disclosure and use.

Figure 84 **Installing the Grounding Clamp to the Cable**

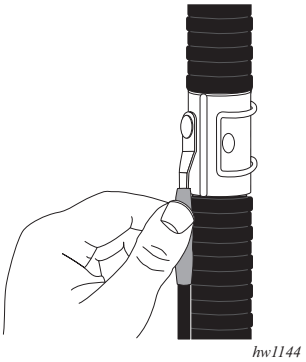

Step 5. Apply the butyl weatherproofing tape over the grounding clamp and cable as shown in Figure 85.

Figure 85 **Applying the Weatherproofing Tape Over the Grounding Clamp and Cable**

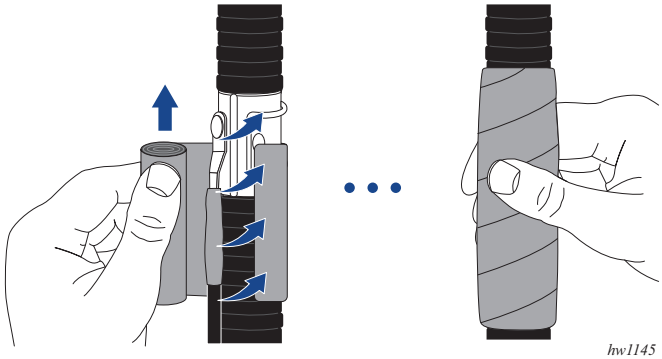

Step 6. Apply the PVC over the weatherproofing tape and cable as shown in Figure 86. When finished cut the end of the tape with a knife.

© 2022-2023 Nokia. Nokia Confidential Information
Use subject to agreed restrictions on disclosure and use.

Figure 86 **Applying the PVC Tape Over the Weatherproofing Tape and Cable**

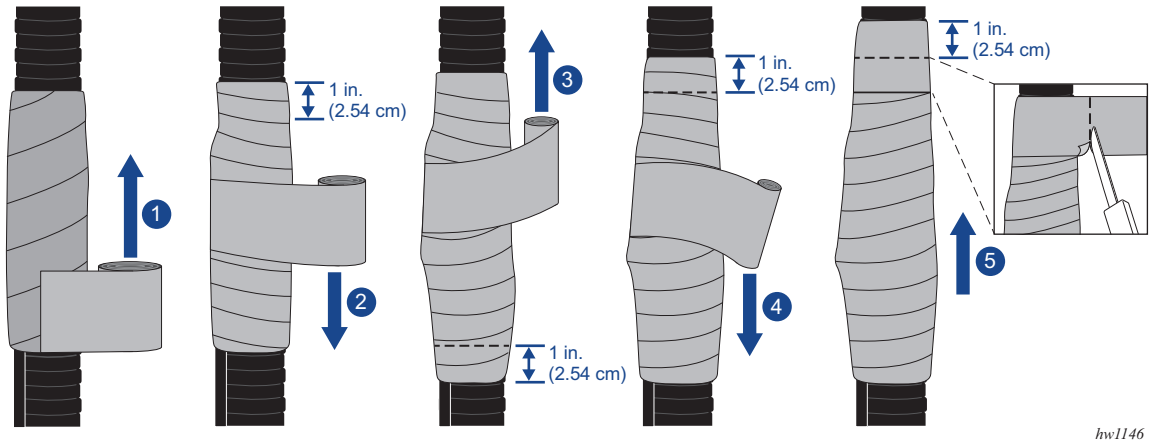

Figure 87 shows the LDF4 coaxial cable with the top portion of the ground wire lead completely waterproofed and sealed with tape. The two-hole lug can now be inserted at the end of the ground wire.

Figure 87 **LDF4 Coaxial Cable With the Top Portion of the Ground Lead Wire Waterproofed and Sealed With Tape**

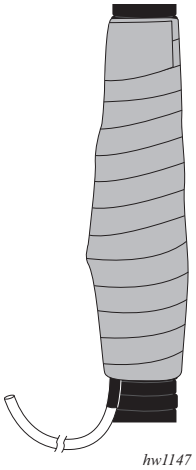

Step 7. If required, use a wire stripper to cut the bottom portion of the lead ground wire to a desired distance from the ground bus bar.

© 2022-2023 Nokia. Nokia Confidential Information
Use subject to agreed restrictions on disclosure and use.

Step 8. Insert the two-hole lug at the end of the wire and crimp it on. See Figure 88.

Figure 88 **Inserting the Two-Hole Lug at the End of the Lead Wire**

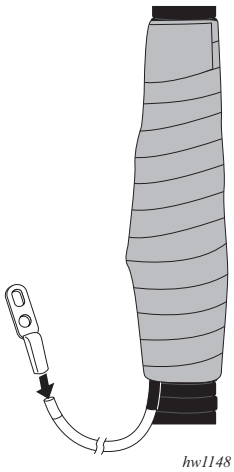

Step 9. Place the heat shrink tube over the area where the two-hole lug was crimped and heat-shrink the area to prevent water from getting in. See Figure 89.

Figure 89 **Placing the Heat Shrink Tube Over the Two-Hole Lug**

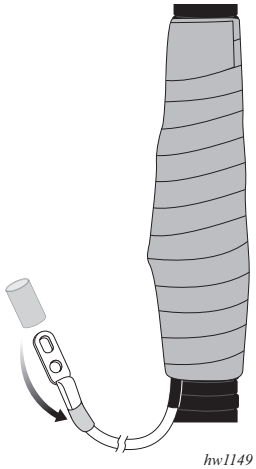

Step 10. Attach the two-hole lug to a ground bus bar; see Figure 66. Tighten the ground nuts with a ratchet.

© 2022-2023 Nokia. Nokia Confidential Information
Use subject to agreed restrictions on disclosure and use.

9.3 Connecting the Outdoor WiFi Antenna to the 7705 SAR-Hm WLAN Connector

The Outdoor WiFi omni-directional Antenna (3HE12346AA) is connected to the WLAN RP-SMA (female) connector on the 7705 SAR-Hm chassis.

The WiFi antenna has an N-Type (male) connector and can be mounted on a pole or mounted directly on the bulkhead connector of the enclosure.

The WLAN connector on the 7705 SAR-Hm requires a jumper cable with an RP-SMA to N-Type (female) connector, and the LDF4 coax cable must be used.

For bulkhead connections to the 7705 Outdoor Enclosure, see 7705 Outdoor Enclosure.

© 2022-2023 Nokia. Nokia Confidential Information
Use subject to agreed restrictions on disclosure and use.

9.4 RF Power Budget Calculations

This section describes RF losses for the LTE and WiFi accessories and power budget calculation for the installations.

Refer to the GNSS Installation Guide for information on GNSS antenna losses and RF budget calculations.

Table 46 lists the LTE losses for power budget commercial band calculations for indoor/outdoor installations.

Table 46 **LTE Losses for Power Budget Commercial Band Calculations for Indoor/Outdoor Installations**

Component	Loss
LDF4 cable	0.036 dB/ft
LTE surge protector	0.1 dB
3HE12318AA pigtail cable	1.1 dB
N-Type connector	0.1 dB

Table 47 lists the LTE losses for power budget commercial band calculations for outdoor installations.

Table 47 **LTE Losses for Power Budget Commercial Band Calculations for Outdoor Installations**

Component	Loss
LDF4 cable	0.036 dB/ft
LTE surge protector	0.1 dB
Outdoor enclosure internal cable loss	0.3 dB
N-Type connector	0.1 dB

Table 48 lists the WiFi losses for power budget commercial band calculations for indoor/outdoor installations.

© 2022-2023 Nokia. Nokia Confidential Information
Use subject to agreed restrictions on disclosure and use.

Table 48 **WiFi Losses for Power Budget Commercial Band Calculations for Indoor/Outdoor Installations**

Component	Loss
LDF4 cable	0.036 dB/ft @ 2.4GHz; 0.055 dB/ft @ 5GHz
WiFi surge protector	0.1 dB
3HE12318AA pigtail cable	1.1 dB @ 2.4GHZ; 1.5 dB @ 5GHz
N-Type connector	0.1 dB

Table 49 lists the WiFi losses for power budget commercial band calculations for outdoor installations.

Table 49 **WiFi Losses for Power Budget Commercial Band Calculations for Outdoor Installations**

Component	Loss
LDF4 cable	0.036 dB/ft @2.4GHz; 0.055 dB/ft @5GHz
WiFi surge protector	0.1 dB
Outdoor enclosure internal cable loss	1.0 dB @ 2.4GHz; 1.2 dB @ 5GHz
N-Type connector	0.1 dB

© 2022-2023 Nokia. Nokia Confidential Information
Use subject to agreed restrictions on disclosure and use.

© 2022-2023 Nokia. Nokia Confidential Information
Use subject to agreed restrictions on disclosure and use.

10 Making Connections to the RJ-45 Ports

10.1 In This Chapter

This chapter describes how to make connections to the RJ-45 ports on the 7705 SAR-Hm and 7705 SAR-Hmc. The topics include:

- Connecting Cables to RJ-45 Ports
- Cabling Considerations for 7705 Outdoor Enclosure Applications

© 2022-2023 Nokia. Nokia Confidential Information
Use subject to agreed restrictions on disclosure and use.

10.2 Connecting Cables to RJ-45 Ports

Warning:

- Ensure that you read and observe all of the Dangers and Warnings described in the Mandatory Regulations and Site Preparation chapters before connecting cables to the 7705 SAR-Hm and 7705 SAR-Hmc.
- Ensure that cables are dressed such that they do not impede the insertion or removal of other equipment.
- To maintain EMC compliance, cables that are shielded and grounded at both ends must be used with interface connectors.
- To meet surge protection requirements, the cable shield for any open-ended cables must be grounded by attaching the shield to a convenient chassis or power supply ground point, using hardware suitable to provide a solid electrical and mechanical connection. In addition, ensure that there is sufficient strain relief to remove any mechanical strain on the ground connection due to cable movement.

The 7705 SAR-Hm chassis supports two RS-232 ports, six 10/100Base-T Fast Ethernet (FE) ports, one Alarms port, and one Console port. The 7705 SAR-Hmc chassis supports two RS-232 ports in a single RJ-45 connector, three 10/100Base-T FE ports, one Alarms port, and one Console port. All ports have RJ-45 female connectors that require cables with RJ-45 male connectors. Figure 90 shows the location of the ports on the 7705 SAR-Hm. Figure 91 shows the location of the ports on the 7705 SAR-Hmc.

When making a connection to an FE port, a shielded CAT5 (minimum) Ethernet cable grounded at both ends must be used to maintain EMC compliance.

When making a connection to an RS-232 port, a shielded cable grounded at both sides must be used to maintain EMC compliance (an 8-conductor cable is required on the 7705 SAR-Hm and a 4-conductor cable is required on the 7705 SAR-Hmc). If a connection to both RS-232 ports on the RJ-45 connector is required on the 7705 SAR-Hmc, a 7705 SAR-Hmc RS-232 Y-Cable (3HE12554AA) is required.

When making a connection to the Console port, a shielded cable grounded at least at one end must be used.

When making a connection to the Alarms port, a shielded cable grounded at both ends must be used. For connections within the 7705 Outdoor Enclosure (a connection to the door alarm switch, for example) the shielded cable can be grounded at the 7705 SAR-Hmc Alarms port only.

© 2022-2023 Nokia. Nokia Confidential Information
Use subject to agreed restrictions on disclosure and use.

Figure 90 **RJ-45 Ports on the 7705 SAR-Hm**

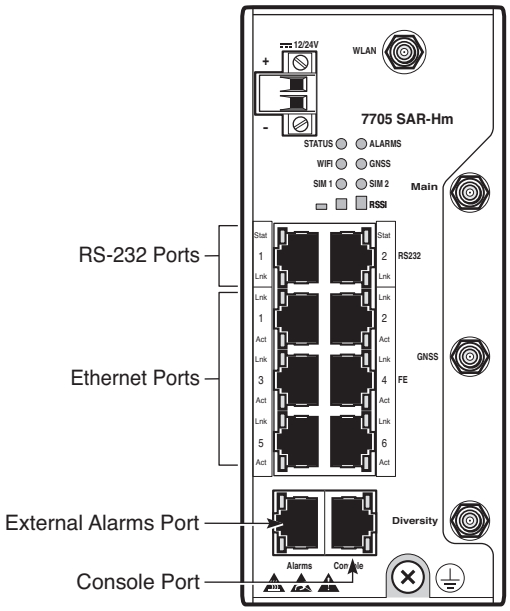

26453

Figure 91 **RJ-45 Ports on the 7705 SAR-Hmc**

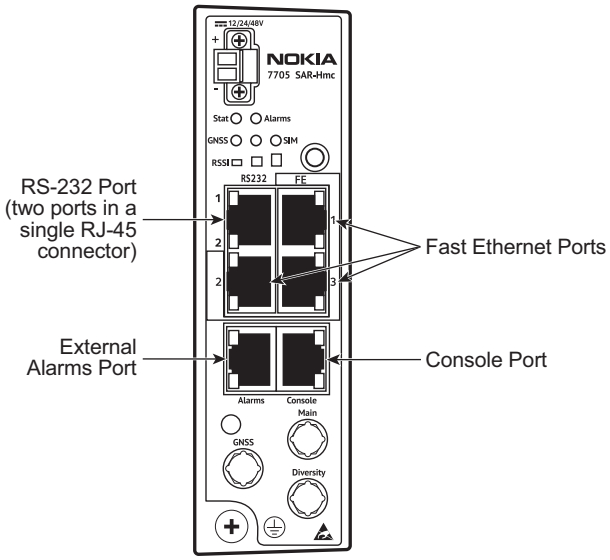

35686

© 2022-2023 Nokia. Nokia Confidential Information
Use subject to agreed restrictions on disclosure and use.

10.2.1 Making Shield Ground Connections

Required hardware:

- wire stripper
- hardware for making the connection (such as a screw, star washer, and cable ties)

To make a shield ground connection:

Step 1. Locate a convenient chassis ground point.

Step 2. Carefully strip enough insulation (outer jacket) from the cable such that the exposed grounding wire can reach the chassis ground point. Ensure that there is enough stripped insulation to provide strain relief for the ground connection.

Caution: When stripping the cable insulation, avoid nicking the ground conductors or the insulation on the signal conductor. Nicks can weaken or break a conductor or expose a wire to a potential short circuit.

Step 3. Separate the ground shield (braid, foil, and drain wire) from the signal conductors.

Step 4. Securely attach the shield to the chassis ground point. Use a screw and star washer large enough to make a proper ground connection. Use proper cable dressing and strain relief techniques.

10.2.2 Making Cable Connections

Warning:

- Ensure that you provide adequate strain relief (within a recommended distance of 1 to 2 ft (30.5 to 61.0 cm) of the connection point on the chassis) in order to prevent bending the cable when making the cable connection.
- For copper wire cables, maintain a minimum 1.2 in. (3.0 cm) bend radius within the allowable space.

Required hardware:

- cable ties (optional)

© 2022-2023 Nokia. Nokia Confidential Information
Use subject to agreed restrictions on disclosure and use.

To attach copper wire cables:

Step 1. Attach the cables to the port connectors on the chassis.

Step 2. Route the cables as described in Routing Cables.

Step 3. Attach the other end of the cables to the far-end equipment.

10.2.3 Making External Alarm Connections

The chassis is equipped with a copper RJ-45 female connector for external alarm connections, as shown in Figure 90.

All alarm input/output interfaces are 5V tolerant, and the outputs can sink or source up to 100 mA of current.

The external alarms interfaces are equipped with relays that can be used to trigger external alarm indicators. They also provide inputs that can be used to trigger the generation of alarms on the chassis to indicate environmental or external alarm conditions.

Required hardware:

- appropriate shielded cable with an RJ-45 male connector at the router end and a customized connector at the external devices end. Shielded cables must be used to maintain EMC compliance.

To make an external alarm connection:

Step 1. Design the external alarm circuitry using the input and output pin assignments provided in Alarms Port Pinout Assignments.

Step 2. Attach an appropriate connector at the external device end.

Step 3. Attach a shielded cable with an RJ-45 male connector to the router.

10.2.4 Routing Cables

Route the cables as required and in keeping with local practices, ensuring that all clearances are maintained around the chassis for unobstructed airflow. If desired, loosely bundle the cables together using a cable tie. Do not over-tighten the cable tie.

© 2022-2023 Nokia. Nokia Confidential Information
Use subject to agreed restrictions on disclosure and use.

10.3 Cabling Considerations for 7705 Outdoor Enclosure Applications

Warning:

- For a pole mount, the interconnecting communications wiring must not be strung from pole to pole unless equipped with suitable overcurrent and surge protection.
- If the Ethernet electrical connection between the chassis and another system is local (on the same structure), surge protectors are not required but the systems must be grounded to the same ground rod. If the other system is on a different ground structure, it is highly recommended that an outdoor Surge Protection Device (SPD) be installed on each of the chassis Ethernet ports.

  The Ethernet ports are suitable for connection to metallic Outside Plant (OSP) cable conductors located at cell sites and other similar locations with tall antennas.
- The RS-232, Alarms, and Console ports on the chassis are suitable for connection to intra-building or unexposed wiring or cabling only. The intrabuilding ports of the equipment must not be metallically connected to interfaces that connect to the OSP or its wiring. These interfaces are designed for use as intrabuilding interfaces only and require isolation from the exposed OSP cabling. The addition of primary protectors is not sufficient protection in order to connect these interfaces metallically to OSP wiring.

© 2022-2023 Nokia. Nokia Confidential Information
Use subject to agreed restrictions on disclosure and use.

11 Preparing the DC Power Connections

11.1 In This Chapter

This chapter provides information about wiring and connecting a DC power source directly to the 7705 SAR-Hm or 7705 SAR-Hmc. The topics include:

- Warnings and Notes
- Wiring and Connecting DC Power

Note: To connect a high-voltage DC power source to the 7705 SAR-Hm or 7705 SAR-Hmc, see High Voltage Power Supply Unit.

11.2 Warnings and Notes

Danger:

- Also observe the Dangers and Warnings in the Mandatory Regulations and Site Preparation chapters before performing this procedure.
- Confirm that the DC power source is OFF during installation. The power source should be a safety extra low voltage (SELV) source.
- Turn OFF power at the power source before you install or remove power cables or cords.
- You must use cables that meet local electrical code requirements.
- Explosion hazard—do not open, maintain, or service in an area where an explosive atmosphere may be present.

  Risque d'explosion—ne pas ouvrir, maintenir ou faire du service dans une zone ou une atmosphère explosive peut être présente.
- Explosion hazard—do not connect or disconnect when energized.

  Risque d'explosion—ne pas connecter ou débrancher lorsque énergé.
- Explosion hazard—do not remove or replace while circuit is live unless the area is free of ignitable concentrations.

  Risque d'explosion—ne pas enlever ou remplacer pendant que le circuit soit vivant, sauf si la zone est libre de concentrations ignitible.
- Connect or disconnect only in a non-hazardous area.

© 2022-2023 Nokia. Nokia Confidential Information
Use subject to agreed restrictions on disclosure and use.

Note:

- The 7705 SAR-Hm and 7705 SAR-Hmc require one DC power source to operate.
- The 7705 SAR-Hm and 7705 SAR-Hmc are suitable for use in either DC-I or DC-C installations. There are no connections between battery return and chassis ground within the 7705 SAR-Hm and 7705 SAR-Hmc.
- All bare conductors must be coated with an appropriate antioxidant compound before crimp connections are made. All unplated connectors, braided straps, and bus bars must be brought to a bright finish and then coated with an antioxidant before connecting them.

© 2022-2023 Nokia. Nokia Confidential Information
Use subject to agreed restrictions on disclosure and use.

11.3 Wiring and Connecting DC Power

The 7705 SAR-Hm chassis can operate at nominal voltages of +/–12/24 VDC and 7705 SAR-Hmc can operate at nominal voltages of +/–12/24/48 VDC. The chassis have a floating DC input and can operate at positive or negative polarity.

The following subsections describe how to prepare the DC wires, remove the power input terminal block from the chassis, if required, and wire the chassis for positive or negative DC power feeds.

11.3.1 Preparing the DC Input Wires

Note:

- Nokia does not supply power cables for the 7705 SAR-Hm or 7705 SAR-Hmc.
- The minimum AWG power conductor for the DC input connections must be based on the application, and on the local codes, practices, and regulations applicable for the region. The recommended maximum DC wire gauge for the 7705 SAR-Hm and 7705 SAR-Hmc is #18 AWG (0.75 sq mm, 1.0 mm diameter).

To connect power cables to the inputs, remove a portion of the outer jacket from each power cable at the router end as shown in Figure 92 and described in Table 50.

Figure 92 **DC Power Cable**

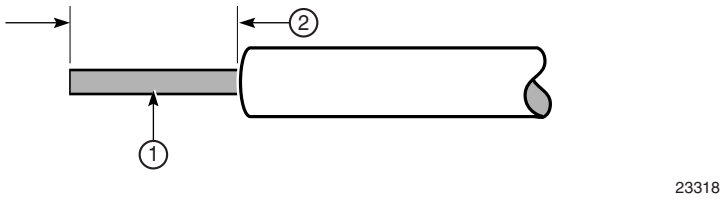

Table 50 **DC Power Cable Descriptions**

Key	Description
1	Copper wire
2	Insulation stripped according to local safety code

© 2022-2023 Nokia. Nokia Confidential Information
Use subject to agreed restrictions on disclosure and use.

Required tools and hardware:

- two lengths of wire
- wire cutter
- wire stripper
- insulated torque driver for slot screws; No. 2 slotted blade, width 0.138 in. (3.5 mm); blade thickness 0.024 in. (0.6 mm)

11.3.2 Removing and Reinstalling the DC Power Input Terminal Block

The 7705 SAR-Hm and 7705 SAR-Hmc have a single-feed, wire-to-board, pluggable terminal block on the front of the chassis. Because access to the binding screws on the terminal block may be limited when the chassis is installed in an enclosure, the terminal block can be removed, if required, to facilitate wiring. Figure 93 shows how to remove and replace the terminal block on the 7705 SAR-Hm and Figure 94 shows how to remove and replace the terminal block on the 7705 SAR-Hmc. Table 51 identifies the key items in the figures.

Figure 93 **Removing and Reinstalling the 7705 SAR-Hm DC Power Input Terminal Block**

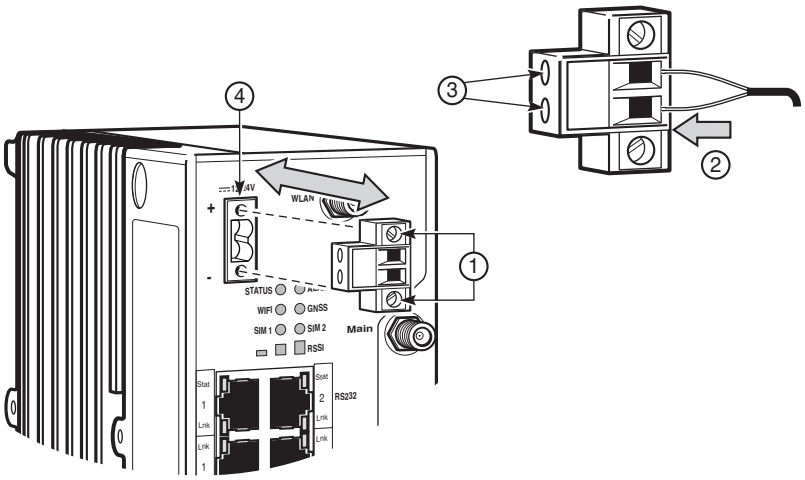

© 2022-2023 Nokia. Nokia Confidential Information
Use subject to agreed restrictions on disclosure and use.

Figure 94 **Removing and Reinstalling the 7705 SAR-Hmc DC Power Input Terminal Block**

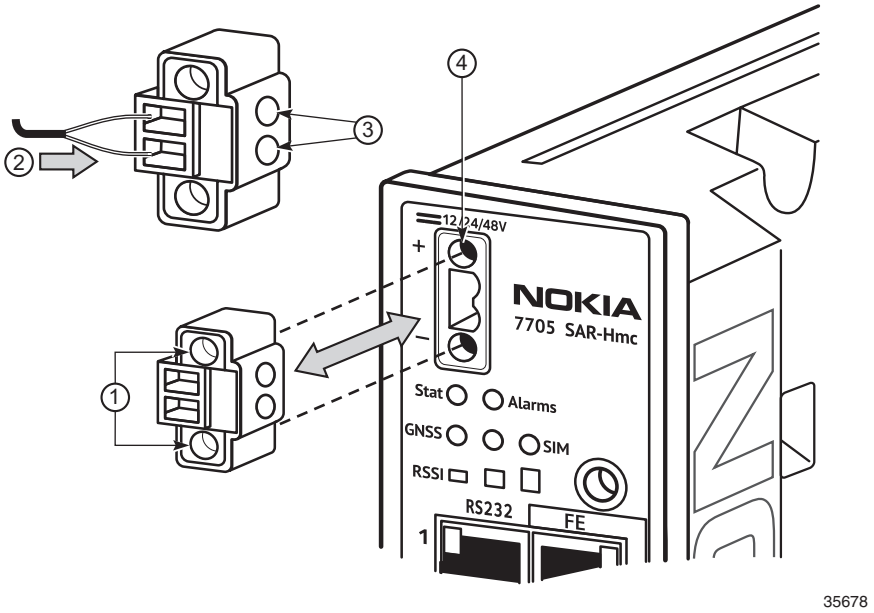

Table 51 **7705 SAR-Hm and 7705 SAR-Hmc DC Power Input Terminal Block Description**

Key	Description
1	Two M3 flat-head retaining screws on the 7705 SAR-Hm; two M2 flat-head retaining screws on the 7705 SAR-Hmc
2	Wire connector ports. The top port is positive (+) and the bottom port is negative (–).
3	Two captive binding screws used to secure the wire
4	Terminal block receptacle with key guide

Required tools:

- flat blade screwdriver for M3 retaining screws
- flat blade screwdriver for the captive binding screws

Caution: The terminal block is keyed to ensure that its connector is properly inserted into the receptacle. Do not force the terminal block into the receptacle.

© 2022-2023 Nokia. Nokia Confidential Information
Use subject to agreed restrictions on disclosure and use.

To remove and reinstall the DC power input terminal block:

Step 1. Use the flat blade screwdriver to remove the M3 retaining screws.

Step 2. Grasp the terminal block by the edges and pull it straight out.

Step 3. Connect the wires to the terminal ports. Perform one of the following procedures: Making –12/24 VDC and –12/24/48 VDC Connections or Making +12/24 VDC and +12/24/48 VDC Connections.

Step 4. Reinstall the terminal block in its receptacle. Orient the terminal block so that the wire connector ports are facing outwards and the binding screws are pointing to the left. Make sure that the terminal block connector is aligned with the key guide. Press the terminal block gently into the receptacle.

Step 5. Tighten the two M3 retaining screws using the flat blade screw driver. Do not over-tighten.

11.3.3 Making –12/24 VDC and –12/24/48 VDC Connections

Danger: Ensure that the disconnect device is in the OFF or open position.

Figure 95 shows the power inputs for the –12/24 VDC installations on a 7705 SAR-Hm and Figure 96 shows the power inputs for the –12/24/48 VDC installations on a 7705 SAR-Hmc. Table 52 identifies the key items in the figures.

© 2022-2023 Nokia. Nokia Confidential Information
Use subject to agreed restrictions on disclosure and use.

Figure 95 **Power Inputs for –12/24 VDC Installation on a 7705 SAR-Hm**

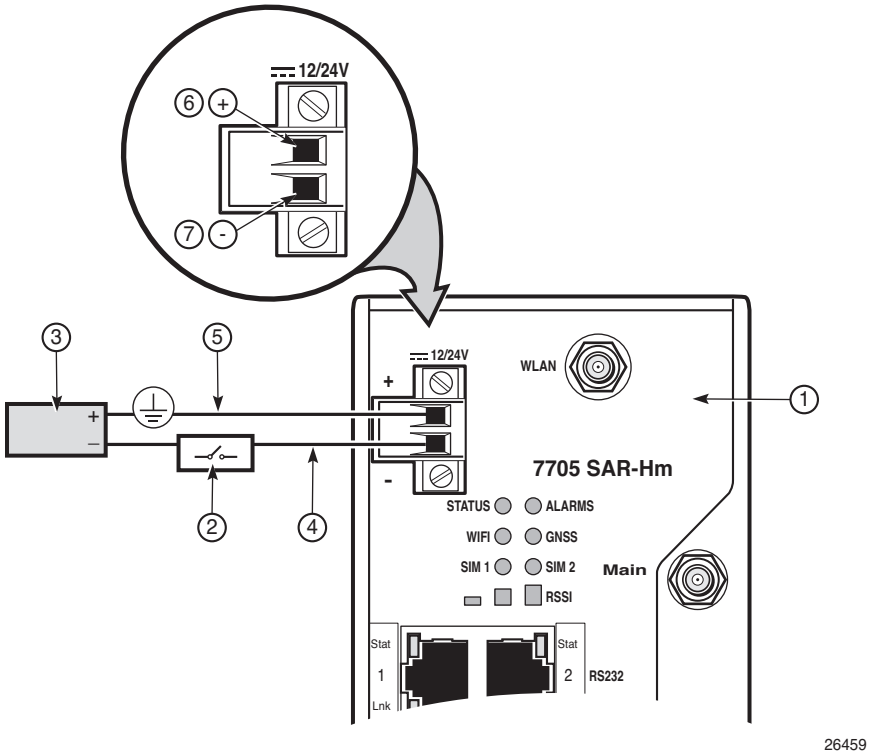

© 2022-2023 Nokia. Nokia Confidential Information
Use subject to agreed restrictions on disclosure and use.

Figure 96 **Power Inputs for –12/24/48 VDC Installation on a 7705 SAR-Hmc**

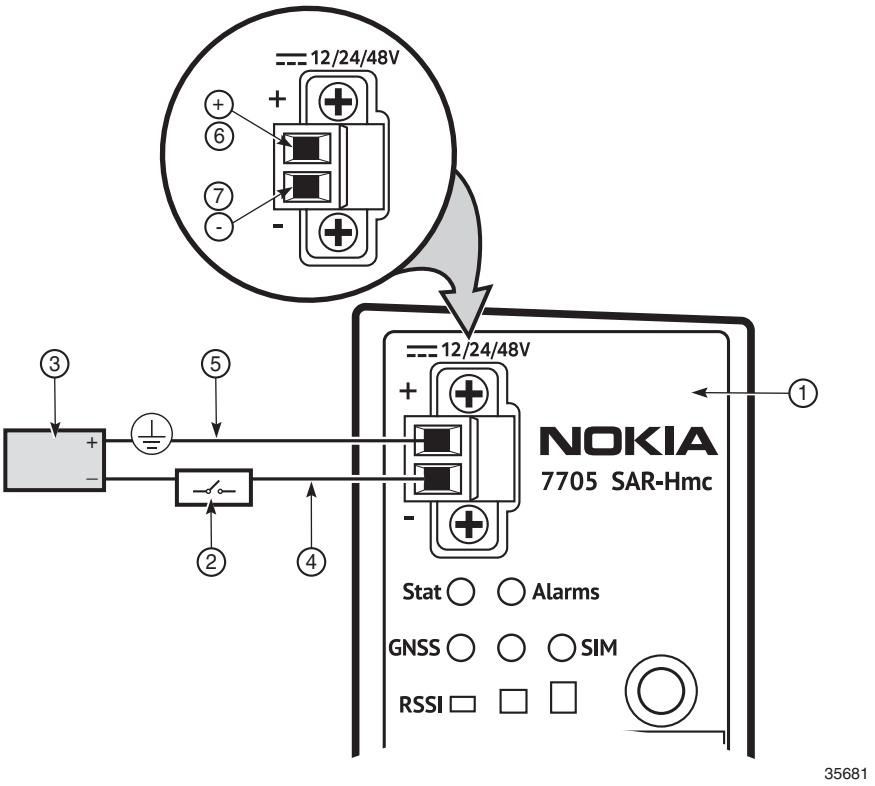

Table 52 **Wiring the DC Power Supplies Description**

Key	Description
1	7705 SAR-Hm or 7705 SAR-Hmc chassis
2	Disconnect device (circuit breaker or fuse, maximum 10 A for the 7705 SAR-Hm or 5 A for the 7705 SAR-Hmc)
3	DC source
4	Battery wire
5	Battery return wire
6	Positive input terminal
7	Negative input terminal

© 2022-2023 Nokia. Nokia Confidential Information
Use subject to agreed restrictions on disclosure and use.

To wire and connect –12/24 VDC power feeds on a 7705 SAR-Hm or to wire and connect –12/24/48 VDC power feeds on a 7705 SAR-Hmc:

Step 1. (Optional) Remove the power input terminal block, as described in Removing and Reinstalling the DC Power Input Terminal Block.

Step 2. Make the battery return connections on the 7705 SAR-Hm or 7705 SAR-Hmc (Figure 95 or Figure 96, key item 5):

i. Run a length of wire from the positive input on the router to the proper battery return termination point.

ii. Prepare the end of the wire at the power source according to local safety practices and attach it to the proper battery return termination point.

iii. Prepare the end of the wire at the router (see Figure 92) so that 0.28 in. (7 mm) of copper wire is exposed.

iv. Insert the battery return wire into the +Batt wire receptacle on the router. Tighten the screws to a maximum torque of 4.4 to 5.3 lbf-in (0.5 to 0.6 N·m).

Step 3. Make the battery connections to the disconnect device on the 7705 SAR-Hm or 7705 SAR-Hmc(Figure 95 or Figure 96, key item 2):

i. Run a length of wire from the disconnect device to router. Prepare the router end of the wire (see Figure 92). Prepare the wire at the disconnect device according to local safety practices.

ii. Insert the battery wire into the –Batt wire receptacle on the router. Tighten the screws to a maximum torque of 4.4 to 5.3 lbf-in (0.5 to 0.6 N·m).

iii. Attach the battery wire to the disconnect device.

Step 4. Check that the DC supply wiring is correct.

© 2022-2023 Nokia. Nokia Confidential Information
Use subject to agreed restrictions on disclosure and use.

11.3.4 Making +12/24 VDC and +12/24/48 VDC Connections

Danger: Ensure that the disconnect device is in the OFF or open position.

Figure 97 shows the power inputs for +12/24 VDC installations on a 7705 SAR-Hm and Figure 98 shows the power inputs for +12/24/48 VDC installations on a 7705 SAR-Hmc. Table 53 identifies the key items in the figure.

Figure 97 **Power Inputs for +12/24 VDC Installation on a 7705 SAR-Hm**

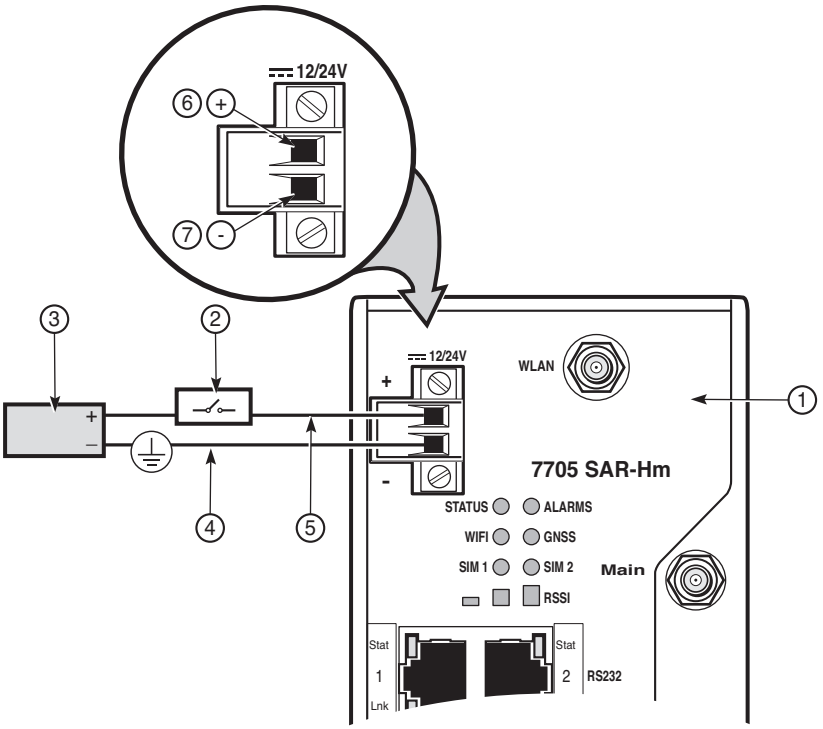

26458

© 2022-2023 Nokia. Nokia Confidential Information
Use subject to agreed restrictions on disclosure and use.

Figure 98 **Power Inputs for +12/24/48 VDC Installation on a 7705 SAR-Hmc**

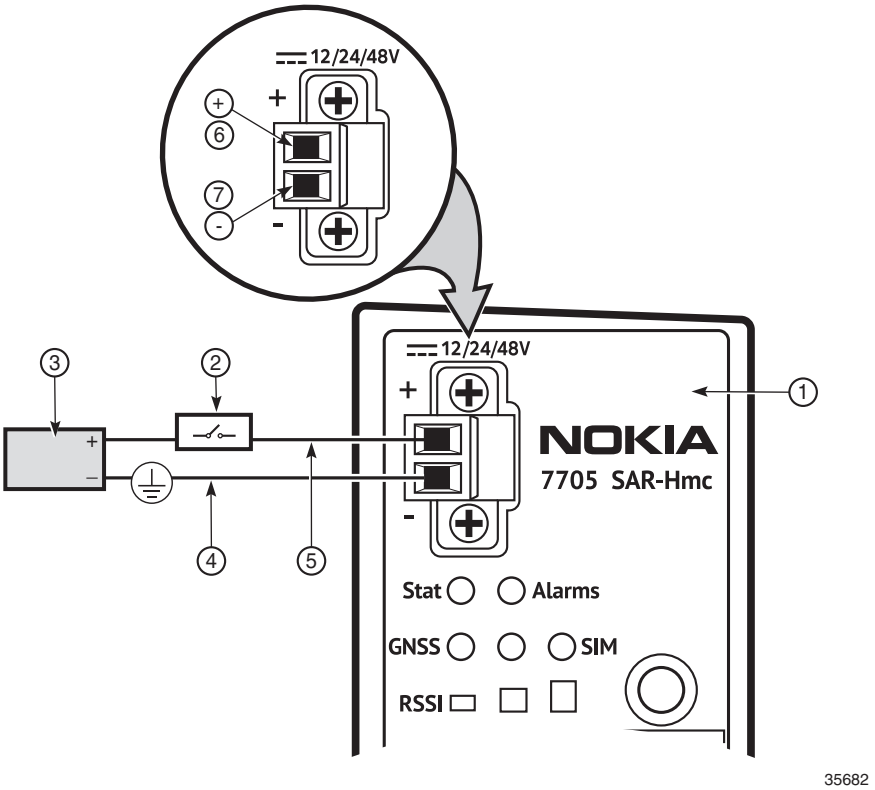

Table 53 **Wiring the DC Power Supplies Description**

Key	Description
1	7705 SAR-Hm or 7705 SAR-Hmc chassis
2	Disconnect device (circuit breaker or fuse, maximum 10 A for the 7705 SAR-Hm or 5 A for the 7705 SAR-Hmc)
3	DC source
4	Battery wire
5	Battery return wire
6	Positive input terminal
7	Negative input terminal

© 2022-2023 Nokia. Nokia Confidential Information
Use subject to agreed restrictions on disclosure and use.

To wire and connect +12/24 VDC power feeds on a 7705 SAR-Hm or to wire and connect +12/24/48 VDC power feeds on a 7705 SAR-Hmc:

Step 1. Make the battery return connections on the 7705 SAR-Hm or 7705 SAR-Hmc (Figure 97 or Figure 98, key item 4):

i. Run a length of wire from the negative input on the router or to the proper battery return termination point.

ii. Prepare the end of the wire at the power source according to local safety practices and attach it to the proper battery return termination point.

iii. Prepare the end of the wire at the router (see Figure 92) so that 0.28 in. (7 mm) of copper wire is exposed.

iv. Insert the battery return wire into the –Batt wire receptacle on the router. Tighten the screws to a maximum torque of 4.4 to 5.3 lbf-in (0.5 to 0.6 N·m).

Step 2. Make the battery connections on the 7705 SAR-Hm or 7705 SAR-Hmc to the disconnect device (Figure 97 or Figure 98, key item 2):

i. Run a length of wire from the disconnect device to the router. Prepare the chassis end of the wire (see Figure 92). Prepare the wire at the disconnect device according to local safety practices.

ii. Insert the battery wire into the +Batt wire receptacle on the router. Tighten the screws to a maximum torque of 4.4 to 5.3 lbf-in (0.5 to 0.6 N·m).

iii. Attach the battery wire to the disconnect device.

Step 3. Check that the DC supply wiring is correct.

© 2022-2023 Nokia. Nokia Confidential Information
Use subject to agreed restrictions on disclosure and use.

12 High Voltage Power Supply Unit

12.1 In This Chapter

This chapter describes how to install and ground the optional 35W High Voltage Power Supply Unit (HV-PS35), how to connect the AC or DC power feeds to the HV-PS35, and how to connect the HV-PS35 to the 7705 SAR-Hm and 7705 SAR-Hmc. The topics include:

- Warnings and Notes
- Overview
- Unpacking the HV-PS35
- DIN Rail-mounting the HV-PS35
- Mounting the HV-PS35 on a Flat Surface
- 7705 Outdoor Enclosure Installation
- HV-PS35 Ground Wiring
- HV-PS35 Power Supply Connections
- Connecting the HV-PS35 to the 7705 SAR-Hm or 7705 SAR-Hmc
- Connecting the HV-PS35 to a Power Source

Note: Technical specifications for the HV-PS35 are described in the HV-PS35 Specifications section of the Site Preparation chapter.

© 2022-2023 Nokia. Nokia Confidential Information
Use subject to agreed restrictions on disclosure and use.

12.2 Warnings and Notes

Danger:

- Also observe the Dangers and Warnings in the Mandatory Regulations and Site Preparation chapters before performing this procedure.
- When wiring the HV-PS35, the power supply ground connection must always be made first and disconnected last.
- For high-voltage DC applications, the circuit breaker or fuse must be approved for the applicable DC voltage. A suitable disconnect device must be provided in the DC branch, either a circuit breaker, fuse, or switch that can be used to disconnect power to the system during servicing.
- For high-voltage AC applications, AC power can be disconnected by unplugging the far end of the power cord from the AC power source receptacle.
- You must use cables that meet local electrical code requirements.

Warning:

- The HV-PS35 must not be installed in hazardous locations.
- The HV-PS35 must not be installed in the same compartment as the batteries, which can give off gas. Out-gassing from batteries could not only have corrosive effects, but could also result in an explosion. If batteries are located in the same cabinet, the battery compartment must be completely sealed off from all other equipment and must be properly ventilated for safety as required by product safety standards and local codes and statutes.
- The router and equipment rack must be properly grounded. Electrostatic discharge (ESD) damage can occur if components are mishandled.
- Always wear an ESD-preventive wrist or ankle strap and always connect an ESD strap to a nearby ground point that is connected to the site grounding point when working on the 7705 SAR-Hm, 7705 SAR-Hmc, or the HV-PS35.

© 2022-2023 Nokia. Nokia Confidential Information
Use subject to agreed restrictions on disclosure and use.

12.3 Overview

The optional and separately orderable Nokia HV-PS35 (3HE11298AA) can be deployed in facilities where a high-voltage AC or DC power source is available. The HV-PS35 is an intermediary power supply that converts a high-voltage (88 to 300 VDC or 90 to 264 VAC at 50/60 Hz) power feed to a low-voltage output suitable for the 7705 SAR-Hm or 7705 SAR-Hmc.

The HV-PS35 (see Figure 99) has two 2-conductor, wire-to-terminal, removable terminal blocks. Each terminal block is attached to the front of the power supply with two retaining screws. The 7705 SAR-Hm and 7705 SAR-Hmc have a single, 2-conductor, wire-to-board terminal block attached to the front of the chassis. The terminals are the DC power feed points for DC voltage from the HV-PS35.

Note:

- The HV-PS35 can be installed on a DIN rail, on a flat surface, or in the 7705 Outdoor Enclosure.
- AC and DC power cords are not included with the HV-PS35.
- The minimum size of the power conductor for the AC or DC input connections must be based on the application and on the local codes, practices, and regulations applicable for the region.

Figure 99 **HV-PS35 Features**

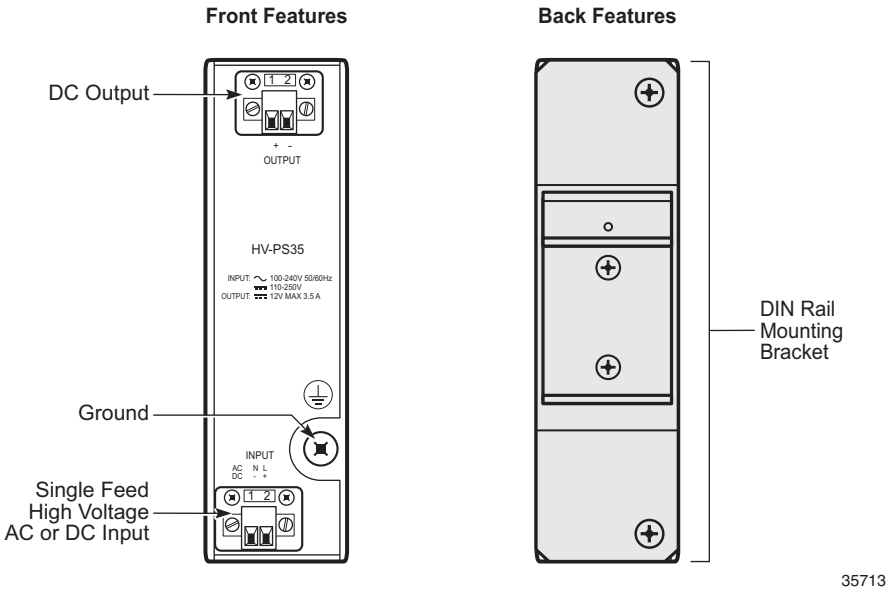

© 2022-2023 Nokia. Nokia Confidential Information
Use subject to agreed restrictions on disclosure and use.

12.4 Unpacking the HV-PS35

Each HV-PS35 is shipped in a corrugated cardboard container and is encased in a foam tray. The shipping weight of the HV-PS35 is approximately 2.9 lb (1.3 kg).

Warning: Wear a properly grounded anti-static wrist strap when unpacking the HV-PS35 to prevent damage to the equipment due to ESD.

Note: It may be desirable to save a small quantity of undamaged original packaging containers and materials for reuse. For example, the packaging container could be reused for shipment of a unit to a Repair Center or for future relocation.

To unpack the HV-PS35, open the carton and follow these steps:

Step 1. Carefully lift the unit out of the carton and place it on a flat anti-static surface.

Step 2. Remove the foam packaging.

Step 3. Keep the protective anti-static wrapping around the power supply until you are ready to install the unit.

© 2022-2023 Nokia. Nokia Confidential Information
Use subject to agreed restrictions on disclosure and use.

12.5 DIN Rail-mounting the HV-PS35

The HV-PS35 is designed for installation on a 35 mm × 15 mm or 35 mm × 7.5 mm top-hat DIN rail that conforms to the EN 50022 standard. The power supply is shipped with a factory-installed DIN rail mounting bracket attached to the rear of the unit. The power supply can be mounted beside a 7705 SAR-Hm or 7705 SAR-Hmc on a horizontal DIN rail. The power supply can only be mounted vertically on the DIN rail; it cannot be mounted on a vertical DIN rail.

To install the HV-PS35 on a DIN rail:

Step 1. Center the HV-PS35 against the DIN rail.

Step 2. Hook the DIN rail clip on the DIN rail mounting bracket over the top of the rail and apply downward pressure on the unit until the bottom lip latches onto the rail.

© 2022-2023 Nokia. Nokia Confidential Information
Use subject to agreed restrictions on disclosure and use.

12.6 Mounting the HV-PS35 on a Flat Surface

If the 7705 SAR-Hm or 7705 SAR-Hmc is installed on a flat surface, the HV-PS35 can be used to power the chassis.

© 2022-2023 Nokia. Nokia Confidential Information
Use subject to agreed restrictions on disclosure and use.

12.7 7705 Outdoor Enclosure Installation

The HV-PS35 can be attached to the 7705 SAR-Hm or 7705 SAR-Hmc chassis if the chassis is used in a 7705 Outdoor Enclosure.

Note: The HV-PS35 mounting hardware is included with the 7705 Outdoor Enclosure.

Required tools:

- #2 Phillips screwdriver
- M5 Hex socket driver

To attach the HV-PS35 to a 7705 SAR-Hm or 7705 SAR-Hmc chassis:

Step 1. Remove the DIN mounting bracket (shown in Figure 99) from the rear of the HV-PS35. Save the screws for reuse.

Step 2. Attach the HV-PS35 mounting bracket to the chassis.

First, align and install an M5 x 10 mm screw towards the front face of the chassis, and then install an M5 x 10 mm screw at the back of the chassis.

Torque both screws to 10 in-lb (1.1 N·m). Do not over-tighten. See Figure 100.

© 2022-2023 Nokia. Nokia Confidential Information
Use subject to agreed restrictions on disclosure and use.

Figure 100 **Attaching the HV-PS35 Mounting Bracket to the Chassis**

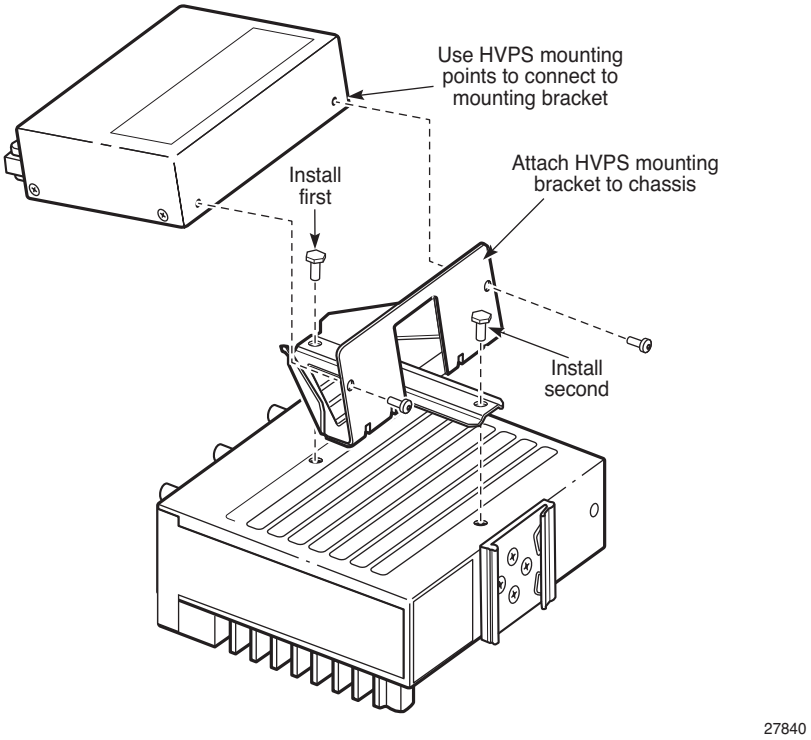

Step 3. Attach the HV-PS35 unit to the mounting bracket using the screws that were removed from the DIN rail mount. Figure 101 shows the HV-PS35 attached to the mounting bracket on a 7705 SAR-Hm. Figure 102 shows the HV-PS35 attached to the mounting bracket on a 7705 SAR-Hmc.

Figure 101 **HV-PS35 Attached to the Mounting Bracket on a 7705 SAR-Hm**

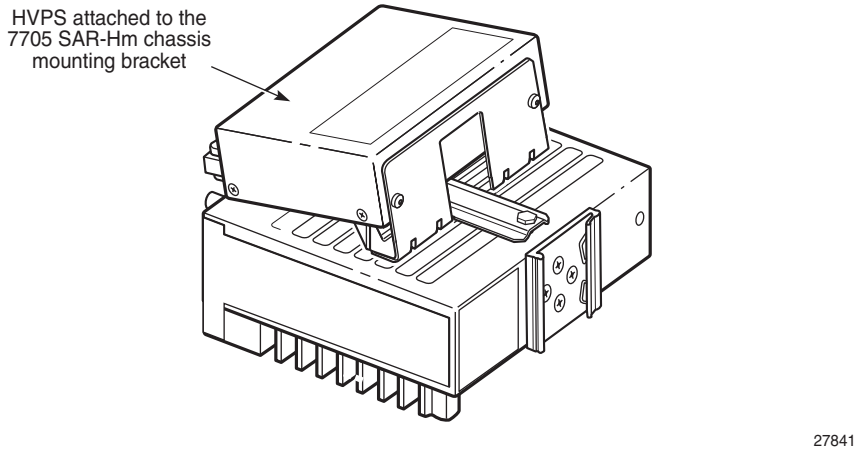

© 2022-2023 Nokia. Nokia Confidential Information
Use subject to agreed restrictions on disclosure and use.

Figure 102 **The HV-PS35 Attached to the Mounting Bracket on the 7705 SAR-Hmc**

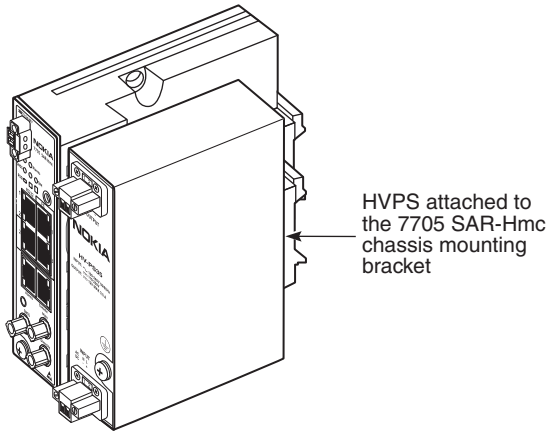

© 2022-2023 Nokia. Nokia Confidential Information
Use subject to agreed restrictions on disclosure and use.

12.8 HV-PS35 Ground Wiring

To ensure that the equipment is connected to earth ground, use the following instructions to prepare the ground wire and make the connection. The ground wire is not provided. The length of the ground wire depends on the location of the HV-PS35 and proximity to the proper grounding facilities.

Danger: Do not connect the input power to the HV-PS35 before making the ground connection.

Warning: The ground wire must be #12 AWG (3.3 sq mm; 2.0 mm diameter) or greater.

Note:

- The HV-PS35 is equipped with an M4 screw with an internal tooth star washer located on the faceplate. The screw and washer allow a ground wire to be attached to the HV-PS35 via a closed loop crimp connector. The power supply ground must be a permanent connection to the earth (building) ground point, using either a direct connection or a ground bus.
- When wiring the unit, the HV-PS35 ground connection must always be made first and disconnected last.
- The M4 screw used to secure the HV-PS35 ground wire must only be used for that purpose.
- All bare conductors must be coated with an appropriate antioxidant compound before crimp connections are made. All unplated connectors, braided strap, and bus bars must be brought to a bright finish and then coated with an antioxidant before connecting them.
- All surfaces that are used for intentionally grounding the HV-PS35 must be brought to a bright finish, and an antioxidant solution must be applied to the surfaces being joined.
- The 7705 SAR-Hm and 7705 SAR-Hmc support both CBN and IBN. For systems using an AC power source, only CBN is supported.

© 2022-2023 Nokia. Nokia Confidential Information
Use subject to agreed restrictions on disclosure and use.

12.8.1 Making the Ground Connection

Required tools and hardware:

- wire stripper
- wire cutter
- crimping tool
- #2 Phillips torque driver
- M4 screw with internal tooth star washer (provided with the HV-PS35)
- external tooth star washer (not provided with the HV-PS35)
- ring lug
- minimum #12 AWG (3.3 sq mm; 2.0 mm diameter) wire, green and yellow insulation

Figure 103 shows how to prepare the ground wire for the HV-PS35. Table 54 identifies the key items in the figure.

Figure 103 **Preparing the Ground Wire**

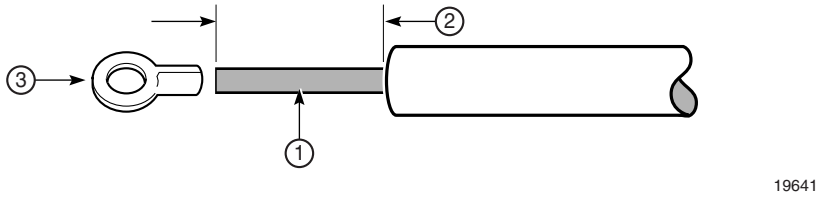

Table 54 **Ground Wire Descriptions**

Key	Description
1	Copper ground wire with a green and yellow insulation, minimum #12 AWG (3.3 sq mm; 2.0 mm diameter)
2	Insulation stripped according to local safety code
3	Ring lug

Figure 104 shows the ground connector on the HV-PS35. Table 55 identifies the key items in the figure.

© 2022-2023 Nokia. Nokia Confidential Information
Use subject to agreed restrictions on disclosure and use.

Figure 104 **Attaching a Ground Connector to the HV-PS35**

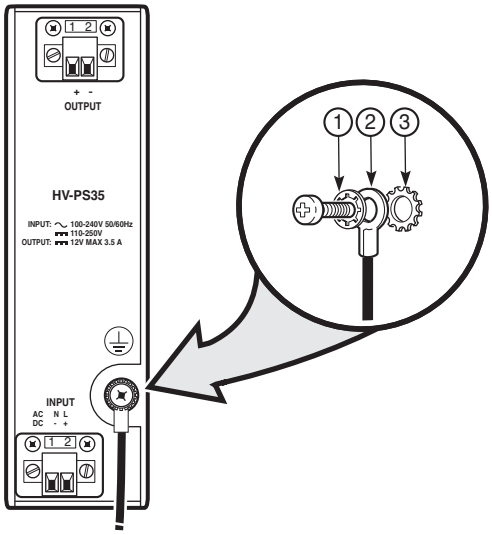

26472

Table 55 **Ground Connection Components**

Key	Description
1	M4 screw with internal tooth star washer (provided with the HV-PS35)
2	Ring lug and chassis ground wire (green and yellow)
3	External tooth star washer (provided with the HV-PS35)

To make the HV-PS35 ground connection:

Step 1. Run a single length of #12 AWG (3.3 sq mm; 2.00 m diameter) (minimum) wire from the ground point (building ground or equipment ground bus) to the HV-PS35 ground point.

Step 2. Using a wire-stripping tool, strip the insulation from the wire according to local safety codes and crimp the ring lug to the wire (Figure 103).

Note: To ensure a reliable connection, use the crimp tool recommended by the crimp manufacturer.

Step 3. Remove the M4 screw from the ground position on the HV-PS35 faceplate.

© 2022-2023 Nokia. Nokia Confidential Information
Use subject to agreed restrictions on disclosure and use.

Step 4. Use the M4 screw to secure the ring lug to the ground position, as shown in Figure 104. Tighten to a torque of 11 lbf-in (1.24 N·m) minimum, 16.0 lbf-in (1.8 N·m) maximum. Do not over-tighten.

Step 5. Connect the opposite end of the ground wire to the appropriate ground point at your installation site. Ensure that the ground connection is made according to local safety codes.

Step 6. Use cable ties to ensure that the ground cable is secured to structural members and that enough wire is left so that the ground connection is not under strain.

© 2022-2023 Nokia. Nokia Confidential Information
Use subject to agreed restrictions on disclosure and use.

12.9 HV-PS35 Power Supply Connections

Note:

- Nokia does not supply power cables for the 7705 SAR-Hm, 7705 SAR-Hmc, or the HV-PS35.
- The HV-PS35 can be connected to an HV DC or HV AC power source. For minimum AWG power conductor requirements and installation steps, see Connecting the HV-PS35 to a DC Power Source (for HV DC) or Connecting the HV-PS35 to an AC Power Source (for HV AC).
- The HV-PS35 is a Class 2 power supply that requires only 2-conductor wires to operate. Three-conductor wires can also be used.

Figure 105 shows the HV-PS35 power supply connections on a 7705 SAR-Hm and Figure 106 shows the HV-PS35 power supply connections on a 7705 SAR-Hmc. Table 56 identifies the key items in the figures.

Figure 105 **Wiring the HV-PS35 to the 7705 SAR-Hm**

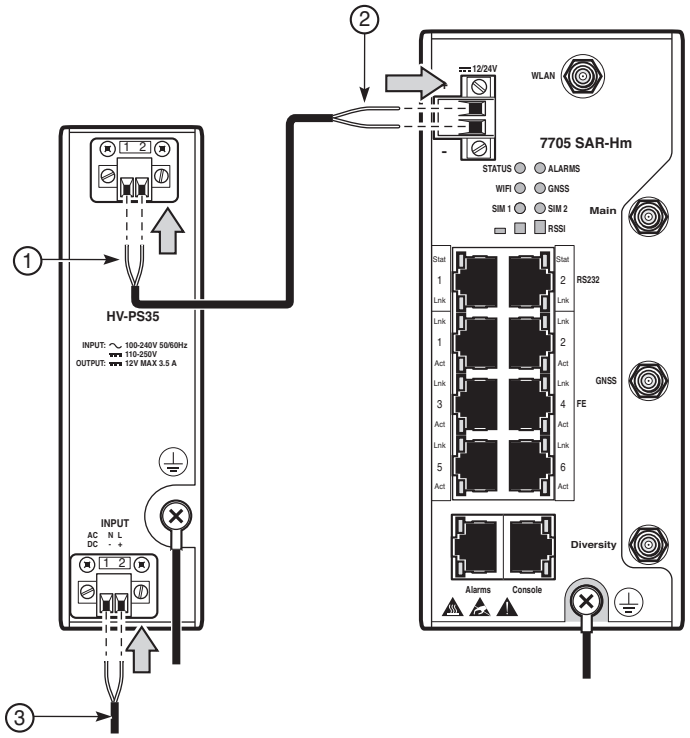

© 2022-2023 Nokia. Nokia Confidential Information
Use subject to agreed restrictions on disclosure and use.

Figure 106 **Wiring the HV-PS35 to the 7705 SAR-Hmc**

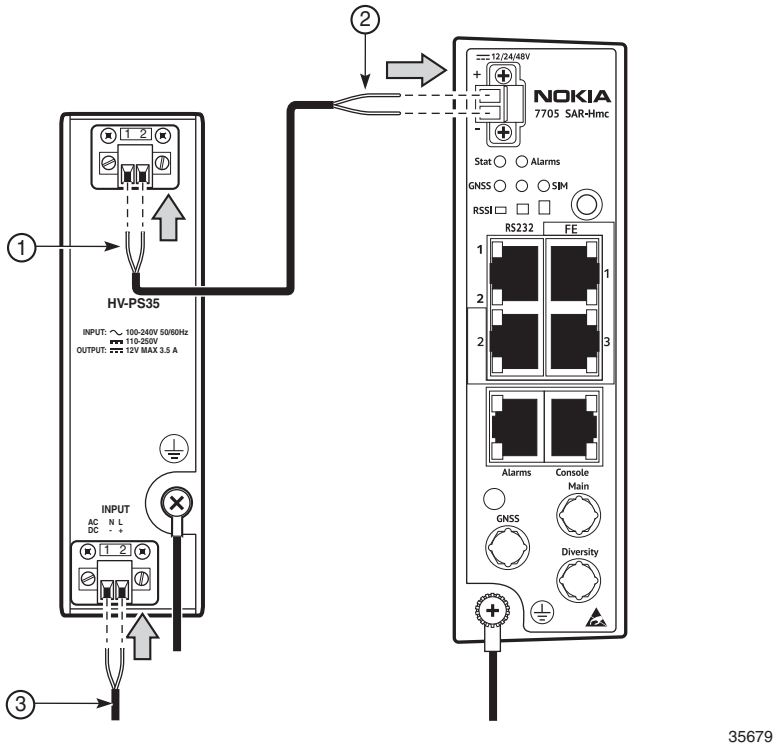

Table 56 **Wiring the HV-PS35 to the 7705 SAR-Hm or 7705 SAR-Hmc**

Key	Description
1	0.28 in. (7 mm) of outer shielding removed from each wire to expose the conductor. This wire is connected to the HV-PS35 DC output terminal block.
2	0.28 in. (7 mm) of outer shielding removed from each wire to expose the conductor. This wire is connected to the 7705 SAR-Hm or 7705 SAR-Hmc DC input terminal block.
3	0.28 in. (7 mm) of outer shielding removed from each wire to expose the conductor. This wire is connected to the HV-PS35 single-feed input terminal block for a high-voltage AC or DC feed.

© 2022-2023 Nokia. Nokia Confidential Information
Use subject to agreed restrictions on disclosure and use.

12.9.1 Removing and Reinstalling HV-PS35 Power Terminal Blocks

The HV-PS35 has two single-feed, wire-to-board, pluggable terminal blocks on the front of the power supply: a DC power output at the top of the power supply and a high-voltage AC or DC input at the bottom of the power supply, as shown in Figure 99. Both terminal blocks have the same mechanical features.

Because access to the binding screws on the terminal blocks may be limited when the 7705 SAR-Hm or 7705 SAR-Hmc chassis and HV-PS35 are installed in an enclosure, the terminal blocks can be removed, if required, to facilitate wiring. Figure 107 shows how to remove and replace the terminal blocks.

Figure 107 **Removing and Reinstalling the HV-PS35 Power Terminal Blocks**

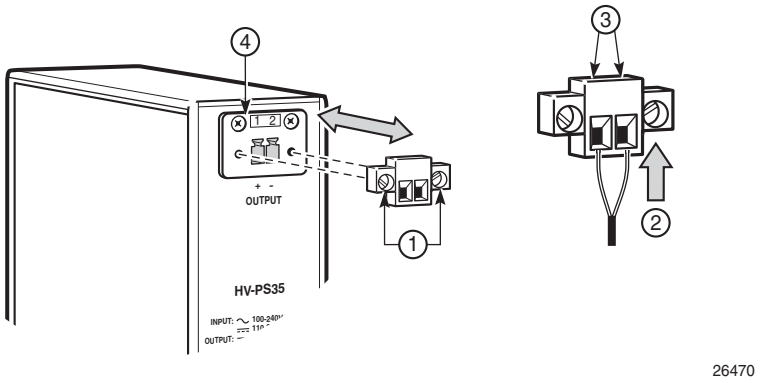

Table 57 **HV-PS35 Power Terminal Block**

Key	Description
1	Two M3 flat-head retaining screws
2	Wire connector ports. The left port is negative (–) and the right port is positive (+)
3	Two M2 binding screws used to secure the wire
4	Terminal block receptacle with key guide

© 2022-2023 Nokia. Nokia Confidential Information
Use subject to agreed restrictions on disclosure and use.

Required tools:

- flat blade screwdriver for M3 retaining screws

Caution:

- The terminal blocks are keyed to ensure that the connectors are properly inserted into the receptacles. Do not force a terminal block into a receptacle.
- The terminal blocks for the 7705 SAR-Hm or 7705 SAR-Hmc and for the HV-PS35 are not interchangeable.

The same steps are applicable to both terminal blocks. To remove and reinstall the input and output terminal blocks on the HV-PS35:

Step 1. Use the flat blade screwdriver to remove the M3 retaining screws.

Step 2. Grasp the terminal block by the edges and pull it straight out.

Step 3. Connect the wires to the terminal ports. See Connecting the HV-PS35 to the 7705 SAR-Hm or 7705 SAR-Hmc and Connecting the HV-PS35 to a Power Source for information.

Step 4. Reinstall the terminal block in the receptacle. Orient the connector so that the wire connector ports are facing outwards and the binding screws are pointing up. Make sure that the terminal block connector is aligned with the key guide. Press the terminal block gently into the receptacle.

Step 5. Tighten the two M3 retaining screws using the flat blade screw driver. Do not over-tighten.

© 2022-2023 Nokia. Nokia Confidential Information
Use subject to agreed restrictions on disclosure and use.

12.10 Connecting the HV-PS35 to the 7705 SAR-Hm or 7705 SAR-Hmc

Note:

- The minimum AWG power conductor for the DC input connection from the HV-PS35 to the 7705 SAR-Hm or 7705 SAR-Hmc must be based on the application, and on the local codes, practices, and regulations applicable for the region.
- The recommended minimum wire gauge is #22 AWG; the maximum DC wire gauge is #16 AWG.

This section describes how to connect the HV-PS35 to the 7705 SAR-Hm or 7705 SAR-Hmc.

Required tools and hardware:

- wire stripper
- torque driver for M2 binding screws on the HV-PS35 or 7705 SAR-Hmc; flat blade, SZS 0.6 X 3.5 mm
- torque driver for M3 binding screws on the 7705 SAR-Hm terminal block; flat blade, SZS 0.4 X 2.5 mm
- 2-conductor wire: #16 AWG (maximum)

To connect the HV-PS35 to the VDC power feed inputs on the 7705 SAR-Hm or 7705 SAR-Hmc terminal block:

At the HV-PS35

Step 1. Prepare the end of the wire at the HV-PS35 output terminal block so that 0.28 in. (7 mm) of copper wire is exposed (see Figure 105 or Figure 106, key item 1).

Step 2. Insert the positive wire into the positive (+) receptacle on the right and the negative wire into the negative (–) receptacle on the left of the output terminal block. Tighten the screws to a maximum torque of 1.95 to 2.2 lbf-in (0.22 to 0.25 N·m).

At the 7705 SAR-Hm or 7705 SAR-Hmc

Step 3. Prepare the end of the wire at the 7705 SAR-Hm or 7705 SAR-Hmc input terminal block so that 0.28 in. (7 mm) of copper wire is exposed (see Figure 105 or Figure 106, key item 2).

© 2022-2023 Nokia. Nokia Confidential Information
Use subject to agreed restrictions on disclosure and use.

Step 4. Insert the positive wire into the positive (+) receptacle of the input terminal block. Insert the negative wire into the negative (–) receptacle of the input terminal block. Tighten the screws to a torque of 4.4 to 5.3 lbf-in (0.5 to 0.6 N·m) maximum.

© 2022-2023 Nokia. Nokia Confidential Information
Use subject to agreed restrictions on disclosure and use.

12.11 Connecting the HV-PS35 to a Power Source

Warning: Perform the steps described in Connecting the HV-PS35 to the 7705 SAR-Hm or 7705 SAR-Hmc before connecting the HV-PS35 to a power source to avoid inadvertent connection of AC or HV DC power to the HV-PS35 output terminal block.

This section describes how to connect the HV-PS35 to an HV DC or AC power source. Power feeds from 90 VAC to 264 VAC (50/60 Hz) or from 127 VDC to 300 VDC are supported.

12.11.1 Connecting the HV-PS35 to a DC Power Source

Danger:

- For high-voltage DC applications, the circuit breaker or fuse must be approved for the applicable DC voltage. A suitable disconnect device must be provided in the DC branch, either a circuit breaker, or fuse and switch that can be used to disconnect power to the system during servicing.
- For the HV-PS35, the means of disconnect is the disconnect device on the DC branch.
- Do not apply power from the DC power source until instructed to do so.

Note:

- The minimum size/AWG power conductor for the DC input connection from the DC power source to the HV-PS35 must be based on the application, and on the local codes, practices, and regulations applicable for the region.

This section describes how to connect the HV-PS35 to a DC power source.

Required tools and hardware:

- wire stripper
- torque driver for M2 binding screws on the HV-PS35 terminal block; flat blade, SZS 0.4 X 2.5 mm
- 2-conductor wire: #28 AWG (minimum) to #16 AWG (maximum)

© 2022-2023 Nokia. Nokia Confidential Information
Use subject to agreed restrictions on disclosure and use.

To connect a DC power feed to the HV-PS35:

Step 1. Prepare the end of the wire at the HV-PS35 input terminal block so that 0.28 in. (7 mm) of copper wire is exposed (see Figure 105, key item 3).

Step 2. Insert the positive wire into the positive (+) receptacle on the right and the negative wire into the negative (–) receptacle on the left of the input terminal block. Tighten the screws to a maximum torque of 1.95 to 2.2 lbf-in (0.22 to 0.25 N·m).

Step 3. Make the far-end HV DC power connection in accordance with local codes.

Danger: DO NOT power on the HV-PS35 at this time. See Powering Up and Initializing.

12.11.2 Connecting the HV-PS35 to an AC Power Source

This section describes how to connect the HV-PS35 to an HV AC power source.

Danger:

- Do not apply power to the HV-PS35. The HV-PS35 does not have an ON/OFF switch. The unit will be powered on if you plug the power cord into an AC power source receptacle.
- Do not plug the far end of the power cord into an AC power source receptacle until instructed to do so.

Note:

- The minimum size/AWG power conductor for the AC input connection from the AC power source to the HV-PS35 must be based on the application, and on the local codes, practices, and regulations applicable for the region.
- In order to comply with the GR-1089 Lightning Criteria for Equipment interfacing with AC Power Ports, an external surge protective device must be used at the AC input of the router or building power service entrance as per the NEC.

© 2022-2023 Nokia. Nokia Confidential Information
Use subject to agreed restrictions on disclosure and use.

Required tools and hardware:

- wire stripper
- torque driver for M2 binding screws on the HV-PS35 terminal block; flat blade, SZS 0.4 X 2.5 mm
- 2-conductor wire, #16 AWG (maximum)

To connect an AC power cord to the HV-PS35:

Step 1. Prepare the end of the wire at the HV-PS35 input terminal block so that 0.28 in. (7 mm) of copper wire is exposed (see Figure 105, key item 3).

Step 2. Do one of the following:

a. For a two-wire conductor, insert the black (or brown) wire into the Line positive (+) receptacle on the right, and the white (or blue) wire into the Neutral negative (–) receptacle on the left of the input terminal block. Tighten the screws to a maximum torque of 1.95 to 2.2 lbf-in (0.22 to 0.25 N·m).

b. For a three-wire conductor, such as an open-ended AC cord with a NEMA 5-15 plug connector, insert the black (or brown) wire into the Line positive (+) receptacle on the right and the white (or blue) wire into the Neutral negative (–) receptacle on the left of the input terminal block. Connect the green wire to the ground screw on the front faceplate, as described in Making the Ground Connection.

Danger: Do not power on the HV-PS35 at this time. See Powering Up and Initializing.

© 2022-2023 Nokia. Nokia Confidential Information
Use subject to agreed restrictions on disclosure and use.

13 Powering Up and Initializing

13.1 In This Chapter

This chapter provides information about initializing and provisioning the router. The topics include:

- Overview and Prerequisites
- Powering Up the Chassis
- Establishing a Console Connection
- Troubleshooting Initial Startup
- Provisioning the 7705 SAR-Hm and 7705 SAR-Hmc

© 2022-2023 Nokia. Nokia Confidential Information
Use subject to agreed restrictions on disclosure and use.

13.2 Overview and Prerequisites

The primary copy of the 7705 SAR-Hm and 7705 SAR-Hmc software is factory-installed on an internal flash drive in directory cf3. When the 7705 SAR-Hm or 7705 SAR-Hmc is first powered on, by default the system searches for the bof.cfg file (also known as the BOF file) on the internal flash memory. The system reads and executes the system initialization commands configured in the boot option file (BOF).

The BOF in the 7705 SAR-Hm and 7705 SAR-Hmc is factory-configured to run an automated initial commissioning process called ADP-Hm. ADP-Hm starts automatically the first time that the 7705 SAR-Hm or 7705 SAR-Hmc is powered on. It is possible to disable ADP after the 7705 SAR-Hm or 7705 SAR-Hmc is powered up for the first time. Refer to the 7705 SAR-Hm and 7705 SAR-Hmc Main Configuration Guide for information about how to disable ADP-Hm after the initial power-up.

When using ADP-Hm to initialize the 7705 SAR-Hm or 7705 SAR-Hmc, the SIM must be installed in slot 1 before powering on the router. See Installing the SIM for more information.

All prerequisites must be fulfilled before using ADP-Hm. Refer to the 7705 SAR-Hm and 7705 SAR-Hmc Main Configuration Guide for information about the ADP-Hm prerequisites.

© 2022-2023 Nokia. Nokia Confidential Information
Use subject to agreed restrictions on disclosure and use.

13.3 Powering Up the Chassis

Note:

- The chassis does not have a power switch or internal circuit breaker to turn the power ON or OFF. The 7705 SAR-Hm or 7705 SAR-Hmc is powered on by applying power from a low-voltage DC power source. The optional HV-PS35 can be used in facilities where a high-voltage DC or AC power source is available.
- For a DC power supply, use a DC-rated circuit breaker or a disconnect device to disconnect the system from the power supply.
- For an AC power supply, unplug the cord to disconnect the system from the power supply.

13.3.1 Power-up and Initialization

To power up the chassis, follow these steps:

Step 1. Turn ON the power to the router at the remote DC power source to initiate the boot process. For systems using high-voltage AC or DC power, apply power to the HV-PS35 from the remote power source to initiate the boot process.

Step 2. Verify that the system is initializing. The Status LED blinks green during initialization. The Alarms LED is off. The software image boots and the configuration file is loaded.

If ADP-Hm is disabled, go to Step 4. Refer to the 7705 SAR-Hm and 7705 SAR-Hmc Main Configuration Guide for details about the ADP-Hm process steps and LED operation during the ADP-Hm process.

Step 3. Verify that the ADP-Hm process starts to run. The Status LED blinks green when ADP-Hm is running and the Alarms LED begins flashing.

Step 4. The Status LED turns solid green when initialization and the ADP-Hm process (if enabled) is complete. If the LEDs do not operate as described in the steps above, or if they blink and turn off, see Troubleshooting Initial Startup.

Step 5. Verify the operational status of the ports by checking the LEDs on the front of the router. See 7705 SAR-Hm and 7705 SAR-Hmc LEDs.

Step 6. (Optional at this time if ADP-Hm is not used for initialization). After verifying the LEDs, establish communication with the router via the Console port. See Establishing a Console Connection.

© 2022-2023 Nokia. Nokia Confidential Information
Use subject to agreed restrictions on disclosure and use.

Step 7. (Optional at this time if ADP-Hm is not used for initialization). Assign an IP address to the router. Refer to the Basic Configuration chapter of the 7705 SAR-Hm and 7705 SAR-Hmc Main Configuration Guide for detailed information about initial configuration.

© 2022-2023 Nokia. Nokia Confidential Information
Use subject to agreed restrictions on disclosure and use.

13.4 Establishing a Console Connection

The Console port on the front of the chassis uses an RJ-45 connector. To establish a console connection, you need the following:

- an ASCII terminal or a PC running terminal emulation software set to the parameters shown in Table 58
- a shielded RJ-45 cable. Shielded cable must be used to maintain EMC compliance. See the Pinout Assignments chapter for more information.

Table 58 **Console Port Default Settings**

Parameter	Value
Gender	DCE
Baud Rate	115 200
Data Bits	8
Parity	None
Stop Bits	1
Flow Control	None

To establish a console connection:

Step 1. Connect the terminal to the Console port on the front panel using a shielded RJ-45 cable.

Step 2. Power on the terminal.

Step 3. Establish the connection by pressing the <Enter> key a few times on your terminal keyboard.

Step 4. At the router prompt, enter the login and password.

Note:

- For the 7705 SAR-Hm, the default login is **admin** and the default password is **admin**.
- The 7705 SAR-Hmc uses a unique one-time password for initial login. Information is provided on a notice card that is shipped with the chassis and in the 7705 SAR-Hm and SAR-Hmc Software Release Notes, Release 21.7.R1 and later.

© 2022-2023 Nokia. Nokia Confidential Information
Use subject to agreed restrictions on disclosure and use.

13.5 Troubleshooting Initial Startup

The 7705 SAR-Hm and 7705 SAR-Hmc TiMOS software is factory-installed. Configurations and executable software is stored locally in the on-board flash memory. The system boots up when power is applied to the chassis.

The system is shipped from the factory with the BOF configured with an empty primary-config file, and with **auto-discover** enabled. Figure 108 displays the directory structure and file names on the integrated flash memory device with the suggested BOF configuration for the primary-config and primary-image files.

The primary-config file is typically located at cf3:/config.cfg. Nokia recommends using the directory structure cf3:/TiMOS-SR-m.n.Yz to hold multiple releases. The location and filenames can be changed in the BOF if required.

Figure 108 **Files on the Integrated Flash Memory Device**

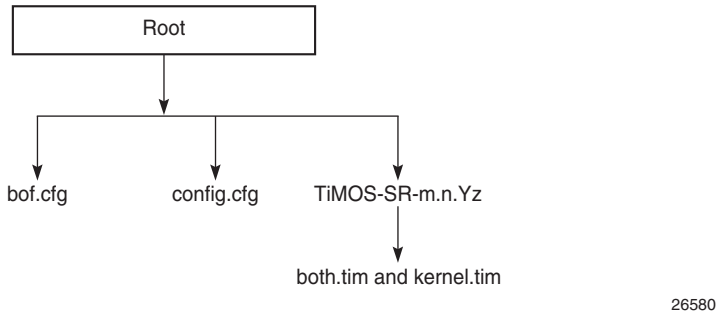

If the system cannot load or cannot find the **bof.cfg** file on the integrated flash memory device (cf3), the system prompts the user for alternate software and configuration file locations. The system will reboot continuously in an attempt to successfully find and load the file. If this happens, the faulty chassis must be returned to Nokia for replacement.

Refer to 7705 SAR-Hm and 7705 SAR-Hmc Main Configuration Guide for a list of files on the integrated flash memory device.

Refer to the 7450 ESS, 7750 SR, 7950 XRS, and VSR Basic System Configuration Guide for a full description of the TiMOS file system.

© 2022-2023 Nokia. Nokia Confidential Information
Use subject to agreed restrictions on disclosure and use.

13.6 Provisioning the 7705 SAR-Hm and 7705 SAR-Hmc

The 7705 SAR-Hm and 7705 SAR-Hmc have a fixed card and MDA configuration that cannot be changed. For the 7705 SAR-Hm, the following permanent configuration is supported in the CLI:

- card type in slot A is **cpm-sar-hm**
- card type in slot 1 is **iom-sar-hm**. The iom-sar-hm supports five permanent MDAs.
- mda type in slot 1/1 is **i2-cellular**, which represents a one-port cellular MDA
- mda type in slot 1/2 is **i6-10/100eth-tx**, which represents a 6-port Fast Ethernet (FE) MDA
- mda type in slot 1/3 is **i2-sdi**, which represents a 2-port RS-232 MDA
- mda type in slot 1/4 is **i1-wlan**
- mda type in slot 1/5 is **isa-tunnel-v**
- mda type in slot 1/6 is **isa-bb-v**

For the 7705 SAR-Hmc, the following permanent configuration is supported in the CLI:

- card type in slot A is **cpm-sar-hmc**
- card type in slot 1 is **iom-sar-hmc**. The iom-sar-hmc supports five permanent MDAs.
- mda type in slot 1/1 is **i2-cellular**, which represents a one-port cellular MDA
- mda type in slot 1/2 is **i3-10/100eth-tx**, which represents a 6-port Fast Ethernet (FE) MDA
- mda type in slot 1/3 is **i2-sdi**, which represents a 2-port RS-232 MDA
- mda type in slot 1/5 is **isa-tunnel-v**
- mda type in slot 1/6 is **isa-bb-v**

© 2022-2023 Nokia. Nokia Confidential Information
Use subject to agreed restrictions on disclosure and use.

The following CLI display shows the factory-provisioned settings on the 7705 SAR-Hm when the **show card state** command is issued.

```
*A:cses-V34# show card state
===============================================================================
Card State
===============================================================================
Slot/  Provisioned Type                  Admin Operational   Num   Num Comments
Id         Equipped Type (if different)  State State         Ports MDA
-------------------------------------------------------------------------------
1      iom-sar-hm                        up    up                  6
1/1    i2-cellular                       up    up            2
1/2    i6-10/100eth-tx                   up    up            6
1/3    i2-sdi                            up    up            2
1/4    i1-wlan                           up    up            2
1/5    isa-tunnel-v                      up    up            2
1/6    (not provisioned)                 up    unprovisioned
       isa-bb-v
A      cpm-sar-hm                        up    up                      Active
===============================================================================
*A:cses-V34#
```

The following CLI display shows the factory-provisioned settings on the 7705 SAR-Hmc when the **show card state** command is issued.

```
*A:cses-V34# show card state
===============================================================================
Card State
===============================================================================
Slot/  Provisioned Type                  Admin Operational   Num   Num Comments
Id         Equipped Type (if different)  State State         Ports MDA
-------------------------------------------------------------------------------
1      iom-sar-hmc                       up    up                  6
1/1    i2-cellular                       up    up            1
1/2    i3-10/100eth-tx                   up    up            3
1/3    i2-sdi                            up    up            2
1/5    (not provisioned                  up    unprovisioned
       isa-tunnel-v
1/6    (not provisioned)                 up    unprovisioned
       isa-bb-v
A      cpm-sar-hmc                       up    up                      Active
===============================================================================
*A:cses-V34#
```

Refer to the card and port configuration sections in the 7705 SAR-Hm and 7705 SAR-Hmc Interface Configuration Guide for more information.

© 2022-2023 Nokia. Nokia Confidential Information
Use subject to agreed restrictions on disclosure and use.

14 7705 SAR-Hm and 7705 SAR-Hmc LEDs

14.1 In This Chapter

This chapter provides information about the LEDs on the faceplate and ports of the 7705 SAR-Hm and 7705 SAR-Hmc. The topics include:

- 7705 SAR-Hm and 7705 SAR-Hmc Faceplate LEDs
- 7705 SAR-Hm and 7705 SAR-Hmc RJ-45 Connector LEDs

© 2022-2023 Nokia. Nokia Confidential Information
Use subject to agreed restrictions on disclosure and use.

14.2 7705 SAR-Hm and 7705 SAR-Hmc Faceplate LEDs

Figure 109 identifies the LEDs on the 7705 SAR-Hm faceplate. Table 59 describes the key items for the 7705 SAR-Hm.

Figure 109 **7705 SAR-Hm Faceplate LEDs**

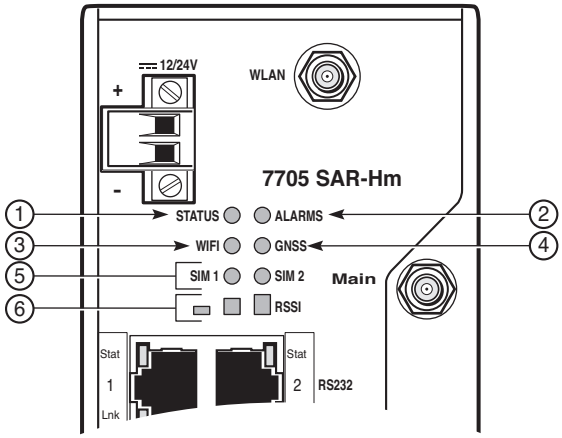

© 2022-2023 Nokia. Nokia Confidential Information
Use subject to agreed restrictions on disclosure and use.

Table 59 **7705 SAR-Hm Faceplate LED Descriptions**

Key	Label/Part	Description
1	STATUS	The system STATUS LED indicates the combined status of the router's main functional blocks (the control and switching functional block, the Ethernet ports functional block, and the RS-232 ports functional block). Blocks that are administratively shut down are not included in the combined status indicated by this LED. **Green (blinking)**: Indicates that the system is booting up and running hardware and software diagnostics **Green (solid)**: Indicates that the system is administratively up and operationally up **Unlit**: Indicates that the system is operationally down, or there is no power The following LED states apply to the ADP-Hm process: **Green (blinking)**: Indicates one of the following: • The ADP-Hm processes are running • The system is booting up the TiMOS image and running hardware and software diagnostics **Green (solid)**: Indicates one of the following: • ADP-Hm is disabled and the system is operationally up • The ADP-Hm process is complete for the one-step process and the system is operationally up • The ADP-Hm process has completed step one of the two-step process and the system is ready to be powered down, installed at its final location, and powered back up to complete step two of the two-step process • The ADP-Hm process is complete for step two of the two-step process and the system is operationally up
2	ALARMS	**Red (solid)**: Indicates that a critical alarm has been raised or that the system is over temperature; major and minor alarms may be outstanding **Red (blinking)**: Indicates that a major alarm has been raised; minor alarms may be outstanding but no critical alarms have been raised **Yellow (solid)**: Indicates that a minor alarm has been raised; no critical or major alarms are outstanding The following LED states apply to the ADP-Hm process: **Yellow (one blink followed by a pause, then repeats)**: Indicates that the ADP-Hm Network Discovery process is running **Yellow (two blinks followed by a pause, then repeats)**: Indicates that the ADP-Hm NSP NFM-P Discovery process is running
3	WIFI	**Unlit**: Indicates that the radio is not enabled because it is administratively down or not configured **Green (blink)**: Indicates that the radio is up but a WLAN access point (AP) or client is scanning **Green (solid)**: Indicates that one or more WLAN AP is up or the client is connected

© 2022-2023 Nokia. Nokia Confidential Information
Use subject to agreed restrictions on disclosure and use.

Table 59 **7705 SAR-Hm Faceplate LED Descriptions (Continued)**

Key	Label/Part	Description
4	GNSS	**Green (blinking)**: Indicates that GNSS is enabled and is acquiring a fix **Green (solid)**: Indicates that GNSS is enabled and has acquired a fix **Unlit**: Indicates that GNSS is disabled
5	SIM 1 SIM 2	**Green (solid)**: Indicates that the SIM is present and is readable by the cellular modem **Unlit**: Indicates that the SIM is not present or that the modem cannot read the SIM card
6	RSSI	The Received Signal Strength Indicator (see Table 61 for the LED descriptions)

Figure 110 identifies the LEDs on the 7705 SAR-Hmc faceplate. Table 60 describes the key items for the 7705 SAR-Hmc.

Figure 110 **7705 SAR-Hmc Faceplate LEDs**

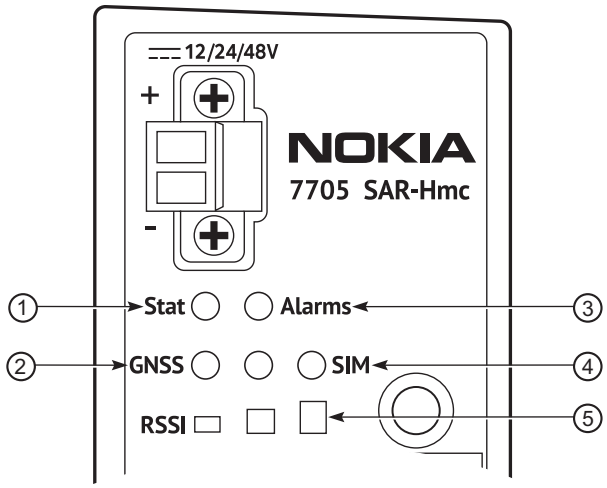

© 2022-2023 Nokia. Nokia Confidential Information
Use subject to agreed restrictions on disclosure and use.

Table 60 **7705 SAR-Hmc Faceplate LED Descriptions**

Key	Label/Part	Description
1	STATUS	The system STATUS LED indicates the combined status of the router's main functional blocks (the control and switching functional block, the Ethernet ports functional block, and the RS-232 ports functional block). Blocks that are administratively shut down are not included in the combined status indicated by this LED. **Green (blinking)**: Indicates that the system is booting up and running hardware and software diagnostics **Green (solid)**: Indicates that the system is administratively up and operationally up **Unlit**: Indicates that the system is operationally down, or there is no power The following LED states apply to the ADP-Hm process: **Green (blinking)**: Indicates one of the following: • The ADP-Hm processes are running • The system is booting up the TiMOS image and running hardware and software diagnostics **Green (solid)**: Indicates one of the following: • ADP-Hm is disabled and the system is operationally up • The ADP-Hm process is complete for the one-step process and the system is operationally up • The ADP-Hm process has completed step one of the two-step process and the system is ready to be powered down, installed at its final location, and powered back up to complete step two of the two-step process • The ADP-Hm process is complete for step two of the two-step process and the system is operationally up
2	GNSS	**Green (blinking)**: Indicates that GNSS is enabled and is acquiring a fix **Green (solid)**: Indicates that GNSS is enabled and has acquired a fix **Unlit**: Indicates that GNSS is disabled
3	ALARMS	**Red (solid)**: Indicates that a critical alarm has been raised; major and minor alarms may be outstanding **Red (blinking)**: Indicates that a major alarm has been raised; minor alarms may be outstanding but no critical alarms have been raised **Yellow (solid)**: Indicates that a minor alarm has been raised; no critical or major alarms are outstanding The following LED states apply to the ADP-Hm process: **Yellow (one blink followed by a pause)**: Indicates that the ADP-Hm process is running **Yellow (two blinks followed by a pause)**: Indicates that the ADP-Hm The ADP process has completed step 1 of the two-step ADP process and can be powered down for site installation
4	SIM 1 SIM 2	**Green (solid)**: Indicates that the SIM is present and is readable by the cellular modem **Unlit**: Indicates that the SIM is not present or that the modem cannot read the SIM card
5	RSSI	The Received Signal Strength Indicator (see Table 61 for the LED descriptions)

© 2022-2023 Nokia. Nokia Confidential Information
Use subject to agreed restrictions on disclosure and use.

The 7705 SAR-Hm and 7705 SAR-Hmc RSSI have three LEDs. The state of the RSSI LEDs is determined by a number of signal strength bars. When the system is attached to an LTE network, the number of bars is derived from the modem's reported Received Signal Reference Power (RSRP). When attached to a 3G network, the number of bars is derived from the modem's reported Received Signal Code Power (RSCP) and Received Signal Strength Indicator (RSSI).

The number of bars is indicated by the color schema of the three LEDs, as described in Table 61.

Table 61 **7705 SAR-Hm and 7705 SAR-Hmc RSSI LEDs**

Bars	Left LED	Middle LED	Right LED
5	Green	Green	Green
4	Green	Green	Yellow
3	Green	Green	Unlit
2	Green	Yellow	Unlit
1	Green	Unlit	Unlit
0 — Port Enabled	Yellow	Unlit	Unlit
0 — Port Disabled	Unlit	Unlit	Unlit

© 2022-2023 Nokia. Nokia Confidential Information
Use subject to agreed restrictions on disclosure and use.

14.3 7705 SAR-Hm and 7705 SAR-Hmc RJ-45 Connector LEDs

Figure 111 identifies the RJ-45 connectors and LEDs on the 7705 SAR-Hmc; Table 62 describes the key items in the figure.

Figure 111 **7705 SAR-Hm RJ-45 Connector LEDs**

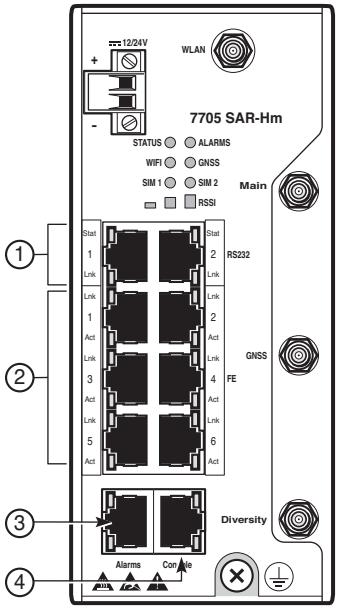

26457

Table 62 **7705 SAR-Hm RJ-45 Connector LED Descriptions**

Key	Label/Part	Sub-category	Description
1	RS232	RJ-45 connector	Two RS-232 ports each have an RJ-45 connector and are used for raw socket transport. The RS-232 port number (1 and 2) is displayed on each port.
		Stat LED	RS-232 serial status LEDs: **Green (solid)**: Indicates that the port is active **Unlit**: Indicates that the port is down, disabled, or in a loopback state
		Lnk LED	RS-232 link status LEDs: **Yellow (blinking)**: Indicates that the port is in a loopback state **Unlit**: Indicates that the port is not in a loopback state

© 2022-2023 Nokia. Nokia Confidential Information
Use subject to agreed restrictions on disclosure and use.

Table 62 **7705 SAR-Hm RJ-45 Connector LED Descriptions (Continued)**

Key	Label/Part	Sub-category	Description
2	FE	RJ-45 connector	Six Fast Ethernet (FE) ports have an RJ-45 connector for attaching user devices.
		Lnk LED	**Green (solid)**: Indicates that the link is up **Unlit**: Indicates that there is no link or that the link is operationally down, disabled, or shut down
		Act LED	**Yellow (blinking)**: Indicates that the port is active (receiving or transmitting) **Unlit**: Indicates that the port is not active
3	Alarms	RJ-45 connector	The Alarms port does not have LEDs.
4	Console	RJ-45 connector	The Console port does not have LEDs.

Figure 112 identifies the RJ-45 connectors and LEDs on the 7705 SAR-Hmc; Table 63 describes the key items in the figure.

Figure 112 **7705 SAR-Hmc RJ-45 Connector LEDs**

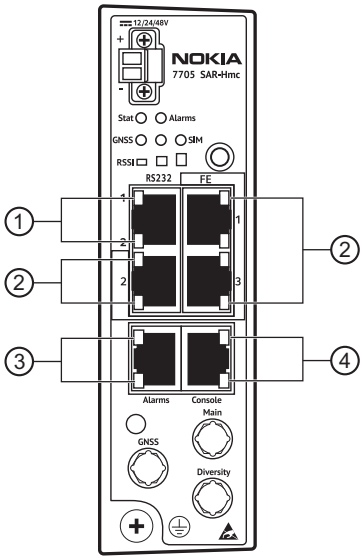

35688

© 2022-2023 Nokia. Nokia Confidential Information
Use subject to agreed restrictions on disclosure and use.

Table 63 **7705 SAR-Hmc RJ-45 Connector LED Descriptions**

Key	Label/Part	Sub-category	Description
1	RS232	RJ-45 connector	Two RS-232 ports are supported in a single RJ-45 connector and are used for raw socket transport. The RS-232 port number (1 and 2) is displayed on each port.
		Stat LED	RS-232 serial status LEDs: **Green (solid)**: Indicates that the port is active **Unlit**: Indicates that the port is down, disabled, or in a loopback state
		Lnk LED	RS-232 serial link LEDs: **Yellow (blinking)**: Indicates that the port is in a loopback state **Unlit**: Indicates that the port is not in a loopback state
2	FE	RJ-45 connector	Three Fast Ethernet (FE) ports have an RJ-45 connector for attaching user devices.
		Lnk LED	**Green (solid)**: Indicates that the link is up **Unlit**: Indicates that there is no link or that the link is operationally down, disabled, or shut down
		Act LED	**Yellow (blinking)**: Indicates that the port is active (receiving or transmitting) **Unlit**: Indicates that the port is not active
3	Alarms	RJ-45 connector	The Alarms port does not have LEDs.
4	Console	RJ-45 connector	The Console port does not have LEDs.

© 2022-2023 Nokia. Nokia Confidential Information
Use subject to agreed restrictions on disclosure and use.

© 2022-2023 Nokia. Nokia Confidential Information
Use subject to agreed restrictions on disclosure and use.

15 Pinout Assignments

15.1 In This Chapter

This chapter provides information about the pinout assignments for the following port connectors on the 7705 SAR-Hm and 7705 SAR-Hmc:

- Console Port Pinout Assignments
- Alarms Port Pinout Assignments
- Ethernet Ports Pinout Assignments
- RS-232 Ports Pinout Assignments

© 2022-2023 Nokia. Nokia Confidential Information
Use subject to agreed restrictions on disclosure and use.

15.2 Console Port Pinout Assignments

The Console port on the 7705 SAR-Hm and 7705 SAR-Hmc uses an RJ-45 connector to provide serial console access to the 7705 SAR-Hm or 7705 SAR-Hmc CLI. The Console port is used to configure router and system parameters. It can also be used for monitoring purposes.

The port only supports the default baud rate of 115 200 b/s.

Figure 113 shows the Console port pin numbers.

Figure 113 **Console Port Pin Numbers**

15.2.1 Console Port Pinouts

Table 64 specifies the Console port pinout assignments.

Table 64 **Console Port Pinouts—RJ-45**

Pin	Signal	Direction	Description
1	NC	—	Not connected
2	NC	—	Not connected
3	TXD	Output	Transmit data
4	GND	Serial ground	Serial ground
5	GND	Serial ground	Serial ground
6	RXD	Input	Receive data
7	NC	—	Not connected
8	NC	—	Do not connect

© 2022-2023 Nokia. Nokia Confidential Information
Use subject to agreed restrictions on disclosure and use.

15.3 Alarms Port Pinout Assignments

The Alarms port on the 7705 SAR-Hm and 7705 SAR-Hmc uses an RJ-45 connector. On the 7705 SAR-Hm, the connector provides access to two sets of alarm output contacts and three alarm inputs. On the 7705 SAR-Hmc, the connector provides access to three alarm inputs. All alarm interfaces are rated for 5 VDC and 100 mA (source or sink). The alarm connector is classified for indoor use and permanent connection.

Each of the three alarm inputs can be configured with the following:

- name
- description
- administrative state (shut down or not shut down)
- detect and clear debounce timers
- association with up to four user-defined alarms with configurable descriptions, severity, and actions

The alarm inputs must be associated with an alarm in order for them to be triggered.

There is no Alarm Cut Off/Lamp Test (ACO/LT) button on the chassis. Alarm states must be cleared using a management interface (either CLI or SNMP).

You can configure the alarm inputs using the **configure>system>alarm-contact-input** CLI command and sub-commands. To display the status of the alarm inputs, use the **show>system>alarm-contact-input all** CLI command. Refer to the 7705 SAR-Hm and 7705 SAR-Hmc Interface Configuration Guide for more information.

The pins on the external alarms connector can also be configured to trigger a log event with a configurable severity using the **trigger-alarm-msg** command in the **configure>system>alarm-contact-input** context. For information about how to configure the log events on the pins, refer to the “System Alarm Contact Input Commands” section of the 7450 ESS, 7750 SR, 7950 XRS, and VSR Basic System Configuration Guide.

Figure 114 shows the Alarms port pin numbers.

© 2022-2023 Nokia. Nokia Confidential Information
Use subject to agreed restrictions on disclosure and use.

Figure 114 **Alarms Port Pin Numbers**

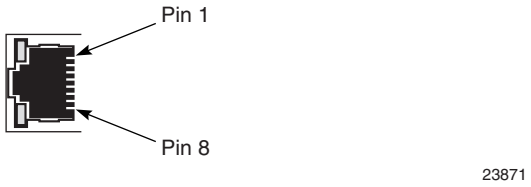

15.3.1 External Alarms Port Pinouts

Table 65 specifies the External Alarms port pinout assignments.

Table 65 **External Alarms Port Pinouts—RJ-45 Female**

Pin	Signal	Direction	Description
1	Alarm input 1	Input	User-configurable
2	Alarm input 2	Input	User-configurable
3	Alarm input 3	Input	User-configurable
4	Ground	Reference	Reference output for alarm inputs
5	Alarm output 1, pin 1	Output	Contact opens on alarm (N/A on the 7705 SAR-Hmc)
6	Alarm output 1, pin 2	Output	Contact opens on alarm (N/A on the 7705 SAR-Hmc)
7	Alarm output 2, pin 1	Output	Contact opens on alarm (N/A on the 7705 SAR-Hmc)
8	Alarm output 2, pin 2	Output	Contact opens on alarm (N/A on the 7705 SAR-Hmc)

© 2022-2023 Nokia. Nokia Confidential Information
Use subject to agreed restrictions on disclosure and use.

15.3.2 Alarm Examples

Table 66 lists critical, major, minor, and warning alarm examples.

Table 66 **Alarm Events**

Alarm Severity	Events
Critical	A critical external alarm has been detected
Major	An over-temperature condition has been detected A major external alarm has been detected
Minor	A minor external alarm has been detected
Warning	The interface becomes operational/non-operational

© 2022-2023 Nokia. Nokia Confidential Information
Use subject to agreed restrictions on disclosure and use.

15.4 Ethernet Ports Pinout Assignments

The 7705 SAR-Hm chassis has six 10/100Base-T RJ-45 Fast Ethernet (FE) ports and the 7705 SAR-Hmc has three 10/100Base-T RJ-45 FE ports.

Figure 115 shows the pin numbering for the RJ-45 connector.

Figure 115 **Ethernet Port RJ-45 Connector Pin Numbers**

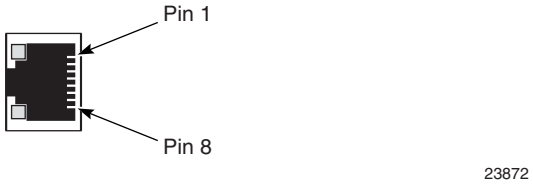

15.4.1 Ethernet Port Pinouts

Table 67 specifies the Ethernet port pinout assignments.

Table 67 **Ethernet Port Pinouts—RJ-45 Female**

Pin	Signal	Direction	Description
1	TX+	Output	Differential transmit data – positive
2	TX-	Output	Differential transmit data – negative
3	RX+	Input	Differential receive data – positive
4	NC	—	Not connected
5	NC	—	Not connected
6	RX-	Input	Differential receive data – negative
7	NC	—	Not connected
8	NC	—	Not connected

© 2022-2023 Nokia. Nokia Confidential Information
Use subject to agreed restrictions on disclosure and use.

15.5 RS-232 Ports Pinout Assignments

The 7705 SAR-Hm and 7705 SAR-Hmc have two asynchronous RS-232 serial ports. The RS-232 ports use RJ-45 connectors.

The 7705 SAR-Hmc supports two RS-232 ports in a single RJ-45 connector. A 7705 SAR-Hmc RS-232 Y-Cable (3HE12554AA) is required for the RJ-45 connector when connecting to both RS-232 ports. If only a single RS-232 connection is needed, the RS-232 Y-Cable is not required. The cable is wired using the pinouts shown in Table 72.

The serial ports support the raw socket-based transport of serial data. Refer to the 7705 SAR-Hm and 7705 SAR-Hmc Interface Configuration Guide for more information.

Figure 116 shows the pin numbering.

Figure 116 **RS-232 RJ-45 Connector Pin Numbers**

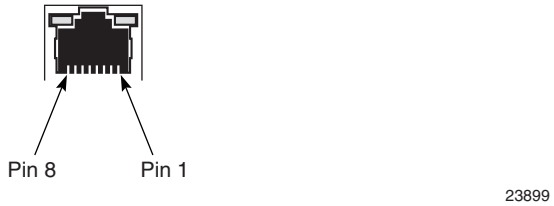

15.5.1 RS-232 Port Pinouts

Table 68 specifies the RS-232 port pinout assignments on the 7705 SAR-Hm. Table 69 specifies the RJ-45 port pinouts on the 7705 SAR-Hmc. Table 70 specifies the pinouts on the 7705 SAR-Hmc RS-232 Y-Cable female Port 1 end. Table 71 specifies the pinouts on the 7705 SAR-Hmc RS-232 Y-Cable female Port 2 end. Table 72 specifies the cable pinouts on the 7705 SAR-Hmc when an RS-232 Y-Cable is not used.

The pinouts on the 7705 SAR-Hmc RS-232 Y-Cable male end are the same as those shown in Table 69.

© 2022-2023 Nokia. Nokia Confidential Information
Use subject to agreed restrictions on disclosure and use.

Table 68 **7705 SAR-Hm RS-232 Port Pinouts—RJ-45 Female**

Pin	Signal	Description
1	RI	Ring indicator
2	DCD	Carrier detect
3	DTR	Data terminal ready
4	GND	Signal/common ground
5	RXD	Receive data
6	TXD	Transmit data
7	CTS	Clear to send
8	RTS	Request to send

Table 69 **7705 SAR-Hmc RJ-45 Port Pinouts**

Pin	Signal	Description
1	RXD2	Receive Data — Port 2
2	TXD2	Transmit Data — Port 2
3	GND2	Signal/common ground — Port 2
4	GND1	Signal/common ground — Port 1
5	RXD1	Receive data — Port 1
6	TXD1	Transmit data — Port 1
7	CTS1	Clear to send — Port 1
8	CTS2	Clear to send — Port 2

Table 70 **Pinouts on the 7705 SAR-Hmc RS-232 Y-Cable Female Port 1 End**

Pin	Signal	Description
1	N/C	N/A
2	N/C	N/A
3	N/C	N/A
4	GND1	Signal/common ground — Port 1

© 2022-2023 Nokia. Nokia Confidential Information
Use subject to agreed restrictions on disclosure and use.

Table 70 **Pinouts on the 7705 SAR-Hmc RS-232 Y-Cable Female Port 1 End (Continued)**

Pin	Signal	Description
5	RXD1	Receive data — Port 1
6	TXD1	Transmit data — Port 1
7	CTS1	Clear to send — Port 1
8	N/C	N/A

Table 71 **Pinouts on the 7705 SAR-Hmc RS-232 Y-Cable Female Port 2 End**

Pin	Signal	Description
1	N/C	N/A
2	N/C	N/A
3	N/C	N/A
4	GND2	Signal/common ground — Port 2
5	RXD2	Receive data — Port 2
6	TXD2	Transmit data — Port 2
7	CTS2	Clear to send — Port 2
8	N/C	N/A

Table 72 **Pinouts on a 7705 SAR-Hmc Single-Port Cable— RJ-45 Female**

Pin	Signal	Description
1	N/C	N/A
2	N/C	N/A
3	N/C	N/A
4	GND1	Signal/common ground — Port 1
5	RXD1	Receive data — Port 1
6	TXD1	Transmit data — Port 1
7	CTS1	Clear to send — Port 1
8	N/C	N/A

© 2022-2023 Nokia. Nokia Confidential Information
Use subject to agreed restrictions on disclosure and use.

© 2022-2023 Nokia. Nokia Confidential Information
Use subject to agreed restrictions on disclosure and use.

16 Standards and Protocol Support

This chapter lists the specifications to which the 7705 SAR-Hm complies. The standards are grouped under the following categories:

- Safety
- Electromagnetic Compatibility
- Environmental
- Railway
- Power Utility Substations
- Radio
- Directives, Regional Approvals, and Certifications
- Telecom Interoperability

© 2022-2023 Nokia. Nokia Confidential Information
Use subject to agreed restrictions on disclosure and use.

16.1 Safety

Table 73 **Safety Standards Compliance**

ANSI/UL 60079-0:2019
ANSI/UL60079-7:2017 5th Edition
CSA C22.2 No. 60079-0:19
CAN/CSA-C22.2 No. 60079-7:16
UL/CSA 60950-1
UL/CSA 62368-1
IEC/EN 60950-1
IEC/EN 62368-1
AS/NZS 60950-1
IEC 60529

© 2022-2023 Nokia. Nokia Confidential Information
Use subject to agreed restrictions on disclosure and use.

16.2 Electromagnetic Compatibility

Table 74 **Electromagnetic Compatibility**

CISPR 32 (Class A)
ICES-003 (Class A)
FCC Part 15, (Class A) Subpart B
EN 55032 (Class A)
AS/NZS CISPR 32 (Class A)
VCCI V-3/2015 (Japan)
KC Notice Emission (KN32) and Immunity (KN35) (South Korea)
KN 301 489-1
KN 301 489-7 (GSM)
KN 301 489-52 (LTE)
KN 301 489-17 (WIFI)
EN 301 489-1
EN 301 489-7 (GSM)
EN 301 489-17 (WIFI)
EN 301 489-19 (GNSS)
EN 301 489-52 (LTE)
IEC 61000-6-2
IEC 61000-6-4
IEC 61000-3-2
IEC 61000-3-3
IEC 61000-4-2
IEC 61000-4-3
IEC 61000-4-4
IEC 61000-4-5
IEC 61000-4-6
IEC 61000-4-8
IEC 61000-4-10
IEC 61000-4-11
IEC 61000-4-12

© 2022-2023 Nokia. Nokia Confidential Information
Use subject to agreed restrictions on disclosure and use.

Table 74 **Electromagnetic Compatibility (Continued)**

IEC 61000-4-16
IEC 61000-4-17
IEC 61000-4-18
IEC 61000-4-29

© 2022-2023 Nokia. Nokia Confidential Information
Use subject to agreed restrictions on disclosure and use.

16.3 Environmental

Table 75 **Environmental Standards Compliance**

ETSI EN 300 019-2-1, Class 1.2
ETSI EN 300 019-2-2, Class 2.3
ETSI EN 300 019-2-3; Operational, Class 3.2
IEC 60255-21-1/ 2/3

© 2022-2023 Nokia. Nokia Confidential Information
Use subject to agreed restrictions on disclosure and use.

16.4 Railway

Table 76 **Railway Compliance**

EN 50121-4
IEC 62236-4
EN 50155
IEC/EN 61373 (Category 1; Class B

© 2022-2023 Nokia. Nokia Confidential Information
Use subject to agreed restrictions on disclosure and use.

16.5 Power Utility Substations

Table 77 **Power Utility Substations Compliance**

IEEE 1613-Class 2
IEEE 1613.1-Zone A, Class 2
IEC 61850-3
IEC/AS 60870.2.1
IEC 61000-6-5

© 2022-2023 Nokia. Nokia Confidential Information
Use subject to agreed restrictions on disclosure and use.

16.6 Radio

Table 78 **Radio Compliance**

RSS- GEN
RSSS-130 (Band 12 and 13)
RSS-132 (Band 5)
RSS-133 (Band 2)
RSS-199 (Band 7)
RSS-139 (Band 4)
RSS-247 (WiFi)
RSS-102 (RF Exposure)
FCC OET Bulletin 65 (RF Exposure)
FCC Part 22
FCC Part 24
FCC Part 27 (WCS)
FCC Part 15 Subpart C (WiFi)
FCC Part 90
FCC Part 96 (CBRS) (7705 SAR-Hmc only)
EN 301 908-1 (LTE/WCDMA)
EN 301 908-13 (LTE)
EN 301 511 (GSM)
EN 300 328 (2.4GHz WiFi)
EN 301 893 (5GHz WiFi)
EN 62311 – (RF Exposure)
EN 303 413 – (GNSS)

© 2022-2023 Nokia. Nokia Confidential Information
Use subject to agreed restrictions on disclosure and use.

16.7 Directives, Regional Approvals, and Certifications

Table 79 **Directives, Regional Approvals, and Certifications Compliance**

EU Directive 2014/34/EU ATEX
EU Directive 2014/53/EU (RED)
EU Directive 2014/30/EU (EMC)
EU Directive 2014/35/EU (LVD)
EU Directive 2012/19/EU (WEEE)
EU Directive 2011/65/EU (Recast) (including Commission Delegated Directive (EU) 2015/863)
China RoHS
Australia: RCM Mark
South Korea: KC Mark
Japan: VCCI Mark
Europe: CE Mark

© 2022-2023 Nokia. Nokia Confidential Information
Use subject to agreed restrictions on disclosure and use.

16.8 Telecom Interoperability

Table 80 **Telecom Interoperability**

IEEE 802.3 (Ethernet)
ANSI/TIA/EIA-232C- (RS422)
ITU-T V.24 Feb 2000 (RS232)
IEEE 802.11 b/g/n (WLAN

© 2022-2023 Nokia. Nokia Confidential Information
Use subject to agreed restrictions on disclosure and use.

17 Appendix - 7705 SAR-Hmc Direct Mount Template

See next page for the template; print at 100%.

© 2022-2023 Nokia. Nokia Confidential Information
Use subject to agreed restrictions on disclosure and use.

7705 SAR-Hmc Direct Mount Template

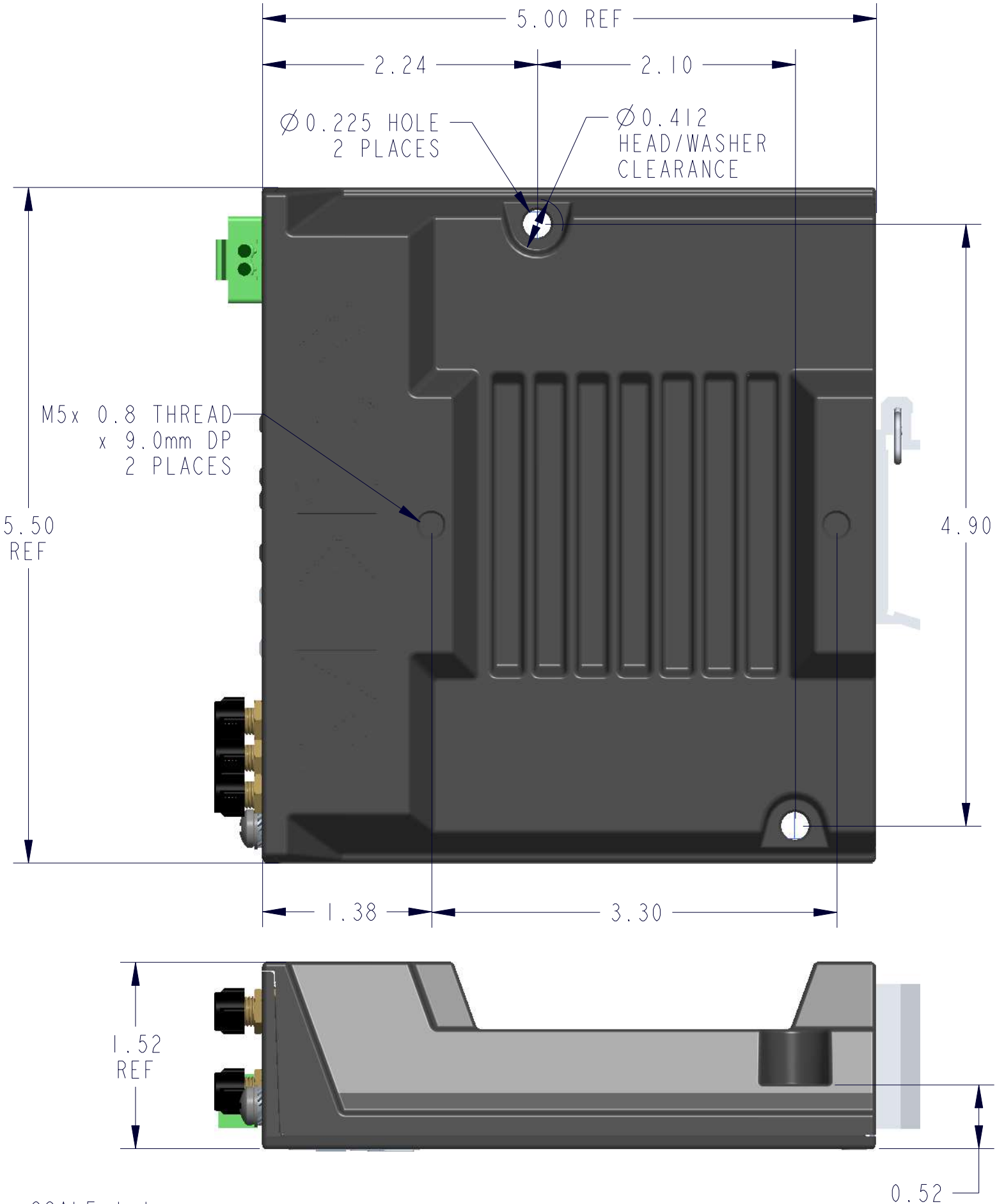

SCALE 1:1
RECOMMENDED SCREW/BOLT SIZE: #10-32 (M5)

Customer Document and Product Support

Customer Documentation

Customer Documentation Welcome Page

Technical Support

Product Support Portal

Documentation Feedback

Customer Documentation Feedback

© 2022-2023 Nokia.
3HE 19133 AAAA TQZZA