REVISIONS			
REV	CO/PRN	DATE	APPROVED
-	161664	8/99	JN
A	161215	9/99	JN

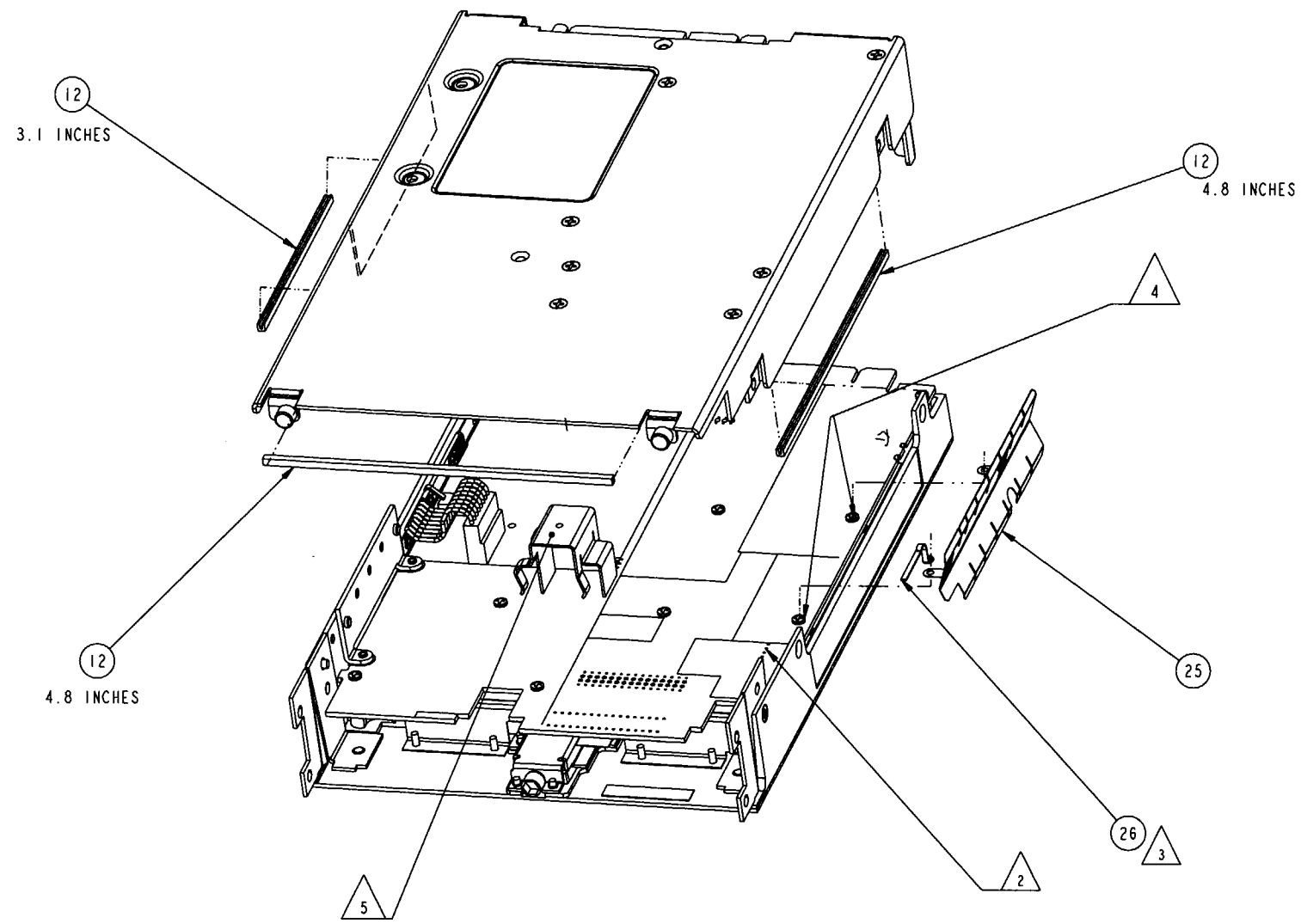

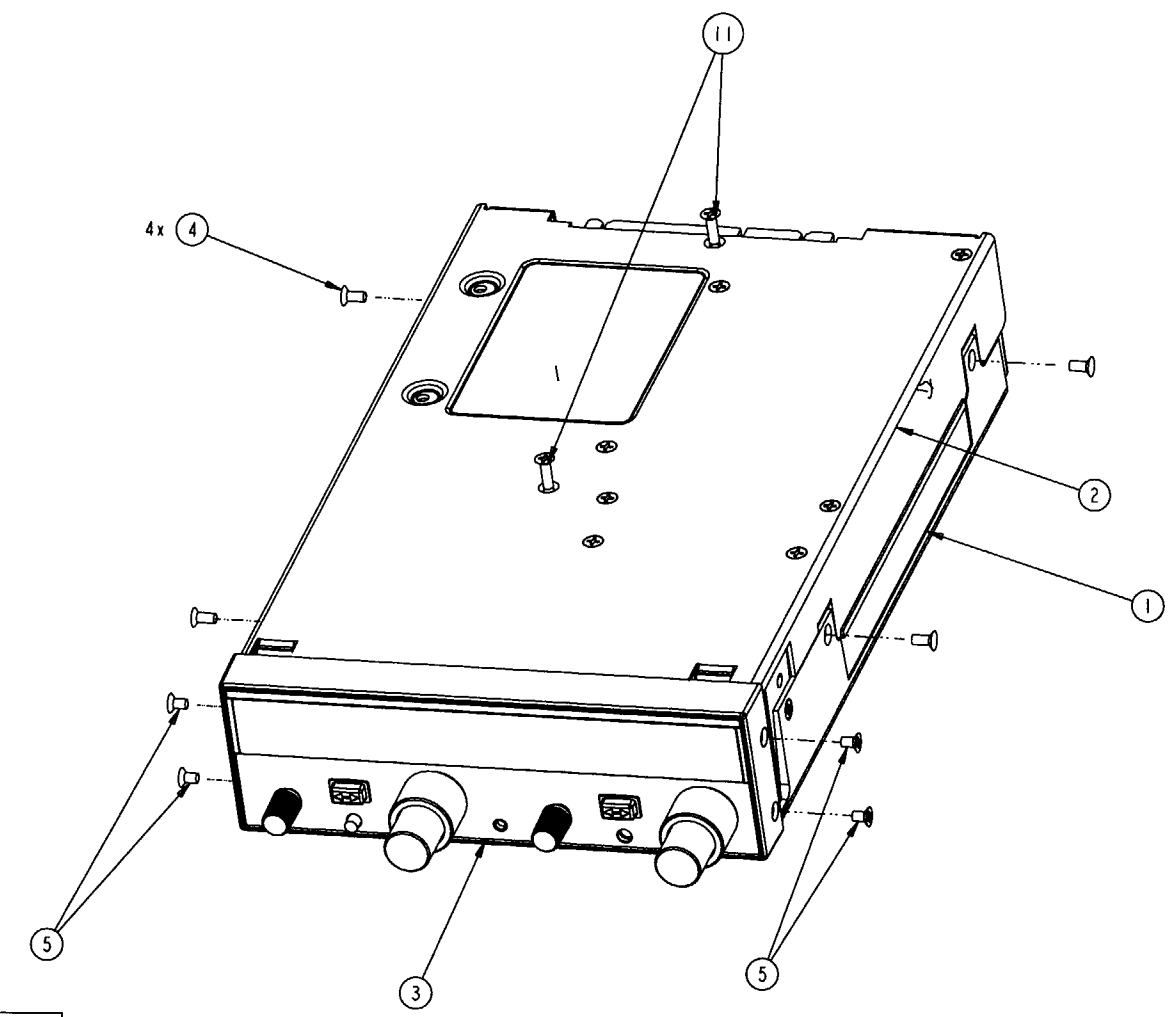

NOTES

1. CUT ITEM 12 TO INDICATED LENGTHS BEFORE INSTALLING.
2. CONNECT GLIDESLOPE CABLE (FROM ITEM 2) TO INDICATED LOCATION ON MAIN BOARD (PART OF ITEM 1). DRESS CABLE SO THAT IT WILL NOT BE PINCHED WHEN UNIT IS ASSEMBLED.
3. PREFORM ITEM 26 BEFORE INSTALLING. SEE DETAIL A.
4. INSTALL ITEMS 25 AND 26 USING INDICATED SCREWS.
5. APPLY THERMAL JOINT COMPOUND (ITEM 24) TO INDICATED SURFACE BEFORE INSTALLING ITEM 2.
6. LIQUID STAKE ALL FASTENERS PER SPECIFICATION 001-01080-0000.
7. APPLY SOFTWARE IDENTIFICATION TAG, 057-05287-XXXX (FROM 206-00379-XXXX). AS SHOWN.
8. UNIT IS SHIPPED IN MOUNTING RACK, ITEM 6.

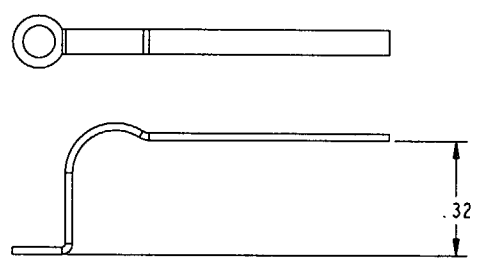

PREFORM ITEM 26 AS SHOWN.
INSTALL SO THAT GLIDESLOPE
CONNECTOR IS RESTRAINED.

DETAIL A

THIS DRAWING IS NOT COMPLETE WITHOUT
PARTS LIST 069-01033-XXXX .

AUTHORIZED PRINT

AlliedSignal Proprietary

This document and all information and expression contained herein are the property of AlliedSignal Inc. are lent in confidence, and may not, in whole or, in part, be used, duplicated or disclosed for any purpose without prior written permission of AlliedSignal.
This document is an unpublished work.
Copyright 1998 AlliedSignal Inc., All rights reserved.

---	KX165A	-0001	PART NO	DESCRIPTION	FIND NO
NEXT ASSY	UNIT				
TOL UNLESS NOTED .XX ±0.02 .XXX ±0.010 ANGLES ±0.5°	ME NEWSHAM		AlliedSignal Inc. Olathe, Kansas USA CAGE: 22373		
	EE TRIPLETT				
MATERIAL	DRN NEWSHAM		NAME KX165A FINAL ASSEMBLY		
	DATE 26-AUG-99				
FINISH	PRO/E FILENAMES 300-09095-0010.dwg SOLDER,LUG PART	SCALE NONE	P/N RANGE NONE	DOCUMENT NUMBER 300-09095-0010	SHT 1 OF 2

1.5 Released

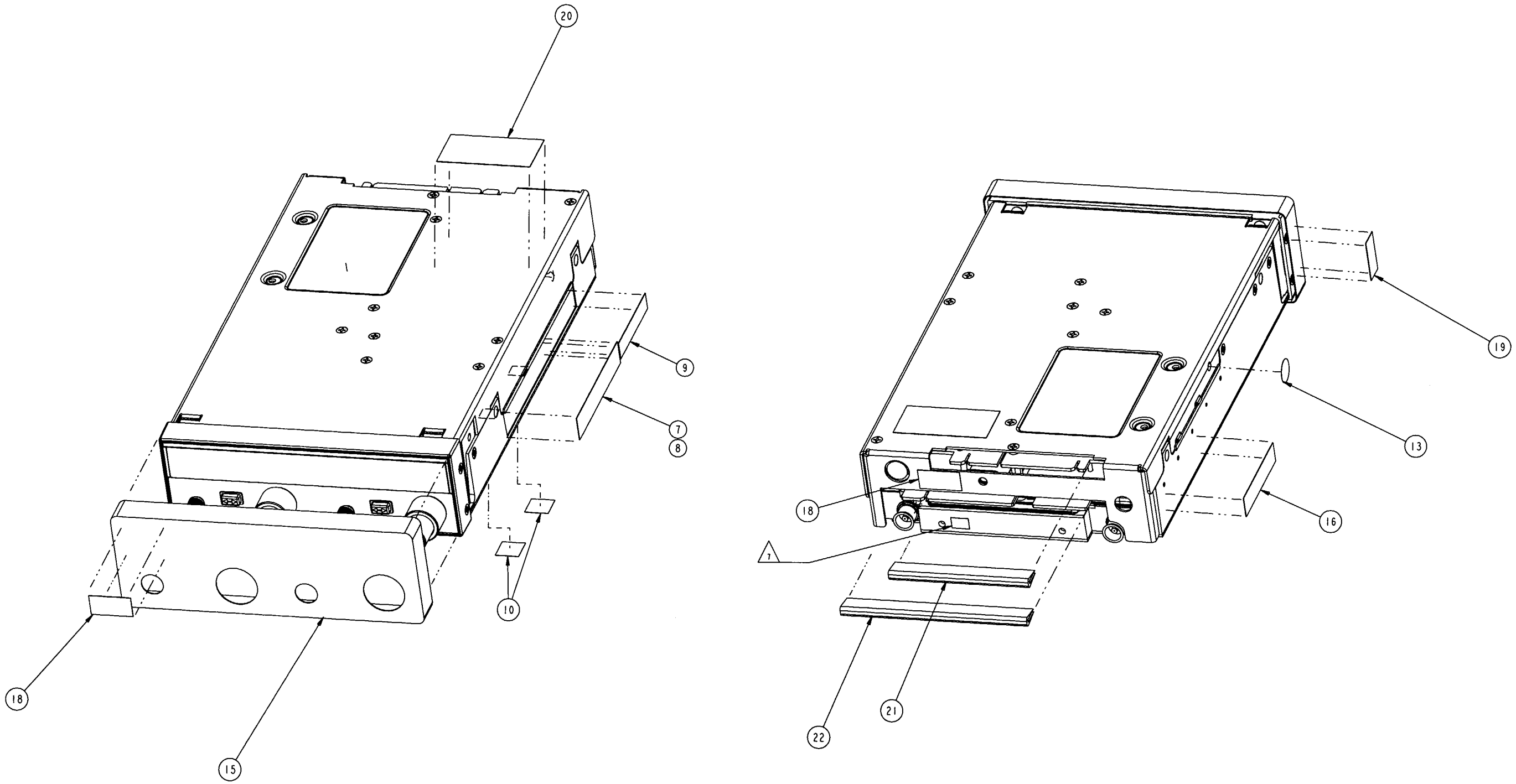

REV	DOCUMENT NUMBER	SHEET 2 OF 2
A	300-09095-0010	