4300 SERIES MOBILE RADIO

APCO Project 25 Conventional and Trunked SMARTNET®/SmartZone® Analog (FM) Conventional

VHF 20 Watts Part No. 242-43xx-xxx

Copyright© 2004 by the E.F. Johnson Company

The EFJohnson Company, which was founded in 1923, provides wireless communication systems solutions for public safety, government, and commercial customers. The company designs, manufactures, and markets conventional and trunked radio systems, mobile and portable subscriber radios, repeaters, and Project 25 digital radio products. EFJohnson is a wholly owned subsidiary of EFJ, Incorporated.

Viking Head/EFJohnson logo, Call Guard®, PCConfigure™, and PCTune™ are trademarks of the EFJohnson Company. SMARTNET™ and SmartZone® are trademarks of Motorola, Inc. All other

company and/or product names used in this manual are trademarks and/or registered trademarks of their respective manufacturer. The IMBE™ voice coding technology embodied in this product is protected by intellectual property rights including patent rights of Digital Voice Systems, Inc.

Information in this manual is subject to change without notice.

TABLE OF CONTENTS

SECTION 1 GENERAL INFORMATION 6
1.1 SCOPE OF MANUAL 6
1.2 TRANSCEIVER DESCRIPTION 6
1.2.1 GENERAL 6
1.2.2 ANALOG/DIGITAL OPERATION 6
1.2.3 OPERATING PROTOCOLS 6
1.2.4 AVAILABLE MOUNTING OPTIONS 7
1.2.5 SYSTEMS, CHANNELS, AND ZONES 7
1.2.6 PROGRAMMING 8
1.2.7 ALIGNMENT 8
1.3 PRODUCT WARRANTY 8
1.4 MODEL NUMBER BREAKDOWN 8
1.5 SERIAL NUMBER BREAKDOWN 10
1.6 ACCESSORIES 10
1.7 FACTORY CUSTOMER SERVICE 12
1.8 RETURNS FOR REPAIRS 13
1.9 REPLACEMENT PARTS 14
1.10 INTERNET HOME PAGE 14
1.11 SECURE COMMUNICATION 14
1.11.1 GENERAL 14
1.11.2 FIPS 140-2 APPROVED ENCRYPTION 15
1.11.3 OVER-THE-AIR-REKEYING (OTAR) 15
1.11.4 KEY RETENTION 15
1.12 RF SAFETY INFORMATION 15
1.12.1 FEDERAL COMMUNICATIONS COMMISSION REGULATIONS 16
1.12.2 COMPLIANCE WITH RF EXPOSURE STANDARDS 16
1.12.3 EXPOSURE COMPLIANCE AND CONTROL GUIDELINES AND OPERATING INSTRUCTIONS 17
1.12.4 MOBILE ANTENNAS 17
1.12.5 APPROVED ACCESSORIES 18
1.12.6 CONTACT INFORMATION 18
4300 SERIES MOBILE SPECIFICATIONS 18
SECTION 2 INSTALLATION 20
2.1 IMPORTANT DIGITAL RADIO INSTALLATION INFORMATION 20
2.1.1 INTRODUCTION 20
2.1.2 INSTALLATION GUIDELINES 20
2.2 GENERAL INFORMATION 23
2.2.1 SCOPE OF INSTRUCTIONS 23
2.2.2 PERFORMANCE TESTS 23
2.2.3 TRANSCEIVER PROGRAMMING 23

2.2.4 POWER SOURCE 23
2.3 TRANSCEIVER INSTALLATION (FRONT AND REMOTE MOUNT) 23
2.3.1 MOUNTING CONFIGURATIONS 23
2.3.2 SELECTING A MOUNTING LOCATION 25
2.3.3 MOUNTING KITS 25
2.3.4 MOUNTING STANDARD POWER TRANSCEIVER 25
2.4 POWER CABLE INSTALLATION 26
2.4.1 STANDARD MODELS 26
2.5 ACCESSORY CABLE INSTALLATION 26
2.5.1 GENERAL 26
2.5.2 IGNITION SENSE INPUT (PIN 6) 27
2.5.3 SPEAKER PINS (PINS 1, 2, 3) 27
2.5.4 AUXILIARY B OUT (PIN 4) 27
2.5.5 EXTERNAL PUBLIC ADDRESS (PIN 7) 28
2.5.6 AUXILIARY B INPUT (PIN 8) 28
2.6 REMOTE CONTROL UNIT INSTALLATION 29
2.6.1 GENERAL 29
2.6.2 CONTROL UNIT BOARDS 29
2.6.3 SETTING MASTER/SLAVE SWITCHES 31
2.6.4 CONFIGURING VOLUME CONTROL 31
2.6.5 MOUNTING REMOTE CONTROL UNIT 31
2.7 CONNECTING THE SPEAKER 32
2.7.1 USING STANDARD INTERNAL SPEAKER 32
2.7.2 USING AN OPTIONAL EXTERNAL SPEAKER 32
2.9 TRANSCEIVER MOUNTING TRAY INSTALLATION 33
2.9.1 DESCRIPTION 33
2.9.2 INSTALLATION 33
2.10 HANDHELD CONTROL UNIT INSTALLATION 34
2.10.1 GENERAL 34
2.10.2 INSTALLATION INSTRUCTIONS 35
2.10.3 USING HHC TO PROVIDE DUAL CONTROLS OR DUAL REMOTES 36
2.10.4 TRANSCEIVER PROGRAMMING WITH HHC 37
2.11 SIREN OPTION INSTALLATION INSTRUCTIONS 37
2.11.1 GENERAL 37
2.11.2 TRANSCEIVER PROGRAMMING 37
2.11.3 INSTALLATION PROCEDURE 37
SECTION 3 OPERATION 40
3.1 GENERAL 40
SECTION 4 TRANSCEIVER PROGRAMMING 41
4.1 GENERAL 41
4.1.1 PROGRAMMING SETUP 41
4.1.2 COMPUTER DESCRIPTION 41
4.1.3 CONNECTING COMPUTER TO TRANSCEIVER 42
4.1.4 HANDHELD CONTROLLER PROGRAMMING SETUP 42
4.1.5 SIREN PROGRAMMING 43
4.2 USING THE PCCONFIGURE SOFTWARE 43

SECTION 5 CIRCUIT DESCRIPTION 44
5.1 GENERAL TRANSCEIVER DESCRIPTION 44
5.1.1 INTRODUCTION 44
5.1.2 PC BOARDS 44
5.1.3 CIRCUIT PROTECTION (FUSES) 45
5.1.4 ANALOG MODE 45
5.1.5 PROJECT 25 DIGITAL MODE 45
5.2 VHF BOARDS 46
5.2.1 VHF RF BOARD 46
5.2.1.1 RECEIVER 46
5.2.1.2 SYNTHESIZER 48
5.2.1.3 TRANSMITTER 49
5.2.2 VHF 20-WATT PA BOARD 50
5.2.2.1 VARIABLE ATTENUATOR 50
5.2.2.2 PA RF DEVICE (Q6) 51
5.2.2.3 FORWARD POWER DETECTOR, ANTENNA SWITCH, LOW-PASS FILTER 51
5.2.2.4 POWER CONTROL 51
SECTION 6 ALIGNMENT PROCEDURE 54
6.1 GENERAL 54
6.1.1 INTRODUCTION 54
6.1.2 TUNE SOFTWARE 54
6.1.3 PCTUNE VERSION REQUIRED 55
6.2 MAIN SCREEN 55
6.3 MENU BAR DESCRIPTION 57
6.3.1 FILE MENU 57
6.3.2 RADIO MENU 57
6.3.3 TRANSFER MENU 57
6.3.4 TOOLS MENU 58
6.3.5 HELP MENU 59
6.4 TUNING PROCEDURE 59
6.4.1 CONNECTING TEST SETUP 59
6.4.2 STARTING AND CONFIGURING PCTUNE 60
6.5 DIGITAL PERFORMANCE TESTS 60
6.5.1 GENERAL 60
6.5.2 RECEIVE TEST SETUP 61
6.5.3 RECEIVE SENSITIVITY TEST 61
6.5.4 TRANSMITTER TESTS 61
6.6 ANALOG PERFORMANCE TESTS 62
6.6.1 GENERAL 62
6.6.2 RECEIVER PERFORMANCE TESTS 62
6.6.3 TRANSMITTER PERFORMANCE TESTS 63
SECTION 7 PARTS LIST 65
SECTION 8 SCHEMATIC DIAGRAMS AND COMPONENT LAYOUTS 102

SECTION 1 GENERAL INFORMATION

1.1 SCOPE OF MANUAL

This service manual contains operation, programming, alignment, and service information for the E.F. Johnson Company 4300 series VHF mobile radio.

1.2 TRANSCEIVER DESCRIPTION

1.2.1 GENERAL

The 4300 series mobile transceivers operate on various types of channels and with various signaling protocols (see following information).
VHF: 136-174 MHz, 20 watts

1.2.2 ANALOG/DIGITAL OPERATION

The 4300 transceivers use a digital signal processor (DSP) to provide IF and audio filtering and signal modulation functions. This allows operation on the following types of channels, backwards compatibility with existing equipment, and also the ability to operate on various types of radio systems.

Narrow Band Analog - FM modulation is used with a maximum deviation of 2.5 kHz. This mode is usually used in systems with a channel spacing of 12.5 or 15 kHz.

Wideband Analog - FM modulation is used with a maximum deviation of 5 kHz. This mode is usually used in systems where the channel spacing is 25 kHz or 30 kHz.

Project 25 Digital - Operates on Project 25 compatible systems. The voice is digitized, error corrected, optionally encrypted, and then transmitted using C4FM modulation according to the Project 25 standard. This mode uses a channel spacing of 12.5 kHz.

1.2.3 OPERATING PROTOCOLS

The 43xx transceivers can be programmed for all the following operating protocols. The conventional analog protocol is standard and the others are optional (available only if enabled by factory programming). Refer to Section 3 for more operation information.

- Conventional analog
- Conventional Project 25 (digital)
- Trunked Project 25 (digital)
- Trunked SMARTNET®/SmartZone® analog or digital

1.2.4 AVAILABLE MOUNTING OPTIONS

Front Mount - The operating controls are on the front on the radio, so the radio must be mounted within reach of the user.

Remote Mount, Single Control Unit - The operating controls are located on a remote mounted control unit. The radio does not have operating controls.

Remote Mount, Dual Controls - A remote control unit is connected to the front mount radio. This allows control from the front panel and the remote control unit.

Remote Mount, Dual Remote Control Units - Two remote control units are connected to the remote mount radio. This allows control from both remote control units.

1.2.5 SYSTEMS, CHANNELS, AND ZONES

A zone and channel are selected to place and receive calls. The following describes the relationship between systems, channels, and zones.

Systems

A system is a collection of channels or talk groups belonging to the same repeater site. It defines all the parameters and protocol information required to access a site. Up to 16 systems of any type can be programmed. The maximum number of channels assignable to a system is limited to approximately 256 (or the available memory space as described in the following information).

Channels

A channel selects a radio channel or talk group in a system as follows:

Conventional Analog Mode - A channel selects a specific radio channel, Call Guard [Continuous Tone Coded Squelch System (CTCSS)/Digital Coded Squelch (DCS)] squelch coding, and other parameters unique to that channel.

Conventional Project 25 Mode - A channel selects a specific radio channel, NAC squelch coding, talk group ID, and other parameters unique to that channel.

Trunked Project 25 Mode - A channel selects a specific talk group ID and other parameters unique to that talk group.

SMARTNET/SmartZone and Project 25 Trunked Operation - A channel selects a specific talk group, announcement group, emergency group, and other parameters unique to that talk group.

As previously described, a maximum of up to 256 channels can be programmed. Although it is theoretically possible to program any combination of systems that produces up to 256 total channels, the maximum number may be limited by the available memory. For example, since more memory is required to program a SMARTNET system than a conventional system, the total number of channels decreases as the number of SMARTNET systems increases. The

programming software displays a bar graph which shows the amount of available memory space that is used by the current data. Refer to Section 4 for more information.

Zones

A zone is a collection of up to 16 channels of any type. For example, a zone could include 12 conventional channels and 4 SMARTNET channels. One use of zones may be to program the channels used for operation in a specific geographical area. Up to 16 zones can be programmed.

1.2.6 PROGRAMMING

Transceiver programming is performed using a PC-compatible computer and an EFJohnson Remote Programming Interface (RPI) and PC Configure programming software (see Table 1-1). Programming is described in a separate included manual. Refer to Section 4 for more information.

1.2.7 ALIGNMENT

Transceiver alignment is performed using the same computer and RPI used for programming (see preceding section) and special PCTune™ software. All adjustments are made electronically using the software (no manual adjustments are required). Alignment is described in Section 6.

1.3 PRODUCT WARRANTY

The warranty statement for this transceiver is available from your product supplier or from the Warranty Department, E.F. Johnson Company, 1440 Corporate Drive, Irving, TX 75038-2401. This information may also be requested from the Warranty Department by phone as described in Section 1.7. The Warranty Department may also be contacted for Warranty Service Reports, claim forms, or any other questions concerning warranties or warranty service.

1.4 MODEL NUMBER BREAKDOWN

The radio model number is located on the radio identification label attached to the bottom cover (see Figure 1-1). The following is a breakdown of this number:

[Insert label graphic here]
Figure 1-1 Identification Label Example

242-5MFT-SEC-OADE

M (Model)
3 - 4300 Series

F (Frequency Band)
1 - VHF (136-174 MHz)

T (Type of Installation)
7 - Standard Power, Dash Mount
8 - Standard Power, Remote Mount
9 - Standard Power, Dash Mount Public Works

S (Signaling Protocol, Primary)
2 – Project 25 Conventional Analog/Digital
4 - Special
8 - Analog Mode Only

E (Encryption Type)
0 - No encryption
5 - DES/DES-OFB (SEM or UCM*)
6 - DES/DES-XL/DES-OFB (UCM only*)
7 - DES/DES-OFB/AES (SEM or UCM*)
8 - DES/DES-XL/DES-OFB/AES (UCM only*)

C (Control Unit Configuration)
1 - Six button standard control unit
4 - Dual Controls (Front + Remote)
5 - Handheld Control Unit (HHC)
6 - Dual Remote (Two Remote Control Units)
7 - Transit Bus System

O (Optional Cables – Factory Installed)
A - No installed options
D - Data/Accessory cable (optional cable 597-2002-282, with female DB 9 connector, required for data option)
S - Siren cable (optional cable 597-2002-231 required for external siren option)
U - UI cable
R - Remote/Accessory cable (optional cable 597-2002-249 for external control of radio from DB 15 female connector – included standard with remote control unit version of radio.)

A (Additional Signaling)
A - No additional signaling
B - Project 25 and SMARTNET/SmartZone Trunking
C - SMARTNET Trunking
E - SMARTNET/SmartZone Trunking

D (Data Options)
A - No data
B – Project 25 Conventional Mobile Data

E (Encryption and Security Software Options)

B - Default [no Over-The-Air-Rekeying (OTAR)]
C - OTAR Project 25 Conventional
D - OTAR Project 25 Trunked/Conventional *

1.5 SERIAL NUMBER BREAKDOWN

The radio serial number is located on the radio identification label attached to the bottom cover (see Figure 1-1). The following is a breakdown of this number:

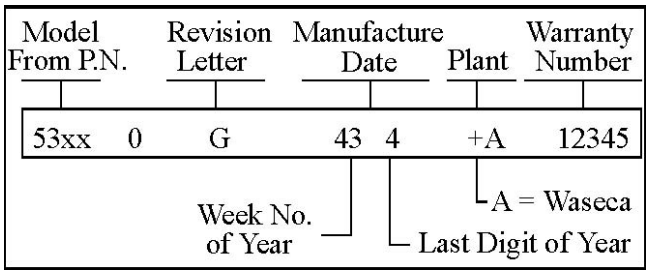

1.6 ACCESSORIES

The accessories available for this transceiver are listed in Table 1-1. A brief description of some of these accessories follows:

Table 1-1 4300 Accessories

Accessory Part No.	
Mounting Accessories	
Mounting bracket & hardware kit (standard)	
DC power cable & hardware, 22 ft. (standard)	
Accessory wire kit	
Lockable Mounting Tray	
Microphones	
Standard amplified dynamic	250-0740-310
DTMF without mem, commercial	589-0016-028
DTMF without mem, env seal WR805	587-9650-015
Noise canceling, weather resistant	589-0016-592
Desk microphone	589-0012-021
Speakers	
External, 5-inch, 15-Watt 3.2 Ω environmental sealed with plug for HHC	250-0151-005
External, 5-inch, 15-Watt 3.2 Ω	250-0151-006

environmental sealed with terminals for acc cable	
Handheld Control Unit and Siren Controller	
Handheld control unit with junction box and 17 ft control cable	250-5300-101
Siren controller kit (without loudspeaker)	250-5300-100
Siren loudspeaker, model TS100 for light bar installation	585-5300-007
Siren loudspeaker, model MS100 compact for behind-grill installation	585-5300-009
Remote Control Conversion Kit	
Dual control kit (convert front mount to remote or dual controls)	
Control station power supplies	
15 amp, 117 VAC, 60 Hz (light duty)	585-4001-202
15 amp, 230 VAC, 50 Hz (light duty)	585-4001-204
15 amp, 117 VAC (heavy duty)	239-0226-111
15 amp, 230 VAC (heavy duty)	239-0226-211
Programming Accessories	
PCConfigure programming software, CD	023-9998-488
PCTune software, CD (current logic boards)	023-9998-499
Programming Kit, includes -488 software, -005 cable, CD programming manual	250-5000-004
Encryption Keyloader and Accessories	
SMA (PDA) keyloader	250-5000-945
SMA keyloader to 4100 radio cable	023-TBD
SMA keyloader to 4300 radio cable	023-TBD
Data Cable	
Data pigtail cable, female DB9	597-2002-282

Mounting Hardware - The mounting hardware and DC power cable for standard models are shown in Figure 2-1. A 22-foot (6-meter) DC power cable is used for both front and remote mount applications. The cable is cut to the required length at installation and any excess discarded.

The accessory cable plugs into the accessory pigtail of the transceiver, and is used to connect such things as an external speaker, ignition sense input, and a horn alert. It includes two 22-foot (6-meter) and three 2-foot (0.6-meter) wires that are connected as required to external points. The adapter cable is used to connect a 86xx-series power cable to these transceivers.

Lockable Mounting Tray - This bracket allows the transceiver to be locked in place to guard against theft. In addition, it allows it to be easily unlocked and removed from the vehicle. Refer to Section 2.9 for installation information.

Microphones and Speaker - The microphones in Table 1-1 have an impedance of 620 Ω. All DTMF microphones are backlighted. The environmentally sealed microphone is sealed against such things as rain, sand, and dust. The desk microphone can be used for control station applications.

The external 15-Watt speaker can be used in place of the internal 5-Watt speaker. It is non-amplified and weatherproof. This speaker is connected to Pins 1 and 2 of the accessory connector pigtail on the back of the transceiver. Audio power output is 12 Watts with this external speaker or 5 Watts with the internal speaker.

Control Station Power Supply -With the -4001- medium-duty power supplies, the transceiver slides into the power supply housing and receives power from banana jacks on the back of the power supply. The standard power cable is used for connecting power, and the internal transceiver speaker provides speaker audio.

With the -0226 heavy duty power supplies, the transceiver mounts on a pedestal. The -004 adapter cable is used to connect the transceiver DC and accessory pigtail cables to the power supply power cable and speaker. The transceiver internal speaker can also be used if desired.

Programming Hardware and Software - The RPI provides the interface between the programming computer and transceiver. The cables from the RPI to computer and transceiver are not included with the RPI and must be ordered separately. The transceiver programming software is available only for computers running Windows® 95/98/NT/2000/XP.

Encryption Options –Contact Customer Service for more information on the availability of encryption modules.

A key loader and an adapter cable are required to load encryption keys. The EFJohnson Subscriber Management Assistant (SMA) key loader part number is listed in Table 1-1. With OTAR, the key loader is required to perform the initial load of keys. After that, the keys are loaded over the air. The adapter cable connects the key loader to the transceiver microphone jack. Special programming using PCConfigure is also required as described in Section 4.

1.7 FACTORY CUSTOMER SERVICE

The Customer Service Department of the E.F. Johnson Company provides customer assistance on technical problems and the availability of local and factory repair facilities. Regular Customer Service hours are 8:00 a.m. - 5:00 p.m. Central Time, Monday-Friday. A technical support subscription service is available or support can be purchased on an as-needed basis. The Customer Service Department can be reached using the following telephone numbers:

Toll-Free: (800) 328-3911 (for all products except Multi-Net)

Multi-Net Only: Toll-Free (800) 295-1773

Fax: (972) 818-0639

E-Mail: customerservice@efjohnson.com You can also e-mail a person directly if you know their first initial/last name (example: jsmith@efjohnson.com).

NOTE: Emergency 24-hour technical support is also available at the 800 and preceding numbers during off hours, holidays, and weekends.

When your call is answered at the E.F. Johnson Company, you will hear a brief message informing you of numbers that can be entered to reach various departments. This number may be entered during or after the message using a tone-type telephone. If you have a pulse-type telephone, wait until the message is finished and an operator will come on the line to assist you. When you enter some numbers, another number is requested to further categorize the type of information you need.

You may also contact the Customer Service Department by mail. Please include all information that may be helpful in solving your problem. The mailing address is as follows:

E.F. Johnson Company
Customer Service Department
1440 Corporate Drive
Irving, TX 75038-2401

1.8 RETURNS FOR REPAIRS

Before you return equipment for repair, contact Customer Service as described in the preceding section. They may be able to suggest a solution to the problem that will make return of the equipment unnecessary.

Repair service is normally available through local authorized E.F. Johnson Land Mobile Radio Service Centers. If local service is not available, the equipment can be returned to the E.F. Johnson repair depot for repair. However, before returning equipment, contact the Customer Service Department Repair Depot for the correct "Ship To" address.

Be sure to fill out a Factory Repair Request Form #271 for each unit to be repaired, whether it is in or out of warranty. These forms are available free of charge by calling Customer Service (see Section 1.7) or by requesting them when you send a unit in for repair. Clearly describe the difficulty experienced in the space provided and also note any prior physical damage to the equipment. Include this form in the shipping container with each unit. Your telephone number and contact name are important as there are times when the technicians may have specific questions that need to be answered in order to completely identify and repair a problem.

When returning equipment for repair, it is also recommended that you use a PO number or some other reference number on your paperwork in case you need to call the repair lab about your unit. These numbers are referenced on the repair order and make it easier and faster to locate your unit in the lab.

Return Authorization (RA) numbers are not necessary unless you have been given one by the Field Service Department. RA numbers are required for exchange units or if the Field Service Department wants to be aware of a specific problem. If you have been given an RA number, reference this number on the Factory Repair Request Form sent with the unit. The repair lab will then contact the Field Service Department when the unit arrives.

For additional information on factory service, the Depot Service Department can be contacted at the following E-mail address:

depotrepair@efjohnson.com

1.9 REPLACEMENT PARTS

Replacement parts can be ordered directly from the Service Parts Department. To order parts by phone, dial the toll-free number as described in Section 1.7. When ordering, please supply the part number and quantity of each part ordered. E.F. Johnson dealers also need to give their account numbers. If there is uncertainty about the part number, include the designator (C512, for example) and the model number of the equipment the part is from.

You may also send your order by mail or FAX. The mailing address is as follows and the FAX number is shown in Section 1.7.

E.F. Johnson Company
Service Parts Department
1440 Corporate Drive
Irving, TX 75038-2401

1.10 INTERNET HOME PAGE

The E.F. Johnson Company has a site on the World Wide Web that can be accessed for information on the company about such things as products, systems, and regulations. The address is http://www.efjohnson.com.

1.11 SECURE COMMUNICATION

1.11.1 GENERAL

SecureNet™ and Advanced Encryption Standard (AES) voice encryption are used to provide secure communication with this transceiver. These protocols digitize the voice and then encrypt it using an AES or Data Encryption Standard (DES) algorithm. The following types of encryption are available on analog and digital channels:

Analog Conventional and SMARTNET/SmartZone Analog Channel

- DES

Digital Project 25 and SMARTNET/SmartZone Channels

- DES-OFB (Output Feedback)
- AES

1.11.2 FIPS 140-2 APPROVED ENCRYPTION

All encrypted 4300 models are Federal Information Processing Standard (FIPS) certified for the DES-OFB and AES encryption modes. Encryption on analog channels is not FIPS certified. FIPS 140-02 is approved by the United States Secretary of Commerce. This standard specifies federal security requirements for cryptographic modules for a wide range of applications and environments.

1.11.3 OVER-THE-AIR-REKEYING (OTAR)

Encryption keys are loaded into the radio by Over-The-Air-Rekeying (OTAR) using a KMF (Key Management Facility) and/or a handheld keyloader such as the EFJohnson SMA (Subscriber Management Assistant) or Motorola KVL 3000 Plus with the AES option.

The keyloader is connected directly to the radio using an interconnect cable, and it loads DES, DES-OFB, and AES keys. OTAR can be used to load DES-OFB keys on Project 25 conventional channels

1.11.4 KEY RETENTION

NOTE: The 4300 radio has a security feature (pushbutton switch S1 on the logic board) that automatically erases the encryption keys when the bottom cover is removed (except when Infinite Key Retention is programmed as follows).

If Infinite Key Retention is programmed, the keys are maintained in memory indefinitely, even without power applied. If it is not programmed, the transceiver must be connected to an unswitched power source to preserve the encryption keys in memory. However, a storage capacitor (C173) maintains the 5-volt supply (and the encryption keys) for approximately 8 hours if power is temporarily lost.

1.12 RF SAFETY INFORMATION

Before using your mobile two-way radio, read this important RF energy awareness and control information and operational instructions to ensure compliance with the FCC's RF exposure guidelines.

NOTICE: This radio is intended for use in occupational/controlled conditions, where users have full knowledge of their exposure and can exercise control over their exposure to meet FCC limits. This radio device is NOT authorized for general population, consumer, or any other use.

This two-way radio uses electromagnetic energy in the radio frequency (RF) spectrum to provide communications between two or more users over a distance. It uses radio frequency (RF)

energy or radio waves to send and receive calls. RF energy is one form of electromagnetic energy. Other forms include, but are not limited to, electric power, sunlight and x-rays. RF energy, however, should not be confused with these other forms of electromagnetic energy, which when used improperly can cause biological damage. Very high levels of x-rays, for example, can damage tissues and genetic material.

Experts in science, engineering, medicine, health and industry work with organizations to develop standards for exposure to RF energy. These standards provide recommended levels of RF exposure for both workers and the general public. These recommended RF exposure levels include substantial margins of protection. All two-way radios marketed in North America are designed, manufactured and tested to ensure they meet government established RF exposure levels. In addition, manufacturers also recommend specific operating instructions to users of two-way radios. These instructions are important because they inform users about RF energy exposure and provide simple procedures on how to control it. Please refer to the following web sites for more information on what RF energy exposure is and how to control your exposure to assure compliance with established RF exposure limits.

http://www.fcc.gov/oet/rfsafety/rf-faqs.html
http://www.osha.gov/SLTC/radiofrequencyradiation/index.html

1.12.1 FEDERAL COMMUNICATIONS COMMISSION REGULATIONS

The FCC rules require manufacturers to comply with the FCC RF energy exposure limits for mobile two-way radios before they can be marketed in the U.S. When two-way radios are used as a consequence of employment, the FCC requires users to be fully aware of and able to control their exposure to meet occupational requirements. Exposure awareness can be facilitated by the use of a label directing users to specific user awareness information. Your EFJohnson two-way radio has a RF exposure product label. Also, your EFJohnson user manual, or product manual, or separate safety booklet includes information and operating instructions required to control your RF exposure and to satisfy compliance requirements.

1.12.2 COMPLIANCE WITH RF EXPOSURE STANDARDS

Your EFJohnson two-way radio is designed and tested to comply with a number of national and international standards and guidelines (listed below) regarding human exposure to radio frequency electromagnetic energy. This radio complies with the IEEE and ICNIRP exposure limits for occupational/controlled RF exposure environment at duty factors of up to 50% talk and 100% listen and is authorized by the FCC for occupational use**.** In terms of measuring RF energy for compliance with the FCC exposure guidelines, your radio antenna radiates measurable RF energy only while it is transmitting (during talking), not when it is receiving (listening) or in standby mode**.**

Your EFJohnson two-way radio complies with the following RF energy exposure standards and guidelines:

- United States Federal Communications Commission, Code of Federal Regulations; 47 CFR §§ 2 sub-part J.

- American National Standards Institute (ANSI) / Institute of Electrical and Electronic Engineers (IEEE) C95. 1-1992.

- Institute of Electrical and Electronic Engineers (IEEE) C95.1-1999 Edition.

1.12.3 EXPOSURE COMPLIANCE AND CONTROL GUIDELINES AND OPERATING INSTRUCTIONS

To control exposure to yourself and others and ensure compliance with the occupational/controlled environment exposure limits always adhere to the following procedures.

Guidelines:

- User awareness instructions should accompany device when transferred to other users.
- Do not use this device if the operational requirements described herein are not met.

Instructions:

- Transmit no more than the rated duty factor of 50% of the time. To transmit (talk), push the Push-To-Talk (PTT) button. To receive calls, release the PTT button. Transmitting 50% of the time, or less, is important because this radio generates measurable RF energy exposure only when transmitting (in terms of measuring for standards compliance).
- Transmit only when people outside the vehicle are at least the recommended minimum lateral distance away, as shown in Table 1, from a properly installed according to installation instructions, externally-mounted antenna.

NOTE*: Table 1-2 lists the recommended minimum lateral distance for bystanders in an uncontrolled environment from transmitting types of antennas (i.e., monopoles over a ground plane, or dipoles) at several different ranges of rated radio power for mobile radios installed in a vehicle.*

Table 1-2 Rated Power and Recommended Lateral Distance

Rated Power of Vehicle-Installed Two-Way Radio	Recommended Minimum Lateral Distance From Transmitting Antenna
Up to 50 watts	40 inches (1.0 meter)

1.12.4 MOBILE ANTENNAS

- Install antennas at the center of the roof or the center of the trunk deck taking into account the bystander exposure conditions of backseat passengers and the recommended minimum lateral distances in Table 1-2. These mobile antenna installation guidelines are limited to metal body motor vehicles or vehicles with appropriate ground planes. The antenna installation should additionally be in accordance with:
  a.) The requirements of the antenna manufacturer/supplier.
  b.) Instructions in the Radio Installation Manual, including minimum antenna cable lengths.

c.) The installation manual should provide specific information of how to install the antennas to facilitate recommended operating distances to all potentially exposed persons.

- Use only EFJohnson approved supplied antenna or EFJohnson approved replacement antenna. Unauthorized antennas, modifications, or attachments could damage the radio and may violate FCC regulations. Antennas tested with EFJohnson radios are listed in Table 1-2.

Table 1-2 Tested Antenna Whips and Bases (Antenna Manufacturer - Antenna Specialists)

Frequency	Whip Model No.	Base Model No.
136-144 MHz	ASPJ1415	KM220
144-152 MHz	ASPA1415	KM220
152-162 MHz	ASPB1415	KM220
162-174 MHz	ASPC1415	KM220
400-430 MHz	ASPE1615	KM220
430-470 MHz	ASPD1615	KM220
470-512 MHz	ASPF1615	KM220
806-869 MHz	ASPA1855	KM220
890-960 MHz	ASPG1865	KM220

1.12.5 APPROVED ACCESSORIES

- This radio has been tested and meets the FCC RF exposure guidelines when used with the EFJohnson accessories supplied or designated for this product. Use of other accessories may not ensure compliance with the FCC's RF exposure guidelines, and may violate FCC regulations.
- For a list of EFJohnson approved accessories, refer to the radio service manual or contact the EFJohnson Company as follows.

1.12.6 CONTACT INFORMATION

For additional information on exposure requirements or other information, contact the EFJohnson Company at the address or telephone number listed in Section 1.7.

4300 SERIES MOBILE SPECIFICATIONS

The following are general specifications intended for use in testing and servicing this transceiver. For current advertised specifications, refer to the specification sheet available from your sales representative. Values are typical and are subject to change without notice.

GENERAL

Frequency Range	VHF:	136-174 MHz
Operating Modes	Conventional, Project 25 Conventional, Project 25 Trunked, SMARTNET, SmartZone	

Mounting Location	Dash Mount (Remote mount optional)
Zones/Channels	Up to 16 zones with 16 channels per zone
Transmit/Receive Separation	Any frequency within the range
Channel Spacing	12.5, 15, 25, and 30 kHz
Maximum Deviation	25 kHz analog - 5 kHz 12.5 kHz analog - 2.5 kHz
Frequency Stability Receive and Transmit	2.5 PPM [–22° to +140° F (–30° to +60° C)]
Dimensions (without antenna)	2.1 inches high x 7.2 inches wide x 8.3 inches deep (5.3 cm x 18.2 cm x 21.1 cm)
Weight (with standard battery)	5 lbs. 4 oz. (2.38 kg)
Supply Voltage	13.6 volts DC nominal, negative ground
Current Drain (maximum)	Standby - 600 mA Receive (rated audio out) - 2.7 A Rated Transmit Power - 13.2 A

RECEIVER

Sensitivity	0.35 µV (analog mode 12 dB SINAD), 0.35 µV (digital mode 5% BER)
Selectivity	–75 dB
Spurious and Image Rejection	–75 dB
Intermodulation	–75 dB
Hum and Noise	40 dB at 25 kHz, 34 dB at 12.5 kHz
Maximum Frequency Spread	Any spread within the range
Audio Power Output	5 W with internal speaker (12 W with external 4-Ω speaker)
Audio Distortion	Less than 3% at 1 kHz

TRANSMITTER

RF Power Output	10 - 50 W variable standard
Spurious and Harmonic Emissions	–70 dB
FM Hum and Noise	–45 dB at 25 kHz bandwidth
Audio Modulation	8K10F1E, 11K0F3E, 16K0F3E, 20K0F1E
Audio Distortion	Less than 3% at 1 kHz
Maximum Frequency Spread	Any spread within the band

SECTION 2 INSTALLATION

2.1 IMPORTANT DIGITAL RADIO INSTALLATION INFORMATION

2.1.1 INTRODUCTION

With digital radios such as the 4300, electrical noise on the DC power line is heard as a "warbling" sound in messages received from a radio in a vehicle with this problem. It is not the typical alternator whine or ignition ticking heard with analog radios.

NOTE: For proper digital radio operation, the noise level at the battery and power connector of the radio should be 50 mV or less when measured by an oscilloscope.

2.1.2 INSTALLATION GUIDELINES

Much of this electrical noise is caused by improper radio installation techniques. Observing the installation guidelines which follow minimizes the degradation of radio performance caused by vehicle electrical noise. If noise is still a problem after following these guidelines, try installing a noise filter such as EFJohnson 17-Ampere In-Line Noise Filter, Part No. 517-2003-017.

- Connect both wires of the power cable directly to the vehicle battery as shown in the photo on the following page. Use a minimum length of cable.

- Do not connect the power cable to a switched power source such as a kill switch because de-affiliation and proper saving of some parameters then does not occur at power off. Use the ignition sense line to switch power as described in "ACCESSORY CABLE INSTALLATION" on page ???. Current drain in the off mode with this configuration is only about 0.75 mA.

- Do not route the power cable and coaxial cable in the same bundle except when required such as to get through a firewall. Keep this type of routing short and close to the radio. Do not coil up extra power cable and attach it to other wires or coaxial cable. Use only the minimum length of cable required.

- Mount the antenna on the roof or center of the trunk lid and at least 5 feet (1.5 meters) from other antennas. Do not mount it on a light bar, next to a video camera, or on a small "L" bracket on the fender lip.

- Do not use adapters to connect the antenna to the Type N antenna jack of the radio. Change the antenna connector to the correct type if required.

CORRECT →

Splices should be made by wrapping the wires together and then soldering the connection. Insulate the splice with electrical tape or heat shrink tubing.

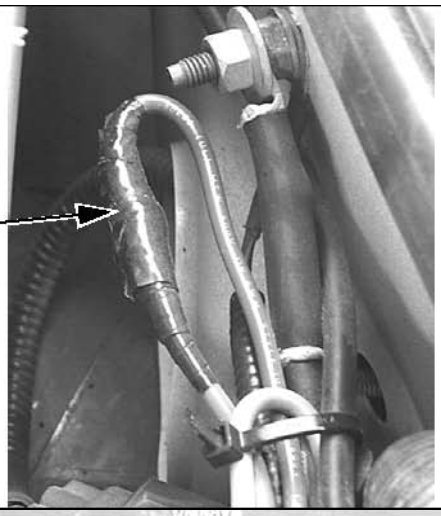

CORRECT →

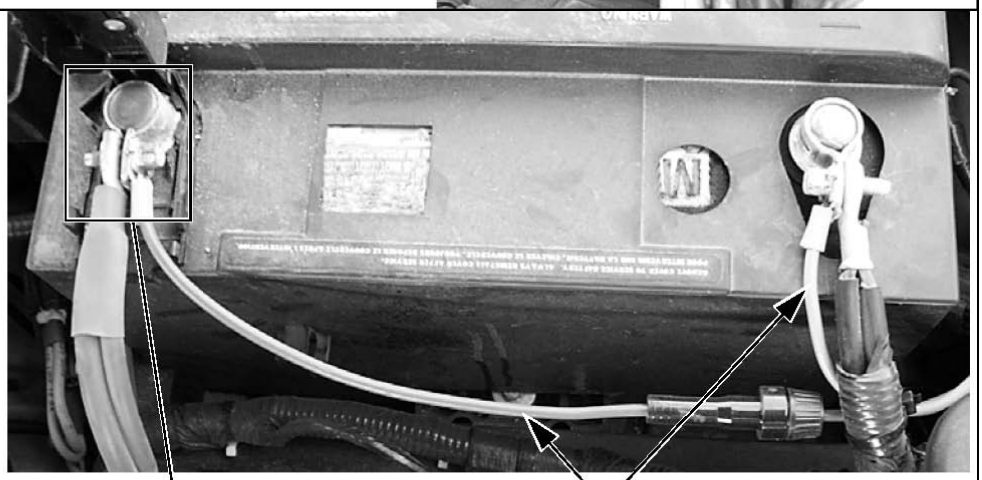

Radio Power Cable

Solder ring terminal to wire and attach it directly to battery clamp bolt

INCORRECT →

DO NOT use butt splice connectors like these!

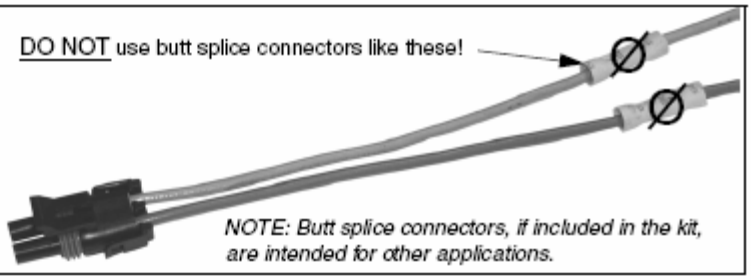

NOTE: Butt splice connectors, if included in the kit, are intended for other applications.

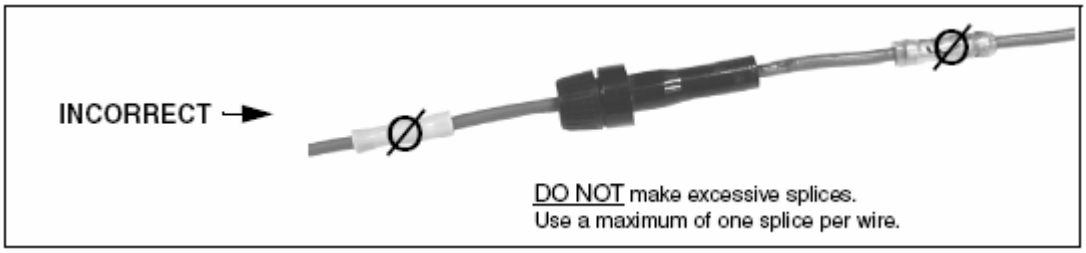

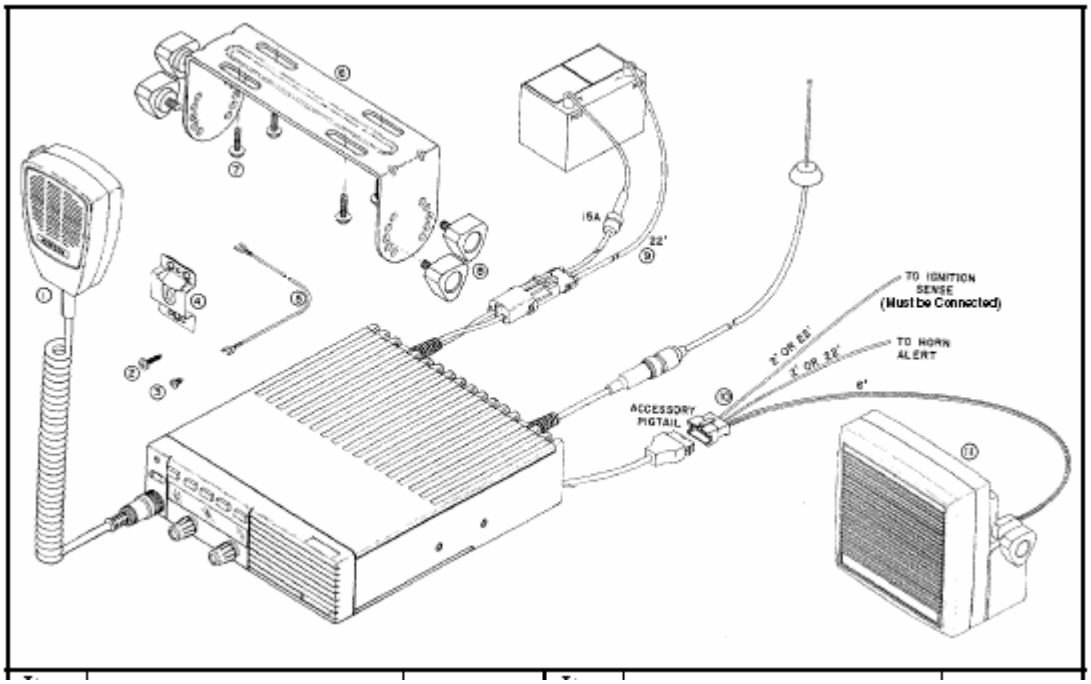

Item No.	Description	Part No.	Item No.	Description	Part No.
1	Amplified dynamic mic	250-0740-310	7	Self-drilling screw (4)	575-9077-565
2	Screw, 4-20 x 5/8” thread frmg (3)	575-5604-020	8	Knob (4)	547-0016-003
3	Screw, 4-24 x 1/4” sheet metal (3)	575-3604-008	9	Power cable (22') and hardware	023-9750-010
4	Microphone hanger clip	023-3514-001	10	Accessory wire and hardware	023-9750-011
5	Mic hanger ground wire	023-7171-911	11	5" remote speaker	250-0151-006
6	Transceiver mounting bracket	017-2226-034			

Figure 2-1 Front Mount Installation Components

2.2 GENERAL INFORMATION

2.2.1 SCOPE OF INSTRUCTIONS

Since each installation is somewhat unique, the following installation instructions are intended only as a general guide to installing this transceiver. Described are the intended use of the mounting hardware and the electrical connections that should be made.

2.2.2 PERFORMANCE TESTS

Although each transceiver is carefully aligned and tested at the factory, shipment can alter these settings or damage the transceiver. Therefore, it is good practice to check transceiver performance before it is placed in service.

2.2.3 TRANSCEIVER PROGRAMMING

The transceiver needs to be programmed before it is placed in service unless it was ordered as factory programmed. Programming instructions are located in Section 4. Transceivers not factory programmed are shipped programmed with test channels and other factory test parameters.

2.2.4 POWER SOURCE

NOTE: The ignition sense line must be connected as described in Section 2.5.2 for power up to occur.

This transceiver is designed for installation only in vehicles which have a 12-volt, negative ground electrical system. This type of electrical system has the negative battery terminal connected directly to the vehicle chassis. Other types of electrical systems require a voltage converter, and external functions such as ignition sense and horn alert may require a special interface.

2.3 TRANSCEIVER INSTALLATION (FRONT AND REMOTE MOUNT)

2.3.1 MOUNTING CONFIGURATIONS

Models of this transceiver are available for the following installation configurations:

Front Mount - The control unit is part of the transceiver, so the transceiver must be installed within reach of the operator.

Remote Mount - The control unit is a separate assembly which can be installed up to 17 feet (5 meters) from the transceiver which has a blank front panel (see Figure 2-2).

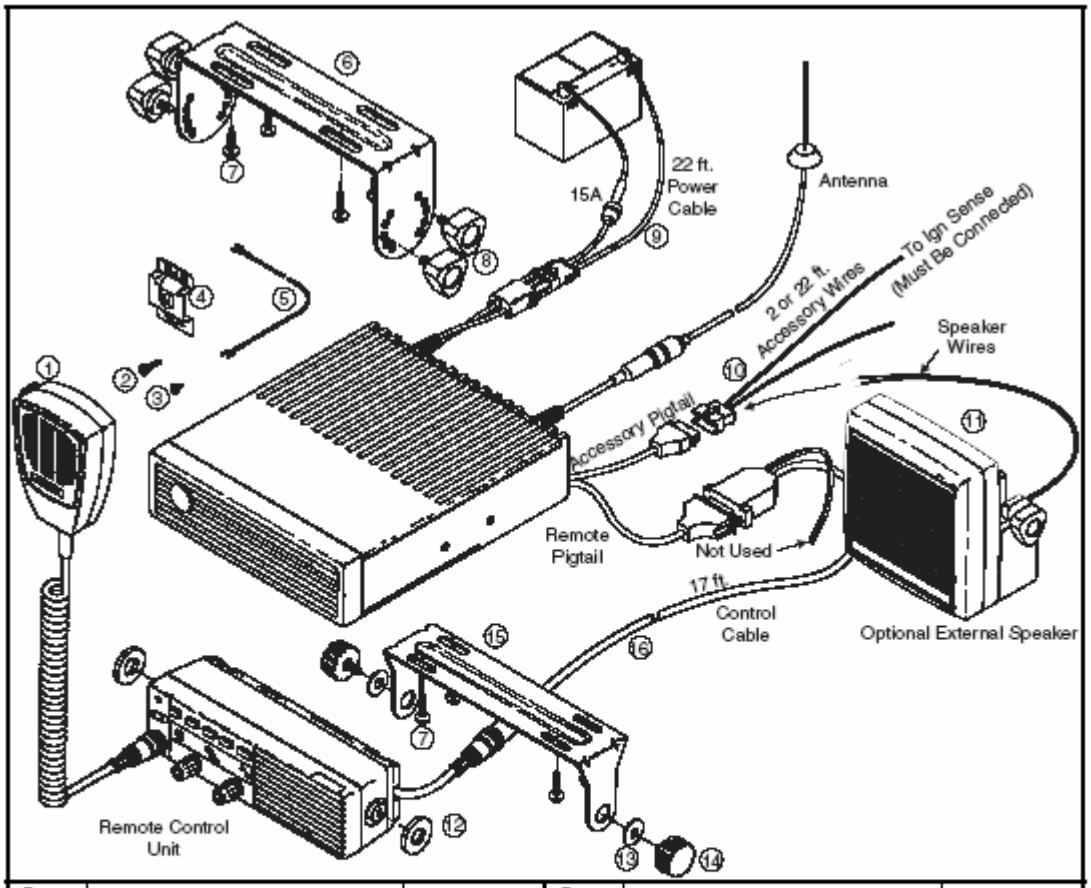

Item No.	Description	Part No.	Item No.	Description	Part No.
1	Amplified dynamic microphone	250-0740-310	8	Knob, transceiver (4)	547-0016-003
2	Screw, 4-20 x 5/8" thread forming (3)	575-5604-020	9	Power cable (22 ft.) and hardware	023-9750-010
3	Screw, 4-24 x 1/4" sheet metal (3)	575-3604-008	10	Accessory wire and hardware	023-9750-011
4	Microphone hanger clip	023-3514-001	11	5" 15W 3.2-ohm external speaker	250-0151-006
5	Mic hanger ground wire	023-7171-911	12	Plastic washer (2)	596-6400-015
6	Transceiver mounting bracket	017-2226-050	13	Stainless steel spring washer (2)	596-9260-001
7	Self drilling screw, 1.25" long		14	Knob, control unit (2)	032-0792-015
	Transceiver 1/4"	575-9077-565	15	Control unit mounting bracket	017-2226-050
	Control unit #10	575-9077-545	16	Control cable, 17 ft.	597-2002-262

Figure 2-2 Standard Remote Mount Installation Components

Dual Control - The remote control unit is connected to a front-mount transceiver. This allows the transceiver to be controlled from both the transceiver front panel and the remote control unit. The displays on the transceiver and control unit indicate identical information.

Dual Remote - Two remote control units are connected to a remote mount transceiver. This allows the transceiver to be mounted remotely from both control units. The displays on the control units indicate identical information.

2.3.2 SELECTING A MOUNTING LOCATION

Front-mount transceivers are designed for mounting in a location near the operator such as the dash, console, or transmission hump. Remote-mount transceivers are designed for mounting in an out-of-the-way location such as the trunk.

WARNING

The mounting location of the transceiver or control unit can affect safe operation of the vehicle. Follow these precautions when installing this transceiver:

- Mount it where it does not interfere with operation of the vehicle controls and where the operator can easily see the display and reach the controls.
- Mount it where it is least likely to cause additional injury in case of an accident.
- Air bags deploy with great force. Therefore, do not mount a transceiver or control unit anywhere near the deployment area or place any other objects in the deployment area.

2.3.3 MOUNTING KITS

The following kits may be used to install this transceiver. Components in these kits are shown in Figures 2-1, 2-2, and 2-5.

Cable and Hardware Kit, Part No. 023-9750-010 Includes a 22-foot (6.7-meter) power cable, microphone hanger and ground wire, splice connectors, and all the hardware (such as screws) that is normally required for installation.

Transceiver Mounting Kit, Part No. 023-9750-012 Includes a transceiver mounting bracket, four knobs, and mounting screws.

Accessory Wire Kit, Part No. 023-9750-011 Includes a wire assembly that is used to connect the ignition sense input and accessories.

2.3.4 MOUNTING STANDARD POWER TRANSCEIVER

Proceed as follows to mount a standard power front or remote mount transceiver:

1. Check the area underneath the selected mounting area for wiring, brake and gas lines, or other components that could be damaged when the mounting bracket is installed. Then install the mounting bracket using the included self-drilling screws or other screws if desired.
2. Install the transceiver in the bracket using the included knobs.
3. With front-mount transceivers, install the microphone hanger in a convenient location using the screws for sheet metal or plastic. The hanger must be connected to chassis ground for proper operation of functions such as monitoring and scan. If required, ground the hanger using the included ground wire.

Figure 2-3 [not used]

2.4 POWER CABLE INSTALLATION

NOTE: As described in Section 2.1,connect the power cable directly to the vehicle battery, and to an unswitched power source so that it de-affiliates when power is turned off.

2.4.1 STANDARD MODELS

Refer to Figures 2-1 or 2-2 and proceed as follows:

1. Disconnect the negative cable from the battery to prevent damage from accidental short circuits.
2. Route the red and blue power cables to the battery. To minimize the chance of a short circuit occurring in the unfused portion of the cable, make sure the fuseholder is connected as close as possible to the positive battery terminal.
3. As described in Section 2.1, if there is excess cable, cut it to length. It may also be necessary to cut the cable if it must be routed through an opening that is not large enough to clear the fuseholder. Splice the wires by tightly wrapping them together and then soldering the connection (do not use a butt splice connector). Insulate the connection using electrical tape or heat shrink tubing.
4. Connect the red power cable to the positive (+) terminal of the battery.
5. Connect the blue cable to the negative (–) battery terminal.
6. Plug the power cable into the transceiver and reconnect the negative battery cable.
7. Install the antenna according to the manufacturer's instructions (see Section 2.1). Check VSWR. Reflected power should be less than 4% of forward power (VSWR less than 1.5 to 1).

Figure 2-4 [not used]

2.5 ACCESSORY CABLE INSTALLATION

NOTE: The accessory cable ignition sense input must be connected for the transceiver to power up. Also, a speaker jumper may need to be installed to enable the internal speaker. Refer to the following for more information.

2.5.1 GENERAL

Accessory Cable Kit, Part No. 023-9750-011, is standard and is used for connecting such things as the ignition sense line and external speaker to the accessory pigtail coming from the back of the transceiver.

Two 8-pin connectors are included in this kit. One has a jumper installed from Pin 1 to 3 for routing audio back into the internal speaker (see Section 2.7) and the other does not have any wires installed. Also included are two 22-foot (6-meter) and three 2-foot (0.6-meter) wires with attached pins that can be used as required. Refer to Figure 2-5 and install this cable as described in the following information.

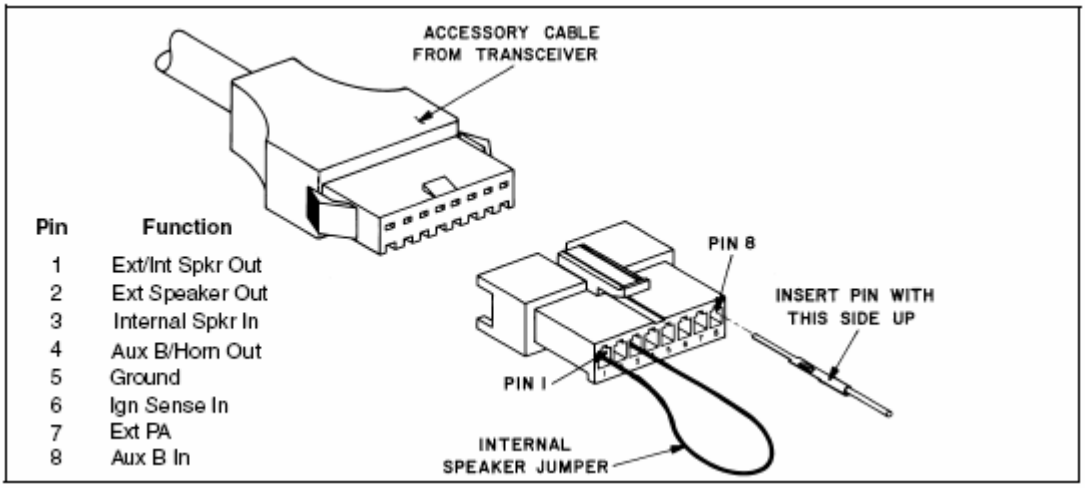

Figure 2-5 Accessory Jack

2.5.2 IGNITION SENSE INPUT (PIN 6)

NOTE: As previously described, the ignition sense line must be connected to a switched or unswitched power source for the transceiver to power up.

This ignition sense line is Pin 6 of the accessory connector, and it is connected using an included wire assembly. When the ignition sense input is connected to a source switched by the vehicle ignition switch, it provides the following functions.

1. Power automatically turns on and off with the ignition switch.
2. A turn-off delay can be programmed (see Section 3) which may prevent accidental discharge of the vehicle battery if the transceiver is left on for extended periods (1 or 2 days). Standby current (power on, receiver squelched) is approximately 600 mA.

   If these features are not used and transceiver power is to be controlled by the front-panel power switch only, the ignition sense input can be connected to an unswitched source.

2.5.3 SPEAKER PINS (PINS 1, 2, 3)

Refer to Section 2.7 for speaker installation information.

2.5.4 AUXILIARY B OUT (PIN 4)

General

This output can be programmed for one of the following functions. The enabled condition is a low output and the disabled condition is a high impedance state. Maximum sink current is approximately 1.0 ampere, so a driver circuit may be required.

The Auxiliary B output is connected using one of the wires included in the accessory wire kit. Insert the pin of the wire assembly into the Pin 4 slot of the connector as shown in Figure 2-5. Then connect the other end to the external device.

Horn Alert

To use the horn alert, a Horn option switch, Cadence Style, and Auxiliary B Horn output must be programmed. Refer to Section 4.7 of the operating manual (see Section 3) and the programming manual referenced in Section 4 for more information. (The Aux B output is programmed on page 2 of the Global screen.)

When the horn alert sounds, Pin 4 of the accessory connector goes low. If a relay is used, a diode should be connected across the relay coil with the cathode toward the battery side. This protects Q6 on the logic board from the voltage spike produced when the relay de-energizes. A horn circuit example is shown in Figure 2-6.

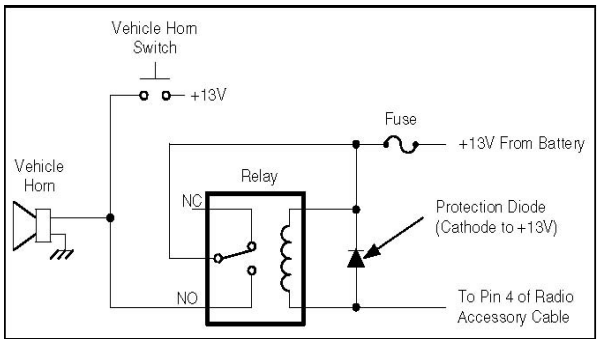

Figure 2-6 Horn Circuit Example

Siren Backlight

The "Backlight" function of the Auxiliary B output is programmed when the optional siren is used. The siren control head backlight then turns on and off with the radio control head backlight. A separate siren control pigtail cable is installed and provides the Auxiliary B output signal to the siren controller (Pin 4 of the accessory connector is not used).

Site Trunking

The "Site Trunking" function of the Auxiliary B output provides an external indication such as a light when site trunking is occurring. This function is available with SmartZone and Project 25 trunked operation.

2.5.5 EXTERNAL PUBLIC ADDRESS (PIN 7)

An external public address system can be connected to Pin 7 of the accessory connector. The PA option switch is required to control this feature. In the public address mode, microphone audio is always routed to the PA system, and the transceiver can be programmed so that receive audio is also routed. This is a low-level output, so some type of amplifier is required.

2.5.6 AUXILIARY B INPUT (PIN 8)

This input can be programmed for the following functions. This input is activated by a high voltage and deactivated by a low voltage or no signal (high impedance).

External Emergency Switch

When this function is programmed, an emergency condition can be triggered using an external emergency switch such as a foot-operating type.

PA Broadcast

This function is used with the optional Transit Bus PA system to allow an external public address select switch to be used instead of the normal front panel option switch.

2.6 REMOTE CONTROL UNIT INSTALLATION

NOTE: Refer to Section 2.10 for handheld control unit installation information.

2.6.1 GENERAL

The remote control configurations that may be used are as follows:

Single Remote - A remote control unit is connected to the remote mount radio (without operating controls). This configuration is shown in Figure 2-2.

Single Remote, Dual Controls - A remote control unit is connected to the front mount radio. This allows control from both the radio front panel and the remote control unit. This configuration is a combination of Figures 2-1 and 2-2.

Dual Remotes - Two remote control units are connected to a remote mount radio. This allows control from both remote control units. With this configuration, a second remote control unit pigtail is used. One pigtail is connected to J6 on the logic board and the other to J1. This configuration is similar to Figure 2-2.

Before installing the remote control units in the vehicle, check operation. If volume control is not operating as desired, some DIP switches inside the control unit may need to be reconfigured. Refer to the next section for more information.

NOTE: *With dual control or remotes, for system power to turn off, the Power switches of both control units must be off. Since the selected mode is not indicated by the push button switch, it is recommended that only one control unit be used to switch power.*

2.6.2 CONTROL UNIT BOARDS

Controller Board

The controller board uses only DIP switches for programming, as shown in Figure 2-7.

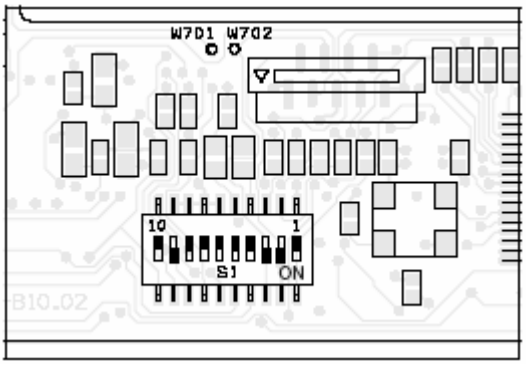

Figure 2-7 Display Controller Board

Figure 2-8 **[not used]**

Audio PA Board

The audio PA board has a 5-pin connector for connecting to the controller board.

Table 2-1 Control Unit DIP Switch S1 Settings

Configuration (see Section 2.6.1)	**Master/Slave Setting (S1-8/S1-9) [1]**	**Volume Control Setting S1-2 [2]**
Front mount transceiver only	Master*	Don't Care
Remote control unit, single control Standard internal speaker used Optional external speaker used	 Master* Master*	 On* Don't Care [5]
Dual control, standard configuration [3] Front mount transceiver control unit Remote control unit	 Master* Slave	 Don't Care On*
Dual control, alternate configuration [4] Front mount transceiver control unit Remote control unit	 Slave Master*	 Don't Care Don't Care [5]
Dual Remotes, internal speakers used Remote control unit 1 (either control unit) Remote control unit 2 (other control unit)	 Master* Slave	 On* On*
Dual Remotes, one internal/one external speaker used Control unit controlling external speaker Remote control unit with internal speaker	 Master* Slave	 Don't Care [5] On*
Handheld Control Unit, Dual Controls, (HHC + front mount radio, single internal/external speaker available) Volume Controlling Unit Other Ctrl Unit	 Master* Slave	 N/A/Don't Care N/A/Don't Care

Handheld Control Unit, Dual Remotes (HHC + remote control unit, two speakers available) HHC (controls external speaker) Remote control unit (controls int. speaker)	 Master* Slave	 N/A On*

* - Default setting, no change usually required.
[1] Master = S1-8 Off/S1- 9 On; Slave = S1-8 On/S1-9 Off
[2] S1-3 is always On and S1-10 is always Off. Set using DIP switches S1-2, 3, and 10.
[3] The volume of each internal speaker is controlled independently by the local volume control. If an external speaker is used, it is controlled by the front mount transceiver and the radio internal speaker is inactive.
[4] This configuration allows an external speaker to be controlled by the remote control unit. However, both internal speakers and the volume control of the front mount transceiver are then inactive.
[5] When a remote control unit controls an external speaker and the internal speaker is not used, disable the internal speaker by disconnecting the internal PA board from the display controller board (see Section 2.6.4).

2.6.3 SETTING MASTER/SLAVE SWITCHES

With two control units, the control unit designated as the Master controls the external or front mount radio speaker. Switches 8 and 9 of DIP switch S1 on the display controller board (see Figure 2-7 or 2-8) set the Master/Slave configuration of the control unit as follows. This switches function the same on both boards. Set these switches as indicated in Table 2-1 if applicable.

Master = SW 8 Off, SW 9 On (default)
Slave = SW 8 On, SW 9 Off

2.6.4 CONFIGURING VOLUME CONTROL

S1-2, 3, and 10 select the volume control mode. These switches can almost always be left in the default mode (S1-2 and 3 = On, S1-10 = Off). Additional information follows.

- If controlling an external speaker and the internal speaker is not used, disable the internal speaker by disconnecting the control unit audio PA board from the controller board.
- If controlling the local internal speaker when equipped with the unrevised audio PA board (hardwired to controller board), S1-2 = Off or R756 Out.

2.6.5 MOUNTING REMOTE CONTROL UNIT

A diagram showing a remote transceiver installation is located in Figure 2-2. The control unit mounting bracket, 17-foot (5-meter) control cable, and mounting hardware are included. Proceed as follows:

1. Check the area behind the selected mounting location to make sure that there is nothing that will be damaged when the mounting screws are installed. Then install the mounting bracket using the included self-drilling screws or others if desired.
2. Install the control unit in the bracket using the included plastic washers, spring washers, and knobs as shown in Figure 2-2.
3. Install the microphone hanger in a convenient location using the included screws for sheet metal or plastic as applicable. The hanger must be connected to chassis ground for proper operation of functions such as monitoring and scan. If required, ground the hanger using the included grounding wire.
4. Route the control cable from the transceiver to the control unit and plug it into both as shown in Figure 2-2. With dual remotes, there are two remote pigtails coming from the back of the radio.

2.7 CONNECTING THE SPEAKER

2.7.1 USING STANDARD INTERNAL SPEAKER

CAUTION

The audio amplifier in the transceiver is designed to withstand momentary grounding of the speaker outputs. However, do not connect either speaker output to supply voltage because serious damage will result.

Front Mount Transceiver - Insert the plug with the jumper from Pin 1 to 3 into the accessory jack (see Figure 2-5). This routes the audio on Pin 1 back in to the internal speaker connected to Pin 3. The other internal speaker terminal is internally connected to Pin 2.

Remote Control Unit - In the standard configuration, the internal speaker in the control unit is used, and no special connections are required. Low level audio from the control cable is routed to a 3-Watt audio amplifier in the control unit. The use of a separate amplifier permits independent volume control in dual control applications and also minimizes noise.

NOTE: The two wires on the transceiver end of the control cable are not used in this application, so they should remain unconnected.

2.7.2 USING AN OPTIONAL EXTERNAL SPEAKER

If an optional external speaker is used, it should be a 4-Ω, 15-watt speaker such Part No. 250-0151-006 shown in Figure 2-1 or 2-2. Proceed as follows to connect this speaker:

1. The external speaker is connected to Pins 1 and 2 of the accessory connector shown in Figure 2-5 (the order is not important). If installing the -006 speaker, pins are already installed on the speaker wires. Locate the connector included in the accessory wire kit that does not have pins 1 and 3 jumpered and insert one pin into the Pin 1 location and the other into the Pin 2 location.

2. If installing some other speaker, use the 2-foot (0.6-meter) or 22-foot (6-meter) wire assemblies included in the accessory wire kit as required.

NOTE: In dual control/remote applications, this speaker can be controlled by either the

transceiver or remote control unit. Refer to Table 2-1 and Section 2.6 for information on how to set up the control unit for each configuration.

2.9 TRANSCEIVER MOUNTING TRAY INSTALLATION

2.9.1 DESCRIPTION

Optional Transceiver Locking Tray, Part No. 585-7000-185, is a lockable mounting bracket for 4300 and other transceivers that use the standard chassis. This bracket provides theft protection and also allows the transceiver to be quickly removed from the vehicle with a key.

2.9.2 INSTALLATION

Refer to Figure 2-9 and proceed as follows:

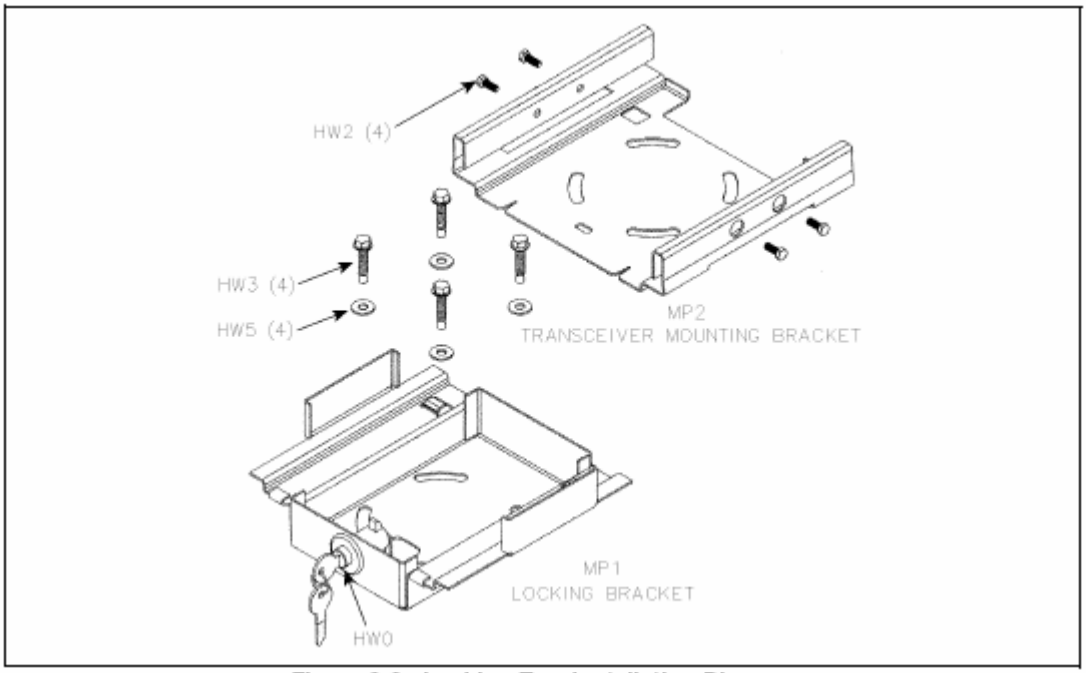

Figure 2-9 Locking Tray Installation Diagram

1. Install the transceiver in bracket MP2 using the four 10-32 x 1/2” screws (HW2) included. If desired, this mounting bracket can be used to mount the transceiver directly to the vehicle.

2. Install lock bracket MP1 using the four self-drilling screws (HW3) and washers (HW5) included. Make sure that there is nothing under the mounting location that will be damaged.

2.9.3 LOCKING/UNLOCKING TRANSCEIVER

To insert the transceiver with attached mounting bracket into the locking bracket, set it over the locking bracket and push it rearward slightly if necessary so that it seats. Then pull it forward until it latches. The lock operates in a manner similar to most glove compartment locks. To

release the transceiver, press the button and at the same time push the transceiver rearward. The key locks the button so that it cannot be pressed.

2.10 HANDHELD CONTROL UNIT INSTALLATION

2.10.1 GENERAL

The Handheld Control Unit replaces the standard control unit and DTMF microphone in remote mount applications. It does not contain an internal speaker, so an external speaker must be used. This control unit plugs directly into the remote control unit pigtail cable on the back of the transceiver or into an optional junction box. This junction box provides the following additional jacks (see Figure 2-10).

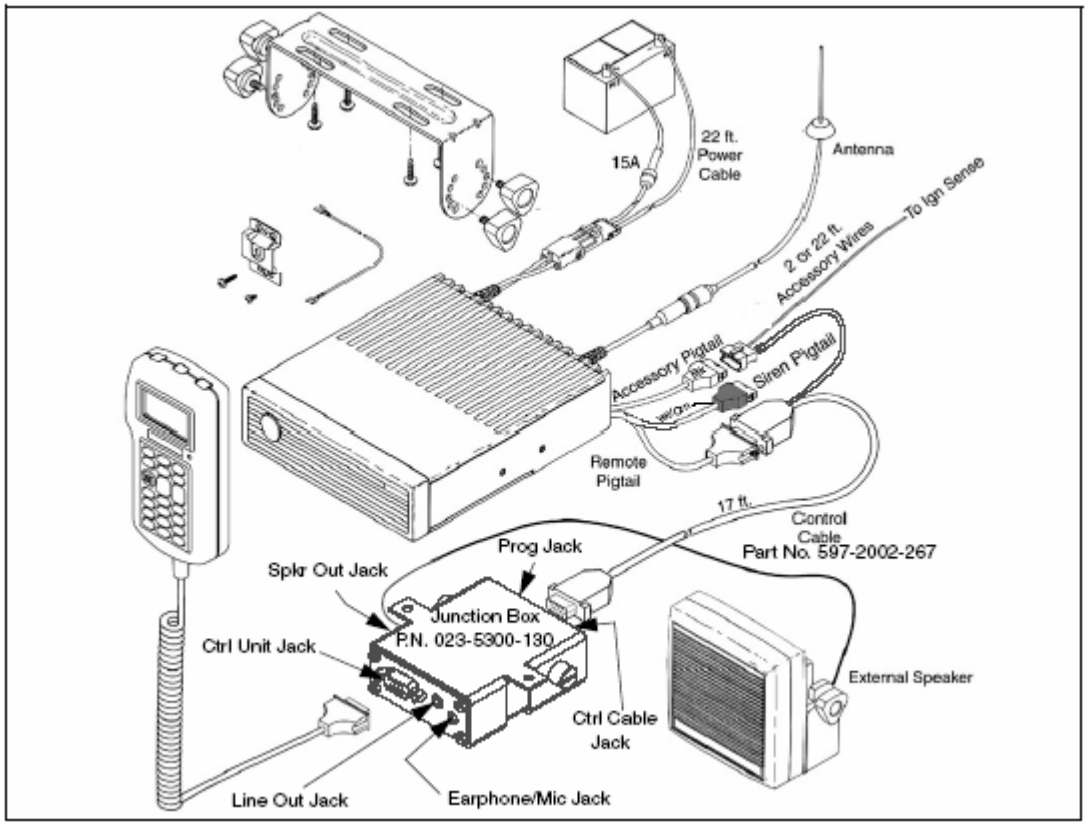

Figure 2-10 HHC Installation Components (Optional Junction Box Used)

Speaker Out Jack - Output for connecting an external speaker. When the junction box is not used, the speaker is connected to the accessory pigtail of the transceiver.

Line Out Jack - Connection point for a tape recorder or some other device. The output signal at this jack is 1 V peak-to-peak, 600-Ω (nominal), and consists of composite receive and transmit audio.

Earphone/Microphone Jack - A three-conductor jack for connecting a combination earphone and microphone. The external speaker audio is automatically muted when this jack is used. There

is no PTT line associated with this jack, so the transmitter must still be keyed using the control unit PTT switch.

Programming Jack - A standard eight-pin jack for connecting the computer and RPI to program the transceiver.

NOTE: The junction box is required to program the transceiver when this control unit is used.

2.10.2 INSTALLATION INSTRUCTIONS

Optional Junction Box Used (Figure 2-10)

1. Install the transceiver as described in Sections 2.2 to 2.5. Connect the microphone hanger to chassis ground as described.
2. Mount the junction box in a convenient location near the control unit using the included mounting bracket and hardware.
3. Route the 17-foot (5-meter) control cable from the transceiver to the junction box as shown in Figure 2-10. Connect it between the remote pigtail of the transceiver and the male DB9 jack of the junction box.
4. The two wires coming from the connector on the transceiver end of the control cable route speaker audio to the junction box. Insert the pins on these wires into the Pins 1 and 2 slots of the accessory cable connector.

NOTE: The accessory and siren pigtail cables have the similar connectors. Be sure to connect to the black accessory connector, not the yellow/orange siren connector.

If a jumper has been connected between Pins 1 and 3 on the accessory connector, remove it. A speaker can also be connected directly to Pins 1 and 2 if desired. Refer to Section 2.7.2 for more information.

5. Plug the 4.0-Ω external speaker into the SPKR OUT jack of the junction box. Plug the control unit into the male DB9 connector of the junction box.
6. If applicable, connect the tape recorder or other device to the LINE OUT jack.
7. Connect the earphone or earphone/microphone to the EARPHONE/MIC jack (the external speaker automatically mutes when an earphone is connected to this jack). The earphone output is the “tip” of the jack and the microphone input is the “ring” (ground is the “sleeve”).

Junction Box Not Used (Figure 2-11)

The Handheld Control Unit can be plugged directly into the remote pigtail of the transceiver in applications where the transceiver and control unit are located near each other.

In other applications where the transceiver is mounted remotely, optional 17-foot Control Cable, Part No. 597-2002-267, is required to connect the control unit to the transceiver. Proceed as follows:

1. Install the transceiver as described in Sections 2.2 to 2.5. Connect the microphone hanger to chassis ground as described.
2. Route the 17-foot (5-meter) control cable from the remote pigtail of the transceiver to the control unit as shown in Figure 2-11. Secure the connectors using the captive screws.

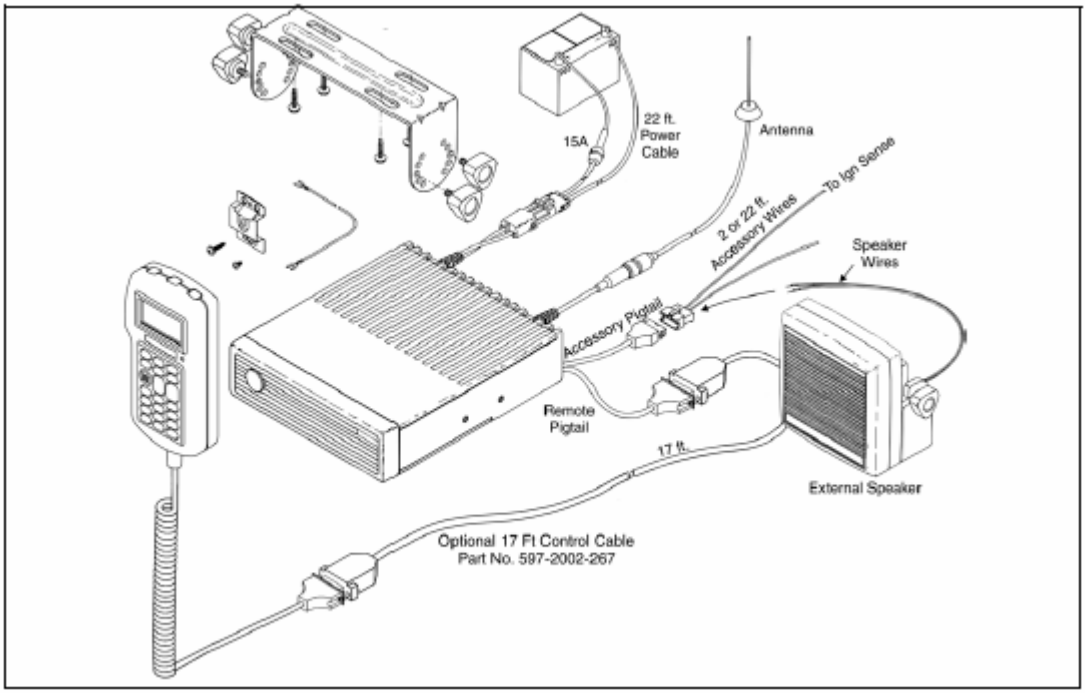

Figure 2-11 HHC Installation Components (Junction Box Not Used)

3. Connect the external speaker to Pins 1 and 2 of the accessory pigtail as described in Step 4 of the preceding section.

2.10.3 USING HHC TO PROVIDE DUAL CONTROLS OR DUAL REMOTES

Dual Control Configuration

The handheld control unit can connected to a front mount transceiver to provide dual controls. However, operation in this configuration may not be suitable because only one speaker is available for both control units.

Either the internal speaker in the front mount radio or the external speaker connected to the accessory cable (see Section 2.7) or junction box can be used. Connecting both speakers in parallel is not recommended because the audio amplifier may become overloaded.

One control unit must be designated the Maser and the other the Slave (see Section 2.6.3). The Master provides volume control. The other S1 switches should be left in the default configuration.

Dual Remote Configuration

Both the HHC and a remote control unit can be used to provide dual remote control units. The HHC is connected to one remote pigtail and the remote control unit is connected to the other. The HHC provides volume control of the external speaker and the remote control unit controls its local internal speaker.

The HHC is designated the Master and the remote control unit the Slave (see Section 2.6.3). The remote control unit volume control switches should be left in the default configuration (see Section 2.6.4).

2.10.4 TRANSCEIVER PROGRAMMING WITH HHC

The programming setup used to program a transceiver equipped with the Handheld Control Unit is similar to that used with the standard control units. The programming cable is connected to the junction box using a special adapter. Refer to Section 4.1.4 for more information.

Only one transceiver programming parameter must be changed when the Handheld Control Unit is used. Set the "Controller Type" parameter on the Global screen of the PCConfigure programming software for "Handheld" instead of "Normal".

4. There is also a DIP programming switch on the handheld controller board. Generally, the ten switches of this switch should be left in the default position which is switches 2, 3, 6, and 9 "On", and the others "Off". The only time any of these switches may need to be changed is when the HHC is used in a dual control or dual remote configuration as described the preceding section.

2.11 SIREN OPTION INSTALLATION INSTRUCTIONS

2.11.1 GENERAL

The 4300 Siren Kit, Part No. 250-5300-100 [What is the part number of the 4300 part?], contains a siren amplifier, siren controller, and all the cables and hardware normally required to install this option. This kit connects to an E.F. Johnson 4300 mobile transceiver. The siren loudspeaker is optional, and the following models are available:

Part No. 585-5300-007 [What is the part number of the 4300 part?]**-** Model TS100 for light bar installation

Part No. 585-5300-009 [What is the part number of the 4300 part?]**-** Model MS100 for compact (behind grille) installation.

2.11.2 TRANSCEIVER PROGRAMMING

For proper operation of the siren controller backlight, a transceiver programming parameter may need to be changed. On the Global screen of the PCConfigure programming software (see Section 4), set the "Auxiliary B Toggle" parameter for "Backlight". The Siren Control Head backlight then turns on and off with the transceiver control unit backlight.

2.11.3 INSTALLATION PROCEDURE

Refer to Figure 2-12 and proceed as follows:

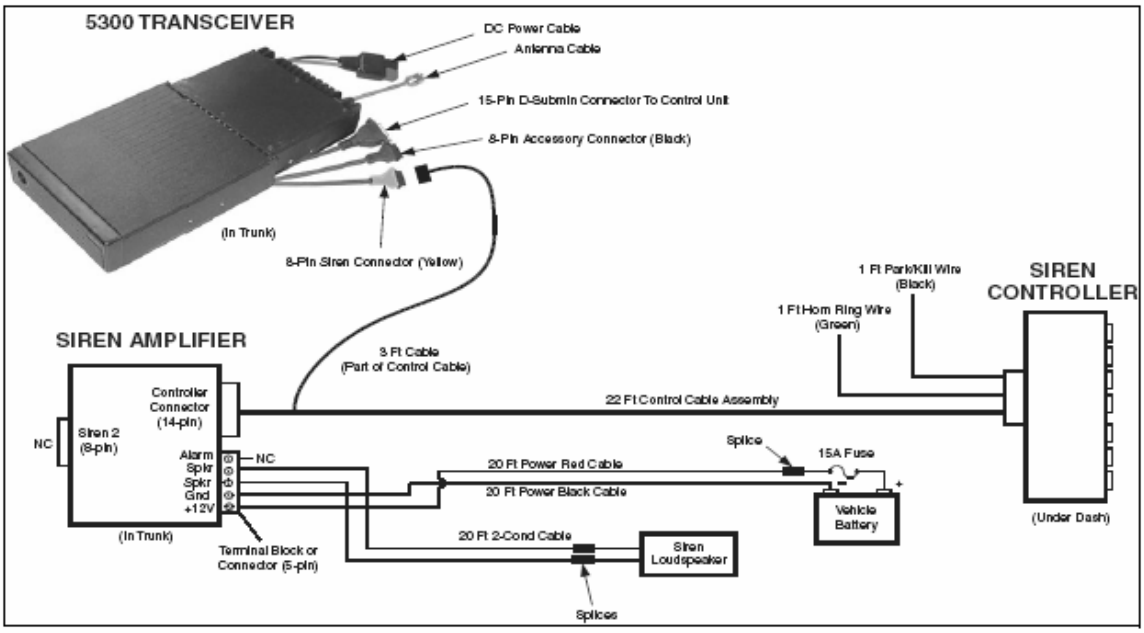

Figure 2-12 Siren Installation Diagram

1. Mount the siren amplifier near the transceiver [the connecting cable to the transceiver is approximately 3 feet (0.9 meters) long].

2. Mount the siren controller in the desired location [the connecting cable to the amplifier is approximately 22 feet (6.7 meters) long].

3. Mount the siren loudspeaker in the desired location [the connecting cable to the amplifier is approximately 20 feet (6.1 meters) long]. Refer to the installation instructions included with the speaker for more information.

4. Connect the included 22-ft (6.7m) control cable assembly between the amplifier, transceiver, and controller as shown in Figure 2-12. Be sure to connect it to the yellow (or orange) 8-pin siren pigtail of the transceiver (not the black 8-pin accessory pigtail).

NOTE: Connect the power cable directly to the vehicle battery. Connection to other locations may result in excessive noise in the audio signal when using the PA function.

5. Connect the included fuseholder to the positive (+) battery terminal using the included ring terminal or another connector as required.

6. Connect the included red cable from the +12V terminal on the amplifier to the fuseholder using the included solder splice connector. This connector contains internal solder that melts when heated sufficiently.

7. Connect the included black cable from GND terminal on the amplifier to the negative (–) battery terminal using the included ring terminal or some other connector as required.

8. Connect the loudspeaker to the SPEAKER terminals on the amplifier using the included 2-conductor cable and solder splice connectors (the order is not important).

9. If the siren is to be automatically disabled when the vehicle is in Park or Neutral, connect the black wire coming from the siren controller connector to the neutral safety switch.

10. If the vehicle horn is to sound with the siren, connect the green wire coming from the siren control head connector to the vehicle horn circuit.

SECTION 3 OPERATION

3.1 GENERAL

The operation description for the 4300 mobile transceiver is included on a separate manual.

SECTION 4 TRANSCEIVER PROGRAMMING

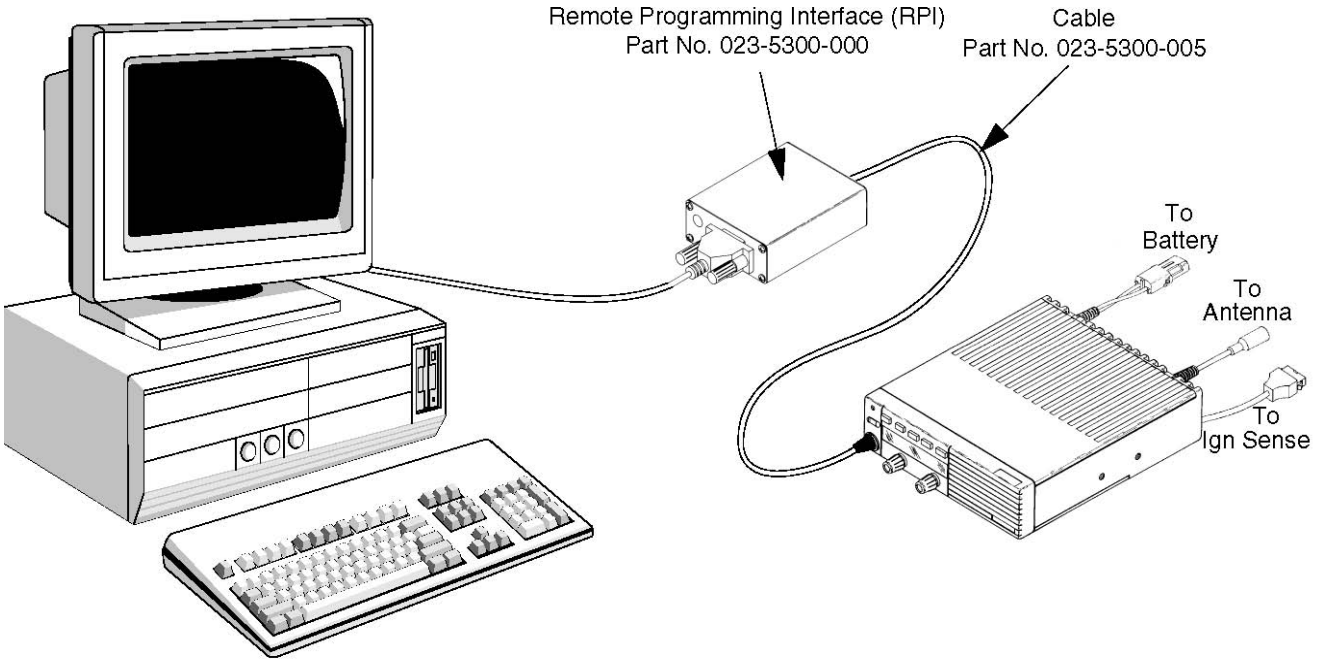

Figure 4-1 Programming Setup (Standard Front/Remote Models)

4.1 GENERAL

4.1.1 PROGRAMMING SETUP

The following items are required to program the transceiver. The part numbers of this equipment are shown in Table 1-1 in Section 1. The programming setup is shown above.

- A Windows®-based computer (see next section)
- Remote Programming Interface (RPI), Part No. 023-5300-000
- Programming cable from RPI to transceiver (see Section 4.1.3 for more information).
- EFJohnson PCConfigure programming software, Part No. 023-9998-488.

NOTE: The -005 cable, -000 RPI, -488 software, and a CD manual are included in the 5300 Series Programming Kit, Part No. 250-5000-004. [What are the part numbers of the 4300 parts?]

4.1.2 COMPUTER DESCRIPTION

The computer used to program this transceiver should meet the following minimum requirements:

. • Windows 95/98/NT/2000 (3.1 cannot be used)
. • Pentium® processor or equivalent
. • 16 MB of RAM
. • A hard disk drive with at least 5 MB of free space

. • A CD-ROM drive
. • An available serial port

4.1.3 CONNECTING COMPUTER TO TRANSCEIVER

NOTE: [What are the part numbers of the 4300 parts?] *Only RPI, Part No. 023-5300-000, can be used to program the 5300-series transceiver. Other RPIs such as 023-9800-000 and 023-9750-000 are not compatible with this transceiver.*

Connecting RPI To Computer

The Radio Programming Interface (RPI) provides the required logic interface between the computer and transceiver. The cable from the RPI to computer is not included with the RPI. The RPI has a female DB9 connector, and most computer serial ports have a male DB9 or DB25 connector. Therefore, a male DB9 to female DB9 or DB25 is usually required. This is a standard cable available at most computer supply stores or order 6 ft. DB9M to DB9F cable, Part No. 597-5900-002.

Connecting RPI To Transceiver

The programming setup for a front mount transceiver is shown in Figure 4-1. With transceivers that use the standard front or remote control unit, the cable from the RPI plugs into the microphone jack of the transceiver or control unit. This cable is Part No. 023-5300-005 [What is the part number of the 4300 part?], and it is not included with the RPI. Connecting the programming setup to the handheld controller is described in the next section.

4.1.4 HANDHELD CONTROLLER PROGRAMMING SETUP

When the Handheld Control Unit is used (see Section 3), the same computer, RPI, and programming cable are used as with the standard front and remote models. In addition, the following components are required:

- The junction box (Part No. 023-5300-130 [What is the part number of the 4300 part?]) is required to provide a connection point for the RPI since the control unit does not have a programming jack. This box may not be included with some handheld control units.
- Adapter Plug, Part No. 023-5300-140 [What is the part number of the 4300 part?], is required to plug the 4300 programming cable into the rectangular 10-pin programming connector on the junction box (see following illustration).

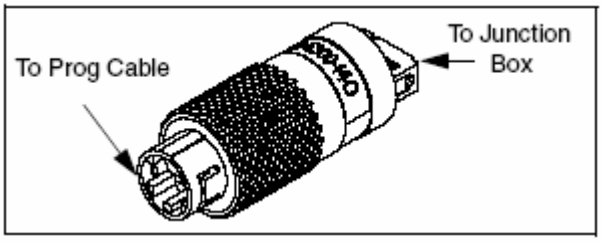

Programming Adapter Plug

Only one transceiver programming parameter must be changed when the Handheld Control

Unit is used. Set the “Controller Type” parameter on the Global screen of the PCConfigure programming software for “Handheld” instead of “Normal”.

4.1.5 SIREN PROGRAMMING

When the optional siren feature is installed (see Section 2.11), one transceiver programming parameter may need to be changed for proper operation of the siren controller backlight. On the Global screen of the PCConfigure programming software, set the “Auxiliary B Toggle” parameter for “Backlight”. The Siren Control Head backlight then turns on and off with the transceiver control unit backlight.

4.2 USING THE PCCONFIGURE SOFTWARE

The PCConfigure software is described in a separate CD-based manual included on the CD-ROM with the programming software.

SECTION 5 CIRCUIT DESCRIPTION

5.1 GENERAL TRANSCEIVER DESCRIPTION

5.1.1 INTRODUCTION

The E.F. Johnson 4300 is a microcontroller-based radio that uses a Digital Signal Processor (DSP) to provide the following modes of operation:

Narrowband Analog - FM modulation with a maximum deviation of 2.5 kHz. This mode is usually used in systems where the channel spacing is 12.5 kHz. Call Guard (CTCSS or DCS) subaudible squelch signaling can be used in this mode.

Wideband Analog - FM modulation with a maximum deviation of 5 kHz. This mode is usually used in systems where the channel spacing is 25 kHz or 30 kHz. Call Guard (CTCSS or DCS) subaudible squelch signaling can be used in this mode.

Project 25 Digital - The voice is digitized, error corrected, optionally encrypted and transmitted using C4FM modulation according to the Project 25 standard. This mode can be used in channel spacings of 12.5 kHz.

DES Encryption -This mode is compatible with the Motorola DES protocol. Voice is digitized, encrypted, and transmitted using FSK modulation. This mode can be used in channel spacings of 25 kHz. The DSP processes the received signals and generates the appropriate output signals. The microcontroller controls the hardware and provides an interface between hardware and DSP.

5.1.2 PC BOARDS

The 4300-series mobile contains the following PC board assemblies:

RF Board -Contains the receiver, synthesizer, and exciter sections.

PA Board -Contains the transmitter power amplifier, power control, and main DC power switching sections.

Logic Board - Contains the digital signal processing (DSP), control logic, and audio processing sections.

Interface Board - A small board that provides the electrical connections between the logic and RF/PA boards. It also contains the audio amplifier and volume control circuits for internal and external speakers.

Display Controller - Contains a microcontroller which provides an interface between the controller on the logic board and the front panel display and switches.

Display Board - Contains the liquid crystal display, option switch keypad, and display drivers. In addition, it contains the backlight for the display and keypad.

5.1.3 CIRCUIT PROTECTION (FUSES)

Circuit protection is provided as follows:

- An 8- or 10-ampere fuse in the power cable provides overall transceiver protection.
- A 2-ampere fuse on the RF board protects circuits on that board.
- F700 (2-ampere) on the display controller board protects the Sw B+ output of the microphone connector.
- F1 on the logic board protects the Sw B+ output of universal interface connector J5.
- The various voltage regulators provide circuit protection by automatically limiting current.

5.1.4 ANALOG MODE

Receive Mode

The signal is routed from the antenna connector through the PA board to the RF Board where it is filtered, amplified, and mixed with the first local oscillator frequency generated by the synthesizer. The resulting IF signal is also filtered and amplified and sent to the AD9864 digital IF chip.

The signal is then mixed with the second local oscillator frequency to create a second IF signal. The second IF signal is then sampled and downconverted to baseband. The baseband signal is then decimated to a lower sample rate that is selectable at 20 kHz. This signal is then routed via a serial interface from the IF chip to the DSP on the logic board.

On the logic board the DSP digitally filters the input signal and performs frequency discrimination to obtain the message signal. The DSP first performs a carrier- detection squelch function on the radio. If a signal is determined to be present, the audio portion of the signal is resampled and then filtered appropriately. The filtered signal is then routed back to a D/A in the CODEC to produce an analog signal for output to the audio power amplifier and then the speaker. Any detected signaling information is decoded and the resulting information is sent to the microcontroller.

Transmit Mode

The signal from the microphone is amplified and then routed to the CODEC chip where it is first digitized and then sent to the DSP. The DSP performs the required filtering, adds the desired signaling, converts the sample rate and then sends the resulting signal back to a D/A in the CODEC to produce the analog modulation signals for the VCOs. The modulated VCO signal is then sent to the RF power amplifier and transmitted.

5.1.5 PROJECT 25 DIGITAL MODE

Introduction

In Project 25 Digital Mode, the carrier is modulated with four discrete deviation levels. These levels are ± 600 Hz and ± 1800 Hz. Digitized voice is created using an IMBE™ vocoder. (IMBE™ voice coding technology embodied in this product is protected by intellectual property rights including patent rights of Digital Voice Systems, Inc.)

Receive Mode

The signal is processed in the same way as an analog mode transmission until after the squelch function is performed. If a signal is detected to be present, the DSP resamples the signal from 20 kHz to 24 kHz. This is done so that the sample rate is an integer multiple (5x) of the data rate of the digital modulation which is 4800 symbols/sec (9600 bits/sec).

The resampled signal is then processed by a demodulator routine to extract the digital information. The resulting bit stream (9600 bps) is sent to a routine that performs unframing, error-correction, and voice decoding. The result of these operations is a reconstructed voice signal sampled at 8 kHz. The sampled voice signal is sent to a D/A in the CODEC to produce an analog signal for output to the audio power amplifier and speaker.

Transmit Mode

The microphone signal is processed as in the analog mode until it reaches the DSP. At this point the audio signal is processed by a voice encoding routine to digitize the information. The resulting samples are then converted to a bit stream that is placed into the proper framing structure and error protected. The resulting bit stream has a bit rate of 9600 Hz.

This bit stream in then encoded, two bits at a time, into a digital level corresponding to one of the four allowable frequency deviations. This produces 16-bit symbols with a rate of 4800 Hz. The symbols are resampled to a rate of 48 kHz and filtered to comply with channel bandwidth requirements. The filtered signal is then sent to a D/A in the CODEC to produce the analog modulation signal for the VCO. The modulated VCO signal is then mixed up to the final transmit frequency and then sent to the RF PA for transmission.

5.2 VHF BOARDS

5.2.1 VHF RF BOARD

The RF Board is not field serviceable. It must be replaced as a unit with a new board.

5.2.1.1 RECEIVER

Front End Bandpass Filter

A harmonic filter is followed by a PIN diode transmit/receive switch. Following this switch a fixed tuned bandpass filter is used at the front-end of the receiver. This filter provides first image rejection with minimal loss in order to provide the desired receiver sensitivity. Following the filter a variable attenuator is used to increase the dynamic range of the receiver when receiving high level signals.

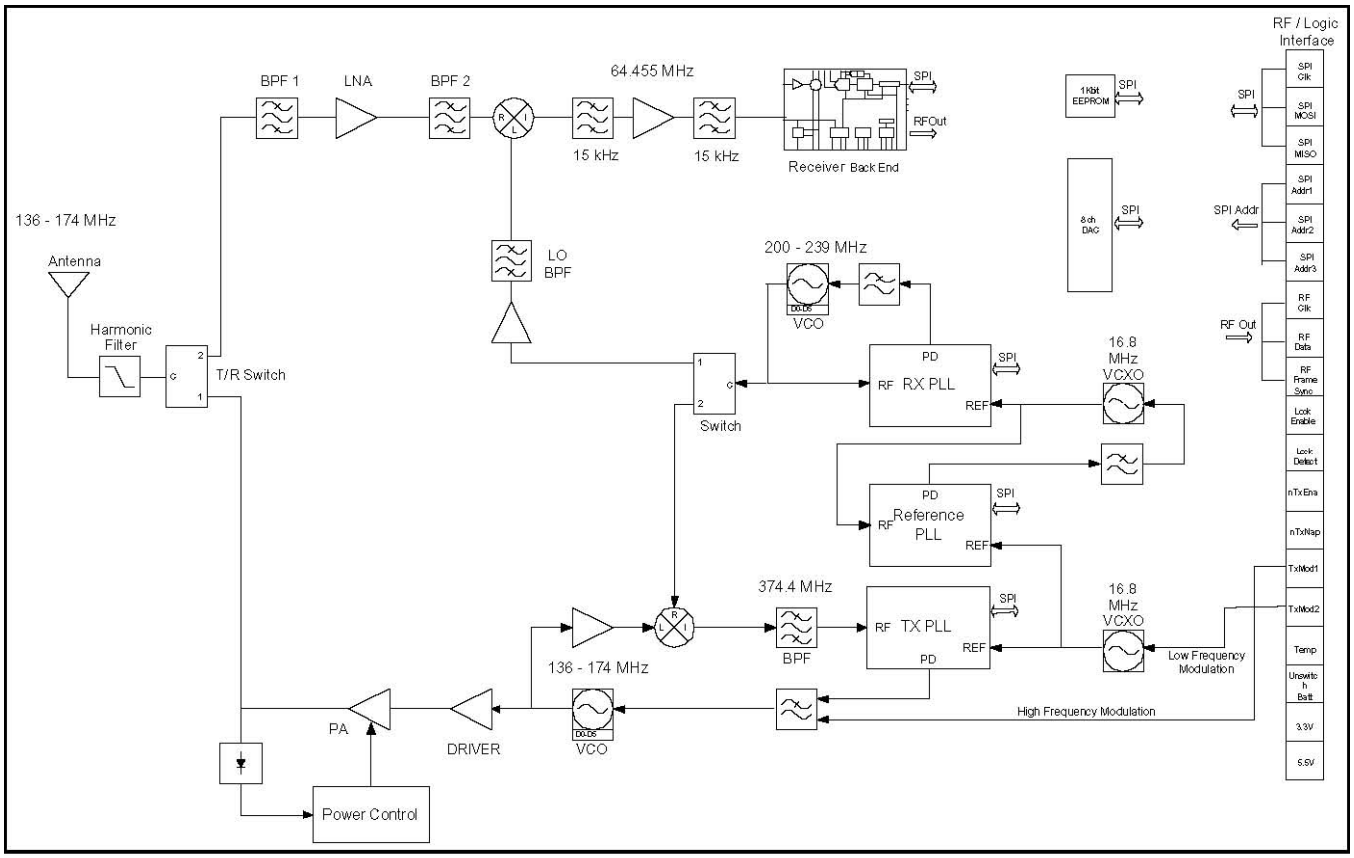

Figure 5-1 VHF RF Board Block Diagram

Front End LNA and Bypass Switching

The Low Noise Amplifier (LNA) is critical in determining the overall noise figure of the receiver chain. An MGA-71543 amplifier (U39) provides optimum noise figure, gain, intercept point, and power consumption.

Post-LNA Bandpass Filters

An additional bandpass filter is located after the LNA. This filter is identical to the front end filter previously described and provides additional image rejection.

Mixer and LO Filter

A double-balanced, low-level ADEX-10L mixer (MX1) with a LO drive level of +4 dBm is used for the first conversion. This mixer provides a good dynamic range with a 3 dB lower LO drive than the more traditional +7 dBm drive mixers. This reduces power consumption and also the conducted and radiated local oscillator leakage from the receiver.

High side injection is used to provide optimum spurious performance. A LO filter prior to the mixer LO port reduces wideband noise from the LO synthesizer which improves receiver sensitivity.

IF Filter and Amplifier

A two-pole 64.455 MHz crystal filter (U2) is used to provide the desired level of adjacent channel rejection while providing minimal amplitude and phase distortion within a 25 KHz bandwidth. Shields are installed around the crystal filter to provide sufficient isolation to meet the second image response specifications and to minimize noise pickup by the impedance-matching inductors (L1, L2, L3, L4 and L7.)

A transistor IF amplifier (Q1) and supporting circuitry is required to boost the signal strength, thereby reducing the overall noise figure. The noise figure, signal gain, intercept point, and power consumption are optimized in this design. An additional two-pole 64.455 MHz crystal filter (U25) is used to increase the adjacent channel rejection. An LC circuit provides the required impedance matching between the output of the IF filter and the input of the backend chip (U11.)

Back End IC

An Analog Devices AD9864 IF Digitizing Subsystem IC (U11) provides a variety of functions for the receiver as follows:

Second Local Oscillator - A varactor-tuned transistor (Q2) oscillator is phase-locked to a fixed frequency of 62.355 MHz for converting the first IF of 64.455 MHz to a second IF frequency of 2.1 MHz. Phase Locked Loop circuitry inside of the AD9864 operates with a phase-detector frequency of 15 kHz.

Second Conversion Mixer and Filtering - A mixer inside the AD9864 converts from the first IF of 64.455 MHz to the second IF of 2.1 MHz. External filters (L29 and L30) provide IF bandpass filtering. Additional filtering is provided by the inherent operation of the sigma-delta analog/digital converters.

Gain Control - This device provides up to 12 dB of AGC range via a combination of analog and digital controls. Additionally, there is a 16 dB attenuator in the front end. The optimum settings are controlled by the host microprocessor.

Analog/Digital Conversion and Processing - Sigma-delta converters provide I and Q sampling directly from the second IF frequency. The resulting digital words are first filtered by internal programmable FIR filters and then clocked out of the AD9864 via a serial data bus using a programmable data rate.

5.2.1.2 SYNTHESIZER

The following three phase locked loops are used in the VHF radio module to provide the required overall functionality and performance levels.

Receive PLL

The receive PLL provides a signal that is in the frequency range of 200 to 239 MHz. In receive mode it is programmed for a frequency that is 64.455 MHz above the receive frequency. In transmit mode it is programmed for a frequency that is equal to 374.4 MHz minus the desired transmit frequency.

Transmit PLL

The transmit PLL phase locks a transmit oscillator that is operating at an output frequency of 138 to 174 MHz. The RF signal into the PLL chip is created by mixing the transmit frequency with the receive PLL frequency to generate a mix frequency of 374.4 MHz. This provides low frequency modulation of the VCO by modulating the transmit PLL reference frequency.

Reference PLL

The reference PLL phase locks the receive PLL reference oscillator to the transmit PLL reference oscillator with a loop bandwidth of less than 10 Hz. This PLL ensures that the center frequency of both reference oscillators are the same. It also limits the modulation of the receive PLL reference oscillator by the low frequency modulation applied to the transmit PLL reference oscillator.

PLL IC

Two CX72301 sigma-delta modulated PLL chips (U29 & U46) are used for the PLLs described above. This PLL chip provides good phase noise capabilities to reduce adjacent channel interference and quick switching between the receive and transmit modes.

Reference Oscillators

One 16.8 MHz oscillator (Y1) is used as the frequency reference for the receive PLL and also for the receiver backend IC.

The other 16.8 MHz oscillator (Y2) is used as the frequency reference to the transmit PLL. The center frequency of this oscillator is corrected using a DC tuning voltage from the digital board in the receive mode and it is modulated with voice or data in the transmit mode.

The receive PLL reference oscillator is phase locked to the transmit PLL reference oscillator as discussed above.

Analog Switches and PLL Loop Filters

An analog switch (U17) provides faster switching of signals during channel changes by varying the time constant of the PLL loop filter.

5.2.1.3 TRANSMITTER

Modulation

A “dual-port” modulation scheme is used to provide the DC coupling of the signal required for data modulation applications. In this scheme, modulation applied to the transmit PLL frequency reference provides low-frequency modulation, and modulation applied to the transmit PLL transmit VCO (U47) provides high-frequency modulation. Signals for both modulation ports are provided by DACs on the digital board.

Power Amplifier

The power amplifier (U3) is a Mitsubishi RA07M1317M module. This PA module provides the desired RF power output level and is stable over a wide range of VSWR conditions. The PA is driven by a SGA-6589 driver (U20) that typically provides +21 dBm output power. The PA is turned on and off by switching the power to this driver via transistor D10.

ALC

To maintain the specified transmitter output power level, Automatic Level Control (ALC) is used to control the drive level to the PA. The detected forward power is compared to a reference level provided by the digital board via op amp U21A. The resulting error voltage is applied to a power level control port of the power amplifier module. Transmitter on/off splatter filtering is provided by an RC network (R76, R12, C43 and C141.)

T/R Switching and Harmonic Filter

The output of the power amplifier is applied to the transmit/receive RF PIN switch (D12/D13). This is a high dynamic-range switch that is capable of passing the desired transmit power with minimal compression. Any harmonics generated by the PA module and the RF T/R switch are filtered by a harmonic filter that is located between the RF T/R switch and the antenna jack.

5.2.2 VHF 20-WATT PA BOARD

NOTE: A block diagram of the PA board is shown in Figure 5-2.

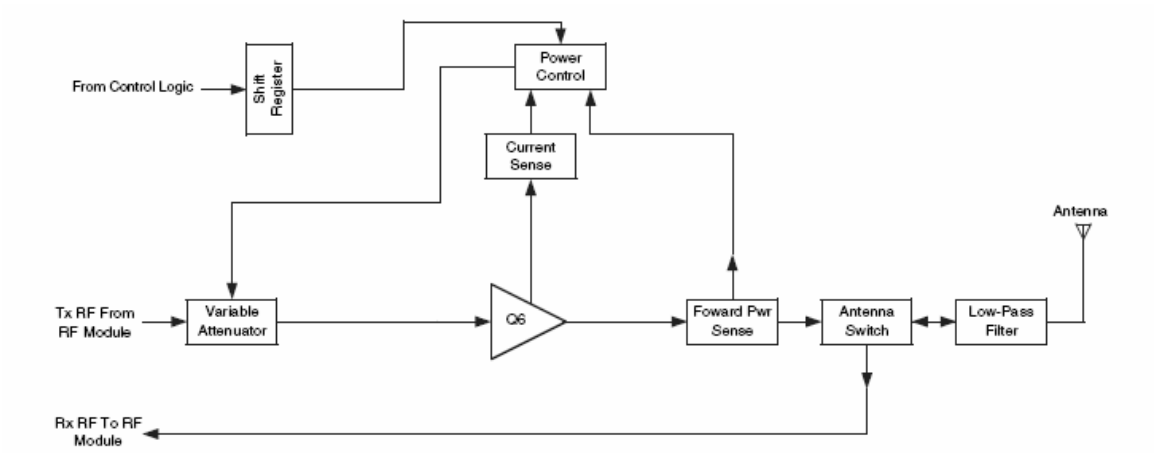

Figure 5-2 VHF 20-Watt PA Board Block Diagram

5.2.2.1 VARIABLE ATTENUATOR

Two RF signals are connected to the RF module from the PA board. One is the transmit RF output signal and the other is the receive RF input signal. The transmit signal is applied to a variable attenuator on the PA board formed by CR4-CR7 and several other components. This circuit adjusts the input RF level to Q6 to control the power output of the PA board. CR4-CR7 are PIN diodes which have a very high impedance when they are reverse biased or in the off mode.