LTR-Net™ 7200 Series

OPERATING MANUAL

TRUNKED PORTABLE RADIO

7243 LTR-NET™ PORTABLE

UHF

EFJohnson®

LAND MOBILE PRODUCT WARRANTY - The manufacturer's warranty statement for this product is available from your product supplier or from E.F. Johnson Company, 299 Johnson Avenue, Box 1249, Waseca, MN 56093-0514. Phone (507) 835-6222.

Copyright© 2001 by the E.F. Johnson Company

The E.F. Johnson Company, which was founded in 1923, provides wireless communication systems solutions for public safety, government, and commercial customers. The company designs, manufactures, and markets conventional and trunked radio systems, mobile and portable subscriber radios, repeaters, and Project 25 digital radio products.

Viking Head/EFJohnson logo, LTR®, LTR-Net™, and Call Guard® are trademarks of the E.F. Johnson Company. All other company and/or product names used in this manual are trademarks and/or registered trademarks of their respective manufacturer.

SAFETY TRAINING INFORMATION

WARNING

This radio produces RF electromagnetic energy when transmitting and is designed and classified for "Occupational Use Only". Radio equipment with this classification must be used only during the course of employment by individuals aware of the hazards and the ways to minimize such hazards. This radio is NOT intended for use by the General Population in an uncontrolled environment.

This radio has been tested and complies with FCC RF exposure limits for "Occupational Use Only". In addition, it complies with the following standards and guidelines with regard to RF energy and electromagnetic energy levels and evaluation of such levels for exposure to humans:

- FCC OET Bulletin 65 Edition 97-01 Supplement C, Evaluating Compliance with FCC Guidelines for Human Exposure to Radio Frequency Electromagnetic Fields.

- American National Standards Institute (C95.1-1992), IEEE Standard for Safety Levels with Respect to Human Exposure to Radio Frequency Electromagnetic Fields, 3 kHz to 300 GHz.

- American National Standards Institute (C95.3 -1992), IEEE Recommended Practice for the Measurement of Potentially Hazardous Electromagnetic Fields - RF and Microwave.

CAUTION

To ensure that your exposure to RF electromagnetic energy is within the FCC allowable limits for occupational use, always adhere to the following guidelines:

- DO NOT operate the radio without the proper antenna attached. This may damage the radio and cause FCC RF exposure limits to be exceeded. The proper antenna is the antenna supplied with the radio by the manufacturer or an antenna specifically authorized by the manufacturer for use with this radio.

- DO NOT transmit more than 50% of total radio use time (50% duty cycle). Transmitting for more than 50% of the time can cause FCC RF exposure compliance requirements to be exceeded. This radio is transmitting whenever **Tx** is indicated in the lower right corner of the display. Pressing the PTT switch on the side usually causes the radio to transmit.

- DO NOT use any accessories not specifically authorized by the E.F. Johnson Company for use with this radio such as batteries, speaker-microphones, belt clips, and antennas. The use of unauthorized accessories can cause FCC RF exposure compliance requirements to be exceeded.

- ALWAYS keep the antenna and radio at least 2.54 cm (1.0 inch) away from your body when transmitting to ensure FCC RF exposure compliance requirements are not exceeded. The best transmission quality results when the antenna is at least 5 cm (2 inches) away from your mouth and angled slightly to one side.

NOTE: The preceding information is provided to make you aware of RF exposure and what to do to ensure that this radio is operated within FCC RF exposure limits.

Electromagnetic Interference/Usage Compatibility

This device complies with Part 15 of the FCC rules. Operation is subject to the condition that this device does not cause harmful interference. In addition, changes or modification to this equipment not expressly approved by the E.F. Johnson Company could void the user's authority to operate this equipment (FCC Rules, 47CFR Part 15.19).

DO NOT operate it in areas that are sensitive to RF energy such as aircraft, hospitals, blasting sites, and fuel storage sites. Areas with potentially flammable atmospheres are usually, but not always, clearly posted. These may include gas stations, fuel and chemical storage and transfer stations, below deck on boats, and areas where the air contains flammable chemicals or particles such as grain dust or metal powders.

Dispose of the nickel metal-hydride battery used by this radio in accordance with local regulations. DO NOT dispose of it in fire because it can explode. Also, do not short the terminals because it may become very hot.

TABLE OF CONTENTS

SAFETY TRAINING INFORMATION 4
QUICK REFERENCE GUIDE 9
FEATURES 10
General Features 10
LTR-Net Features 10
LTR Features 10
Conventional Features 10
CONTROLS AND DISPLAY 11
Top Panel Controls 11
Side Controls 12
Display 13
Front Panel Keys 15
BASIC OPERATION 20
Power-Up Sequence 20
Backlight Operation 20
Setting Volume Levels 20
System/Group Display Mode 20
System and Group Select 21
Keypad Disable 22
Transceiver Lock 22
Low Battery Indication 23
Option Switches 23
LTR-Net, LTR, and Conventional Operation 23
GENERAL FEATURES 25
Bank Select 25
Call Indicator 25
Home System/Group Select 26
Proceed (Clear-To-Talk) Tone 26
Receive-Only Groups 26
Time-Out Timer 27
Tone Select 27
STANDARD GROUP CALLS 27
General 27
Placing a Standard Group Call 28
Receiving a Standard Group Call 29

TELEPHONE CALLS 30
General 30
Placing Telephone Calls 30
Receiving a Telephone Call 31
Landside-Originate Telephone Calls 32
LTR-NET AUXILIARY CALLS 32
General 32
Placing LTR-Net Auxiliary Calls 32
Receiving Auxiliary Calls 33
OPTION SWITCHES AND MENU MODE 34
Option Switches 35
Menu Mode 35
DIAL MODE 37
Introduction 37
Selecting Dial Mode 37
Dialing a Number 38
Sending the Number 38
Storing Numbers in Memory 38
Recalling Numbers From Memory 39
Exiting Dial Mode 39
Placing Calls Without Selecting Dial Mode 39
SYSTEM AND GROUP SCANNING 40
General 40
Scan List Programming 42
Scan Delay and Continue Timers 43
Transmitting In The Scan Mode 43
LTR-NET AND LTR FEATURES 45
Transmit Inhibit 45
Priority Calls 45
LTR-NET FEATURES 46
LTR-Net Standard Calls 46
LTR-Net Special Calls 46
Busy Queuing 46
Roaming 47
LTR FEATURES 48
Standard Group Calls 48
Telephone Calls 48

CONVENTIONAL FEATURES 48
Squelch Adjust 48
Monitoring Before Transmitting 49
Transmit Disable On Busy 50
Talk-Around 51
Call Guard Squelch. 51
MISCELLANEOUS 52
Supervisory Tones 52
LTR-Net Special Call Tones 53
LTR Telephone Call Tones 54
Display Messages 54
Menu Mode Messages 56
Rechargeable Battery Pack. 57
Battery Charger Operation 59
Speaking Into Microphone 60
Operation At Extended Range 60
Licensing 61
Transceiver Service 61
INDEX 61

QUICK REFERENCE GUIDE

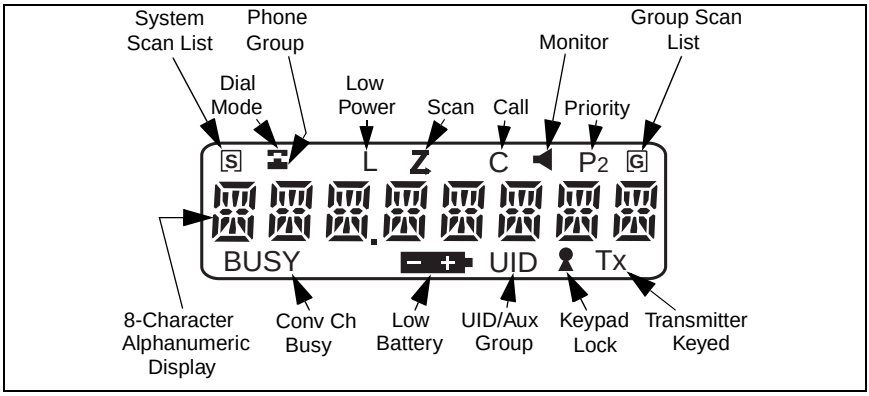

Change system number - Press SYS ◀ or ▶ or SYS (1-99) [pg 21]
Change group number - Press GRP ◀ or ▶ or GRP (1-99) [pg 21]
System scan on/off - FCN SCAN (Z indicates scanning is enabled) [pg 40]
Change scan list status of displayed system - FCN S.A/D (S indicates that the system is in the scan list and scanned normally) [pg 42]
Change scan list status of displayed group - FCN G.A/D (G indicates that the group is in the scan list and scanned normally) [pg 42]
Change between alpha and numeric display modes - FCN STR [pg 20]
Display home or last active system/group - FCN HOME [pg 26]
Select/Exit Menu Mode - FCN MENU [pg 35]
Lock/Unlock Keypad - FCN ▶ (🔒 indicates locked keypad) [pg 22]
Adjust Squelch (conventional only) - FCN SQL then ◀ and ▶ [pg 48]

NUMBER DIALING

Select dial mode without changing system/group - FCN DIAL [pg 37]
Select dial mode and telephone system/group - FCN PHONE [pg 37]
Transmit number in display - Briefly press PTT sw then FCN SND [pg 38]
Erase last number in display - CLR [pg 38]
Erase entire number in display - RCL CLR [pg 38]
Display overflow digits - FCN ▶ [pg 38]
Enter a pause - FCN ◀ [pg 38]
Store a number in memory - Enter no., then FCN STR (0-9) [pg 38]
Display numbers in memory - RCL (hold down to repeat) [pg 39]
Recall number from a memory location - FCN RCL (0-9) [pg 39]
Recall last number dialed - FCN RCL ▶ [pg 39]
Recall last number dialed from memory - FCN RCL ◀ [pg 39]
Exit dial mode and terminate call - FCN PHON [pg 39]
Exit dial mode without terminating call - FCN DIAL [pg 39]

For more information on a function, refer to the page number in brackets [xx].

FEATURES

General Features

- LTR-Net™, LTR®, and conventional operating modes
- Unique 8-character system identification tags
- System and group scan
- User programmable system and group scan lists
- Menu mode to select various functions
- Three programmable option switches
- Call progress tones
- Call indicator
- Receive-only groups
- Companding

LTR-Net Features

- Roaming (automatic locality search)
- Standard group (mobile-to-mobile) calls
- Special calls including telephone, unique ID, and directed group
- Busy queuing of special calls by radio system
- Transmit inhibit
- Receive priority calls

LTR Features

- Standard group and telephone calls
- Transmit inhibit
- Receive priority calls

Conventional Features

- Busy indicator
- Talk-around
- User-adjustable squelch level
- Monitor mode
- Call Guard® squelch control
- Transmit disable on busy

NOTE: System operator programming determines the availability of many of the preceding features.

CONTROLS AND DISPLAY

Top Panel Controls

On-Off Volume - Turning this knob clockwise turns power on and sets the volume level. Turning it counterclockwise to the detent turns power off. Power is on when information appears in the display. For more information on setting the volume, refer to page 20.

Option Switch 1 - This switch can be system operator programmed to control a specific function (see page 35).

Antenna Jack - Connection point for the antenna.

Accessory Connector - When the protective cover is removed, this connector can be used for connecting optional accessories.

Battery Release Button (Not shown) - This button is located on the bottom end of the transceiver, and it is pressed to release the battery so that it can slide downward and be removed from the radio.

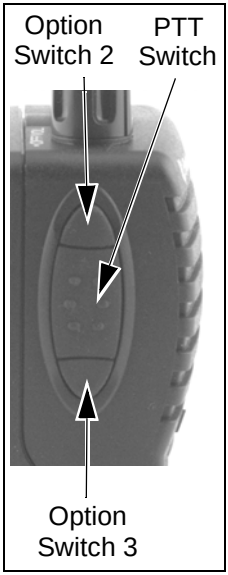

Side Controls

Option Switch 2 - This switch can be system operator programmed to control a specific function (see page 35).

PTT (Push-To-Talk) - Keys the transmitter so that a message can be transmitted. The “Tx” icon in the display indicates when the transmitter is keyed.

Option Switch 3 - This switch can be system operator programmed to control a specific function (see page 35).

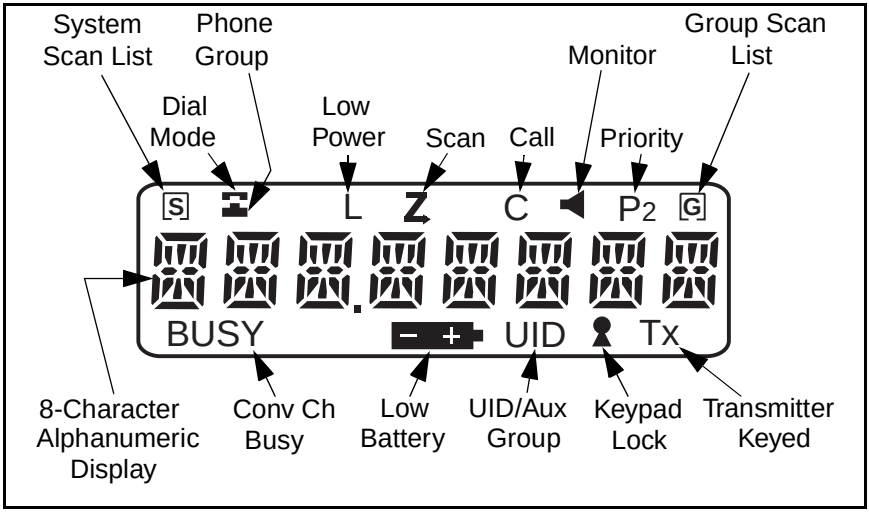

Display

8-Character Alphanumeric Display - This area of the display indicates the selected system/group (see “System/Group Display Mode” on page 20), the dialed number (see “Dial Mode” on page 37), error conditions, and other information.

S - Indicates that the displayed system is in the scan list and scanned normally (see “Scan List Programming” on page 42).

- The base portion of this icon is displayed when the displayed group is programmed for telephone calls. The top portion (receiver) is displayed when the dial mode is selected (see page 37).

L - Indicates that the low-power mode is selected by the menu mode or a low-battery condition (see page 26).

Z - Indicates that the scan mode is selected (see page 40).

C - Indicates that a call has been received on a group programmed for a call indicator (see page 25). Press any key to turn this indication off.

◀ - Indicates that the conventional monitor mode has been enabled by the Monitor option switch (see page 49).

P2 - “P” indicates that the displayed group is an LTR-Net/LTR priority 1 group, and “P2” indicates that it is a priority 2 group (see page 45).

G - Indicates that the displayed group is in the scan list and scanned normally (see page 42).

BUSY - Indicates that the selected conventional channel is currently busy with voice or other traffic.

− + - Indicates a low battery condition. The battery should be recharged or replaced as soon as practical (see page 23).

UID - Indicates that the displayed group is programmed for an LTR-Net Unique ID or Directed Group call (see page 46).

🔑 - Indicates that the keypad has been disabled by pressing FCN ▶ (page 22).

Tx - Indicates that the transmitter is keyed (push-to-talk switch pressed).

Front Panel Keys

Most front panel keys have two or more functions. The function on the key is usually selected by simply pressing the key, and the function under the key is usually selected by first pressing another key such as the FCN key. In addition, some key functions may be available in the standard mode and others in the dial mode (see page 37). Also, all key functions except 0-9 can be assigned to an option switch and controlled by either (see page 35). Holding the key down causes repeating when applicable. The front panel keys operate as follows:

FCN (SCAN)

Standard Mode

FCN - Enables the alternate function of the next key that is pressed. This alternate function is active for 2 seconds or until another key is pressed.

FCN SCAN - Turns scanning on and off.

Dial Mode

FCN - Selects the alternate function of various keys as described in the following information.

SYS (RCL)

Standard Mode

SYS ▶ - Selects the next higher system.

SYS ◀ - Selects the next lower system.

SYS (xx) - Directly selects specified system.

FCN RCL - Momentarily displays the revert (selected) system if it is not already being displayed.

Dial Mode

RCL - Scrolls through the numbers programmed in memory.

FCN RCL (0-9) - Recalls the number stored in the specified memory location.

FCN RCL ◀ - Recalls the last number dialed from memory.

FCN RCL ▶ - Recalls the last number dialed.

GRP (CLR)

Standard Mode

The GRP key functions the same as “SYS” just described to change or display the selected group.

Dial Mode

CLR - Erases the last digit in the display.

FCN CLR - Erases the entire number in the display.

1 (HOME)

Standard Mode

FCN HOME - Selects the preprogrammed home system/group.

1 - Pressing this key with the PTT switch pressed transmits the “1” digit.

Dial Mode

1 - Dials the “1” digit.

2 (PHONE)

Standard Mode

FCN PHONE - Selects the dial mode and a telephone group in the current system.

2 - Pressing this key with the PTT switch pressed transmits the “2” digit.

Dial Mode

2 - Dials the “2” digit.

FCN PHONE - Exits the dial mode and sends the call termination code.

3 (DIAL)

Standard Mode

FCN DIAL - Selects the dial mode without changing the currently selected group.

3 - Pressing this key with the PTT switch pressed transmits the “3” digit.

Dial Mode

3 - Dials the “3” digit.

FCN DIAL - Exits the dial mode without sending the call termination code.

4 (PAGE)

Standard Mode

FCN PAGE - The page function is currently not available.

4 - Pressing this key with the PTT switch pressed transmits the “4” digit.

Dial Mode

4 - Dials the “4” digit.

5 (MENU)

Standard Mode

FCN MENU - Selects the menu mode.

5 - Pressing this key with the PTT switch pressed transmits the “5” digit.

Dial Mode

5 - Dials the “5” digit.

6 (SQL)

Standard Mode

FCN SQL - Selects the squelch adjust mode for conventional channels.

6 - Pressing this key with the PTT switch pressed transmits the “6” digit.

Dial Mode

6 - Dials the “6” digit.

7 (S.A/D)

Standard Mode

FCN S.A/D (System Add/Delete) - Changes the scan list status of the currently displayed system. The system is in the scan list and scanned normally if “S” is displayed when not scanning.

7 - Pressing this key with the PTT switch pressed transmits the “7” digit.

Dial Mode

7 - Dials the “7” digit.

8 (SEND)

Standard Mode

8 - Pressing this key with the PTT switch pressed transmits the “8” digit.

Dial Mode

8 - Dials the “8” digit.

FCN SEND - Automatically accesses the radio system and transmits the number in the display.

9 (G.A/D)

Standard Mode

FCN G.A/D (Group Add/Delete) - Changes the scan list status of the currently displayed group. The group is in the scan list and scanned normally if “G” is displayed when not scanning.

9 - Pressing this key with the PTT switch pressed transmits the “9” digit.

Dial Mode

9 - Dials the “9” digit.

0 (STR)

Standard Mode

FCN STR - Changes between the numeric and alpha display modes.

0 - Pressing this key with the PTT switch pressed transmits the “0” digit.

Dial Mode

0 - Dials the “0” digit.

FCN STR (0-9) - Stores the displayed number in the specified memory location.

✱ (◀)

Standard Mode

✱ - Pressing this key with the PTT switch pressed transmits the “✱” digit.

SYS ◀ - Selects the next lower system (see preceding “SYS” key description).

GRP ◀ - Selects the next lower group (see preceding “GRP” key description).

Dial Mode

✱ - Dials the “✱” digit.

FCN ◀ - Enters a pause when dialing a telephone number.

FCN RCL ◀ - Recalls the last number dialed from memory.

(▶)

Standard Mode

FCN ▶ - Enables and disables the keypad lock feature.

 # - Pressing this key with the PTT switch pressed transmits the “#” digit.

SYS ▶ - Selects the next higher system (see preceding “SYS” key description).

GRP ▶ - Selects the next higher group (see preceding “GRP” key description).

Dial Mode

 # - Dials the “#” digit.

FCN ▶ - Displays the overflow digits for a short time.

FCN RCL ▶ - Recalls the last number dialed.

BASIC OPERATION

Power-Up Sequence

When power is turned on using the top panel on-off/volume control, the backlight turns on, all segments and icons in the display are momentarily enabled, and the last seven digits of the transceiver part number are very briefly displayed. A beep then sounds (if tones are enabled) and the transceiver is operational.

Backlight Operation

The display and keypad backlight automatically turns on for 3 seconds whenever power is turned on or any key is pressed. If the Backlight menu parameter is available (see page 35), selecting “On” enables this operation and selecting “Off” disables the backlight entirely.

Setting Volume Levels

The relative volume level can be determined by noting the position of the index on the volume knob. You may also be able to enable a tone or background noise for use in setting the volume as follows:

- If key press tones are enabled, a short tone sounds whenever any key is pressed.

- If a conventional system is selected and the monitor option switch is programmed (see page 49), press this switch and if someone is talking on the channel, voice is heard. If no one is talking, the squelch can be adjusted as described on page 48 and noise is heard. It is not possible to manually unsquelch the transceiver when an LTR-Net or LTR system is selected.

System/Group Display Mode

Two system/group display modes can be selected. One is a numeric format and the other is an alpha tag format. To switch between these

modes, press FCN STR. Turning power off does not change the selected mode. These modes operate as follows:

Numeric Mode - The system and group numbers are displayed as “Sxx Gxx” and the group alpha tag is not displayed. For example, System 1 and Group 2 are displayed as follows. When only group scanning is occurring, the group number is replaced by dashes and the system number continues to be displayed (see page 40).

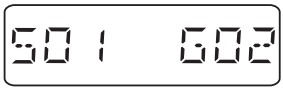

Numeric Display Mode

Alpha Tag Mode - The group alpha tag is displayed and the system and group numbers are not displayed. For example, the “CAR 220” system is displayed as follows. There is no special group scan indication when only group scanning is occurring.

Alpha Tag Display Mode

System and Group Select

Systems and groups are selected by the keypad SYS and GRP keys and one or more other keys as follows:

- To increase the selected system, press SYS and then ▶. Likewise, to increase the selected group, press GRP ▶. Holding the key down causes the function to repeat. After the highest system or group is selected, a tone sounds and wrap-around to the lowest system or group occurs.

- To decrease the selected system, press SYS and then ◀. Likewise, to decrease the selected group, press GRP ◀. Holding the key down causes the function to repeat. After the lowest system or group is

selected, a tone sounds and wrap-around to the highest system or group occurs.

- To directly select a system or group number, press SYS or GRP and then the number of the desired system or group. For example, to select Group 9, press GRP, 0, 9. A leading “0” must be entered for digits 1-9 for the selected system or group to change.

Keypad Disable

Occasionally, the front panel keys may be accidentally pressed, for example, if you carry the transceiver on your belt and it brushes against an object. To prevent this from happening, the front panel keys can be disabled. To disable and enable the keypad, press FCN ▶. The locked condition is indicated by the icon. If a key is pressed with the keypad locked, all that happens is “LOCKED” is displayed. The top and side panel controls remain functional with this feature selected. Turning the power off and then on again does not unlock the keypad.

Transceiver Lock

The transceiver can be locked to prevent unauthorized usage. To lock the transceiver, press FCN ◀ and “PASSWORD” is then displayed to indicate that a four-digit unlock password must be entered. This password can be any four-digit number except “0000”. The password must be re-entered to confirm it and the transceiver is then locked as indicated by “LOCKED” in the display. To unlock the transceiver, the four-digit password is re-entered.

When the transceiver is in the lock mode, calls cannot be received or transmitted. In addition, all controls except the on-off/volume control are disabled. The transceiver then remains unlocked until it is locked again by repeating this sequence.

Since the password is not preprogrammed, a different password can be entered each time this feature is used. If the password is forgotten, the transceiver must be returned to your system operator for reprogramming to make it operational again.

Low Battery Indication

When the battery voltage drops to the point where recharging is required, the icon is indicated in the bottom part of the display. In addition, a beep sounds when this indication initially appears and when the push-to-talk switch is released (if the key press tone is enabled). The battery should be recharged as soon as possible after this indication appears (see page 57).

Current settings of switches and other parameters are saved in memory during a low-battery condition, and low transmit power is automatically selected (indicated by "**L**" in display). The low-battery indication is cleared by turning power off and then on again.

Option Switches

This transceiver has three option switches that can be programmed by your system operator to control the monitor function and most functions that are selectable by the front panel keys (see table on page 34). The option switches are the push-button switch on the top panel and the switch immediately above and the switch immediately below the PTT switch on the side panel (see page 12).

LTR-Net, LTR, and Conventional Operation

Introduction

Each selectable system can be programmed for LTR-Net, LTR, or conventional operation. The type of operation that is programmed is determined by the radio equipment being used by your system operator. There are a few differences in operation that are described in the following information and also noted elsewhere in this manual as required.

LTR-Net and LTR Operation

The LTR-Net and LTR modes provide automatic channel selection and monitoring before transmitting. Special tones and display messages indicate busy and out-of-range conditions, and telephone calls can be placed almost as conveniently as with your home telephone.

Selecting a system selects a collection of up to 99 groups. Selecting one of these groups selects an ID code which determines the type of call (standard group, telephone, or special), the specific mobile or mobiles is being called (if applicable), and what calls are received. In addition, higher priority calls may be received (see page 45).

The LTR-Net operating mode provides the most operating features. Exclusive LTR-Net features include roaming and Unique ID and Directed Group calls. When operating in LTR-Net sites, calls may be made to mobiles in other sites as well as the current site. LTR-Net and LTR features are described starting on page 45.

Conventional Operation

In the conventional mode, selecting a system selects a conventional channel, and selecting a group selects the special Call Guard squelch coding (if used) and other unique parameters on that channel such as call indicator operation. The Call Guard coding determines the mobile or group of mobiles being called and also the mobiles from which calls are received (see “Call Guard Squelch” on page 51).

In the conventional mode, a busy condition is detected automatically if the Transmit Disable On Busy feature is used. Otherwise, it must be detected manually as described in “Monitoring Before Transmitting” on page 49. Unsuccessful access conditions cannot be detected with conventional signaling, so are not indicated by special tones or display messages. Refer to “Operation At Extended Range” on page 60 for information on how to determine if an out-of-range condition may exist.

GENERAL FEATURES

Bank Select

A bank is a collection of selectable systems that have been set up for a specific application. For example, one bank could be programmed for operation in Minneapolis and another for operation in Milwaukee. Up to sixteen banks can be programmed, and each bank is identified by a unique alpha tag.

Banks are selected by the BANK SEL menu parameter. In the menu mode select the “BANK SEL” parameter and then the desired bank (refer to page 35 for more menu mode information). If this menu parameter is not available, banks are not selectable.

Call Indicator

The call indicator is “**C**” in the upper part of the display (see following illustration). The purpose of this indication is to show that a call was received while you were away from the radio. Individual groups can be programmed for this feature and it then turns on when a call is received on one of those groups.

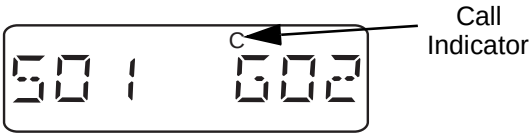

This indicator is turned off by pressing any button or cycling power. If scanning and the “Last Received” configuration is programmed (see “Transmitting In The Scan Mode” on page 43), the system and group of the last call are displayed. Otherwise, the currently selected system/group is displayed.

Home System/Group Select

To select the preprogrammed Home system/group, simply press the FCN HOME. The Home system/group programmed for the current bank is then displayed and it becomes the selected system/group. If no home system/group has been programmed, this function is not available.

Proceed (Clear-To-Talk) Tone

This is a short tone that sounds shortly after the PTT switch is pressed to indicate that the radio system has been accessed and speaking can begin. This tone can be programmed to be a single or distinctive (3-beep) tone. With encrypted calls, a special double beep sounds.

This tone always sounds with LTR-Net and LTR standard calls if tones are enabled by the TONES menu parameter (see “Tone Select” on page 27) or system operator programming. It can also be programmed to sound with conventional calls and/or LTR-Net and LTR auxiliary and telephone calls (first access only).

On LTR-Net and LTR systems, if the radio system is busy when making a call, the busy tone sounds instead of the proceed tone and “BUSY” is indicated in the display. If an access attempt is unsuccessful, such as because of an out-of-range condition, the intercept tone sounds and “NO ACESS” is indicated in the display. Refer to page 52 for more information on these conditions.

If the proceed tone is enabled on conventional systems and the Transmit Disable On Busy feature is used to automatically perform monitoring (see page 50), the proceed tone does not sound if the channel is busy. Otherwise, it sounds even if the channel is busy.

Receive-Only Groups

Any group can be programmed for monitoring only (transmitting disabled). If the PTT switch is pressed with one of these groups selected, the intercept tone sounds and “TX DISBL” is displayed.

Time-Out Timer

The time-out timer disables the transmitter if it is keyed continuously for longer than the programmed time. It can be programmed for 0.5 - 5.0 minutes or disabled entirely. If the transmitter is keyed continuously for longer than the programmed time, the transmitter is disabled, “TIMEOUT” is indicated in the display and the intercept tone sounds. The timer and tone are reset by releasing the PTT switch.

One use of the time-out timer feature is to prevent a repeater from being kept busy for an extended period by an accidentally keyed transmitter. It can also prevent possible damage to the transmitter caused by transmitting for an excessively long period.

Tone Select

If the TONES menu parameter is selectable, the tones that sound can be selected. Otherwise, the tones that sound are fixed by programming. The following choices are available. Refer to page 35 for more information on using the menu mode.

Silent - All tones are disabled.
Keys - Only the key press tones are enabled.
Alerts - All tones except the preceding key press tones are enabled.
All - Both the key press and alert tones are enabled.

STANDARD GROUP CALLS

General

Most calls you make are probably the standard group type described in this section. These calls are between you and another mobile or control station. The main difference between these calls and the other types is that no number needs to be dialed. The following procedure applies to all three types of operation (LTR-Net, LTR, and conventional).

Placing a Standard Group Call

1. Turn transceiver power on and set the volume as described starting on page 20. With conventional operation, also make sure that the squelch is properly set as described on page 48.

2. Select the system and group of the mobile being called as described on page 21.

3. If a conventional call is being placed, monitor the channel manually or automatically as described on page 49.

4. Press (and hold) the microphone PTT (push-to-talk) switch to talk and release it to listen. Operation with LTR-Net, LTR, and conventional calls is as follows:

LTR-Net and LTR Operation

- If tones are enabled, the proceed tone sounds shortly after the PTT switch is pressed if the radio system was successfully accessed (see page 26). If tones are not enabled, no tone sounds when the system is successfully accessed.

- If the radio system is busy, the busy tone sounds (see page 52) and “BUSY” is indicated in the display. Additional access attempts continue as long as the PTT switch is pressed.

- If the radio system could not be accessed because of an out-of-range condition or some other reason, the intercept tone sounds (see page 52) and “NO ACESS” is indicated in the display. The PTT switch must then be released and pressed again to make another access attempt.

- When responding, busy or no access conditions may also occur, the same as when placing a call because the radio system is re-accessed for each transmission with these calls.

Conventional Operation

- If the channel is busy and the Transmit Disable On Busy feature is programmed (see page 50), “DSBL BSY” is indicated in the display and the transmitter is disabled. Any channel activity is heard while the PTT switch is pressed.

- Otherwise, busy and out-of-range conditions are not indicated and speaking can begin when the PTT switch is pressed (if the channel is not busy). If the proceed tone is enabled on conventional systems, it indicates when speaking can begin but does not indicate that the channel is free or has been successfully accessed.

Receiving a Standard Group Call

1. Select or scan the system and group programmed for the call you want to receive (see page 40 for scan information).

2. When the message is received, the display changes to the system and group of the call. Press the PTT switch to talk and release it to listen. If scanning, a response may not automatically occur on the group of the call. Refer to “Transmitting In The Scan Mode” on page 43 for more information.

TELEPHONE CALLS

General

NOTE: Telephone calls can be placed and received only if that service is available to you and your transceiver has been programmed appropriately.

The telephone calling feature allows you to place and receive telephone calls using your transceiver. The following information describes how these calls are made with LTR-Net and LTR operation. If you can make telephone calls with conventional operation, the procedure may be somewhat different and your system operator may provide additional information. Proceed as follows:

Placing Telephone Calls

1. Turn transceiver power on and set the volume as described starting on page 20.

2. Select the dial mode and a telephone group as follows. When the dial mode is selected, the handset portion of the telephone icon is displayed, and then when a telephone group is selected, the base portion is displayed.

   - To select the dial mode and a preprogrammed telephone group, press FCN PHONE.

   - To select the dial mode without changing the selected group, press FCN DIAL. Then manually select a telephone group if required.

3. Dial the desired number using the keypad or recall it from memory by pressing FCN RCL and the location number (0-9). Refer to the dial mode description starting on page 37 for more information.

4. To send the telephone number, briefly press the PTT switch to access the system and then press FCN SND. Landside ringing (or busy) should then be heard. The following conditions may also occur:

- If the radio system is busy or could not be accessed, busy or no access conditions are indicated the same as described for standard group calls on page 28.

- With LTR-Net operation, a short tone sounds to indicate that the number was accepted by the system.

5. When the other party answers, press the PTT switch and respond. The PTT switch must be pressed to talk and released to listen (the same as with standard group calls).

6. When the call is finished, it should be terminated and the dial mode exited. The call is usually terminated by transmitting either the # or ✱ # characters.

   To automatically send these characters and exit the dial mode, press FCN PHONE. To exit the dial mode without sending these characters, press FCN DIAL. Termination is indicated by three beeps. Terminating the call in this manner prevents extra billing that may occur while the system automatically detects the end of the call.

Receiving a Telephone Call

1. Select or scan the system and group programmed for telephone calls. When a telephone group is selected, the base portion of the telephone icon is displayed.

2. When “ringing” is heard, press the PTT switch and respond. The PTT switch must be pressed to talk and released to listen the same as with standard calls.

3. When the call is finished, terminate it as described in step 6 of the preceding section.

Landside-Originate Telephone Calls

If telephone calls can be placed, it is usually possible to receive telephone calls from a landside telephone. With some radio systems, each mobile is assigned a unique telephone number so that it can be dialed directly. With others, the number of the radio system is dialed and then when a tone sounds, the number specifying the mobile being called is dialed. The mobile user hears “ringing” when a telephone call is received. Contact your system operator for the number to dial and other information on how to place these calls.

LTR-NET AUXILIARY CALLS

General

The LTR-Net auxiliary calls are Unique ID and Directed Group calls. Unique ID calls are placed to specific mobiles, and Directed Group calls are placed to specific talk groups. These calls can be made to other mobiles in your site or some other site that is part of your radio network.

As with telephone calls, a special number must be dialed to place these calls. The number dialed is 1-10 digits long, and is provided by your system operator. Other requirements to place these calls are they must be authorized on the radio system and your transceiver must be properly programmed. Refer to page 46 for more information on LTR-Net calls.

Placing LTR-Net Auxiliary Calls

1. Turn transceiver power on and set the volume as described starting on page 20.

2. Select the LTR-Net system and group programmed for auxiliary calls. When an auxiliary call group is selected, “UID” is indicated in the lower part of the display. If the group alpha tag is displayed, it may also indicate when one of these groups is selected.

3. Select the dial mode by pressing FCN DIAL. This mode is indicated when the handset portion ▬ of the telephone icon is displayed.

4. Dial the desired number which specifies the mobile or group of mobiles being called. If it has been previously stored, this number can be recalled from memory by pressing FCN RCL and the location number (0-9). Refer to the dial mode description starting on page 37 for more information.

5. To send the number, briefly press the PTT switch and then when the dial tones sounds, press FCN SND. Another tone then sounds to indicate that the call was accepted by the system. The call then proceeds as follows. If this tone does not sound, an unauthorized or incorrect number may have been dialed. If all system resources are busy, the call is placed in a queue as described in “Busy Queuing” on page 46.

   Unique ID Call - Ringing is heard to indicate that the other transceiver is being rung. If there is no answer, ringing automatically stops after several rings and the call is terminated. When the other party answers, respond as with a standard call.

   Directed Group Call - A second tone sounds to indicate that the path is complete and speaking should begin. No ringing occurs.

6. When the call is complete, it should be terminated the same as described in step 6 on page 31. Three beeps indicate that the call has been terminated.

Receiving Auxiliary Calls

To receive a Unique ID call, all that is required is that an LTR-Net system is selected that contains a group programmed for those calls. To receive a Directed Group call, the group of the call usually needs to be selected or scanned. A Unique ID call is indicated by a “ringing” tone similar to telephone calls, and a Directed Group call is indicated by the caller’s voice the same as with standard group calls.

The transceiver may be programmed so responses always occur on the last selected group. In this case, the group may need to be manually changed to respond to these calls (see “Transmitting In The Scan Mode” on page 43). Unique ID and Directed Group calls can also be placed from a landside telephone. The same numbers are dialed as when the call is mobile originated. Contact your system operator for more information on how to place these calls.

OPTION SWITCHES AND MENU MODE

Menu Mode and Option Switch Functions

Function	Menu Items	Option Switch	See Descrip. on Page
Backlight mode select	BACKLGHT		20
Bank select	BANK SEL		25
Monitor mode select		X	50
Roaming on-off [2]	ROAMING		47
Scan type select	SCN TYPE		40
Scan continue on-off	SCN CONT		43
Scan list save mode	SCN SAVE		42
Tone type select	TONES		27
Any keypad function		[3]	

NOTES:
1. Functions left blank are not available.
[2] Available with LTR-Net operation only.
[3] The option switches can be programmed for any of the functions selectable by the keypad keys except 0-9.

Option Switches

The push-button switch on the top panel (see page 11) and the switch immediately above and the switch immediately below the PTT switch on the side panel (see page 12) are programmable by your system operator. The functions which can be controlled by these switches are basically the functions that are selectable by the front panel keys plus monitor mode select (see “Option Switch” column of the preceding table). This provides a “quick select” for these functions. Some functions may be controlled by both the keypad and an option switch, and some or all option switches may be disabled.

Menu Mode

Introduction

The menu mode is selected by pressing FCN MENU. Functions which can be controlled by the menu mode are indicated by an entry in the “Menu Items” column of the preceding table. More information on each function can be found on the page indicated in this table. Parameters are not displayed in the menu mode if they are not used, in a fixed state, or controlled by only an option switch. Calls cannot be received or transmitted while the menu mode is selected.

Using Menu Mode

A flowchart of the menu mode is shown on the next page. Proceed as follows to select functions using the menu mode:

1. Select the menu mode by pressing FCN MENU. The first menu parameter is then displayed.

2. To scroll through the available menu parameters, press the ◀ (scroll down) and ▶ (scroll up) keys. Then to display and change the selected option for a parameter, proceed as follows:

- To display the selected option for a parameter, press the STR key.
- To change the selected option, press the ◀ and ▶ keys.
- To exit back to the parameter and save the selected option, press FCN STR.
- To exit back to the parameter without changing the selected option, press STR.

3. When the desired condition of each menu parameter is selected, exit the menu mode by pressing FCN MENU again. The menu mode is also automatically exited 2 seconds after a change is made or 8 seconds after no changes are made.

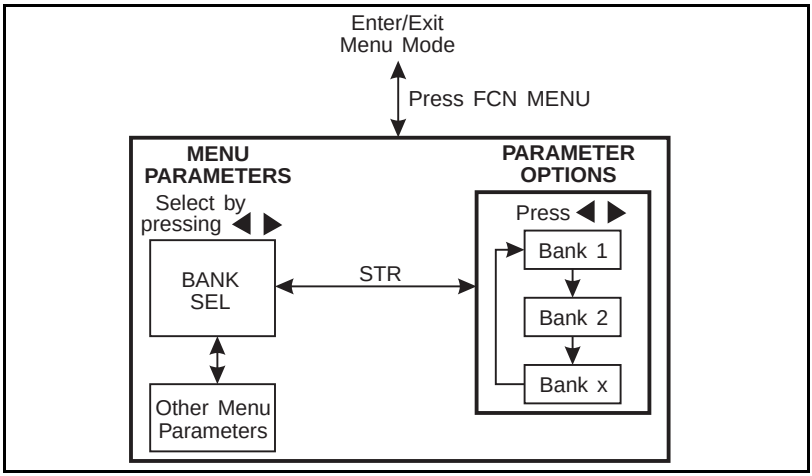

Menu Mode Flowchart

DIAL MODE

Introduction

When placing calls that require a number be dialed (telephone and auxiliary), using the dial mode allows the number to be dialed at any convenient rate, dialing errors to be corrected, and then the radio system to be automatically accessed and number transmitted when desired. The dial mode also allows up to ten 16-digit numbers to be stored in memory and later recalled.

When in the dial mode, the SYS and GRP keys become RCL (Recall) and CLR (Clear) keys. Therefore, the selected system and group cannot be changed when the dial mode is selected. The information which follows describes how the dial mode is used.

Selecting Dial Mode

Selecting Dial Mode and Telephone Group - To select the dial mode and a telephone group in the current system, press FCN PHONE. If there is more than one group programmed for telephone calls in the current system, the first high numbered telephone group is selected. If there is no telephone group or a conventional system is selected, “NO PHONE” is displayed and an error tone sounds.

Selecting Dial Mode Without Changing Selected Group - To select the dial mode without changing the currently selected group, press FCN DIAL. This method should be used when placing auxiliary calls because the auxiliary call group and not the telephone group must be selected.

The dial mode is indicated when the handset portion of the telephone icon is displayed. The base portion is displayed when a telephone group is selected, and “UID” is displayed when an auxiliary call group is selected.

Dialing a Number

Enter the desired number by pressing the 0-9, #, and ✱ keys. Other dialing functions are as follows:

- Only the last 8 digits dialed are displayed. To momentarily display the upper 8 digits, press FCN ▶.
- To erase the last digit, press the CLR key (hold it down to repeat). To erase the entire number, press FCN CLR.
- To enter a pause, press FCN ◀ (each pause equals one character).

Sending the Number

Briefly press the PTT switch to access the radio system. Then to send the number in the display, press FCN SND. The keypad remains active while in a conversation to allow additional numbers to be dialed. Simply press the PTT switch and dial the number. The number in the display does not change when a number is dialed in this manner. If you want to save the number in the display (see following information), make sure you do so before the dial mode is exited.

Storing Numbers in Memory

Up to ten 16-digit numbers can be stored in memory and later recalled. Proceed as follows to store a number:

1. Enter the number as described in the preceding “Dialing a Number” section.
2. To store the number, press FCN STR and the memory location from 0-9.
3. If there is already a number in the selected location, it is replaced by the new number. To clear a memory location, simply store a blank display.

NOTE: The ✱ character is stored and sent normally (no pause occurs), and the # character should not be stored because it may terminate the call when it is sent.

Recalling Numbers From Memory

From Specific Location - FCN RCL 0-9 (location number)

Stored in Next Location - RCL (hold down to repeat). If a number is already displayed, the number in the next higher location is indicated; if display is blank, the number in location 1 is indicated first.

Last Number Dialed by Recalling from Memory - FCN RCL ◀

Last Number Dialed - FCN RCL ▶

Exiting Dial Mode

Without Sending Call Termination Characters - To exit the dial mode without sending the call termination characters, press FCN DIAL.

Sending Call Termination Characters - To exit the dial mode and send the characters which automatically terminate the call, press FCN PHONE. Terminating a call in this manner prevents any additional billing for the time required to automatically detect the end of a call.

Placing Calls Without Selecting Dial Mode

Telephone and Auxiliary calls can also be placed without selecting the dial mode by using the procedure which follows:

1. Access the radio system by briefly pressing the PTT switch.

2. When a dial tone is heard, dial the desired number while pressing the PTT switch. If too much time elapses between digits, the call is automatically terminated.

NOTE: When receiving telephone or auxiliary calls, the selection of the dial mode is optional because it does not enhance operation.

SYSTEM AND GROUP SCANNING

General

Introduction

The scan feature monitors, in sequence, the systems and/or groups in the scan list. When a message is detected that the transceiver is programmed to receive, scanning stops and the message is received. Shortly after the message is complete, scanning resumes (unless it has been disabled). System and group scanning or group scanning only may be used (see next page), and the operation of each type is as follows. Refer to page 23 for more information on systems and groups.

System Scanning - Detects calls on all systems in the system scan list. If system scanning is not used, calls are detected on only the currently selected system.

Group Scanning - Detects calls on all groups in the group scan list. These groups are from the selected system and also from scanned systems if system scanning. If group scanning is not used, calls are detected on only the selected group. In addition, calls may be detected on higher priority LTR-Net and LTR groups (see “Priority Calls” on page 45).

Scan On-Off

System and/or group scanning are turned on and off by pressing FCN SCAN. When either type of scanning is enabled, Z is indicated in the display (see following illustration). Then when group scanning is actually occurring, dashes are displayed instead of a group number (if the numeric display mode described on page 20 is selected). Group scanning is not indicated if the alpha display mode is selected, and system scanning is never indicated. The monitor mode must be disabled for scanning to occur (see page 49).

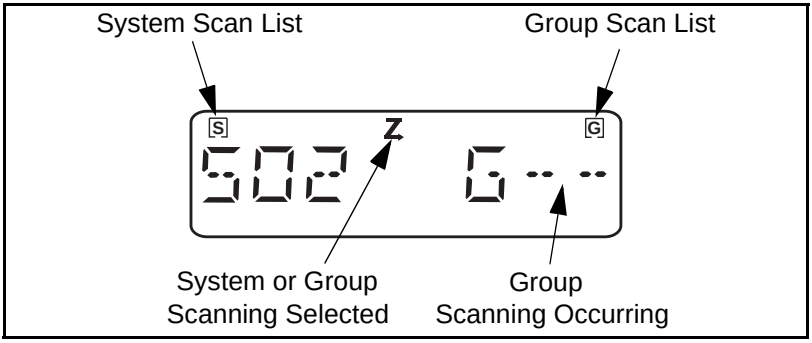

Scan Types

The type of scanning selected is determined by the menu mode SCN TYPE parameter (see page 35). If it is not selectable, the scan type is fixed by system operator programming. The available scan types are as follows.

SYSTEMS - Both system and group
GROUPS - Group scanning only
OFF - Both types disabled (scanning not selectable)

If the SCN TYPE menu parameter is disabled, the scan type is fixed by programming. The selected system and group can be changed while scanning using the SYS and GRP keys in the normal manner. Scanning resumes shortly after the change is made.

When a call is received in the scan mode, the display changes to the system and group of the call. Programming determines if this change is temporary or permanent, and if a response occurs on the system/group of the call or the selected system/group. Refer to “Transmitting In The Scan Mode” on page 43 for more information.

LTR-Net Mode Scanning

When system scanning with an LTR-Net system selected and roaming disabled, only the LTR-Net systems in the scan list that access the site of the selected system are scanned (any LTR and conventional

systems are not scanned). If roaming is enabled, registration on other sites occurs normally and scanning of LTR-Net systems occurs as just described.

However, if the current LTR-Net site is lost and no other LTR-Net site can be located, the LTR and conventional systems in the scan list are also scanned. Searching for an LTR-Net site continues and if one is again detected, registration on that site occurs and the LTR and conventional systems are no longer scanned. This operation can provide uninterrupted operation in areas which have not been converted to LTR-Net operation.

LTR and Conventional Mode Scanning

When an LTR or conventional system is selected with system scanning enabled and roaming disabled, scanning is sequential through only the LTR and conventional systems in the scan list (LTR-Net systems are not scanned). If roaming is enabled, only LTR-Net systems or all three system types may be scanned as described in the preceding LTR-Net description.

Scan List Programming

General

NOTE: The selected (displayed) system and group are always scanned even if they have been deleted from the scan list.

NOTE: Deleting LTR-Net systems from the scan list also deletes them from locality searching when roaming, even if scanning is disabled.

The scan list status of the displayed system is changed by pressing FCN S.A/D, and the status of the displayed group is changed by pressing FCN G.A/D. The displayed system is in the scan list and scanned normally when S is displayed, and the displayed group is scanned when G is displayed (see preceding illustration). Deleting a system only temporarily deletes the groups associated with that system because when a system is added back into the scan list, the original group scan list is again active.

Systems and groups can be deleted from the scan list in the normal manner while listening to a message on the system or group by simply pressing the S.A/D or G.A/D key. Scanning resumes shortly after the system or group is deleted.

Saving Scan List

If the menu mode SCN SAVE parameter is available (see page 35), you can select if scan list changes are saved. If “On” is selected, changes are saved as they are made and the scan list does not change when power is turned off. Conversely, if “Off” is selected, they are not saved and the default status of all systems and groups is reselected when power is turned on. If the menu SCN SAVE parameter is not selectable, the scan list save mode is fixed in one of these states.

Scan Delay and Continue Timers

When a message is received or transmitted while scanning, there is a short delay before scanning resumes. The delay after receiving a call prevents another message from being received before a response can be made. Likewise, the delay after transmitting a call ensures that you hear a response to your call instead of another message occurring on some other system or group. Note that scanning does not resume if it has been disabled, such as by selecting the monitor mode.

There is also a scan continue timer that may be programmed. This timer controls the maximum time that a call is received before scanning resumes. Times up to 60 seconds can be programmed. This prevents scanning from being delayed for long periods by lengthy calls. If the menu SCN CONT parameter is selectable (see page 35), this feature can be turned on and off.

Transmitting In The Scan Mode

General

When messages are received while scanning, programming determines if the selected system/group does not change, changes permanently

to the new system/group, or changes temporarily. This in turn affects the system/group on which responses occur. The display always indicates the system/group on which a call is received, but this may not be the system/group on which a response occurs. The three programmable configurations operate as follows:

Last Selected - Transmissions always occur on the system/group that was selected manually by the SYS and GRP keys or automatically by roaming. Therefore, to respond to a message that is not on the selected system/group, the selected system/group must be changed using one of these methods:

- Select the system/group of the call manually using the SYS and GRP keys.

- Before scanning resumes, exit the scan mode by pressing FCN SCAN. The system/group of the call then becomes the selected system/group and it is not necessary to change it manually.

Last Received - The selected system/group changes to the system/group of a call. Therefore, you can always respond to a call without having to manually change the system/group. To return to the previously selected system/group, it must be manually selected using the SYS and GRP keys.

Temporary Last Received - The system/group changes to the system/group of a call for only the duration of the scan delay period (see page 43). Then when the delay expires and scanning resumes (if it is not disabled), the selected system/group is again displayed. Therefore, you can respond to a call without changing the selected system/group as long as you do so before scanning resumes.

LTR-NET AND LTR FEATURES

Transmit Inhibit

The Transmit Inhibit feature prevents the transmitter from keying if the mobile you are calling is busy with another call. When the transmitter is disabled by this feature, the intercept tone sounds and “TX INHIB” is displayed (see following illustration). To make another call attempt, the PTT switch must be released and pressed again. However, you may want to wait a few seconds before making another attempt because a timer must time out before another attempt will be successful. A similar Transmit Disable On Busy feature is available on conventional systems (see page 50).

Priority Calls

Each LTR-Net and LTR group is programmed with a receive priority number. If a call is detected on a group in the group scan list that has a higher priority than the selected group, it is received (even if scanning is not enabled). If another call is in progress when the higher priority call is detected, the current call is immediately dropped. Some groups, such as those used to make telephone calls, may be programmed as not interruptible to prevent other calls from interrupting a call in progress.

The system/group of the priority call is displayed while it is received. The programming described on page 43 determines if the change is temporary or permanent and if a response occurs on the last selected or received system/group.

LTR-NET FEATURES

NOTE: Other LTR-Net features are described starting on page 45.

LTR-Net Standard Calls

Standard group calls are between two mobiles or between a mobile and a control station. To place these calls in the LTR-Net or LTR mode, simply select the desired group and press the PTT switch (no number is dialed) as described starting on page 27.

LTR-Net Special Calls

The LTR-Net Special calls are as follows:

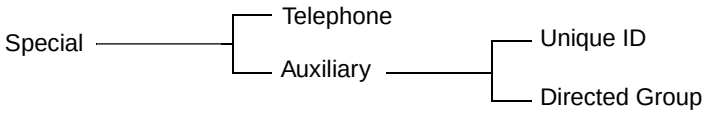

Telephone Calls - These calls allow you to place and receive telephone calls using your transceiver. They are described starting on page 30.

Auxiliary Calls - As shown in the preceding illustration, these calls include Unique ID and Directed Group calls. Unique ID calls are to specific mobiles, and Directed Group calls are to specific talk groups. Refer to page 32 for information on placing and receiving Auxiliary calls.

Busy Queuing

If system resources are not available when placing special calls, queuing may be provided by the radio system. Standard group calls are not queued. When a call is placed in a queue, a voice message informs you that this has occurred. Then when resources become available, the call is automatically placed and the normal ringing or other tones are heard if applicable. If the call cannot be placed in the allotted time, it is terminated and another message informs you that this has occurred.

Roaming

LTR-Net radio localities (sites) can be linked together to provide wide area coverage. Calls can then be automatically routed to your current location as you travel from locality to locality. Both standard group and special calls may be routed in this manner. If your transceiver is programmed for roaming, this feature is utilized as follows:

1. Enable roaming using the ROAMING menu parameter (see page 34) if available. If the menu parameter is not available, roaming is fixed in the on or off mode by programming.

2. If scanning is disabled, an LTR-Net system must be selected. If system scanning is enabled, any system can be selected if the LTR-Net systems are in the system scan list (see page 42).

When roaming is enabled as just described and the signal from the current locality becomes weak, the transceiver automatically begins searching for another locality. While searching is occurring, “LCL SRCH” is displayed as shown below. Then when a new locality is located, registration occurs and “LCL SRCH” is no longer displayed. The displayed system is then the next LTR-Net system programmed with a different locality that could be accessed, and the displayed group is usually the group that was displayed before roaming occurred.

NOTE: Deleting LTR-Net systems from the scan list also deletes them from locality search when roaming, even if scanning is disabled. Therefore, make sure none have been inadvertently deleted (see page 42).

LTR FEATURES

NOTE: Other LTR features are described starting on page 45.

Standard Group Calls

Standard group calls are between two mobiles or between a mobile and a control station. To place these calls in the LTR or LTR-Net mode, simply select the desired group and press the PTT switch (no number is dialed). The procedure for placing and receiving these calls is described starting on page 27.

Telephone Calls

Telephone calls allow you to place and receive calls over the public telephone system using your transceiver. LTR and LTR-Net telephone calls are described starting on page 30.

CONVENTIONAL FEATURES

Squelch Adjust

This function sets the squelch level used for conventional calls. Since the squelch level for LTR-Net and LTR calls is preset and cannot be changed, this adjustment needs to be made only if you make conventional calls (refer to page 23 for more information on operating modes). Proceed as follows:

1. Select a conventional system and a group that is not busy. If the selected channel is programmed for Call Guard squelch, press the Monitor option switch (if programmed) to enable monitoring (see page 49).

2. Press FCN SQL to select the squelch adjust mode. The currently selected squelch level is then indicated by “SQ xxx” in the display.

3. Press the ◀ key until receiver noise is heard and then press ▶ until the noise just mutes. To decrease or increase the selected level in steps of 10 (or select the minimum or maximum level if this is not possible), press FCN ◀ or FCN ▶, respectively.

   NOTE: Slight readjustment may be required if weak messages are not heard or unsquelching occurs when no messages are present.

4. To exit this mode, press the FCN SQL again. Exiting also occurs automatically after 2 seconds of no activity.

5. If both narrow and wide band channels are used, perform this adjustment for each type because separate settings are maintained.

Monitoring Before Transmitting

General

Regulations require that conventional channels (groups) be monitored before transmitting to make sure that they are not being used by someone else. If you were to transmit when someone else is talking, you would probably disrupt their conversation. Proceed as follows to automatically or manually monitor conventional channels. In the LTR-Net and LTR modes, monitoring is always performed automatically.

Automatic Channel Monitoring

If the selected group is programmed with the Transmit Disable On Busy feature (see page 50), monitoring is performed automatically. If not, it must be monitored manually using one of the methods which follow.

Busy Indicator

With scanning disabled and the squelch properly adjusted (see page 48), note if “BUSY” is indicated in the display (see following illustration). If it is, a signal is being detected on the selected group (channel) and you should not transmit a message until it turns off.

Monitor Mode

There may be times when the Busy indication is displayed even though no one is using the channel. Monitoring should then be performed using the monitor mode. This mode is enabled and disabled by pressing the Monitor option switch (see page 35), and is indicated by ◀ in the display as shown in the following illustration. When the monitor mode is selected, both Call Guard squelch (see page 51) and scanning are disabled so that any activity on the group is heard.

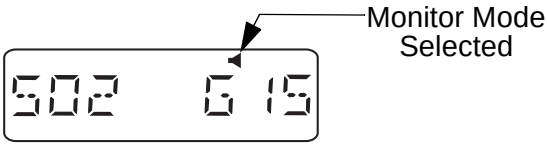

A conventional system must be selected to enable monitoring. If the Monitor option switch is pressed with an LTR-Net or LTR system selected, scanning halts but monitoring is not enabled. If the monitor option switch is not programmed, the monitor mode is not selectable and monitoring is performed automatically as follows.

Transmit Disable On Busy

The Transmit Disable On Busy feature automatically disables the transmitter if the selected group (channel) is busy and it has not been monitored when the PTT switch is pressed. When the transmitter is disabled by this feature, the busy tone sounds briefly and “DSBL BSY” is indicated in the display as follows:

While the PTT switch is pressed, the receiver is enabled so that activity on the channel can be monitored. The PTT switch must be released and then pressed again to make another call attempt. Occasionally, a busy condition may be detected even though no one is talking. To key the transmitter in this case, release the PTT switch and then immediately press it again.

There is also a programmable option with this feature to allow transmitting with a busy channel if the correct Call Guard signal is detected. The Transmit Disable On Busy feature is enabled or disabled on each conventional group by system operator programming. If this feature is disabled, the transmitter will key even if the group is busy.

Talk-Around

Normally, all transmissions go through a repeater which usually increases range because the repeater transmits at a higher power level and has a higher antenna. However, this means that if you are out of radio range of the repeater, you cannot talk to anyone even if the mobile you are calling is only a short distance away. To allow communication if this occurs, talk-around groups can be programmed which enable direct mobile-to-mobile communication without going through a repeater.

Talk-around is then automatically enabled by selecting one of these groups. There is no special talk-around option switch or indicator. However, the group alpha tag on the lower line of the display may be used to indicate groups programmed for this feature. Talk-around is not available on LTR-Net and LTR systems.

Call Guard Squelch

The Call Guard squelch feature eliminates distracting messages intended for others using the channel. This is done by using a subaudible tone or digital code to control the squelch. This tone or code is unique to a user or a group on that channel. It is transmitted with the voice signal but is not heard because it is in the subaudible range and attenuated by a filter. Call Guard squelch can be programmed on each conventional group. LTR-Net and LTR operation uses ID codes to perform a similar function.

MISCELLANEOUS

Supervisory Tones

The following tones are heard at various times when operating this transceiver. Some or all of these tones may be disabled by the TONES menu parameter or programming (see “Tone Select” on page 27).

Busy Tone

This tone is similar to the standard telephone busy tone, and it indicates that the radio system is currently busy. The display also indicates “BUSY” while this tone is sounding. Repeated access attempts are made while the PTT switch is pressed with this tone sounding. Therefore, it is not necessary to release the PTT switch to access the system. This tone sounds only with LTR-Net and LTR calls.

Intercept Tone

This is a siren-like tone (alternating high and low tones) which indicates the following no access and error conditions:

- No Access - If this tone sounds shortly after pressing the PTT switch and “NO ACESS” is displayed, the radio system could not be accessed, perhaps because of an out-of-range condition (see “Operation At Extended Range” on page 60). Once this tone sounds, no more access attempts are made until the PTT switch is released and then pressed again. This condition is indicated only with LTR-Net and LTR calls.

- Time-Out Timer - If this tone sounds after the transmitter has been keyed for an extended period and “TIMEOUT” is displayed, the transmitter has been disabled by the Time-Out Timer feature (see page 27).

- Transmit Inhibit - If this tone sounds as soon as the PTT switch is pressed with an LTR-Net or LTR system selected and “TX INHIB”

is displayed, the transmitter has been disabled by the Transmit Inhibit feature (see page 45).

- Receive-Only Group - If this tone sounds when the push-to-talk switch is pressed and “TX DISBL” is displayed, the group is receive-only (see page 26).

Proceed (Clear-To-Talk) Tone - This is a short single or double tone which sounds after the push-to-talk switch is pressed to indicate when talking can begin (see page 26).

Key Press Tone - This is a short tone that indicates when an option switch is pressed.

Wrap-Around Tone - This is a two-pitch tone that indicates that the highest or lowest channel was displayed and that wrap-around has occurred.

Error Tone - This is a two-pitch tone that indicates that an error condition has occurred.

LTR-Net Special Call Tones

The following tones are generated by the LTR-Net equipment and are heard when making a telephone, unique ID, or directed group special call on an LTR-Net system.

Confirmation Tone - This is a short tone that sounds when the number just dialed has been accepted by the system.

Call Proceed Tone - With LTR-Net directed group calls (see page 32), ringing does not occur after the number is dialed. Instead, another short tone sounds after the confirmation tone to indicate that the audio path is complete and speaking can begin.

End Call Tone - Three beeps which indicate when the end of the call has been detected by the system.

Proceed Dialing Tone - When placing a landside-to-mobile telephone call (see page 32), the landside caller may enter a special number which specifies the mobile being called. This tone indicates when that number should be dialed.

LTR Telephone Call Tones

The following tones are generated by LTR interconnect equipment and are heard when making LTR telephone calls.

Reorder Tone - Three beeps which indicate that the call has been terminated by the system.

Return Time Warning Tone - Two beeps which indicate that you have not transmitted for an extended period. If you do not transmit within 5 seconds, the call is automatically terminated by the system. The time between transmissions is one of the parameters used by the system to detect the end of a call when the # character is not sent.

Conversation Time-Out Tone - Calls are limited to a certain length by the system. Thirty seconds before this time is reached, a “tick” begins sounding each second. When the 30-second time expires, the call is automatically terminated by the system.

Turn-Around Tone - This is a single beep which may be used to indicate to the landside party when to respond to your transmission. It sounds when you release the PTT switch, and you may partially hear this tone.

Proceed Tone - This tone consists of two beeps and it tells the landside caller when to enter the five-digit number specifying the mobile being called. Dialing of this number must be started within 5 sec. of hearing this tone, and a tone-type telephone must be used.

Display Messages

The following messages appear in the display to indicate various operating modes and error conditions.

BUSY - Indicates that the LTR-Net or LTR radio system is currently busy (see “Busy Tone” on page 52).

CALL SVC - Indicates that the transceiver is inoperative. Contact your system operator for service.

DSBL BSY - Indicates that the transmitter is disabled by the conventional Transmit Disable On Busy feature (see page 50). It also indicates that the transmitter was keyed while receiving an LTR-Net or LTR call.

FCN - Indicates that the function select mode is selected by the FCN option switch (see page 15).

LCL SRCH - Indicates that the transceiver is currently searching for a new locality (site) on which to register (see page 47).

Model - The last seven digits of the transceiver part number are indicated very briefly in the display when transceiver power is turned on. This number indicates such things as frequency band, power output, and tier of the transceiver. The eighth digit is reserved and always “0”.

NO ACESS - Indicates that the radio system could not be accessed, perhaps because of an out-of-range condition. Refer to “Operation At Extended Range” on page 60 for more information.

NO PHONE - Indicates that there is no telephone group programmed in the current system when the dial mode is selected by pressing FCN PHONE (see page 37).

NOT AUTH - Indicates that an attempt was made to register on a site where service was not authorized (see page 47).

NOT CONV - Indicates that an attempt was made to enable a conventional mode feature on an LTR-Net or LTR system.

NOT LNET - Indicates that an attempt was made to enable an LTR-Net mode feature on an LTR or conventional system.

OUT-LOCK - Indicates that the synthesizer is unlocked. Refer to “Transceiver Service” on page 61 for more information.

PROG ERR - Indicates an EEPROM read error. Refer to “Transceiver Service” on page 61 for more information.

SLEEPING - Indicates that the transceiver has been temporarily disabled by the system operator. It will be automatically enabled again when operation can be resumed.

SQUELCH - Indicates that the conventional squelch adjust mode is selected (see page 48).

TIMEOUT - Indicates that the transmitter has been disabled by the Time-Out Timer (see page 27).

TX DISBL - Indicates that the transmitter has been disabled because the selected group is receive-only (see page 26).

TX INHIB - Indicates that the transmitter has been disabled by the Transmit Inhibit feature (see page 45).

Menu Mode Messages

The following messages are displayed in the menu mode that is described starting on page 34. The enabled or “yes” condition is indicated by “ON”, and the disabled or “no” condition by “OFF”.

BACKLGHT - Backlight enable/disable
- ON or OFF

BANK SEL - Bank select
- Bank alpha tag

ROAMING - LTR-Net roaming on-off
- ON or OFF

SCN CONT - Scan continue on-off
- ON or OFF

SCN SAVE - Scan list save
- ON = save, OFF = not saved

SCN TYPE - Selects type of scanning
- SYSTEM - Both system and group
- GROUPS - Group scanning only
- OFF - All scanning disabled

S/G DISPL - System/group display mode
- ALPHA
- NUMERIC

TONES - Beep tones select
- SILENT - All tones disabled
- KEYS - Only Select switch and key press tones sound
- ALERTS - All tones sound except preceding Key Beeps sound
- ALL - All the preceding tones sound

Rechargeable Battery Pack

WARNING

Do not dispose of the battery pack in fire because it may explode. The battery pack contains nickel metal-hydride (NiMH) cells which must be disposed of in accordance with local regulations. Do not short the terminals because the battery may become very hot.

Battery Life

With proper care, the nickel metal-hydride (NiMH) battery pack used by this transceiver should provide excellent service. When the pack no longer holds a charge or provides only a very short operating time, it must be replaced with a new unit.

Typical operating time before recharging is required is 7.3 hours. This assumes that the transceiver is transmitting at high power 5% of the time, receiving and producing audio 5% of the time, and in the standby mode (receive with audio muted) 90% of the time. If the low-power mode is selected or different times are spent in these modes, operating time varies accordingly. The charge of the battery and ambient temperature also affect operating time.

NOTE: Be sure to turn transceiver power off before removing the battery pack. Failure to do so may result in current settings not being saved in memory.

Recharging

Recharging is required when the − + icon is displayed as described on page 23. To remove the battery pack from the transceiver for recharging (see next section), press the spring-loaded release button on the bottom and slide the battery off. A new battery pack must be charged before use.

Battery Care

One cause of shortened battery life is repeated deep discharge. Therefore, it is recommended that the battery be recharged as soon as practical after the low-battery indication appears (see preceding information). Do not continue using the transceiver until the battery is completely discharged. Another cause of reduced battery life is operation at temperature extremes. It is also good practice not to regularly leave a pack in the charger for extended periods after it is completely charged.

It is possible that the pack could develop a characteristic called “memory” although these packs are designed to minimize that problem. When a pack has this problem, it acts as if it is totally discharged even though it has greater capacity. This can be caused by discharging a pack only slightly before recharging, charging at too high a temperature, or extended storage. If a pack develops this problem, it can usually be corrected by performing three discharge/charge cycles.

Battery Charger Operation

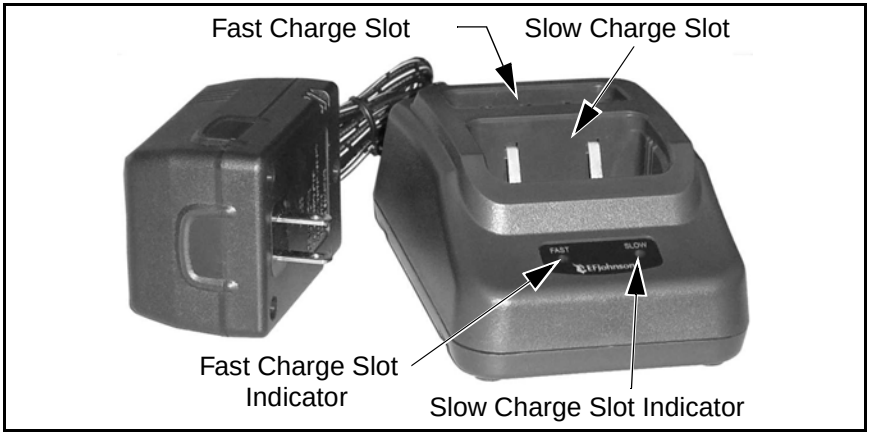

The charger shown above has two slots in which to place a battery. The back slot is for fast charging and the front slot is for slow charging. Only the battery can be inserted in the fast charge slot and the entire transceiver can be inserted in the slow charge slot if desired. Batteries can be charged in both slots at the same time. The operation of the two indicators is described in Table 1.

Fast Charging - When a battery is placed in the fast charge slot, fast charging begins as indicated by a steady red indicator. Then when the battery is nearly fully charged, the charger switches to a trickle rate (20-40 mA) and the indicator turns green. It continues at this rate until the battery is removed from the charger. The temperature must be 0 to +45° C (+32 to +113°F) for rapid charging to occur. Approximate charge time in this slot for a fully discharged battery is 1.5 hours.

NOTE: Occasionally, a fully charged condition may be falsely detected and the trickle mode entered after only a few minutes of rapid charging. To resume normal rapid charging if this occurs, momentarily take the battery out of the slot.

Slow Charging - Batteries placed in the front slot are always charged at the slow rate (100-120 mA). The slow charge indicator turns green when

charging is occurring, and charging continues at the slow rate until the battery is removed from the charger. Approximate charge time in this slot for a fully discharged battery is 20 hours (with transceiver power off if applicable). If transceiver power is on, this slot basically maintains the charge of the battery.

Table 1 Charger Indicators

Indication	Indicator	
	Fast Charge	Slow Charge
Flashing Red [1]	Checking battery condition	N/A
Constant Red	Rapid charge mode	N/A
Constant Green	Trickle charge mode	Slow charge mode
Off [2]	No charging occurring	No charging occurring
[1] If condition persists, battery temperature is not within required range. If temperature is as described above, battery may be defective. [2] Possible causes are poor contact (clean the terminals) or defective battery.		

Speaking Into Microphone

For best results, hold the speaker grille about 1-2 inches from your mouth and speak at a normal conversational level. Do not shout since it distorts your voice and does not increase range. Make sure that the PTT (push-to-talk) switch is pressed before you begin to speak and released as soon as the message is complete.

Operation At Extended Range

When approaching the limits of radio range, the other party may not be able to hear your transmissions and there may be an increase in background noise when messages are received.

Even though you can hear messages, you may still be out of radio range. The reason for this is that the signal being received is normally transmitted by a repeater which usually has a much higher power level than is produced by your transmitter. Communication may be improved by moving to higher ground or away from shielding objects such as tall buildings or hills.

Licensing

A government license is usually required to operate this transceiver on the air. Your system operator will normally handle the licensing requirements.

Transceiver Service

If your transceiver is not operating properly, “OUT-LOCK”, “PROG ERR”, “SLEEPING”, or “CALL SVC” may be displayed. It may be possible to clear the first two conditions by turning power off and then on again to reset the control logic. Also, make sure that the controls are properly set and the battery is fully charged. If the transceiver still does not operate properly, return it to your system operator for service.

The “SLEEPING” message indicates the transceiver is temporarily disabled as described on page 56. If the CALL SVC message is displayed, the transceiver must be returned to your system operator for service.

NOTE: There are no user serviceable components in the transceiver. Altering internal adjustments can cause illegal emissions, void the warranty, and result in improper operation that can seriously damage the transceiver.

INDEX

A
Accessory Connector 12
Alpha Tag Display Mode 21
Alphanumeric Display 13
Antenna Jack 12
Auxiliary Call 46
  Placing 32
  Receiving 33

B
Backlight 20
Battery Charger 59
Battery Pack 57
Battery Release Button 12
Busy Queuing 46
Busy Tone 52

C
Call Guard Squelch 51
Call Indicator 13, 25
Charge Time 59
Charger Indicators 60
Clear-to-Talk Tone 26
CLR Key 16

Controls
On-Off/Volume 11
Option Switch 12
PTT Switch 12
Top Panel 11
Conventional Mode 24
Conventional Mode Scanning 42

D
DIAL Key 17
Dial Mode 37
Exiting 39
Selecting 37
Dialing a Number 38
Directed Group Call 32, 46
Disabling Keypad 22
Display 13
Display Messages 54
Display Mode
Alpha Tag 21
Numeric 21

F
Fast Charge 59
FCN Key 15
Features
Conventional 10
General 10
LTR 10
LTR-Net 10
Front Panel Keys 15

G
G.A/D Key 18
Group Call 27, 46
Group Scanning 40
GRP Key 16

H
HOME Key 16
Home System/Group Select 26

I
Indicator
Auxiliary Call Group 14
Busy 14, 49
Call 13, 25
Directed Group Call 14
Group Scan List 14
Keypad Lock 14
Low Battery 14
Low Power 13
Monitor Mode 14
Priority 14
Scan 13
System Scan List 13
Telephone Group 13
Transmit 14
Unique ID Call Group 14
Intercept Tone 52

L
Landside-Originate Telephone Call 32
Licensing 61
Low Battery 23
LTR Mode 23
LTR Mode Scanning 42
LTR-Net Mode 24
LTR-Net Mode Scanning 41

M
MENU Key 17
Menu Mode 35
Backlight Mode 20
Bank Select 25
Display Mode 20
Messages 56
Roam Select 47
Scan Continue 43
Scan List Save 43
Scan Type 41
Tone Select 26, 27
Messages 54
Mobile-to-Mobile Call 27
Monitor Mode 50
Monitoring Before Transmitting 49

N
Numeric Display Mode 21

O
On-Off/Volume Control 11
Operating Modes 23
Operation at Extended Range 60
Option Switch 12, 23, 35
  Monitor Mode Select 50

P
PAGE Key 17
PHONE Key 16
Power-Up Sequence 20
Priority Calls 45
Proceed Tone 26
Push-to-Talk Switch 12

Q
Quick Reference Guide 9

R
RCL Key 16
Recalling a Number 39
Receive-Only Groups 26
Rechargeable Battery Pack 57
Roaming 47

S
S.A/D Key 18
Safety Information 4
Scan Delay and Continue Timers 43
SCAN key 15
Scan List
  Programming 42
  Saving 43
Scan Mode 40
  Transmitting 43
Scan Types 41
Selecting System/Group 21
SEND Key 18
Sending a Number 38
Service 61
Slow Charge 59
Speaking Into Microphone 60
Special Calls 46
SQL Key 17
Squelch Adjust 48
Standard Group Call 46, 48
  Placing 27
  Receiving 29
Storing a Number 38
STR Key 18
Supervisory Tones 52
SYS Key 16
System and Group Select 21
System Scanning 40

T
Talk-Around 51
Telephone Call 48
  Landside Originate 32
  Placing 30
  Receiving 31
Telephone Calls 46
Time-Out Timer 27
Tone Select 27
Tones
  LTR Telephone Call 54
  LTR-Net Special Call 53
  Supervisory 52
Transmit Disable On Busy 50
Transmit Inhibit 45

U
Unique ID Call 32, 46

V
Volume Level Adjust 20

W
Warranty 3

002-7200-600

EFJohnson®

Part Number 002-7200-600
9-01 hph Printed in U.S.A.