CUSTOM VEHICLE HEADRESTS

with 7” or 8” Slim Style LED LCD Monitors
with Built-in DVD Player for Rear Seat Entertainment
With FM Transmitter

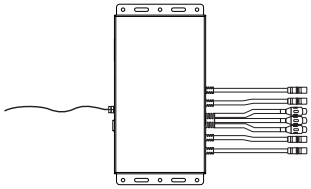

FM Transmtter

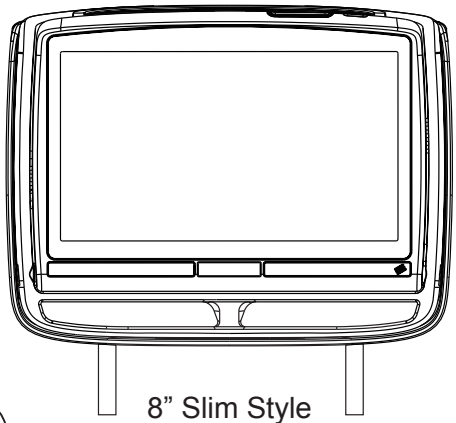

8” Slim Style
LED LCD Monitor

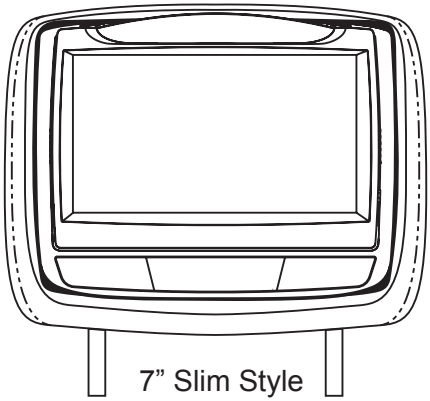

7” Slim Style
LED LCD Monitor

Installation Guide

IMPORTANT NOTICE

Installation of headrest products require careful planning and preparation. Be extremely careful of seats that have airbags built into them. Keep wiring away from any airbag wiring (usually identified by yellow connectors and yellow wire jackets). Damage to airbag wiring can result in personal injury to vehicle occupants. If you have any questions regarding wire routing or installation in a vehicle, please contact VOXX Technical Support at 1-800-225-6074.

When connecting power and ground in a mobile video installation, ensure that the ACC wire is fused at the point where it is connected to the vehicle ACC wiring. Failure to do so may result in damage to the vehicle if a short circuit develops between the vehicle connection point and the mobile video product.

An LCD panel and/or video monitor may be installed in a motor vehicle and visible to the driver if the LCD panel or video monitor is used for vehicle information, system control, rear or side observation or navigation. If the LCD panel or video monitor is used for television reception, video or DVD play, the LCD panel or video monitor must be installed so that these features will only function when the vehicle is in “park” or when the vehicle’s parking brake is applied.

An LCD panel or video monitor used for television reception, video or DVD play that operates when the vehicle is in gear or when the parking brake is not applied must be installed to the rear of the driver’s seat where it will not be visible, directly or indirectly, by the operator of the motor vehicle.

Patented, refer to www.voxxintl.com/company/patents.

MATERIALS INCLUDED IN THIS PACKAGE:

Installation Package (P/N XXXX) (1pc)

a) Wireless FM Interface Box
(P/N 136-XXXX) - (1pc)

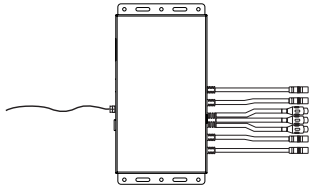

b) 2 Pin DC Power Cable
(P/N 112-3667) - (1pc)

- or -
(P/N 112-4327) - (1pc)

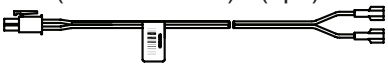

c) HDMI Cable
(P/N 112-XXXX) - (1pc)

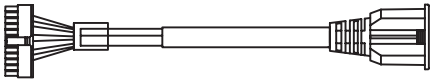

d) Installation Guide

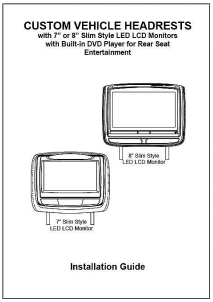
CUSTOM VEHICLE HEADRESTS
with 7" or 8" Slim Style LED LCD Monitors
with Built-in DVD Player for Rear Seat
Entertainment

8" Slim Style
LED LCD Monitor

7" Slim Style
LED LCD Monitor

Installation Guide

The wireless FM Interface Box automatically determines which headrest is M1 and which headrest is M2 and sets each headrest to its own function (IR transmitter channel and IR receiver remote control codes).

The M1 Monitor has Pink/Green DIN connectors and the M2 Monitor has Blue/Yellow DIN connectors and should be connected to their respective connectors.

VEHICLE PREPARATION:

1) Read the installation guide and get familiar with the electrical requirements and connections.

2) Prepare the vehicle by removing any interior trim necessary to gain access to the vehicle's wiring as well as all areas where interconnecting wire harnesses will be located.
   a) Monitors: Vehicle-specific Headrest
      NOTE:
      - The M1 monitor has the pink/green connectors.
      - The M2 monitor has the blue/yellow connectors.
   b) Wireless FMM Interface Box: Located under either seat where monitors are located or in the center console.

3) Locate an accessory power source (+12 VDC should be present when the ignition key is in the accessory and run positions. 0 VDC should be present when the ignition key is in the OFF position) and a good ground. Generally, these wires can be located at the ignition switch or fusebox.

   NOTE: ***Ensure that the switched power is fused at the source. Failure to do so may result in vehicle and wiring damage.***

4) Run the power harness from the power source to the wireless FMM Interface Box. Refer to the Headrest System Wiring Diagram on Page 6. Be sure that all the wiring is protected from sharp edges and is routed in such a manner that it will not be pinched when it is fully installed. Be sure to leave enough slack in the wiring at each component to allow sufficient working room. Be sure to leave enough slack in the monitor cables to allow the headrest to move up or down, and the seat to move backward and forward.

   NOTE: ***Do not interfere with airbags or airbag wiring.***

5) Install the Headrests:

   a) Remove the vehicle's original headrests.
   b) Hold the headrest monitor above the seat and insert the two cables into the headrest support tube holes. Make sure that the headrest is in the correct position (Display facing the rear of the vehicle).
   c) Route the cables through the seat back and out the bottom of the seat.
   d) Place the headrest support tubes into the support tube holes while pulling the cables to remove the slack. Be sure to leave enough slack in the monitor cables to allow the headrest monitor to move up or down.
   e) Keep monitor cables away from seat tracks to avoid wire damage when seats are moved.

VEHICLE PREPARATION (continued):

6) Connect all the components together (electrically) and verify proper operation of all the system functions. (Refer to the Headrest System Wiring Diagram on page 6)

   a) Connect the headrest DIN cables to the FMM Interface Box DIN cables which are color coded. Connect each headrest cable to the correct color cable on the Wireless FMM Interface Box.
   b) Locate an accessory power source (+12 VDC should be present when the ignition key is in the accessory and run positions. 0 VDC should be present when the ignition key is in the OFF position) and a good ground. Generally, these wires can be located at the ignition switch or fusebox..
   c) Extend the wireless FM antenna to its full length and orient for best reception. Do not place it on the Wireless FMM Interface Box or near metal.

NOTE: ***In certain areas where there are a large number of FM radio stations (e.g. large cities, urban areas), the reception of the FM signal may not be satisfactory, resulting in static, distorted sound or signal bleed thru from strong local radio stations. This is not a defect in the product, but the result of a stronger local radio station overpowering the wireless FM transmitter in your headrest system.***

If wireless reception is unsatisfactory, an optional wired relay box (Audiovox P/N FMDIRB) can be installed which will improve audio quality.

7) After verifying the proper operation of the system, mount each component.

8) When all the components are mounted, recheck the entire system to be sure it is functioning correctly. Make sure that no wiring was pinched or connected improperly during the final installation. Refer to the Owner's Manual for system operation.

199 CHANNEL WIRELESS FM MODULATOR:

The system is equipped with a 199 channel built-in wireless FM Modulator, that allows you to listen to the DVD audio signal by tuning your vehicle's radio to one of the selected frequencies.

This feature is accessed by using the FM transmitter buttons on the remote control (FMM ON/OFF). Whenever the FM Modulator is on, broadcast reception on the vehicle's radio will be poor. Switching the FM Modulator off will allow normal radio reception.

HEADREST SYSTEM WIRING DIAGRAM

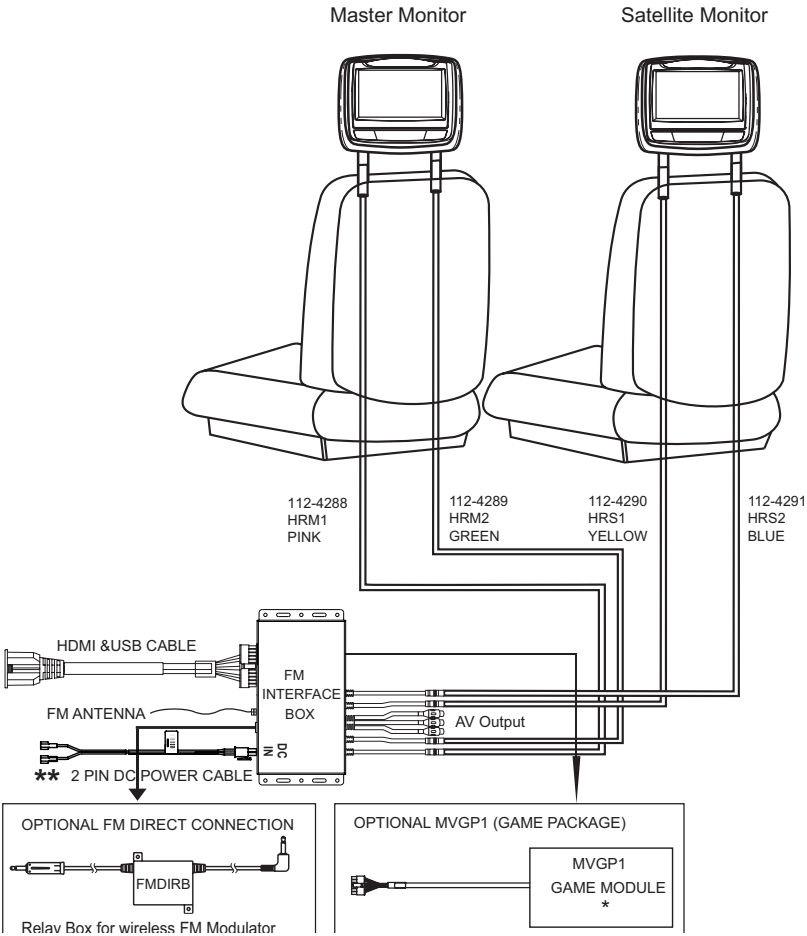

** **NOTE**: Power cable must be fused at the power source to avoid wiring and vehicle damage in the event of a short circuit.

7” ELECTRONICS INSTALLATION/REPLACEMENT GUIDE

Install Monitor Unit To Headrest

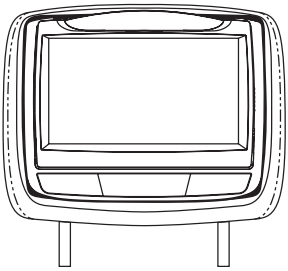

Installation

NOTE: Switch off the ACC power during cable and unit installation. Failure to do so may damage the unit.

1

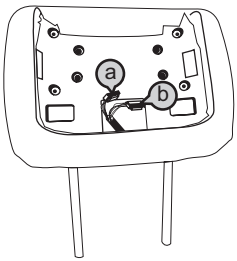

a) Master/Satelite monitor headrest cable (HRM1/HRS1) 8 Pin connector (BLUE)
b) Master/Satelite monitor headrest cable (HRM2/HRS2) 9 Pin connector (WHITE)

2

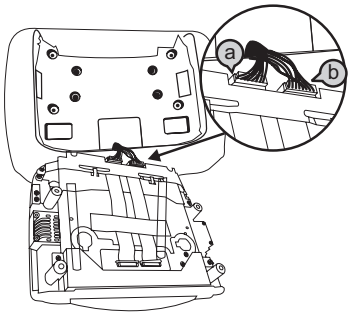

c) Connect HRM1/HRS1 BLUE cable connector to M1 BLUE headrest connector.
d) Connect HRM2/HRS2 WHITE cable connector to M2 WHITE headrest connector.

3

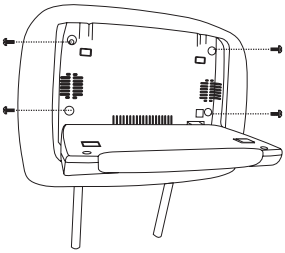

e) Insert the monitor into the monitor tray. Make sure that the cables are not trapped between the monitor and the monitor tray
f) Install Screws (x4)
CAUTION: Do not use a power driver. HAND TIGHTEN ONLY!

4

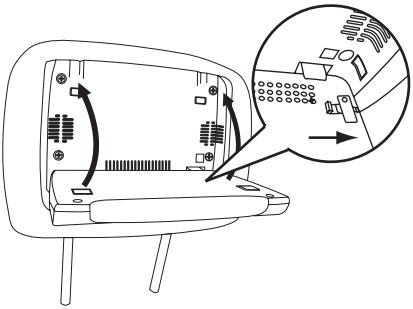

g) Rotate the screen UP and move the locking tab to the right to lock the monitor into the headrest tray.

7” ELECTRONICS INSTALLATION/REPLACEMENT GUIDE (continued)

5

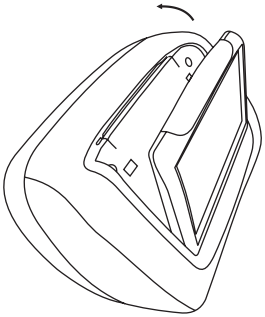

6

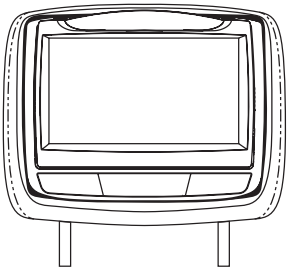

Reverse the procedure for removing the electronics.

8” ELECTRONICS INSTALLATION/REPLACEMENT GUIDE

Install Monitor Unit To Headrest

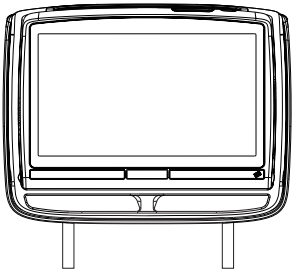

Installation

NOTE: Switch off the ACC power during cable and unit installation. Failure to do so may damage the unit.

①

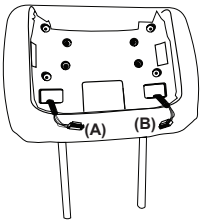

a) Master/Satelite monitor headrest cable (HRM1/HRS1) 8 Pin connector (BLUE)
b) Master/Satelite monitor headrest cable (HRM2/HRS2) 9 Pin connector (WHITE)

②

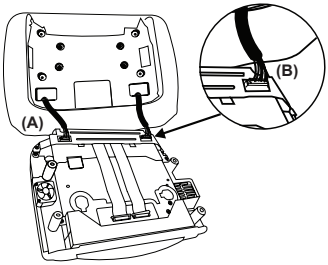

c) Connect HRM1/HRS1 BLUE cable connector to M1 BLUE headrest connector.
d) Connect HRM2/HRS2 WHITE cable connector to M2 WHITE headrest connector.

③

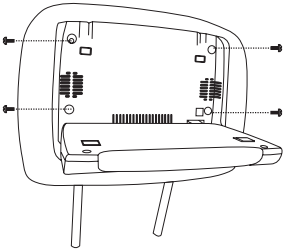

e) Insert the monitor into the monitor tray. Make sure that the cables are not trapped between the monitor and the monitor tray
f) Install Screws (x4)
CAUTION: Do not use a power driver. HAND TIGHTEN ONLY!

④

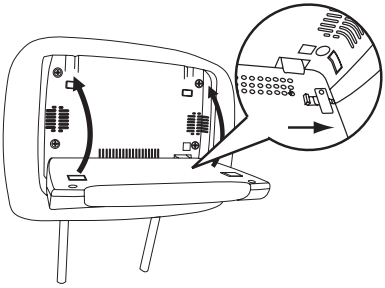

g) Rotate the screen UP and move the locking tab to the right to lock the monitor into the headrest tray.

8” ELECTRONICS INSTALLATION/REPLACEMENT GUIDE (continued)

5

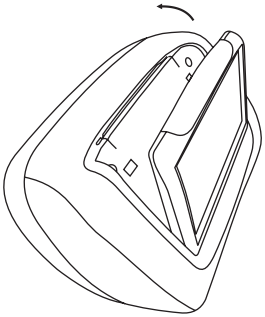

6

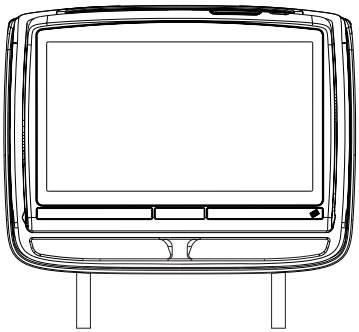

Reverse the procedure for removing the electronics.

OPTIONAL:

The MVGP1 Game Package is the optional accessory package that allows adding a wireless game source feature.

MVGP1 Game Module Package (P/N MVGP1)
The Game Module Package contains the following items:

a) Game Controller P1
(P/N 136-5320) - (1pc)

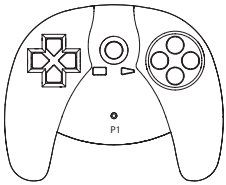

b) Game Controller P2
(P/N 136-5321) - (1pc)

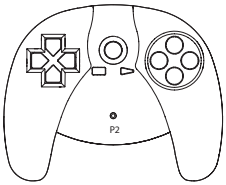

c) Game Module
(P/N 136-5319) - (1pc)

d) Game Module Manual
(P/N 128-9188) - (1pc)

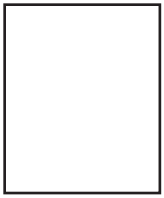

e) Battery 2 Pack
(P/N 156-2227) - (3pcs)

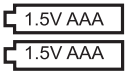

f) Double Sided Tape
(P/N 138-1507) - (1pc)

MVGP1 FEATURES:

When the optional Game Pack is installed, either monitor can be designated as “Player 1”. Selection is based on a “first come, first serve” basis. The second monitor will automatically become “Player 2.”

Refer to the MVGP1 Instruction Manual for additional installation instructions.

TROUBLESHOOTING GUIDE

AUDIO RELATED ISSUES

No audio on wireless headphones while playing a DVD

1. Check that the batteries in wireless headphones are good and that they are installed properly.

2. Check that the headphones are set to the proper channel: Channel A (1) for the M1 monitor, Channel B (2) for the M2 monitor.

3. Check that the monitor is not in MUTE mode.

4. Check that the IR transmitter is set to ON.

No audio from Wireless FM modulator

1. Using the remote control, press M1, the TV button and then the DISPLAY button, check that the OSD indicates that the FM modulator is turned on. If the FM modulator is OFF, press the FMM power button on the remote control.

2. Is the radio tuned to the same station as the FM modulator?

3. Check to see if there is audio on the RCA output connectors of the FMM interface box (the FM modulator uses the same audio for the AV output of the FMM Interface Box).

4. Check the PINK DIN cable for proper connections (audio to and from the M1 monitor travels on the PINK DIN cable).

5. Remove the four screws from the M1 monitor and check the BLUE 8-pin connector to make sure it is plugged in.

6. If audio is not working, unplug the PINK and YELLOW connectors at the FMM Interface Box. Plug the YELLOW connector from the M2 monitor into the PINK connector on the FMM Interface Box. Play a DVD on the M2 monitor, the audio from the M2 monitor should be heard on the radio.

   If audio is heard on the radio most likely there is a problem with the PINK DIN cable.

   If no audio is heard on the radio most likely there is a problem with the GREEN cable. The GREEN cable controls the FM Modulator.

TROUBLESHOOTING GUIDE (CONTINUED)

No audio on the M2 monitor when playing a DVD on the M1 monitor.

1. Check to see if there is audio on the RCA output connectors of the FMM interface box (the FM modulator uses the same audio for the AV output of the FMM Interface Box).

2. If there is audio on the FM Modulator or the RCA output connectors, check the YELLOW DIN cable for proper connections (audio to and from the M2 monitor travels on the YELLOW DIN cable).

3. Remove the four screws from the M2 monitor and check the BLUE 8-pin connector to make sure it is plugged in.

   Note: On headrest monitors that have an AUX input on the front, use an RCA cable to connect from the AV Out of the FMM interface box to the input on the headrest monitor to check harness wiring.

VIDEO RELATED ISSUES

No video on M2 monitor while playing a DVD on the M1 monitor.

1. Make sure the M2 monitor is set to M1 mode. Press the M2 button on the remote control and press the SOURCE button until M1 is displayed on the screen.

2. Check for video out on the YELLOW RCA at the FMM Interface Box.

3. If there is no video in step 2 (above), check the GREEN DIN connector at the FMM Interface Box and the WHITE connector on the back of the M1 monitor for proper connections.

4. If steps 2 and 3 check out OK, check the YELLOW DIN connector at the FMM Interface Box and the BLUE connector on the back of the M2 monitor.

   Note: On headrest monitors that have an AUX input on the front, use an RCA cable to connect from the AV Out of the FMM interface box to the input on the headrest monitor to check harness wiring.

TROUBLESHOOTING GUIDE (CONTINUED)

IR Remote Control

Remote control does not work on either monitor.

1. Check that the battery is good.

2. Check that the battery is installed properly.

3. To control the M1 monitor, make sure M1 is pressed and the DVD button is pressed for DVD controls. For system controls, press the M1 button and the TV button.

4. Test the remote control with a cell phone. Turn on the cell phone camera. Press and hold a button on the remote control while pointing the remote control at the cell phone's camera. If the remote control is working, a blue flickering light will appear on the screen.

5. Unplug the BLUE DIN cable from the FMM Interface Box and retest the remote control on the M1 monitor. If the remote control works, there is a problem with the M2 monitor. Plug the BLUE DIN cable back into the FMM Interface Box.

6. To control the M2 monitor, make sure M2 is pressed and the DVD button is pressed for DVD controls. For system controls, press the M2 button and the TV button.

7. Unplug the GREEN DIN cable from the FMM Interface Box and retest the remote control on the M2 monitor. If the remote control works, there is a problem with the M1 monitor. Plug the GREEN DIN cable back into the FMM Interface Box.

TROUBLESHOOTING GUIDE (CONTINUED)

M1 DIN cables and M2 DIN cables can be swapped for troubleshooting:

Plug the M2 - Blue connector to M1 - Green connector on the box

Plug the M2 - Yellow connector to M1 - Pink connector on the box

Plug the M1 - Green connector to M2 - Blue connector on the box

Plug the M2 - Pink connector to M2 - Yellow connector on the box

This changes the M1 monitor to the M2 monitor and the M2 monitor to the M1 monitor. The (new) M1 monitor can be used to control the wireless FM modulator.

DIN CABLE WIRING FOR M1 and M2 MONITORS

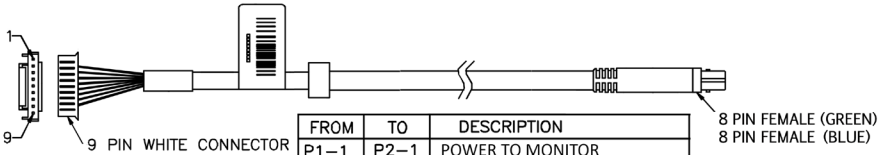

FROM	TO	DESCRIPTION
P1–1	P2–1	POWER TO MONITOR
P1–2	P2–2	POWER GND
P1–3	P2–3	IR FROM MONITOR
P1–4	P2–4	IR GND (SHIELD)
P1–5	P2–5	SDA (DATA) TO/FROM MONITOR
P1–6	P2–6	SCL (CLOCK) TO/FROM MONITOR
P1–7	P2–7	VIDEO OUT FROM MONITOR
P1–8	P2–8	VIDEO OUT GND (SHIELD)
P1–9	–	N/C

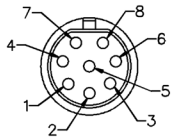

FROM	TO	DESCRIPTION
P1–1	P2–1	AUDIO RIGHT OUT FROM MONITOR
P1–3	P2–3	AUDIO OUT GND (SHIELD)
P1–2	P2–2	AUDO LEFT OUT FROM MONITOR
P1–4	P2–4	AUDIO RIGHT IN TO MONITOR
P1–6	P2–6	AUDIO IN GND (SHIELD)
P1–5	P2–5	AUDIO LEFT IN TO MONITOR
P1–7	P2–7	VIDEO IN TO MONITOR
P1–8	P2–8	VIDEO IN GND (SHIELD)

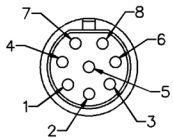

FCC Note

This device complies with part 15 of the FCC Rules. Operation is subject to the following two conditions: (1) This device may not cause harmful interference, and (2) this device must accept any interference received, including interference that may cause undesired operation.

NOTE: This equipment has been tested and found to comply with the limits for a Class B digital device, pursuant to Part 15 of the FCC Rules. These limits are designed to provide reasonable protection against harmful interference in a residential installation. This equipment generates, uses and can radiate radio frequency energy and, if not installed and used in accordance with the instructions, may cause harmful interference to radio communications. However, there is no guarantee that interference will not occur in a particular installation. If this equipment does cause harmful interference to radio or television reception, which can be determined by turning the equipment off and on, the user is encouraged to try to correct the interference by one or more of the following measures:

-- Reorient or relocate the receiving antenna.

-- Increase the separation between the equipment and receiver.

-- Connect the equipment into an outlet on a circuit different from that to which the receiver is connected.

-- Consult the dealer or an experienced radio/TV technician for help.

Changes or modifications not expressly approved by the party responsible for compliance could void the user's authority to operate the equipment.

For Customer Service
Visit Our Website At
www.voxxelectronics.com
Product Information, Photos,
FAQ's, Owner's Manuals

If you have any questions regarding this product or require technical assistance please call 1-800-225-6074.

© 2016 VOXX Electronics Corp., Hauppauge, NY **128-XXXX**