MultiConnect® xDot™

MTXDOT Developer Guide

www.multitech.com

MultiConnect xDot Developer Guide

Models: MTXDOT-NA1-xxx, MTXDOT-EU1-xxx

Part Number: S000645, Version 1.0

Copyright

This publication may not be reproduced, in whole or in part, without the specific and express prior written permission signed by an executive officer of Multi-Tech Systems, Inc. All rights reserved. **Copyright © 2016 by Multi-Tech Systems, Inc.**

Multi-Tech Systems, Inc. makes no representations or warranties, whether express, implied or by estoppels, with respect to the content, information, material and recommendations herein and specifically disclaims any implied warranties of merchantability, fitness for any particular purpose and non-infringement.

Multi-Tech Systems, Inc. reserves the right to revise this publication and to make changes from time to time in the content hereof without obligation of Multi-Tech Systems, Inc. to notify any person or organization of such revisions or changes.

Trademarks and Registered Trademarks

MultiTech, and the MultiTech logo, and MultiConnect are registered trademarks and xDot and Conduit are trademarks of Multi-Tech Systems, Inc. All other products and technologies are the trademarks or registered trademarks of their respective holders.

Legal Notices

The MultiTech products are not designed, manufactured or intended for use, and should not be used, or sold or re-sold for use, in connection with applications requiring fail-safe performance or in applications where the failure of the products would reasonably be expected to result in personal injury or death, significant property damage, or serious physical or environmental damage. Examples of such use include life support machines or other life preserving medical devices or systems, air traffic control or aircraft navigation or communications systems, control equipment for nuclear facilities, or missile, nuclear, biological or chemical weapons or other military applications ("Restricted Applications"). Use of the products in such Restricted Applications is at the user's sole risk and liability.

MULTITECH DOES NOT WARRANT THAT THE TRANSMISSION OF DATA BY A PRODUCT OVER A CELLULAR COMMUNICATIONS NETWORK WILL BE UNINTERRUPTED, TIMELY, SECURE OR ERROR FREE, NOR DOES MULTITECH WARRANT ANY CONNECTION OR ACCESSIBILITY TO ANY CELLULAR COMMUNICATIONS NETWORK. MULTITECH WILL HAVE NO LIABILITY FOR ANY LOSSES, DAMAGES, OBLIGATIONS, PENALTIES, DEFICIENCIES, LIABILITIES, COSTS OR EXPENSES (INCLUDING WITHOUT LIMITATION REASONABLE ATTORNEYS FEES) RELATED TO TEMPORARY INABILITY TO ACCESS A CELLULAR COMMUNICATIONS NETWORK USING THE PRODUCTS.

The MultiTech products and the final application of the MultiTech products should be thoroughly tested to ensure the functionality of the MultiTech products as used in the final application. The designer, manufacturer and reseller has the sole responsibility of ensuring that any end user product into which the MultiTech product is integrated operates as intended and meets its requirements or the requirements of its direct or indirect customers. MultiTech has no responsibility whatsoever for the integration, configuration, testing, validation, verification, installation, upgrade, support or maintenance of such end user product, or for any liabilities, damages, costs or expenses associated therewith, except to the extent agreed upon in a signed written document. To the extent MultiTech provides any comments or suggested changes related to the application of its products, such comments or suggested changes is performed only as a courtesy and without any representation or warranty whatsoever.

Contacting MultiTech

Knowledge Base

The Knowledge Base provides immediate access to support information and resolutions for all MultiTech products. Visit http://www.multitech.com/kb.go.

Support Portal

To create an account and submit a support case directly to our technical support team, visit: https://support.multitech.com.

Support

Business Hours: M-F, 8am to 5pm CT

Country	By Email	By Phone
Europe, Middle East, Africa:	support@multitech.co.uk	+(44) 118 959 7774
U.S., Canada, all others:	support@multitech.com	(800) 972-2439 or (763) 717-5863

Warranty

To read the warranty statement for your product, visit www.multitech.com/warranty.go. For other warranty options, visit www.multitech.com/es.go.

World Headquarters

Multi-Tech Systems, Inc.

2205 Woodale Drive, Mounds View, MN 55112

Phone: (800) 328-9717 or (763) 785-3500

Fax (763) 785-9874

Contents

Chapter 1 Product Overview 6
Overview 6
Documentation Overview 6
Related Documentation 6
mbed Documentation 6
Programming the xDot Microcontroller 7
General mBed Links 7
xDot Platform 7
EUI and Networking 7
Product Build Options 8
Chapter 2 Getting Started 9
Getting Started with the xDot Developer Kit 9
COM Port Enumeration by Operating System 9
Linux 9
Windows 9
Mac 10
Chapter 3 Mechanical Drawings with Pinouts 11
xDot 11
Chapter 4 Specifications and Pin Information 12
MTXDOT Specifications 12
Mapping Data Rate to Spreading Factor/Bandwidth 14
Power Draw 15
Measuring the Power Draw 15
Electrical Characteristics 16
xDot and Processor Pin Information 16
Pin Information 16
Pull-Up/Down 19
xDot Pinout Design Notes 20
Serial Pinout Notes 20
Serial Settings 20
LoRa 20
Throughput Rates 20
Range 20
Chapter 5 Antennas 22
Antenna System 22
U.FL and Trace Antenna Options 22
Pulse Electronics Antenna 23

Antenna Specifications ... 23
RSMA-to-U.FL Coaxial Cables ... 24
Coaxial Cable Specifications ... 24
Ethertronics Chip Antenna ... 25
Antenna Specifications ... 25
Stackup Information ... 25
Developer Board Layer Stackup ... 25
Stackup Table ... 26
Impedance ... 26
Chip Antenna Design Guidelines ... 28
Antenna Pad Layout ... 29
PCB Layout ... 29
OEM Integration ... 30
FCC & IC Information to Consumers ... 30
FCC Grant Notes ... 30
Host Labeling ... 30
Chapter 6 Safety Information ... 31
Handling Precautions ... 31
Radio Frequency (RF) Safety ... 31
Sécurité relative aux appareils à radiofréquence (RF) ... 31
Interference with Pacemakers and Other Medical Devices ... 32
Potential interference ... 32
Precautions for pacemaker wearers ... 32
Device Maintenance ... 32
User Responsibility ... 32
Chapter 7 Regulatory Information ... 33
EMC, Safety, and R&TTE Directive Compliance ... 33
47 CFR Part 15 Regulation Class B Devices ... 33
FCC Interference Notice ... 33
FCC Notice ... 33
Industry Canada Class B Notice ... 34
Chapter 8 Environmental Notices ... 35
Waste Electrical and Electronic Equipment Statement ... 35
WEEE Directive ... 35
Instructions for Disposal of WEEE by Users in the European Union ... 35
REACH Statement ... 36
Registration of Substances ... 36
Substances of Very High Concern (SVHC) ... 36
Restriction of the Use of Hazardous Substances (RoHS) ... 37
Information on HS/TS Substances According to Chinese Standards ... 38
Information on HS/TS Substances According to Chinese Standards (in Chinese) ... 39

Chapter 9 Labels 40
Label Examples 40
Chapter 10 Developer Kit Overview 41
xDot Developer Kit 41
Developer Kit Package Contents 41
Firmware Updates 41
Programming Devices in Production 41
xDot Developer Kit Mechanical Drawings 42
Micro Developer Board LEDs 43
Chapter 11 Developer Board Schematics 44
Assembly Diagrams and Schematics 44
Assembly Diagrams 44
Schematics 46
Chapter 12 Design Considerations 50
Noise Suppression Design 50
PC Board Layout Guideline 50
Electromagnetic Interference 50
Electrostatic Discharge Control 51
Chapter 13 Mounting xDots and Programming External Targets 52
Mounting the Device on Your Board 52
Solder Profile 52
Setpoints (Celsius) 53
xDot Packing 53
Programming External Targets 53
JTAG/SWD Connector 54
Index 55

Chapter 1 Product Overview

Overview

The MultiConnect xDot (MTXDOT) is a LoRaWAN™, low-power RF device, capable of two way communication over long distances, deep into buildings, or within noisy environments* using the unlicensed ISM bands in North America, Europe and worldwide. The xDot is a compact surface-mount device with an mbed enabled processor and enhanced security. The xDot features an integrated ARM® Cortex®-M3 processor and mbed™ compatible software library for developers to control, monitor and bring edge intelligence to their Internet of Things (IoT) applications.

*Actual distance depends on conditions, configuration, antennas, desired throughput, and usage frequency. In dense urban environments, a typical range is 1-2 miles.

Documentation Overview

This manual is one part of xDot documentation. Refer to the *Related Documentation* and *mbed* sections for additional information needed to program your xDot and integrate your application with the MultiConnect Conduit gateway.

This document includes:

- **xDot device information:** including mechanical drawings, specifications, safety and regulatory information, and other device specific content.
- **Developer Kit information:** including design considerations, schematics, and installation and operation information.

This current version of this manual is available at www.multitech.com/support.

Related Documentation

- **DOT Series AT Command Reference:** Includes details on the AT commands available for xDots.
- **MultiTech Developer Site:** Application notes, LoRa information, and documentation for related products such as the MultiConnect Conduit (MTCDT) gateway and the LoRa accessory card (MTAC-LORA) are available on the MultiTech developer site. This site includes information on using the Conduit with xDots. Go to: www.multitech.net
- **Processor Datasheet:** ST ARM® Cortex®-M3 processor (STM32L151CCU6) datasheet is available on the ST website: http://www.st.com/resource/en/datasheet/stm32l151cc.pdf

mbed Documentation

ARM mbed is a free, open-source platform and operating system for embedded devices using the ARM Cortex-M microcontrollers. The mbed website provides free software libraries, hardware designs, and online tools for rapid prototyping of products. The platform includes a standards-based C/C++ SDK, a microcontroller HDK, and supported development boards, an online compiler and online developer collaboration tools.

Note: To send and receive data, you need a LoRaWAN 1.0 gateway, such as MultiTech's MultiConnect Conduit (MTCDT) with an MTAC-LORA accessory card installed.

Programming the xDot Microcontroller

Note: To program an xDot application, you need the xDot Developer kit, which includes an xDot mounted on a developer board.

Use the ARM mbed ecosystem to program the microcontroller. Compile in the cloud or locally, copy the resulting binary file to the mbed USB drive, and reset the xDot.

On the xDot mbed page, MultiTech supplies source code for non-RF portions of the xDot. To comply with FCC and ETSI certification, some portions of the software is available only as binary libraries.

MultiTech offers both development and stable release versions of the library.

- Development version: libmxDot-dev-mbed5
- Stable release version: libmxDot-mbed5

You can use either the mbed online compiler or offline tools.

- Online: Use the mbed-os library in your mbed application
- Offline: Use mbed-cli tools to create, manage, and build your mbed 5.1 application.

General mBed Links

- Explore mbed: http://developer.mbed.org/explore
- Getting Started with mbed: http://developer.mbed.org/getting-started
- mbed Handbook: http://developer.mbed.org/handbook/Homepage
- mbed online compiler documentation: https://developer.mbed.org/handbook/mbed-Compiler
- mbed cli documentation: https://github.com/ARMmbed/mbed-cli/blob/master/README.md
- mbed workspace tools documentation: https://github.com/ARMmbed/mbed-os/blob/master/docs/BUILDING.md#workspace-tools

xDot Platform

The xDot mbed page includes the xDot library, firmware, and test cases
https://developer.mbed.org/platforms/MTS-xDot-L151CC/

EUI and Networking

xDots have an Extended Unique Identifier (EUI). To query the device for the EUI, AT+DI:

AT+DI=<8-BYTE-HEX-MSB>

AT+DI=001122AABBCCDDEE

For information on setting up xDots as part of a LoRa network, go to www.multitech.net.

Product Build Options

Product	Description	Package Quantity
North America		
MTXDOT-NA1-A00	915 MHz LoRa Module UFL/TRC (NAM)	1 or 100
MTXDOT-NA1-A01	915 MHz LoRa Module TRC (NAM)	100
EMEA		
MTXDOT-EU1-A00	868 MHz LoRa Module UFL/TRC (EU)	1 or 100
MTXDOT-EU1-A01	868 MHz LoRa Module TRC (EU)	100
Developer Kits		
MTMDK-XDOT-NA1-A00	MultiConnect xDot Micro Developer Kit - Includes a 915 MHz xDot	
MTMDK-XDOT-EU1-A00	MultiConnect xDot Micro Developer Kit - Includes a 868 MHz xDot	

Note:

- The complete product code may end in .Rx. For example, MTXDOT-NA1-A00.Rx, where R is revision and x is the revision number.

Chapter 2 Getting Started

Getting Started with the xDot Developer Kit

Getting started depends on what you want to do. By default, xDot ships with firmware that supports AT Commands that use the serial I/O. For AT Commands, refer to the separate *MultiConnect Dots AT Command Reference Guide*.

Two serial interfaces are available through the USB interface, one is used to send AT commands to the xDot and the other is for debug messages. Refer to *Chapter 4, Specifications and Pin Information* for information on which pins are available out of the box.

Before starting your project development, make sure you have the latest firmware for the Developer Kit and xDot. Go to the xDot mbed page for firmware. https://developer.mbed.org/platforms/MTS-xDot-L151CC/

To send commands to the xDot:

1. Plug the developer board into a USB port.
2. Open communications software, such as TeraTerm, Putty, or Minicom.
3. Set the following:
    - Baud rate = 115,200
    - Data bits = 8
    - Parity = N
    - Stop bits = 1
    - Flow control = Off

To develop using mbed, the xDot mbed page includes libraries and test cases. Refer to mbed Documentation for details and links.

For help setting up a MultiConnect® Conduit™ to send data to and from an xDot, refer to Related Documentation .

COM Port Enumeration by Operating System

xDots create an AT Commands port and a debug port.

Linux

The following COM ports are created on Linux systems:

- /dev/ttyACMx
- /dev/ttyACMy

Where x and y may be 0 and 1, 3 and 4, etc.

The COM port with lower number is the AT command port and COM port with the higher number is the debug port.

Windows

On Windows systems, COM ports appear in the Device Manager:

- **Debug Port:** mbed Serial Port

- **AT Command Port:** XR21V1410 USB UART

You may need to install a driver for the debug port to function properly. Go to: https://developer.mbed.org/handbook/Windows-serial-configuration

Mac

On Mac systems, COM ports appear in the Device Manager as:

- /dev/cu.usbmodemx

Where x is a string of numbers and possibly letters, ending in a number.

The COM port with lower number is the AT command port and COM port with the higher number is the debug port.

Chapter 3 Mechanical Drawings with Pinouts

xDot

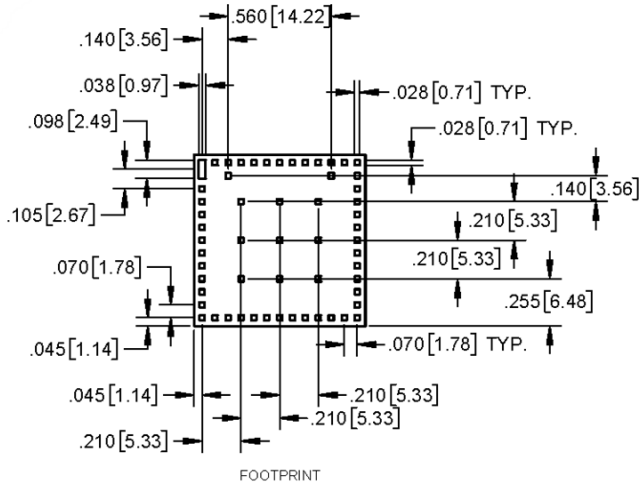

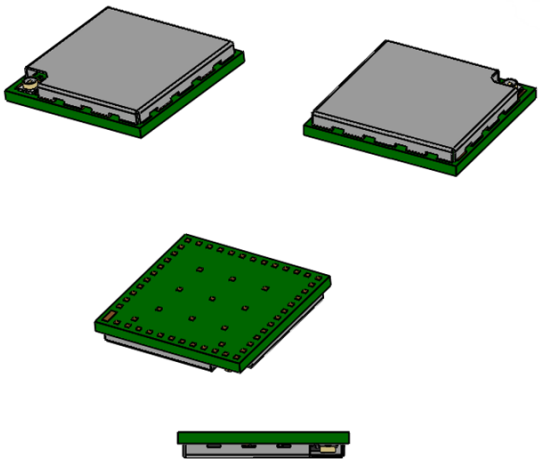

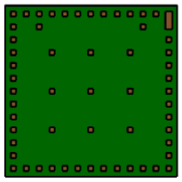

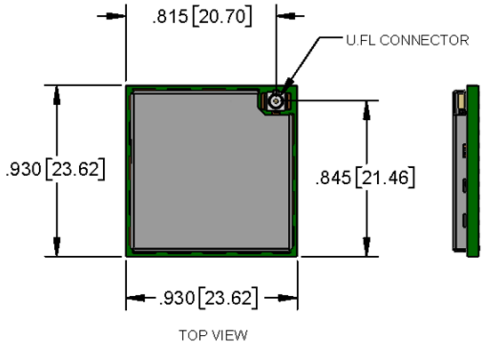

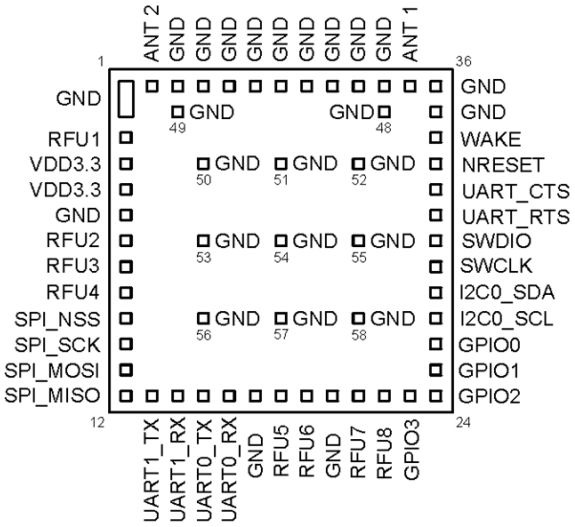

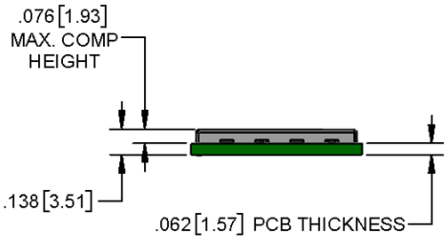

DIMENSIONS IN In [mm]

XDOT

Chapter 4 Specifications and Pin Information

MTXDOT Specifications

Category	Description
General	
Compatibility	LoRaWAN 1.0 specifications
Interfaces	Note that pin functions are multiplexed.
	Up to 19 digital I/O
	Up to 10 analog inputs
	2 DAC outputs
	I2C
	SPI
	Wake pin
	Reset pin
	Full UART
	mbed/simple UART (RX & TX only)
	mbed programming interface
CPU Performance	
CPU	32 MHz
Max Clock	32 MHz
Flash Memory	256 KB, with xDot library 136 KB available; with AT firmware, 56 KB available
EEPROM	8 KB, available 6 KB
SRAM	32 KB
Backup Register	128 byte, available 88
Radio Frequency	
ISM Bands	863 MHz - 868 MHz, 902 MHz - 928 MHz, 915 MHz - 935 MHz
Physical Description	
Weight	0.0001 oz. (0.003g)
Dimensions	Refer to Mechanical Drawings for Dimensions.
RF Connectors	
-UFL Models	U.FL
-Trace Models	Trace Connection

Category	Description	
Environment		
Operating Temperature	-40° C to +85° C	
Storage Temperature	-40° C to +85° C	
Humidity	20%-90% RH, non-condensing	
Power Requirements		
Operating Voltage	2.4 to 3.57 V	
Certifications and Compliance		
EMC and Radio Compliance	EN 300 220-2 V2.4.1:2012	EN 300 220-2 V2.4.1:2012
	EN 301 489-03 V1.6.1:2013	ICES-003:2012
	FCC 15.247:2015	CISPR 22:2008
	FCC 15.109:2015	AS/NZS CISPR 22
	FCC 15.107:2015	AS/NZS 4268:2012 + a1:2013
	RSS 247:2015	Standard 2014 MPE
Safety Compliance	UL 60950-1 2nd ED	
	cUL 60950-1 2nd ED	
	IEC 60950-1 2nd ED AM1 + AM2	
	AS/NZS 60950.1:2015	

Category	Description	
Transmission		
	North America	**EMEA**
Max Transmitter Power Output (TPO)	19 dBm	14 dBm
Maximum Receive Sensitivity	-137 dBm	-137 dBm
Link Budget[1]	147 dB Point-to-Point	147 dB Point-to-Point
Max Effective Isotropic Radiated Power (EiRP)	22 dBm	10 dBm

Category	Description	
Receive Sensitivity		
Spreading Factor	**North America Typical Sensitivity**[2]	**EMEA Typical Sensitivity**[3]
6	-111 dBm	-121 dBm
7	-116 dBm	-124 dBm
8	-119 dBm	-127 dBm
9	-122 dBm	-130 dBm
10	-125 dBm	-133 dBm
11	-127 dBm	-135 dBm
12	-129 dBm	-137 dBm

[1]Greater link budget is possible with higher gain antenna.

[2]RFS_L500: RF sensitivity, Long-Range Mode, highest LNA gain, LNA boost, 500 kHz bandwidth using split Rx/Tx path.

[3]RFS_L125: RF sensitivity, Long-Range Mode, highest LNA gain, LNA boost, 125 kHz bandwidth using split Rx/Tx path.

Mapping Data Rate to Spreading Factor/Bandwidth

	Uplink	Downlink
US/AU	DR0: SF10BW125	DR8: SF12BW500
	DR1: SF9BW125	DR9: SF11BW500
	DR2: SF8BW125	...
	DR3: SF7BW125	DR13: SF7BW500
	DR4: SF8BW500	
	DR5-DR7: RFU	
EU	DR0: SF12BW125	
	...	
	DR5: SF7BW15	
	DR6: SF7BW250	
	DR7: FSK	

Power Draw

Note:

- Multi-Tech Systems, Inc. recommends that you incorporate a 10% buffer into the power source when determining product load.
- Transmit power measured with MTXDOT-NA1-xxx transmitting to a MultiConnect Conduit with an MTAC-LORA-915 accessory card installed.
- Power measurements are similar for MTXDOT-EU1-xxx models. Some 868 MHz sub-band frequencies do not support maximum TXP power of 20.
- Idle current measured with the xDot joined with Conduit, but idle without data transferring.
- Transmit power measured while transferring data packets using spread factor 9. Packet size limited to 53 bytes. The Conduit was set to receive packets from and send back to the xDot. A script was run to send the packet 100 times with either 10 or 53 bytes of data, with an average measurement taken during that time.
- For Inrush charge, recorded the highest observed value from five separate measurements.

Voltage USB = 5v	Standby Mode Current, (Sleep = 0 Deep Sleep)	Stop Mode Current, (Sleep = 1)	Idle current Average	Spreading Factor Setting	Packet Size (# Bytes)
LDO = 3.3	1.9uA	2.2uA	11.1mA	DR1 - SF9BW125	10
LDO = 3.3	1.9uA	2.2uA	11.1mA	DR1 - SF9BW125	53

Voltage USB = 5v	Average Current (Amps) at Low Transmit Power Setting (TXP 2)	Average Current (Amps) at Default Transmit Power Setting (TXP 11)	Average Current (Amps) at Maximum Transmit Power Setting (TXP 20)	Total Inrush Charge measured in MilliCoulombs	Total Inrush Charge DURATION during Powerup (INRUSH Duration)
LDO = 3.3	0.013	0.017	0.018	0.132mC	153uS
LDO = 3.3	0.017	0.024	0.025	0.132mC	147uS

Measuring the Power Draw

To measure the power draw on an xDot developer board:

1. Flash the latest AT command firmware on the xDot.
2. Unplug the xDot from the computer and then reconnect it.
3. Connect current meter across JP30 on the developer board.
4. Set wake pin to wake, **AT+WP=6**.
5. Set wake mode to interrupt, **AT+WM=1**.
6. Put the xDot to sleep, **AT+SLEEP=0|1**.
7. Put jumper across JP5.

   Note: After this step, AT command and debug ports no longer work.

8. Measure current draw.
9. Press the **S2** button on the developer board to wake the xDot

Electrical Characteristics

Signal	Description	Min	Max
Vin Low	Input low level	--	0.3 * VDD
Vin High	Input high level	0.45 * VDD +0.6	--
Vout Low	Output low level	--	.4
Vout High	Output high level	0.4	--
VCC	Standard operating voltage	2.4	3.6
ICC	Operating current (mA) @5V	--	135
	Operating current (mA) @3.3V	--	200

xDot and Processor Pin Information

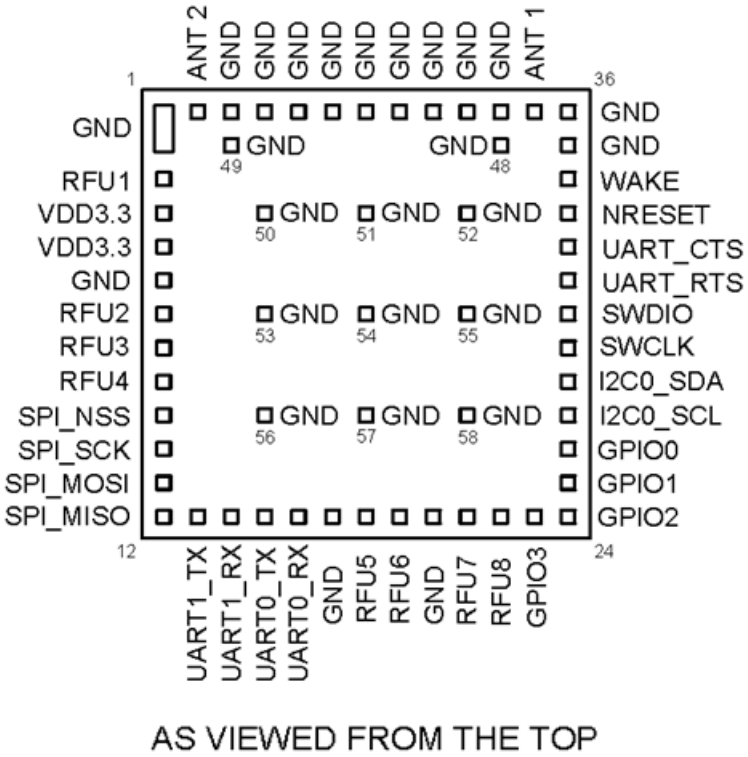

Pin Information

Note:

- Using the mbed platform expands your pin functionality options.
- Pins are on a 0.07 inch grid, and are 0.028 inches square (except for upper left)
- The xDot is 0.045 x 0.045, board is 0.93 x 0.93

48QFN	xDot Pin	Pin Name	SW Name	Function Description	Processor Pin Alt1	Processor Pin Alt2
25	9	PB12	SPI2_NSS	GPIO / SPI	TIM10_CH1/ I2C2_SMBA/ SPI2_NSS/ I2S2_WS/ USART3_CK/ LCD_SEG12	ADC_IN18/ COMP1_INP/ VLCDRAIL2
26	10	PB13	SPI2_SCK	GPIO / SPI	TIM9_CH1/ SPI2_SCK/ I2S2_CK/ USART3_CTS/ LCD_SEG13	ADC_IN19/ COMP1_INP
28	11	PB15	SPI2_MOSI	GPIO / SPI	TIM11_CH1/ SPI2_MOSI/ I2S2_SD/ LCD_SEG15	ADC_IN21/ COMP1_INP/ RTC_REFIN
27	12	PB14	SPI2_MISO	GPIO / SPI	TIM9_CH2/ SPI2_MISO/ USART3_RTS/ LCD_SEG14	ADC_IN20/ COMP1_INP
30	13	PA9	UART1_TX	GPIO / UART	USART1_TX/ LCD_COM1	-
31	14	PA10	UART1_RX	GPIO / UART	USART1_RX/ LCD_COM2	-
12	15	PA2	UART2_TX	Debug UART		
13	16	PA3	UART2_RX	Debug UART		
20	23	PB2	GPIO3	GPIO	BOOT1	VLCDRAIL1/ ADCIN0b
18	24	PB0	GPIO2	GPIO	TIM3_CH3/ LCD_SEG5	ADC_IN8/ COMP1_INP/ OPAMP2_VOUT/ VLCDRAIL3/ VREF_OUT
15	25	PA5	GPIO1	GPIO	TIM2_CH1_ETR/ SPI1_SCK	ADC_IN5/ DAC_OUT2/ COMP1_INP
14	26	PA4	GPIO0	GPIO	SPI1_NSS/ SPI3_NSS/ I2S3_WS/ USART2_CK	ADC_IN4/ DAC_OUT1/ COMP1_INP
45	27	PB8	I2C1_SCL	GPIO / I2C	TIM4_CH3/ TIM10_CH1/ I2C1_SCL/ LCD_SEG16	-

48QFN	xDot Pin	Pin Name	SW Name	Function Description	Processor Pin Alt1	Processor Pin Alt2
46	28	PB9	I2C1_SDA	GPIO / I2C	TIM4_CH4/ TIM11_CH1/ I2C1_SDA/ LCD_COM3	-
37	29	PA14		MBED SWCLK	JTCK-SWCLK	-
34	30	PA13		MBED SWDIO	JTMS-SWDIO	-
33	31	PA12	UART1_RTS	GPIO / UART	USART1_RTS/ SPI1_MOSI	USB_DP
32	32	PA11	UART1_CTS	GPIO / UART	USART1_CTS/ SPI1_MISO	USB_DM
7	33	NRST		NRESET	-	-
10	34	PA0-WKUP1	WAKE	GPIO / WAKE	TIM2_CH1_ETR/ TIM5_CH1/ USART2_CTS	WKUP1/ RTC_TAMP2/ ADC_IN0/ COMP1_INP
	37			ANT1		
	47			RFU (ANT2)		
8,23,35 ,47,49	1, 5, 17, 20,35, 36, 38, 39, 40, 41, 42, 43, 44, 45, 46, 48, 49, 50, 51, 52, 53, 54, 55, 56, 57, 58	VSS		GND		
	2, 6, 7, 8, 18, 19, 21, 22			Reserved		
16		PA6	LORA_DIO0	LORA Radio		
17		PA7	LORA_DIO1	LORA Radio		
29		PA8	LORA_DIO2	LORA Radio		
42		PB6	LORA_DIO3	LORA Radio		
43		PB7	LORA_DIO4	LORA Radio		
40		PB4	LORA_MISO	LORA Radio		
41		PB5	LORA_MOSI	LORA Radio		

48QFN	xDot Pin	Pin Name	SW Name	Function Description	Processor Pin Alt1	Processor Pin Alt2
38		PA15	LORA_NSS	LORA Radio		
11		PA1	LORA_RESET	LORA Radio		
39		PB3	LORA_SCK	LORA Radio		
22		PB11	SE_CLK	Secure Element		
19		PB1	SE_CTRL	Secure Element		
21		PB10	SE_IO	Secure Element		
2		PC13-WKUP2	SE_RESET	Secure Element		
44		BOOT0		Boot0	-	-
3		PC14-OSC32_IN(4)		RTC_CLK	-	OSC32_IN
4		PC15-OSC32_OUT		RTC_CLK	-	OSC32_OUT
5		PH0-OSC_IN(5)		Main 24M	-	OSC_IN
6		PH1-OSC_OUT(5)		Main 24M	-	OSC_OUT

Pull-Up/Down

48QFN	xDot Pin	Pin Name	SW Name	PU/PD
7	33	NRST		10k PU
38		PA15	LORA_NSS	100k PU
19		PB1	SE_CTRL	10k PU
44		BOOT0		10k PD

xDot Pinout Design Notes

Refer to the mechanical drawing for your model for pin locations.

- All pins that go to connectors are directly connected to the processor.
- Refer to Pin Information table for pull up and pull down information.

xDots allow you to program pins depending on your application:

- **Serial:** Available out of the box. See Serial Pinout Notes for details.
- **mbed:** Designed with the STM32L151CCU6 48-pin processor, this option provides the most flexibility. For more information about processor capabilities, see the processor datasheet.

Serial Pinout Notes

Out of the box, these pins are available for serial applications. Refer to the mechanical drawing for your model for pin locations.

- 18 PTA1 UART1_CTS
- 19 PTA2 UART1_RTS
- 36 PTC3 UART1_RX
- 37 PTC4 UART1_TX

Serial Settings

When creating a serial connection with the device on the developer board, open communications software (such as TeraTerm, Putty, or Minicom), and use the following settings:

- Baud rate = 115,200
- Data bits = 8
- Parity = N
- Stop bits = 1
- Flow control = Off

LoRa

Throughput Rates

Theoretical maximum speeds for LoRa mode with ACKs off are:

- Using spreading factor 7 at 125kHz, the throughput rate is 5470 bps (5.47 kbps).
- Using spreading factor 7 at 500kHz the receiving throughput rate is 21900 bps (21.9 kbps).

Note: Data rates in the LoRaWAN specification vary by geographic region.

Range

Variables effecting the range include TX power, antenna gain, RX sensitivity, fade margin, earth's curvature. Use the following formula to calculate the maximum range:

$$Range_{Miles} = 10^{\left(\frac{TxPower + Antenna\ gain\ total - RX\ Sensitivity - Fade\ Margin - 36.56}{20} - LOG_{10}\ (F_{MHz})\right.}$$

The following table provides example settings and the theoretical maximum range based on these settings.

Example	18dB Transmit Power for 915 MHz Models	Units	Example 14dB Transmit Power for 868MHz Models
Frequency	915	MHz	868
TX Power	19	dBm	14
TX Antenna Gain	3	dB	3
RX Sensitivity[1]	-120	dBm	-120
RX Antenna Gain	3	dB	3
Fade Margin[2]	30	dB	30
Distance	8.14	Miles	5.41
Distance	13.08	Km	8.70

[1]RX Sensitivity is set to a conservative -120dBm, but can vary from -117 to -137dBm.

[2]Fade Margin is set at the worst case of 30dB. Fade margin is an allowance a system designer includes to account for unknown variables. The higher the fade margin, the better the overall link quality will be. With a fade margin set to zero, the link budget is still valid, but only in LOS conditions, which is not practical for most designs. The amount of fade margin to include in a calculation depends on the environment in which you will deploy the system. A fade margin of 12 dBm is good, but a better number would be 20 to 30 dBm.

Chapter 5 Antennas

Antenna System

The LoRa antenna performance depends on the implementation and antenna design. The integration of the antenna system into the product is a critical part of the design process; therefore, it is essential to consider it early so the performance is not compromised. If changes are made to the device's certified antenna system, then recertification will be required.

This radio transmitter has been tested with both the Pulse and Ethertronics antennas listed below. If you follow our design guidelines, you do not need to re-certify your design. The antenna you use must maintain the same specifications. It must be of the same type, with similar in-band and out-of-band radiation patterns. Antennas having a greater gain than the maximum gain indicated for the listed type, are strictly prohibited for use with this device.

U.FL and Trace Antenna Options

If using U.FL or trace antennas, note the following:

- **For a simple trace to RF antennas:** Routing must follow standard RF design rules and practices for stripline/miscrostrip for a 50 ohm impedance line. Use the developer board schematics for a reference circuit for the a trace antenna.
- **For U.FL antennas:** The antenna and cable combination in your design cannot exceed the performance of the SMA antenna as listed in the next topic.
- The xDot Developer Board includes an Ethertronics M620710-1K chip antenna, which by default connects the xDot to the chip antenna. Only one antenna, either U.FL or chip, may be used at a time. To use the xDot’s U.FL connector, remove resistor C23 and L1, marked on the following image, to disconnect the chip antenna.

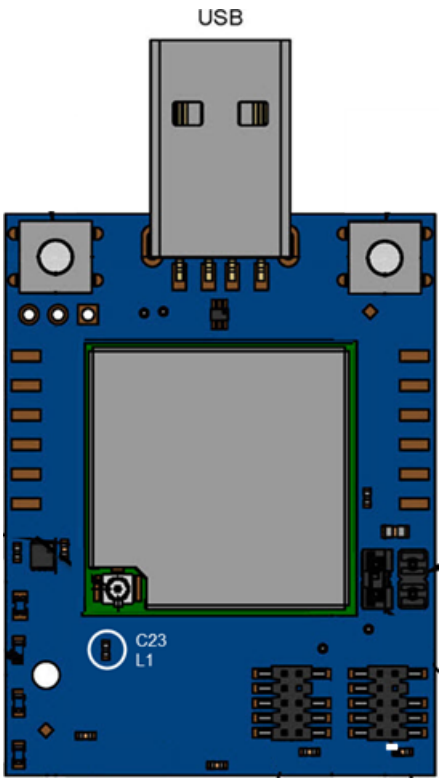

Pulse Electronics Antenna

Manufacturer:	Pulse Electronics
Description:	868-915 MHz RP-SMA Antenna, 8"
Model Number:	W1063
MultiTech Part Number:	45009830L

MultiTech ordering information:

Ordering Part Number	Quantity
AN868-915A-1HRA	1
AN868-915A-10HRA	10
AN868-915A-50HRA	50

Antenna Specifications

Category	Description
Frequency Range	868-928 MHz
Impedance	50 Ohms
VSWR	≤ 2.0
Gain	3.0 dBi
Radiation	Omni

Category	Description
Polarization	Vertical

RSMA-to-U.FL Coaxial Cables

Coaxial Cable Specifications

Optional antenna cables can be ordered from MultiTech

Cable Type	Coaxial Cable
Attenuation	<1.0db
Connector Impedance	50 ohm
Maximum Cable Length	16" (40 cm)

Ordering Information

Part Number	Description
CARSMA-UFL-1	RSMA-to-UFL Coax Cable (Single Pack)
CARSMA-UFL-10	RSMA-to-UFL Coax Cable (Ten Pack)
CARSMA-UFL-100	RSMA-to-UFL Coax Cable (One Hundred Pack)

Ethertronics Chip Antenna

This is the developer board's default antenna.

Manufacturer:	Ethertronics
Description:	915MHz Chip RF Antenna 902MHz ~ 928MHz 2.56dB Solder Surface Mount
Model Number:	M620710-1K
Datasheet:	http://www.ethertronics.com/files/2914/0652/9246/2-Savvi_M620710_ISM__6x2.pdf

Antenna Specifications

Category	Description
Electrical Specifications	
Frequency Range	902—928 MHz
Peak Gain	2.56 dBi
VSWR	2:6:1 max
Impedance	50 ohms unbalanced
Average Efficiency	58%
Power Handling	0.5 Watt cw
Polarization	Linear
Mechanical Specifications	
Mounting	Surface Mount
Size	6.00 x 2.00 x 1.1mm

Stackup Information

Developer Board Layer Stackup

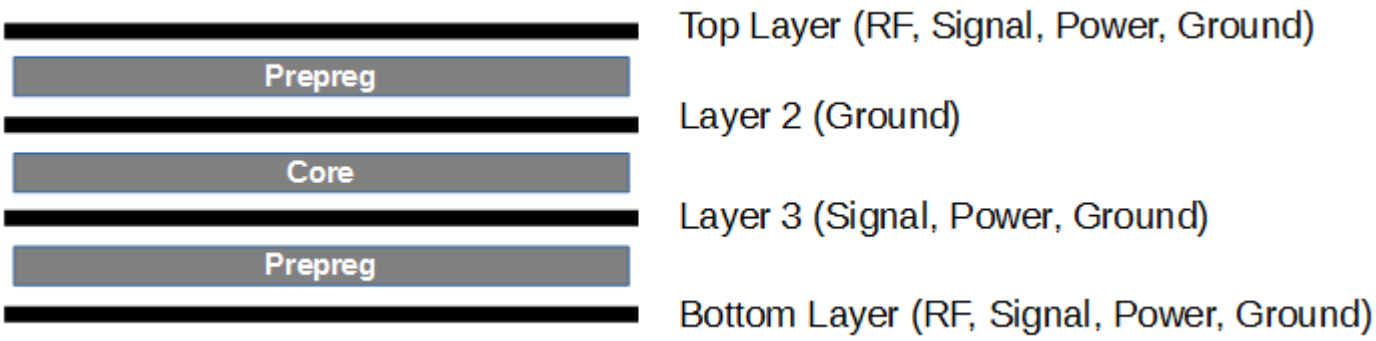

Stackup Table

Part Number: 10000952L
PDF Date: Friday, August 12, 2016 01:42:30 PM

Stackup S02

PCB Fabricator: APCB-Taiwan
Soldermask Type: DSR-220TL 06BL (Blue)
Surface Finish: High Temp. OSP
Stackup Notes: White Silkscreen Blue Soldermask
Created/Modified: 07-10-2012 / 12-31-2015
Measured Thickness:

Layer	Layer Type	Construction	Dk	T (mils)	W (mils)	D (mils)	Z_o (ohms)	Z_{min}/Z_{max} (ohms)	Z_{diff} (ohms)
1	Signal	0.5 oz. Copper	—	1.6/–	11/– 8/–	22/– 7/–	50±10%/–	45/55	90±10%/–
.	Prepreg (TU-72P-1MHz)	7628 (43%)	4.2	7.1	—	—	—	—	—
2	Plane	1 oz. Copper	—	1.4/–	—	—	—	—	—
.	Core (TU-722-1MHz)	5x7628	4.63	39	—	—	—	—	—
3	Signal	1 oz. Copper	—	1.4/–					
.	Prepreg (TU-72P-1MHz)	7628 (43%)	4.2	7.1	—	—	—	—	—
4	Signal	0.5 oz. Copper	—	1.6/–	8/–	7/–			90±10%/–

Impedance

Polar trial balance (L1 refer to L2) impedance 50.87 ohms, using 11 mil tracs, 22mil space.

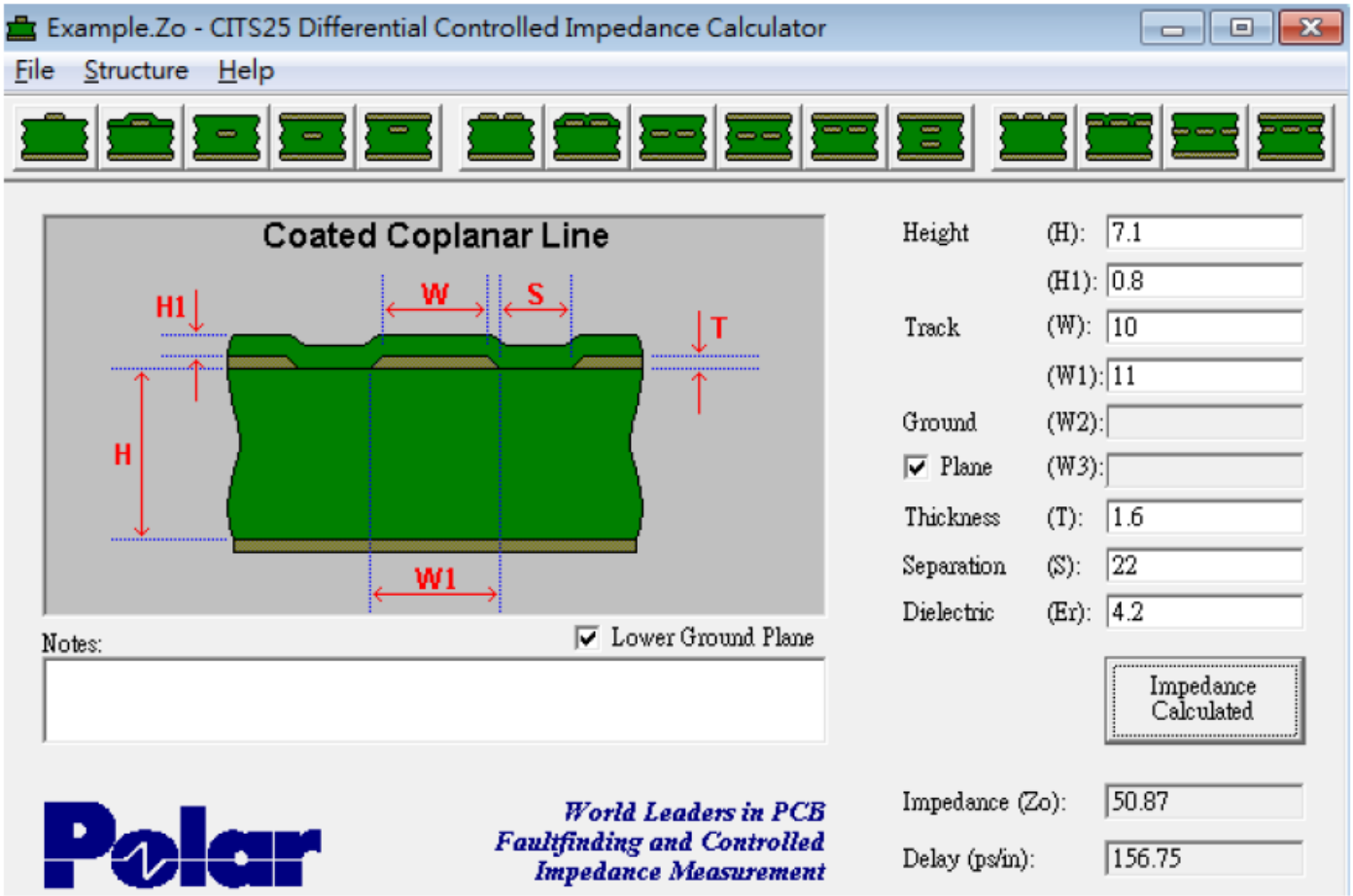

Polar trial balance (L1 refer to L2/L4 refer to L3) impedance 93.54 ohms, using 8 mil tracs, 7mil space.

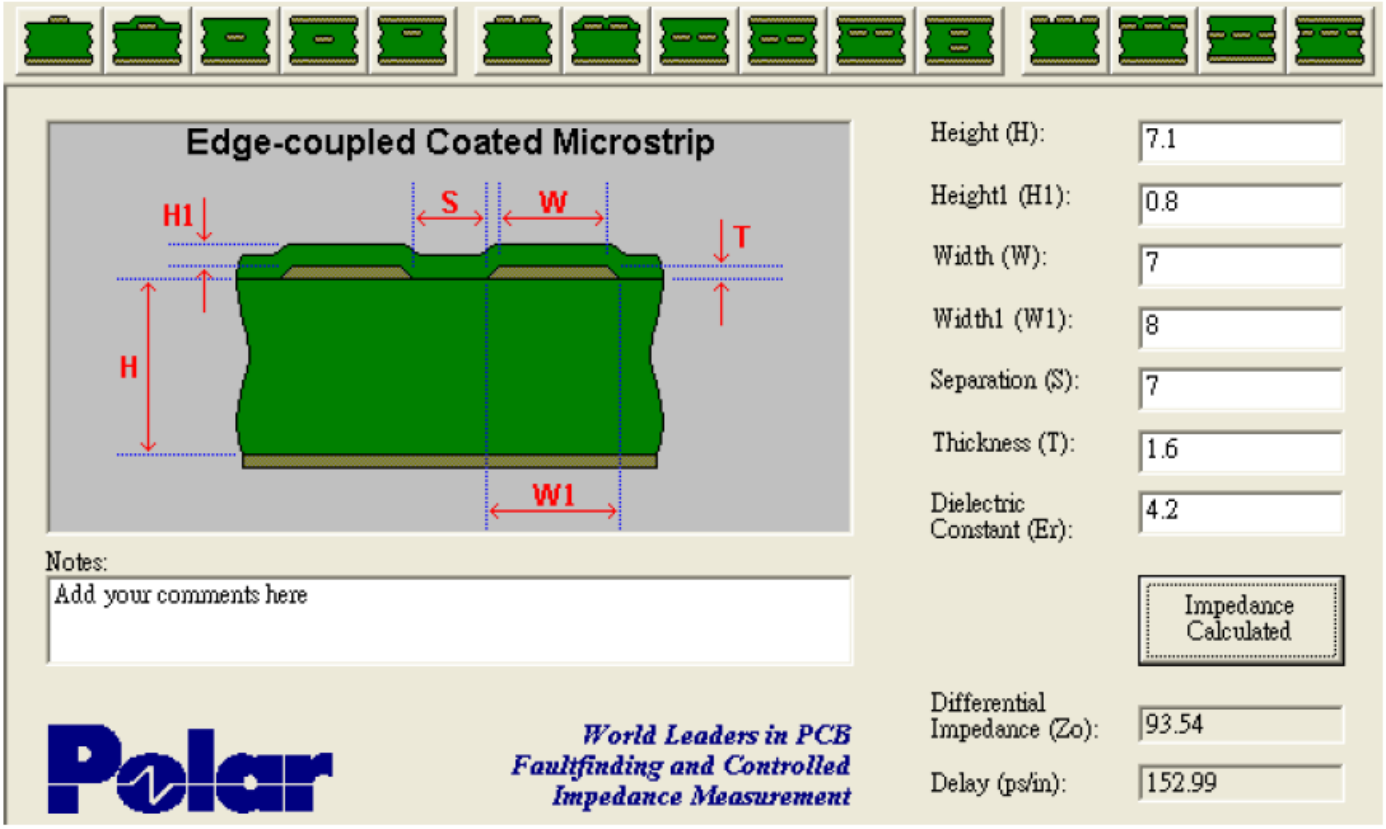

Chip Antenna Design Guidelines

When designing antenna placement for the chip antenna, note the following:

- The antenna's long side must be along the edge of the ground plane.
- Remove the ground plane from all layers below the antenna.
- The distance from the antenna to the enclosure or plastic cover should be greater than 1.5 mm.

The distance from the antenna to relatively large perturbations, such as a shield or large components, depends on the height of surrounding components. It should not be less than 1.5mm.

We recommend a distance equal to or greater than 10mm from the end of the antenna to either end of the PCB distance. Performance is better from larger distances.

Use the recommended land pattern shown in the figures below. Land patterns are composed of a 50 ohm line connected to each antenna feed point. Ground clearance around and under the antenna as shown in the PCB layout is recommended to maximize antenna performance.

Antenna Pad Layout

Antenna Pad Layout

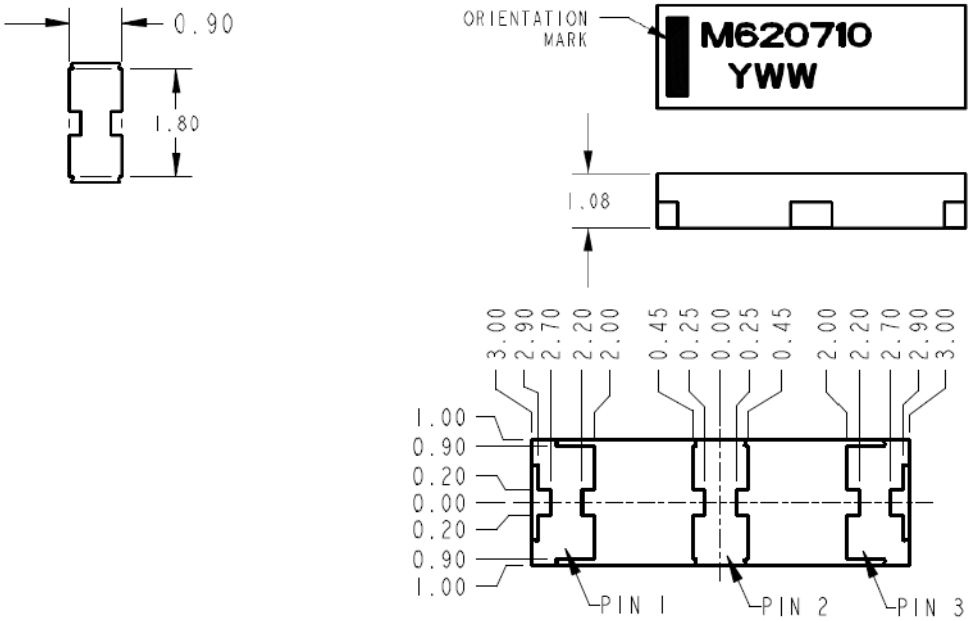

Pin	Description
1	ISM Feed/ Minor Matching Circuit Connection
2	Dummy Pad
3	Matching Circuit Connection

PCB Layout

PCB Layout

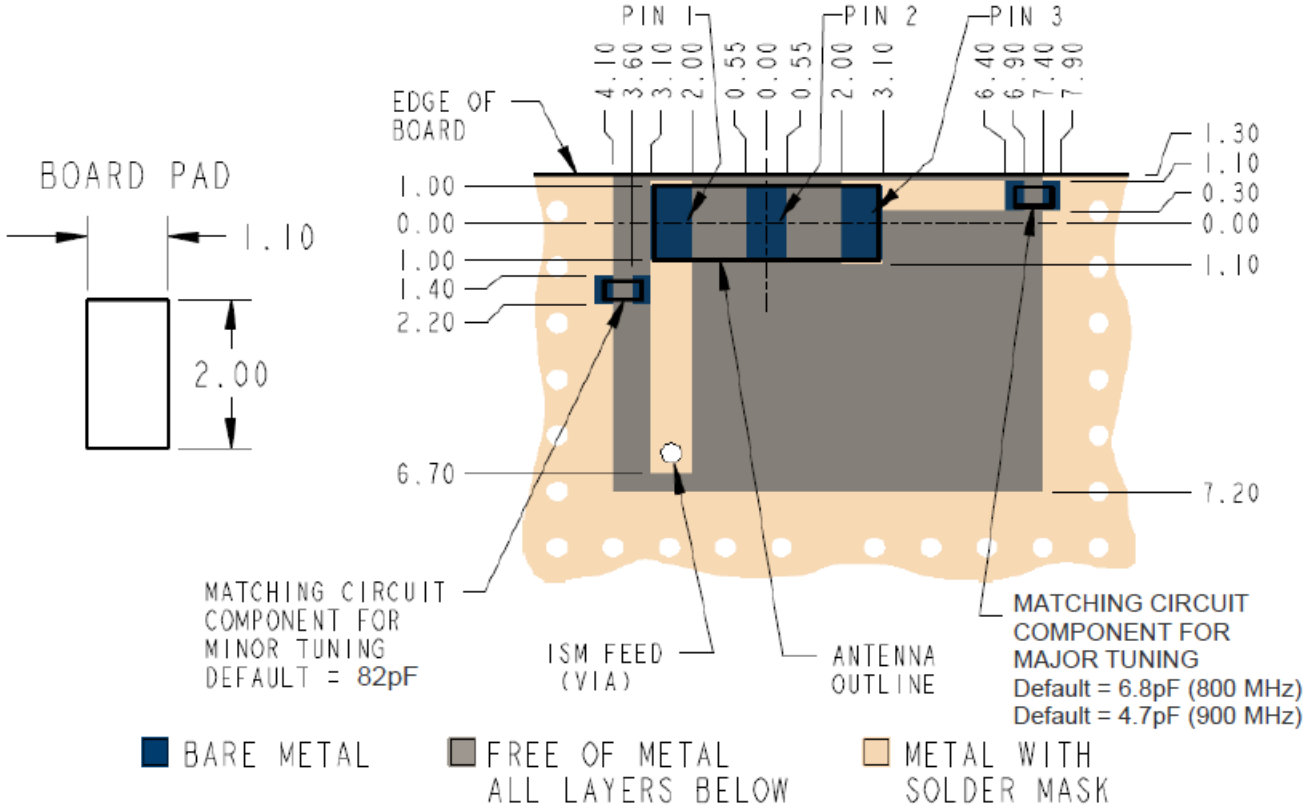

OEM Integration

FCC & IC Information to Consumers

The user manual for the consumer must contain the statements required by the following FCC and IC regulations: 47 C.F.R. 15.19(a)(3), 15.21, 15.105 and RSS-Gen Issue 4 Sections 8.3 and 8.4.

FCC Grant Notes

The OEM should follow all the grant notes listed below. Otherwise, further testing and device approvals may be necessary.

FCC Definitions

Portable: (§2.1093) — A portable device is defined as a transmitting device designed to be used so that the radiating structure(s) of the device is/are within 20 centimeters of the body of the user.

Mobile: (§2.1091) — A mobile device is defined as a transmitting device designed to be used in other than fixed locations and to generally be used in such a way that a separation distance of at least 20 centimeters is normally maintained between the transmitter's radiating structure(s) and the body of the user or nearby persons.

Actual content pending Grant: *This device is a mobile device with respect to RF exposure compliance. The antenna(s) used for this transmitter must be installed to provide a separation distance of at least 20 cm from all persons, and must not be collocated or operate in conjunction with any other antenna or transmitter except in accordance with FCC multi-transmitter product guidelines. Installers and end-users must be provided with specific information required to satisfy RF exposure compliance for installations and final host devices. (See note under Grant Limitations.) Compliance of this device in all final host configurations is the responsibility of the Grantee.*

> **Note:** Host design configurations constituting a device for portable use (<20 cm from human body) require separate FCC/IC approval.

Host Labeling

The following statements are required to be on the host label:

- This device contains FCC ID: AU792U13A16858
- This device contains equipment certified under IC: 125A-0055

For labeling examples, see Cellular Approvals and Labeling Requirements.

Chapter 6 Safety Information

Handling Precautions

To avoid damage due to the accumulation of static charge, use proper precautions when handling any cellular device. Although input protection circuitry has been incorporated into the devices to minimize the effect of static build-up, use proper precautions to avoid exposure to electronic discharge during handling and mounting the device.

Radio Frequency (RF) Safety

Due to the possibility of radio frequency (RF) interference, it is important that you follow any special regulations regarding the use of radio equipment. Follow the safety advice given below.

- Operating your device close to other electronic equipment may cause interference if the equipment is inadequately protected. Observe any warning signs and manufacturers' recommendations.
- Different industries and businesses restrict the use of cellular devices. Respect restrictions on the use of radio equipment in fuel depots, chemical plants, or where blasting operations are in process. Follow restrictions for any environment where you operate the device.
- Do not place the antenna outdoors.
- Switch OFF your wireless device when in an aircraft. Using portable electronic devices in an aircraft may endanger aircraft operation, disrupt the cellular network, and is illegal. Failing to observe this restriction may lead to suspension or denial of cellular services to the offender, legal action, or both.
- Switch OFF your wireless device when around gasoline or diesel-fuel pumps and before filling your vehicle with fuel.
- Switch OFF your wireless device in hospitals and any other place where medical equipment may be in use.

Sécurité relative aux appareils à radiofréquence (RF)

À cause du risque d'interférences de radiofréquence (RF), il est important de respecter toutes les réglementations spéciales relatives aux équipements radio. Suivez les conseils de sécurité ci-dessous.

- Utiliser l'appareil à proximité d'autres équipements électroniques peut causer des interférences si les équipements ne sont pas bien protégés. Respectez tous les panneaux d'avertissement et les recommandations du fabricant.
- Certains secteurs industriels et certaines entreprises limitent l'utilisation des appareils cellulaires. Respectez ces restrictions relatives aux équipements radio dans les dépôts de carburant, dans les usines de produits chimiques, ou dans les zones où des dynamitages sont en cours. Suivez les restrictions relatives à chaque type d'environnement où vous utiliserez l'appareil.
- Ne placez pas l'antenne en extérieur.
- Éteignez votre appareil sans fil dans les avions. L'utilisation d'appareils électroniques portables en avion est illégale: elle peut fortement perturber le fonctionnement de l'appareil et désactiver le réseau cellulaire. S'il ne respecte pas cette consigne, le responsable peut voir son accès aux services cellulaires suspendu ou interdit, peut être poursuivi en justice, ou les deux.
- Éteignez votre appareil sans fil à proximité des pompes à essence ou de diesel avant de remplir le réservoir de votre véhicule de carburant.

- Éteignez votre appareil sans fil dans les hôpitaux ou dans toutes les zones où des appareils médicaux sont susceptibles d'être utilisés.

Interference with Pacemakers and Other Medical Devices

Potential interference

Radio frequency energy (RF) from cellular devices can interact with some electronic devices. This is electromagnetic interference (EMI). The FDA helped develop a detailed test method to measure EMI of implanted cardiac pacemakers and defibrillators from cellular devices. This test method is part of the Association for the Advancement of Medical Instrumentation (AAMI) standard. This standard allows manufacturers to ensure that cardiac pacemakers and defibrillators are safe from cellular device EMI.

The FDA continues to monitor cellular devices for interactions with other medical devices. If harmful interference occurs, the FDA will assess the interference and work to resolve the problem.

Precautions for pacemaker wearers

If EMI occurs, it could affect a pacemaker in one of three ways:

- Stop the pacemaker from delivering the stimulating pulses that regulate the heart's rhythm.
- Cause the pacemaker to deliver the pulses irregularly.
- Cause the pacemaker to ignore the heart's own rhythm and deliver pulses at a fixed rate.

Based on current research, cellular devices do not pose a significant health problem for most pacemaker wearers. However, people with pacemakers may want to take simple precautions to be sure that their device doesn't cause a problem.

- Keep the device on the opposite side of the body from the pacemaker to add extra distance between the pacemaker and the device.
- Avoid placing a turned-on device next to the pacemaker (for example, don’t carry the device in a shirt or jacket pocket directly over the pacemaker).

Device Maintenance

When maintaining your device:

- Do not attempt to disassemble the device. There are no user serviceable parts inside.
- Do not expose your device to any extreme environment where the temperature or humidity is high.
- Do not expose the device to water, rain, or spilled beverages. It is not waterproof.
- Do not place the device alongside computer discs, credit or travel cards, or other magnetic media. The information contained on discs or cards may be affected by the device.
- Using accessories, such as antennas, that MultiTech has not authorized or that are not compliant with MultiTech's accessory specifications may invalidate the warranty.

If the device is not working properly, contact MultiTech Technical Support.

User Responsibility

Respect all local regulations for operating your wireless device. Use the security features to block unauthorized use and theft.

Chapter 7 Regulatory Information

EMC, Safety, and R&TTE Directive Compliance

The CE mark is affixed to this product to confirm compliance with the following European Community Directives:

Council Directive 2014/30/EU on the approximation of the laws of Member States relating to electromagnetic compatibility;
and
Council Directive 2014/35/EU on the harmonization of the laws of Member States relating to electrical equipment designed for use within certain voltage limits;
and
Council Directive 2011/65/EU on the restriction of the use of certain hazardous substances in electrical and electronic equipment;
and
Council Directive 1999/5/EC on radio equipment and telecommunications terminal equipment and the mutual recognition of their conformity.

47 CFR Part 15 Regulation Class B Devices

This equipment has been tested and found to comply with the limits for a Class B digital device, pursuant to part 15 of the FCC Rules. These limits are designed to provide reasonable protection against harmful interference in a residential installation. This equipment generates, uses, and can radiate radio frequency energy and, if not installed and used in accordance with the instructions, may cause harmful interference to radio communications. However, there is no guarantee that interference will not occur in a particular installation. If this equipment does cause harmful interference to radio or television reception, which can be determined by turning the equipment off and on, the user is encouraged to try to correct the interference by one or more of the following measures:

- Reorient or relocate the receiving antenna.
- Increase the separation between the equipment and receiver.
- Connect the equipment into an outlet on a circuit different from that to which the receiver is connected.
- Consult the dealer or an experienced radio/TV technician for help.

Warning: Changes or modifications to this unit not expressly approved by the party responsible for compliance could void the user's authority to operate the equipment.

FCC Interference Notice

Per FCC 15.19(a)(3) and (a)(4) This device complies with part 15 of the FCC Rules. Operation is subject to the following two conditions: (1) This device may not cause harmful interference, and (2) this device must accept any interference received, including interference that may cause undesired operation.

FCC Notice

xDot products are open development based products that contain a sub ghz radio technology. MultiTech has certified for compliance with US and Foreign compliance bodies including FCC, R&TTE and others. (e.g. FCC 15.247:2015 & IC RSS 247:2015)

MultiTech provides software code meant to operate the radio to a level that maintains compliance with the operating modes under which these radio devices were certified. To ensure this level of compliance, the software code is provided in binary form only. Users are prohibited from making any changes that affect the operation of the radio performance. Accessing or controlling the radio through any means other than the provided binary software will require the user to obtain their own intentional radiator license from the certification body governing their locality, as all pre-certification provided with xDot will have been made invalid.

Industry Canada Class B Notice

This Class B digital apparatus meets all requirements of the Canadian Interference-Causing Equipment Regulations.

Cet appareil numérique de la classe B respecte toutes les exigences du Reglement Canadien sur le matériel brouilleur.

This device complies with Industry Canada license-exempt RSS standard(s). The operation is permitted for the following two conditions:

1. the device may not cause harmful interference, and
2. the user of the device must accept any interference suffered, even if the interference is likely to jeopardize the operation.

Le présent appareil est conforme aux CNR d'Industrie Canada applicables aux appareils radio exempts de licence. L'exploitation est autorisée aux deux conditions suivantes:

1. l'appareil ne doit pas produire de brouillage, et
2. l'utilisateur de l'appareil doit accepter tout brouillage radioélectrique subi, même si le brouillage est susceptible d'en compromettre le fonctionnement.

Chapter 8 Environmental Notices

Waste Electrical and Electronic Equipment Statement

Note: This statement may be used in documentation for your final product applications.

WEEE Directive

The WEEE Directive places an obligation on EU-based manufacturers, distributors, retailers, and importers to take-back electronics products at the end of their useful life. A sister directive, ROHS (Restriction of Hazardous Substances) complements the WEEE Directive by banning the presence of specific hazardous substances in the products at the design phase. The WEEE Directive covers all MultiTech products imported into the EU as of August 13, 2005. EU-based manufacturers, distributors, retailers and importers are obliged to finance the costs of recovery from municipal collection points, reuse, and recycling of specified percentages per the WEEE requirements.

Instructions for Disposal of WEEE by Users in the European Union

The symbol shown below is on the product or on its packaging, which indicates that this product must not be disposed of with other waste. Instead, it is the user's responsibility to dispose of their waste equipment by handing it over to a designated collection point for the recycling of waste electrical and electronic equipment. The separate collection and recycling of your waste equipment at the time of disposal will help to conserve natural resources and ensure that it is recycled in a manner that protects human health and the environment. For more information about where you can drop off your waste equipment for recycling, please contact your local city office, your household waste disposal service or where you purchased the product.

July, 2005

REACH Statement

Registration of Substances

After careful review of the legislation and specifically the definition of an “article” as defined in EC Regulation 1907/2006, Title II, Chapter 1, Article 7.1(a)(b), it is our current view Multi-Tech Systems, Inc. products would be considered as “articles”. In light of the definition in § 7.1(b) which requires registration of an article only if it contains a regulated substance that “is intended to be released under normal or reasonably foreseeable conditions of use,” Our analysis is that Multi-Tech Systems, Inc. products constitute nonregisterable articles for their intended and anticipated use.

Substances of Very High Concern (SVHC)

Per the candidate list of Substances of Very High Concern (SVHC) published October 28, 2008 we have reviewed these substances and certify the Multi-Tech Systems, Inc. products are compliant per the EU “REACH” requirements of less than 0.1% (w/w) for each substance. If new SVHC candidates are published by the European Chemicals Agency, and relevant substances have been confirmed, that exceeds greater than 0.1% (w/w), Multi-Tech Systems, Inc. will provide updated compliance status.

Multi-Tech Systems, Inc. also declares it has been duly diligent in ensuring that the products supplied are compliant through a formalized process which includes collection and validation of materials declarations and selective materials analysis where appropriate. This data is controlled as part of a formal quality system and will be made available upon request.

Restriction of the Use of Hazardous Substances (RoHS)

Multi-Tech Systems, Inc.

Certificate of Compliance

2011/65/EU

Multi-Tech Systems, Inc. confirms that its embedded products comply with the chemical concentration limitations set forth in the directive 2011/65/EU of the European Parliament (Restriction of the use of certain Hazardous Substances in electrical and electronic equipment - RoHS).

These MultiTech products do not contain the following banned chemicals[1]:

- Lead, [Pb] < 1000 PPM
- Mercury, [Hg] < 1000 PPM
- Hexavalent Chromium, [Cr+6] < 1000 PPM
- Cadmium, [Cd] < 100 PPM
- Polybrominated Biphenyl, [PBB] < 1000 PPM
- Polybrominated Diphenyl Ether, [PBDE] < 1000 PPM

Environmental considerations:

- Moisture Sensitivity Level (MSL) =1
- Maximum Soldering temperature = 260C (in SMT reflow oven)

[1]Lead usage in some components is exempted by the following RoHS annex, therefore higher lead concentration would be found in some modules (>1000 PPM);

- Resistors containing lead in a glass or ceramic matrix compound.

Information on HS/TS Substances According to Chinese Standards

In accordance with China's Administrative Measures on the Control of Pollution Caused by Electronic Information Products (EIP) # 39, also known as China RoHS, the following information is provided regarding the names and concentration levels of Toxic Substances (TS) or Hazardous Substances (HS) which may be contained in Multi-Tech Systems Inc. products relative to the EIP standards set by China's Ministry of Information Industry (MII).

Hazardous/Toxic Substance/Elements

Name of the Component	Lead (PB)	Mercury (Hg)	Cadmium (CD)	Hexavalent Chromium (CR6+)	Polybrominated Biphenyl (PBB)	Polybrominated Diphenyl Ether (PBDE)
Printed Circuit Boards	O	O	O	O	O	O
Resistors	X	O	O	O	O	O
Capacitors	X	O	O	O	O	O
Ferrite Beads	O	O	O	O	O	O
Relays/Opticals	O	O	O	O	O	O
ICs	O	O	O	O	O	O
Diodes/ Transistors	O	O	O	O	O	O
Oscillators and Crystals	X	O	O	O	O	O
Regulator	O	O	O	O	O	O
Voltage Sensor	O	O	O	O	O	O
Transformer	O	O	O	O	O	O
Speaker	O	O	O	O	O	O
Connectors	O	O	O	O	O	O
LEDs	O	O	O	O	O	O
Screws, Nuts, and other Hardware	X	O	O	O	O	O
AC-DC Power Supplies	O	O	O	O	O	O
Software /Documentation CDs	O	O	O	O	O	O
Booklets and Paperwork	O	O	O	O	O	O
Chassis	O	O	O	O	O	O

X Represents that the concentration of such hazardous/toxic substance in all the units of homogeneous material of such component is higher than the SJ/Txxx-2006 Requirements for Concentration Limits.
O Represents that no such substances are used or that the concentration is within the aforementioned limits.

Information on HS/TS Substances According to Chinese Standards (in Chinese)

依照中国标准的有毒有害物质信息

根据中华人民共和国信息产业部 (MII) 制定的电子信息产品 (EIP) 标准－中华人民共和国《电子信息产品污染控制管理办法》（第 39 号），也称作中国 RoHS, 下表列出了 Multi-Tech Systems, Inc. 产品中可能含有的有毒物质 (TS) 或有害物质 (HS) 的名称及含量水平方面的信息。

有害/有毒物质/元素

成分名称	铅 (PB)	汞 (Hg)	镉 (CD)	六价铬 (CR6+)	多溴联苯 (PBB)	多溴二苯醚 (PBDE)
印刷电路板	O	O	O	O	O	O
电阻器	X	O	O	O	O	O
电容器	X	O	O	O	O	O
铁氧体磁环	O	O	O	O	O	O
继电器/光学部件	O	O	O	O	O	O
ICs	O	O	O	O	O	O
二极管/晶体管	O	O	O	O	O	O
振荡器和晶振	X	O	O	O	O	O
调节器	O	O	O	O	O	O
电压传感器	O	O	O	O	O	O
变压器	O	O	O	O	O	O
扬声器	O	O	O	O	O	O
连接器	O	O	O	O	O	O
LEDs	O	O	O	O	O	O
螺丝、螺母以及其它五金件	X	O	O	O	O	O
交流-直流电源	O	O	O	O	O	O
软件/文档 CD	O	O	O	O	O	O
手册和纸页	O	O	O	O	O	O
底盘	O	O	O	O	O	O

X 表示所有使用类似材料的设备中有害/有毒物质的含量水平高于 SJ/Txxx-2006 限量要求。
O 表示不含该物质或者该物质的含量水平在上述限量要求之内。

Chapter 9 Labels

Label Examples

Note: Actual labels vary depending on the regulatory approval markings and content.

This device complies with part 15 of the FCC Rules. Operation is subject to the following two conditions: (1) This device may not cause harmful interference, and (2) this device must accept any interference received, including interference that may cause undesired operation.

The label shown is not the actual size.

1 - MultiTech Model Identification.
2 - MultiTech Ordering Part Number.
3 - Device Node Number.

Example xDot Device Label

Example Developer Board Device Label

Chapter 10 Developer Kit Overview

xDot Developer Kit

The xDot developer kit comes with an xDot already mounted on the developer board. Simply plug the developer kit into a USB port on your computer to test, program, and evaluate your application.

Developer Kit Package Contents

Your Developer Kit (MTMDK-NX-XDOT-xx) includes the following:

Developer Board	1 - xDot Developer Board with xDot
Customer Notices	Quick Start

Firmware Updates

Before starting your project development, make sure you have the latest firmware for the Developer Kit and xDot. Go to the xDot mbed page for firmware. https://developer.mbed.org/platforms/MTS-xDot-L151CC/

Programming Devices in Production

Consult developer kit schematics for programming options.

xDot Developer Kit Mechanical Drawings

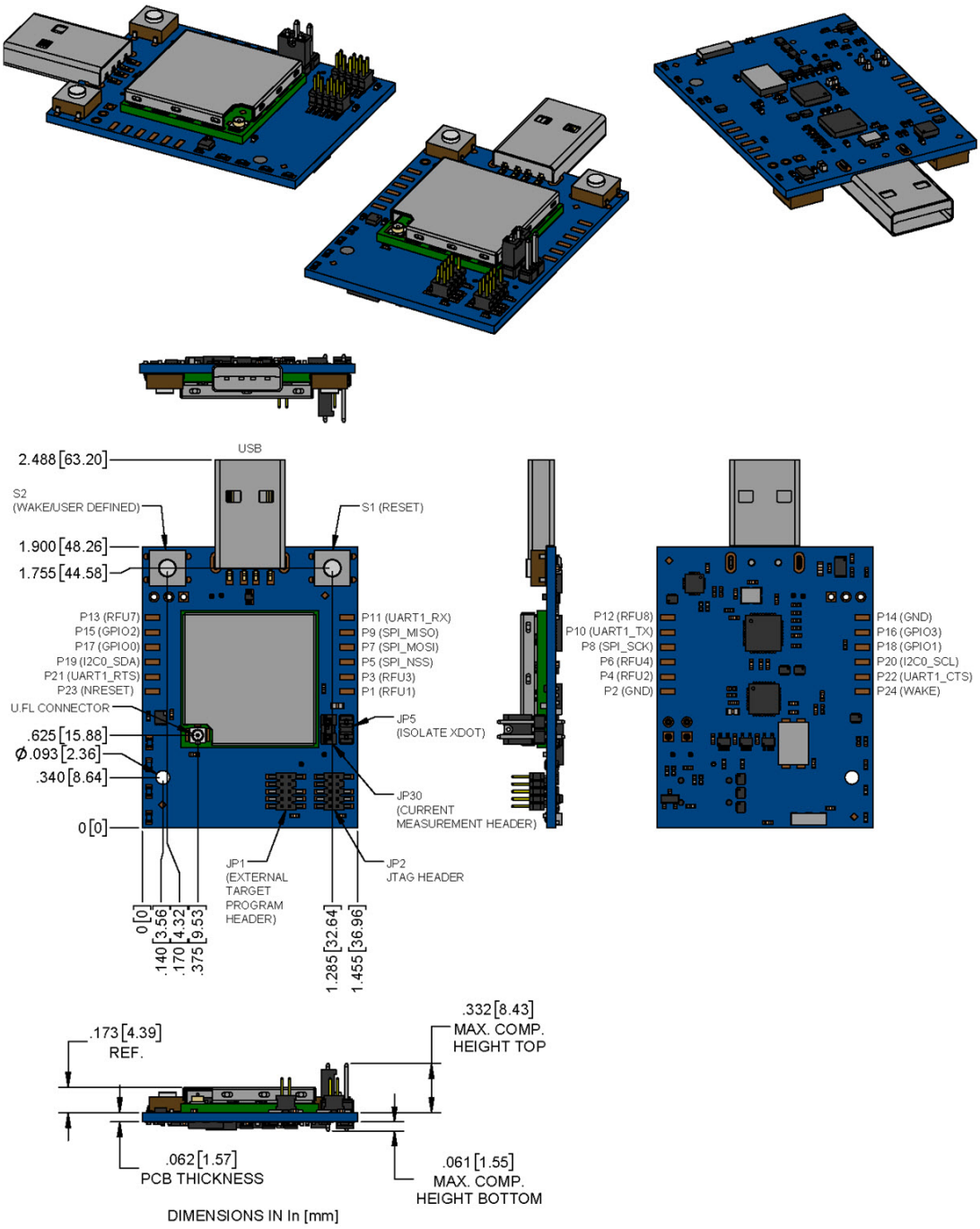

Note: The Reset and Wake buttons reset and wake the xDot processor.

Micro Developer Board LEDs

LED	Description
LED1	User-definable LED.
LED3/SDA	Programming Status.
LED2/PWR	Power, blue light when the board has power.
LED4/PROXY	LED for the proximity sensor, which is next to it (labeled U14 on the top assembly diagram).

Chapter 11 Developer Board Schematics

Assembly Diagrams and Schematics

Assembly Diagrams

Top

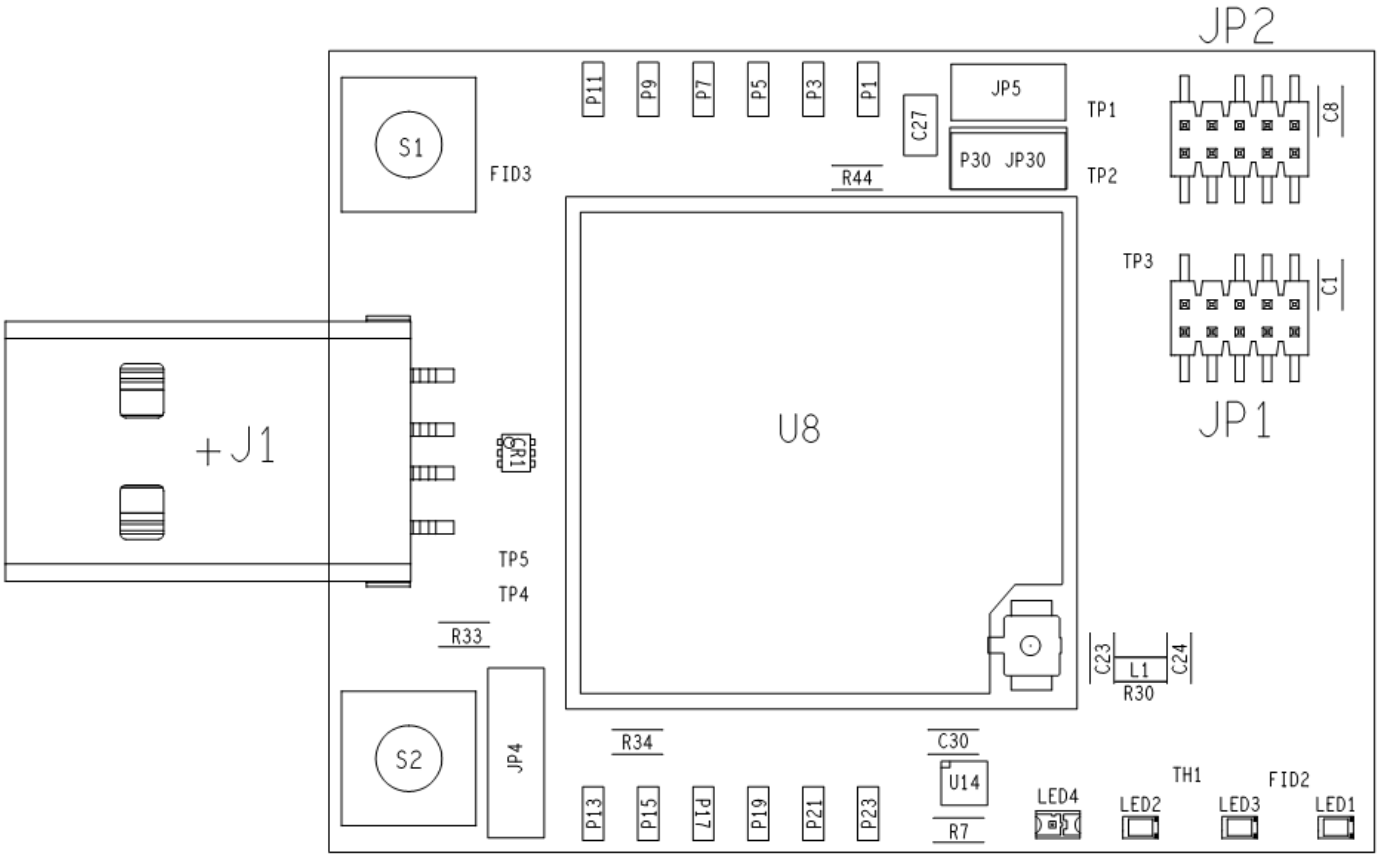

R30 SITS ON L1
C34 SITS ON L1

Bottom

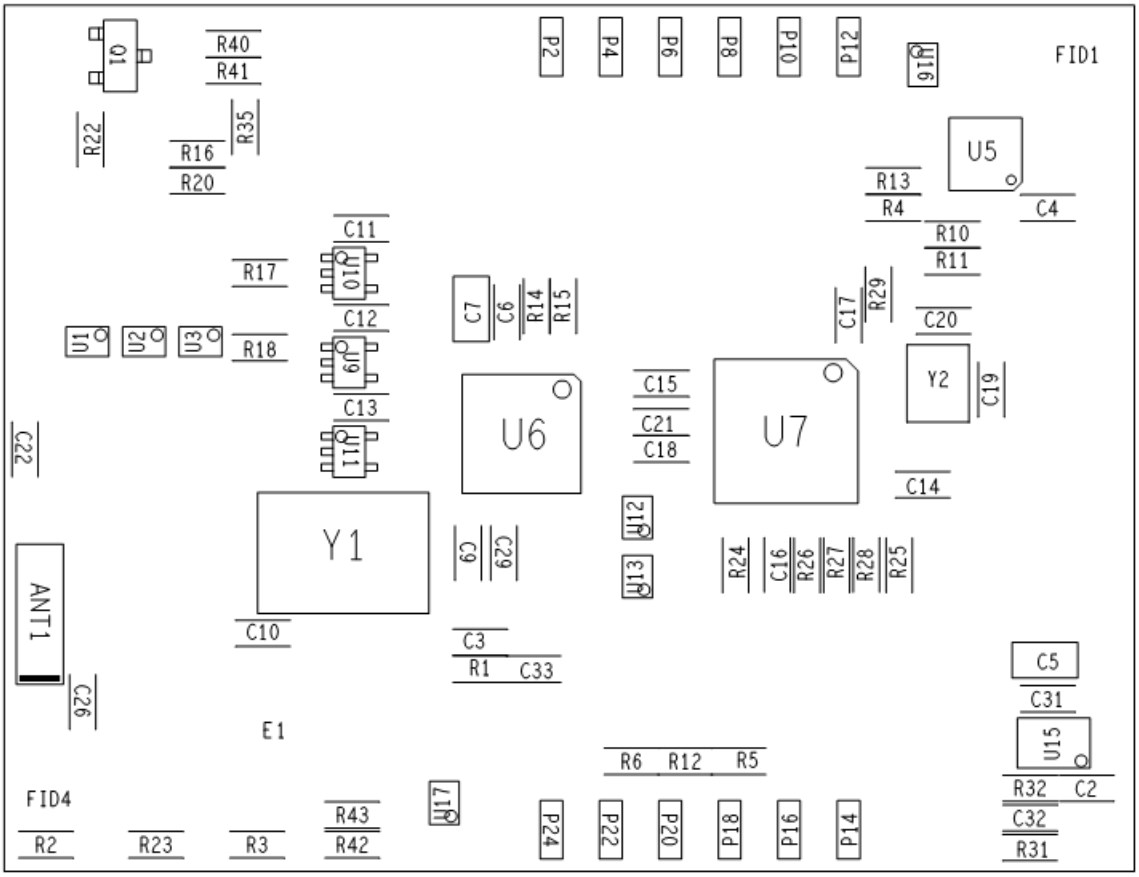
Q1
R40
R41
P2
P4
P6
P8
P10
P12
U16
FID1
R22
R16
R35
R20
U5
R13
R4
C4
C11
R10
R11
R17
U10
C7
C6
R14
R15
C17
R29
C20
C12
U1
U2
U3
R18
U9
Y2
C19
C15
C13
U6
U7
C21
C18
C22
U11
C14
Y1
U12
C9
C29
U13
R24
C16
R26
R27
R28
R25
ANT1
C10
C3
R1
C33
C5
C31
C26
E1
U15
R6
R12
R5
R32
C2
FID4
U17
R43
P24
P22
P20
P18
P16
P14
C32
R2
R23
R3
R42
R31

Schematics

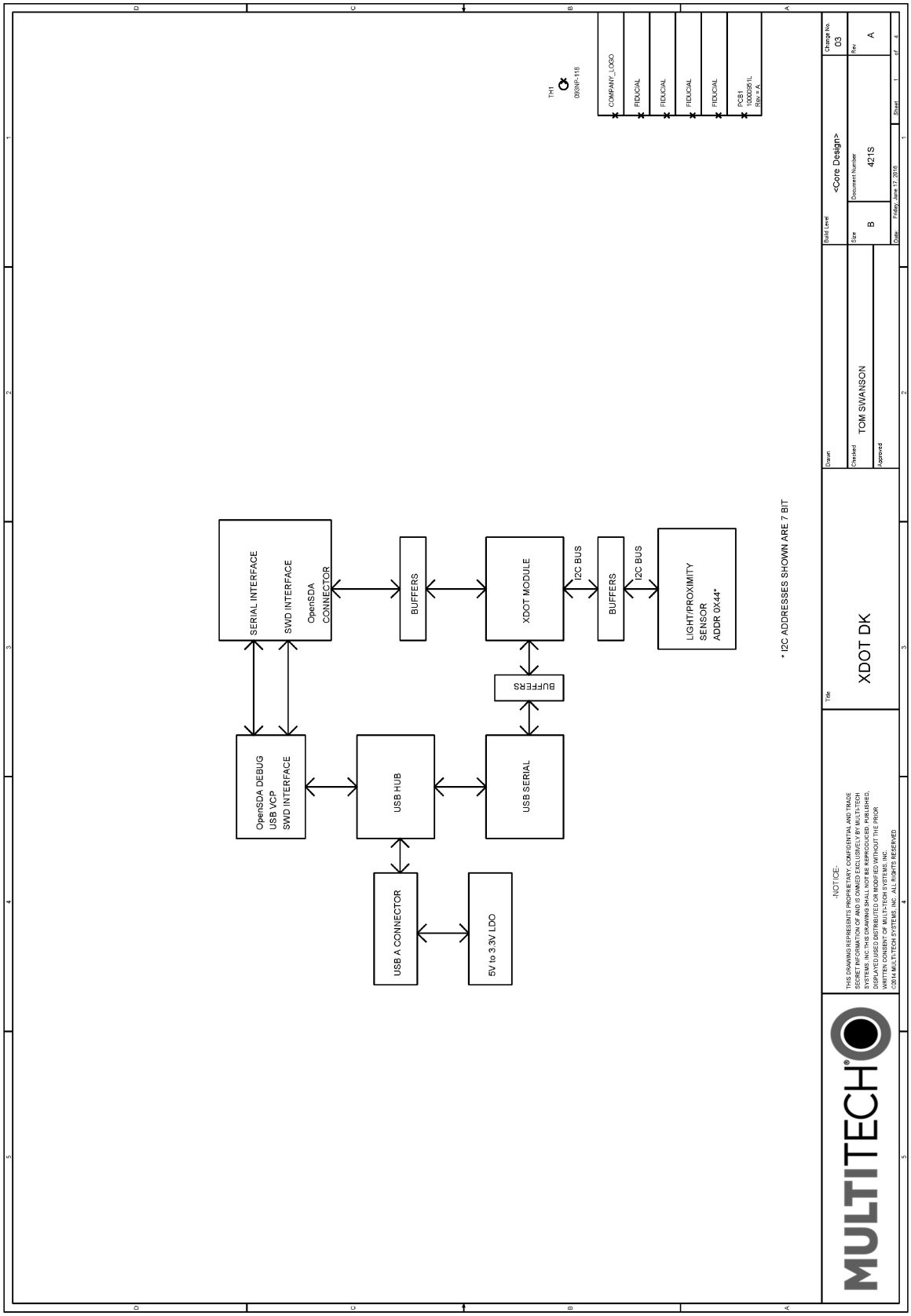
SERIAL INTERFACE
SWD INTERFACE
OpenSDA CONNECTOR
BUFFERS
XDOT MODULE
I2C BUS
BUFFERS
I2C BUS
LIGHT/PROXIMITY SENSOR ADDR 0X44*
BUFFERS
OpenSDA DEBUG
USB VCP
SWD INTERFACE
USB HUB
USB SERIAL
USB A CONNECTOR
5V to 3.3V LDO
* I2C ADDRESSES SHOWN ARE 7 BIT
TH1
093NP-118
COMPANY_LOGO
FIDUCIAL
FIDUCIAL
FIDUCIAL
FIDUCIAL
PCB1
10000951L
Rev = A
Title
XDOT DK
Drawn
Checked
TOM SWANSON
Approved
Build Level
<Core Design>
Size
B
Document Number
421S
Change No.
03
Rev
A
Date
Friday, June 17, 2016
Sheet
1
of
4
-NOTICE-
THIS DRAWING REPRESENTS PROPRIETARY, CONFIDENTIAL AND TRADE SECRET INFORMATION OF AND IS OWNED EXCLUSIVELY BY MULTI-TECH SYSTEMS, INC. THIS DRAWING SHALL NOT BE REPRODUCED, PUBLISHED, DISPLAYED USED DISTRIBUTED OR MODIFIED WITHOUT THE PRIOR WRITTEN CONSENT OF MULTI-TECH SYSTEMS, INC.
©2014 MULTI-TECH SYSTEMS, INC. ALL RIGHTS RESERVED
MULTITECH

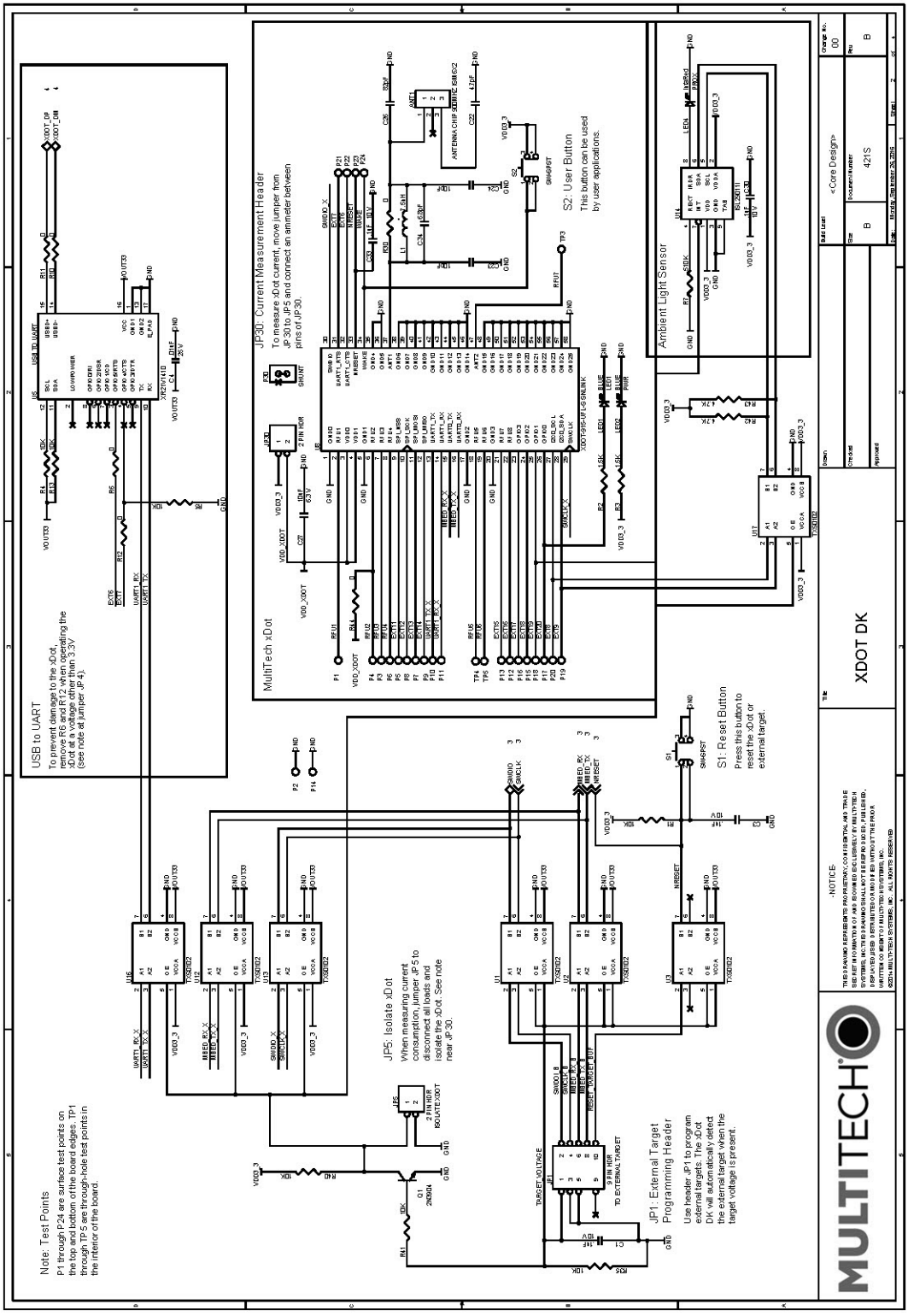
USB to UART
To prevent damage to the xDot, remove R6 and R12 when operating the xDot at a voltage other than 3.3V (see note at jumper JP4).
JP30: Current Measurement Header
To measure xDot current, move jumper from JP30 to JP5 and connect an ammeter between pins of JP30.
S2: User Button
This button can be used by user applications.
Ambient Light Sensor
MultiTech xDot
S1: Reset Button
Press this button to reset the xDot or external target.
JP5: Isolate xDot
When measuring current consumption, jumper JP5 to disconnect all loads and isolate the xDot. See note near JP30.
JP1: External Target Programming Header
Use header JP1 to program external targets. The xDot DK will automatically detect the external target when the target voltage is present.
Note: Test Points
P1 through P24 are surface test points on the top and bottom of the board edges. TP1 through TP5 are through-hole test points in the interior of the board.
XDOT DK
MULTITECH
<Core Design>
421S

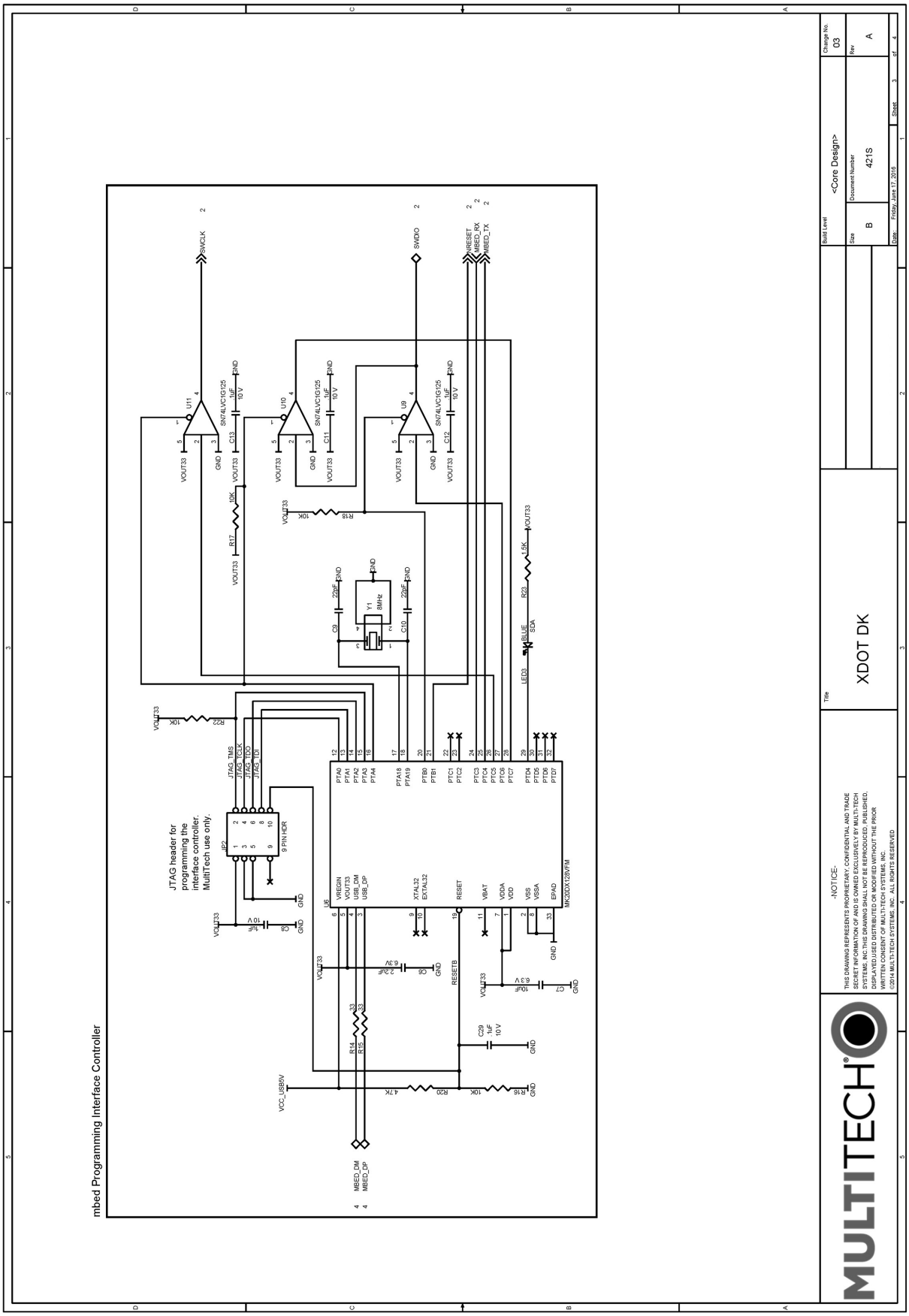
mbed Programming Interface Controller
JTAG header for programming the interface controller. MultiTech use only.
XDOT DK
<Core Design>
421S
MULTITECH

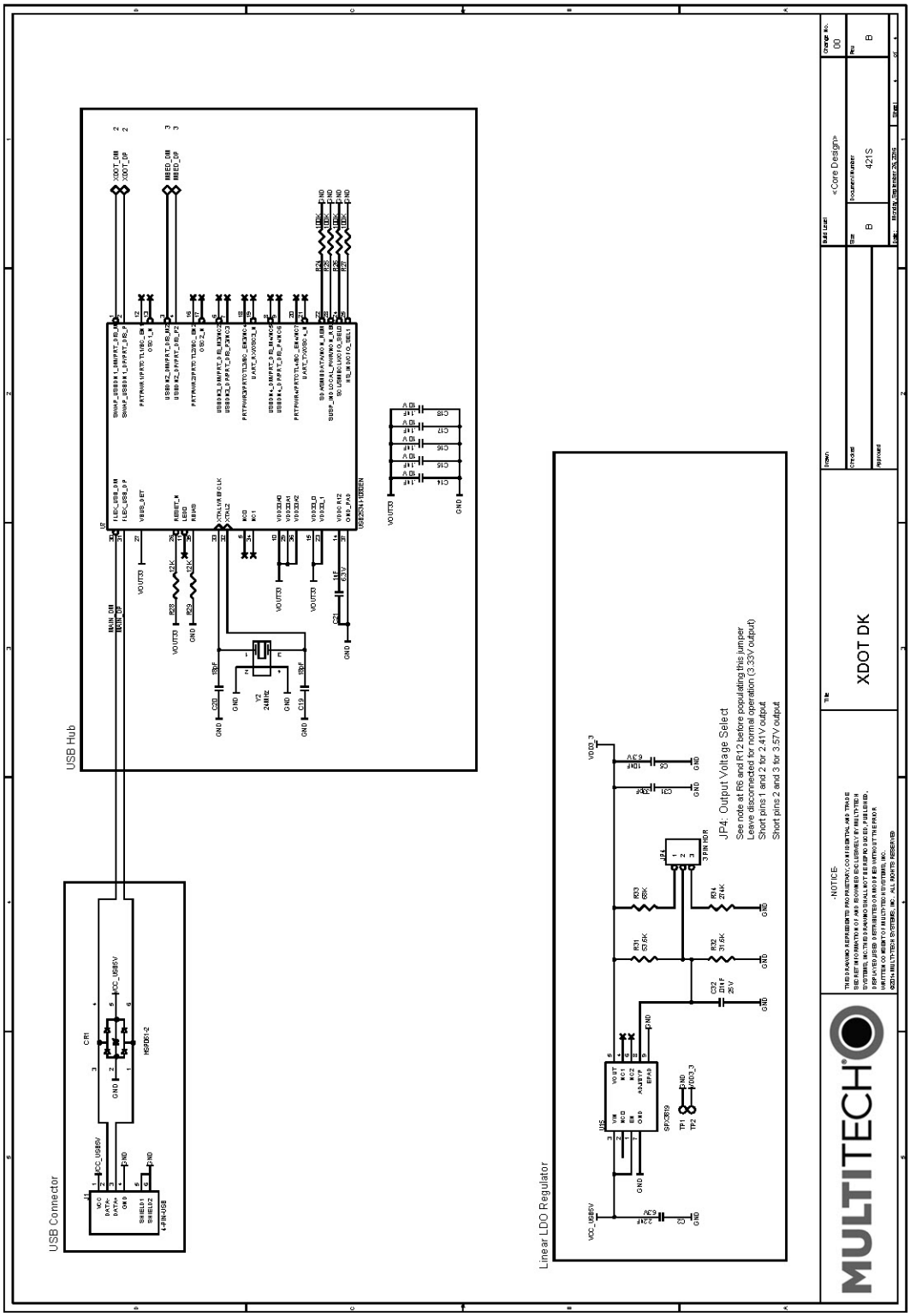
USB Hub
USB Connector
Linear LDO Regulator
JP4: Output Voltage Select
See note at R6 and R12 before populating this jumper
Leave disconnected for normal operation (3.33V output)
Short pins 1 and 2 for 2.41V output
Short pins 2 and 3 for 3.57V output
XDOT DK
MULTITECH

Chapter 12 Design Considerations

Noise Suppression Design

Adhere to engineering noise-suppression practices when designing a printed circuit board (PCB). Noise suppression is essential to the proper operation and performance of the modem and surrounding equipment.

Any OEM board design must consider both on-board and off-board generated noise that can affect digital signal processing. Both on-board and off-board generated noise that is coupled on-board can affect interface signal levels and quality. Noise in frequency ranges that affect modem performance is of particular concern.

On-board generated electromagnetic interference (EMI) noise that can be radiated or conducted off-board is equally important. This type of noise can affect the operation of surrounding equipment. Most local government agencies have certification requirements that must be met for use in specific environments.

Proper PC board layout (component placement, signal routing, trace thickness and geometry, and so on) component selection (composition, value, and tolerance), interface connections, and shielding are required for the board design to achieve desired modem performance and to attain EMI certification.

Other aspects of proper noise-suppression engineering practices are beyond the scope of this guide. Consult noise suppression techniques described in technical publications and journals, electronics and electrical engineering text books, and component supplier application notes.

PC Board Layout Guideline

In a 4-layer design, provide adequate ground plane covering the entire board. In 4-layer designs, power and ground are typically on the inner layers. Ensure that all power and ground traces are 0.05 inches wide.

The recommended hole size for the device pins is 0.036 in. +/-0.003 in. in diameter. Use spacers to hold the device vertically in place during the wave solder process.

Electromagnetic Interference

The following guidelines are offered specifically to help minimize EMI generation. Some of these guidelines are the same as, or similar to, the general guidelines. To minimize the contribution of device-based design to EMI, you must understand the major sources of EMI and how to reduce them to acceptable levels.

- Keep traces carrying high frequency signals as short as possible.
- Provide a good ground plane or grid. In some cases, a multilayer board may be required with full layers for ground and power distribution.
- Decouple power from ground with decoupling capacitors as close to the device's power pins as possible.
- Eliminate ground loops, which are unexpected current return paths to the power source and ground.
- Decouple the telephone line cables at the telephone line jacks. Typically, use a combination of series inductors, common mode chokes, and shunt capacitors. Methods to decouple telephone lines are similar to decoupling power lines; however, telephone line decoupling may be more difficult and deserves additional attention. A commonly used design aid is to place footprints for these components and populate as necessary during performance/EMI testing and certification.
- Decouple the power cord at the power cord interface with decoupling capacitors. Methods to decouple power lines are similar to decoupling telephone lines.

- Locate high frequency circuits in a separate area to minimize capacitive coupling to other circuits.
- Locate cables and connectors to avoid coupling from high frequency circuits.
- Lay out the highest frequency signal traces next to the ground grid.
- If using a multilayer board design, make no cuts in the ground or power planes and be sure the ground plane covers all traces.
- Minimize the number of through-hole connections on traces carrying high frequency signals.
- Avoid right angle turns on high frequency traces. Forty-five degree corners are good; however, radius turns are better.
- On 2-layer boards with no ground grid, provide a shadow ground trace on the opposite side of the board to traces carrying high frequency signals. This will be effective as a high frequency ground return if it is three times the width of the signal traces.
- Distribute high frequency signals continuously on a single trace rather than several traces radiating from one point.

Electrostatic Discharge Control

Handle all electronic devices with precautions to avoid damage due to the static charge accumulation.

See the ANSI/ESD Association Standard (ANSI/ESD S20.20-1999) – a document “for the Development of an Electrostatic Discharge Control for Protection of Electrical and Electronic Parts, Assemblies and Equipment.” This document covers ESD Control Program Administrative Requirements, ESD Training, ESD Control Program Plan Technical Requirements (grounding/bonding systems, personnel grooming, protected areas, packaging, marking, equipment, and handling), and Sensitivity Testing.

MultiTech strives to follow these recommendations. Input protection circuitry is incorporated in MultiTech devices to minimize the effect of static buildup. Take precautions to avoid exposure to electrostatic discharge during handling.

MultiTech uses and recommends that others use anti-static boxes that create a faraday cage (packaging designed to exclude electromagnetic fields). MultiTech recommends that you use our packaging when returning a product and when you ship your products to your customers.

Chapter 13 Mounting xDots and Programming External Targets

Mounting the Device on Your Board

A footprint diagram is included on the xDot Mechanical Diagram.

Solder Profile

Solder Paste: SAC NC 254

Note: Calculate slope over 120 seconds

Name	Low Limit	High Limit	Units
Max Rising Slope (Target=1.0)	0	2	Degrees/Second
Max Falling Slope	-2	-0.1	Degrees/Second
Soak Time 150-170C	15	45	Seconds
Peak Temperature	235	250	Degrees Celsius
Total Time Above 218C	30	90	Seconds

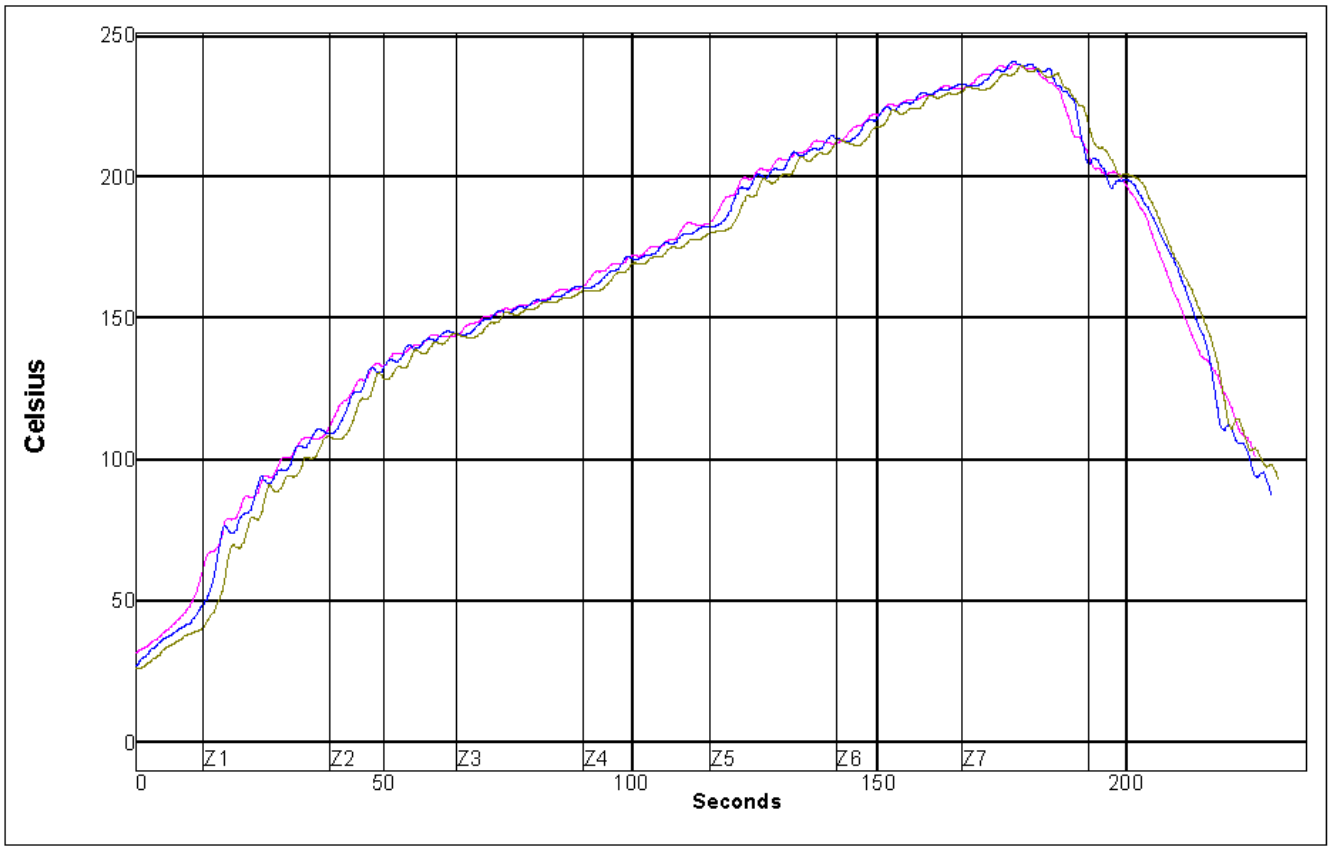

Setpoints (Celsius)

Zone	1	2	3	4	5	6	7
Top	130	160	170	190	230	245	255
Bottom	130	160	170	190	230	245	255
Conveyer Speed		32.0 inch/minute					

		Max Rising Slope		Max Falling Slope		Soak Time 150-170C		Peak Temp		Total Time /218C	
TC	Position	Slope	PWI	Slope	PWI	Time	PWI	Temp	PWI	Time	PWI
1	<TC2>	1.38	38%	-0.63	45%	28.82	-8%	240.22	-30%	43.61	-55%
2	<TC3>	1.38	38%	-0.75	32%	26.75	-22%	241.21	-17%	43.66	-54%
3	<TC4>	1.38	38%	-0.70	36%	29.47	-4%	239.56	-39%	43.29	-56%
Delta		0.00		0.12		2.72		1.65		0.37	

xDot Packing

xDots ship on 20 piece trays, which you can use for pick and place handling.

Warning: Maximum temperature for these trays is 65° C.

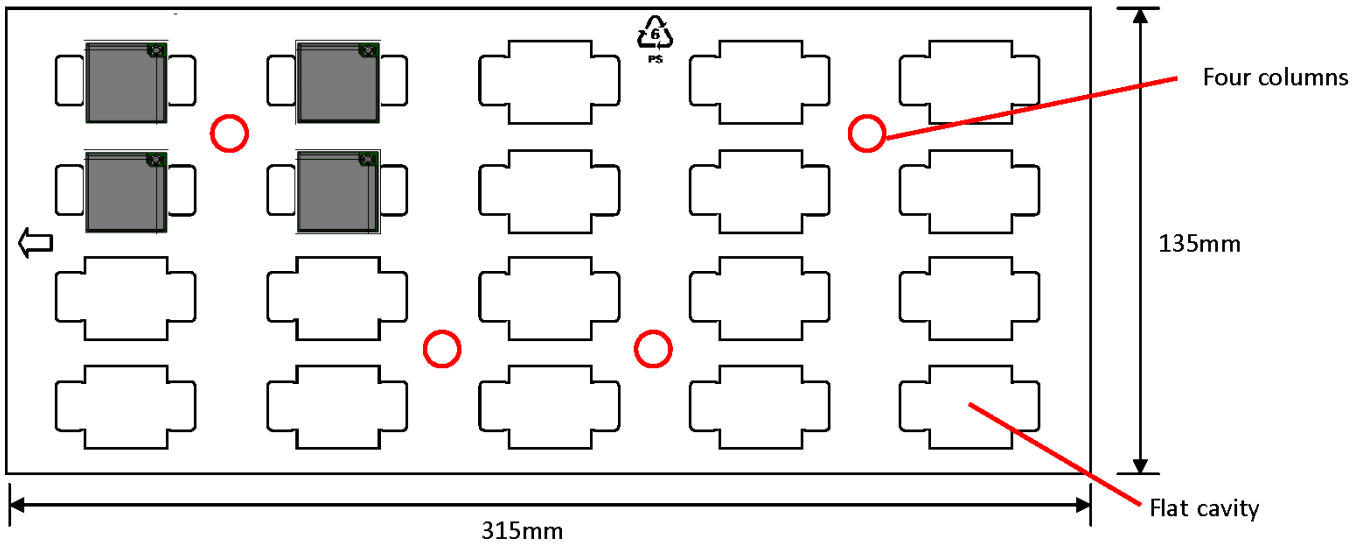

Programming External Targets

You can use the xDot developer board to program external targets. To do this:

1. Connect header JP1 to your target board with a 9-position ribbon cable.[1]
2. Apply power to your target board.

3. When the xDot developer board detects a target voltage on Pin 1 of header JP1, it redirects the mbed programming interface to the external target. You can use the mbed programming environment as normal to program and debug the external target.

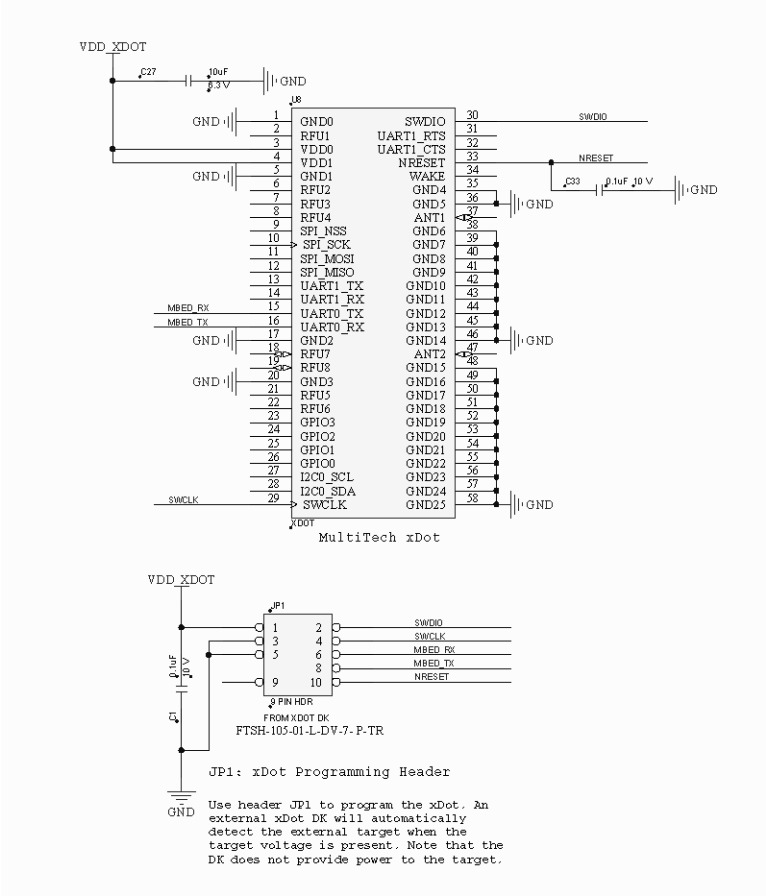

[1]MultiTech recommends the Samtec FFSD-05-D-06.00-01-N ribbon cable.

JTAG/SWD Connector

The developer board uses an unshrouded 10-pin header.

Suitable connector headers include:

- Harwin: M50-3500542
- Mouser: 855-M50-3500542
- Samtec shrouded header: FTSH-105-01-F-D-K

The Samtec FTSH-105 header dimensions are 0.25"x 0.188" (6.35mm x 4.78mm).

Ensure that you connect your cable correctly, typically by matching the "1" marked on the board to the cable's red stripe.

Index

schematics
Developer Board 44

A

antenna 22 23
developer board 25
antenna design guidelines 28
assembly diagrams
Developer Board 44
AT command
port 9

B

baud rate 20
board components
Micro Developer Board.....43
build options 8

C

cable
coaxial 24
certifications 12
Chinese hazardous substances
Chinese version.....39
English version 38
Class B 33
Industry Canada 34
COM ports 9
Conduit.....6

D

data bits 20
debug port 9
design guidelines
antenna 28
device
maintenance 32
dimensions 11
documentation.....6

E

electrical characteristics.....16
electromagnetic interference 50
electrostatic discharge 51
EMI 50
ESD 51
EUI 7
external targets.....53

F

FCC
grant notes.....30
FCC Notice
Class B 33
flow control.....20

G

ground plane 50

H

handling precautions due to ESD.....51
hazardous substances 37
host labeling.....30

I

Industry Canada
Class B 34
interférence des radiofréquences.....31

J

JTAG connector 54

K

KDB 447498 Section 8 30

L

labeling
host 30

labels 40
Linux 9
LoRa
    range 20

M

Mac 9
maintenance 32
mbed 6
mechanical drawings.....11
    Micro Developer Board.....42
MTAC-LORA.....6
MTCDT.....6
MultiConnect 6

N

network, connecting 7
noise suppression.....50

P

packing list 41
parity 20
PC board layout.....50
pin information 16
pinout notes.....20
ports 9
power draw 15
    measuring 15
processor.....6
programming external targets 53

R

radio frequency interference 31
range 20
receive sensitivity.....12
related products.....6
ribbon cable 53
RoHS 37
RSMA-to-UFL cable 24

S

safety
    RF interference 31
safety standards 50
serial settings 20
solder profile 52
specifications.....12
static.....31
stop bits.....20
sécurité
    interférences RF 31

T

trace antenna 22
transmission 12

U

U.FL antenna 22
user responsibility 32

W

Windows 9

X

xDot packing.....53