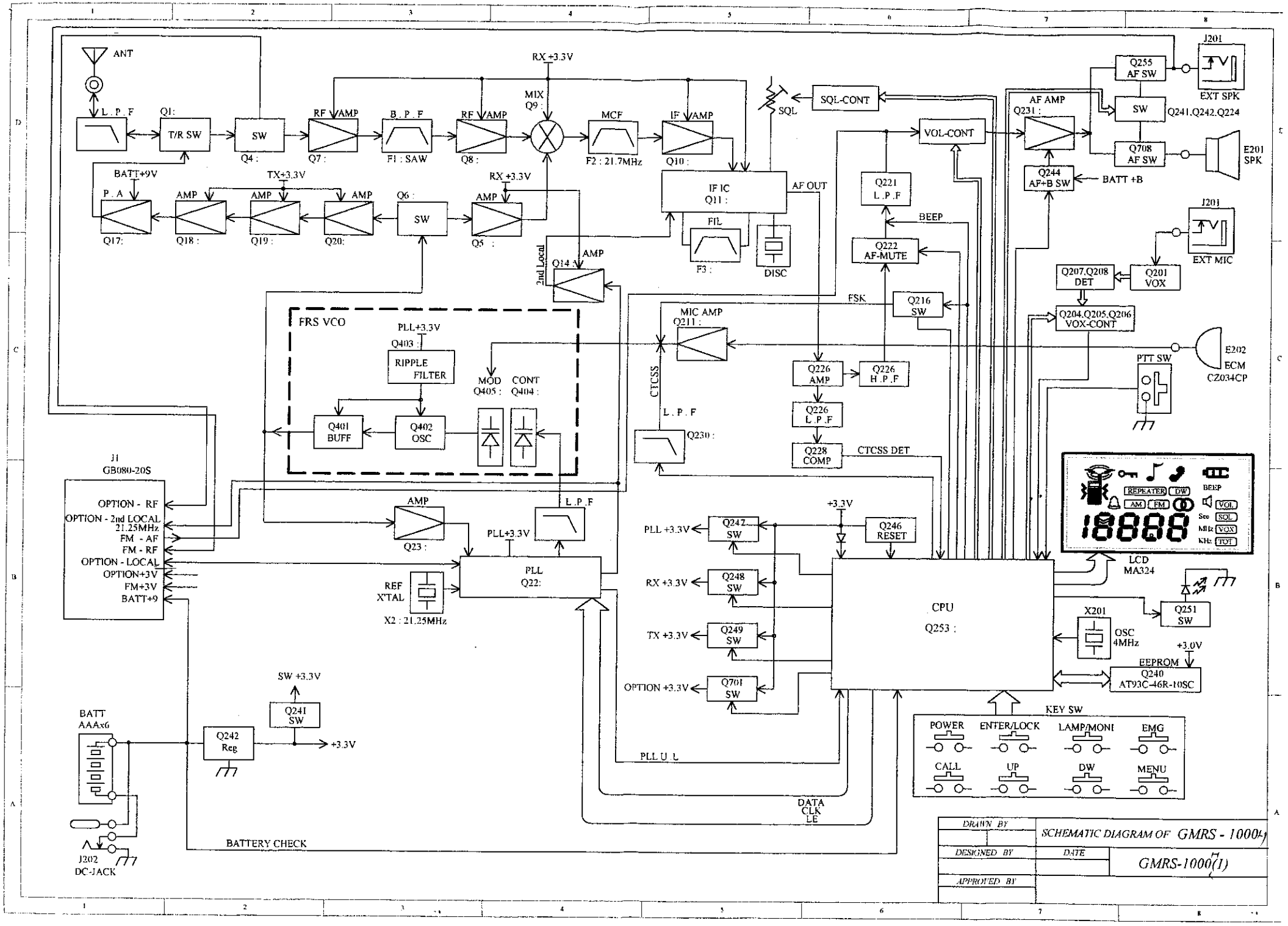
ANT
L.P.F
Q1:
T/R SW
SW
Q4 :
RF AMP
Q7 :
B.P.F
F1 : SAW
RF AMP
Q8 :
RX +3.3V
MIX
Q9 :
MCF
F2 : 21.7MHz
IF AMP
Q10 :
SQL
SQL-CONT
VOL-CONT
AF AMP
Q231 :
Q255
AF SW
J201
EXT SPK
SW
Q241,Q242,Q224
Q708
AF SW
E201
SPK
Q244
AF+B SW
BATT +B
BATT+9V
P.A
Q17:
AMP
Q18 :
TX+3.3V
AMP
Q19 :
AMP
Q20:
Q6 :
SW
RX +3.3V
AMP
Q5 :
IF IC
Q11 :
AF OUT
FIL
F3 :
DISC
Q221
L.P.F
BEEP
Q222
AF-MUTE
2nd Local
Q14 :
AMP
J201
EXT MIC
Q207,Q208
DET
Q201
VOX
FSK
Q216
SW
Q204,Q205,Q206
VOX-CONT
FRS VCO
PLL+3.3V
Q403 :
RIPPLE
FILTER
MOD
Q405 :
CONT
Q404 :
Q401
BUFF
Q402
OSC
MIC AMP
Q211 :
CTCSS
Q226
AMP
Q226
H.P.F
Q226
L.P.F
Q228
COMP
CTCSS DET
L.P.F
Q230 :
E202
ECM
CZ034CP
PTT SW
J1
GB080-20S
OPTION - RF
OPTION - 2nd LOCAL
21.25MHz
FM - AF
FM - RF
OPTION - LOCAL
OPTION+3V
FM+3V
BATT+9
AMP
Q23 :
L.P.F
PLL+3.3V
PLL
Q22:
REF
X'TAL
X2 : 21.25MHz
PLL +3.3V
Q247
SW
RX +3.3V
Q248
SW
TX +3.3V
Q249
SW
OPTION +3.3V
Q701
SW
+3.3V
Q246
RESET
CPU
Q253 :
LCD
MA324
Q251
SW
X201
OSC
4MHz
+3.0V
EEPROM
Q240
AT93C-46R-10SC
KEY SW
POWER
ENTER/LOCK
LAMP/MONI
EMG
CALL
UP
DW
MENU
PLL U L
DATA
CLK
LE
BATT
AAAx6
Q242
Reg
SW +3.3V
Q241
SW
+3.3V
J202
DC-JACK
BATTERY CHECK
DRAWN BY
DESIGNED BY
APPROVED BY
DATE
SCHEMATIC DIAGRAM OF GMRS - 1000(I)
GMRS-1000(I)

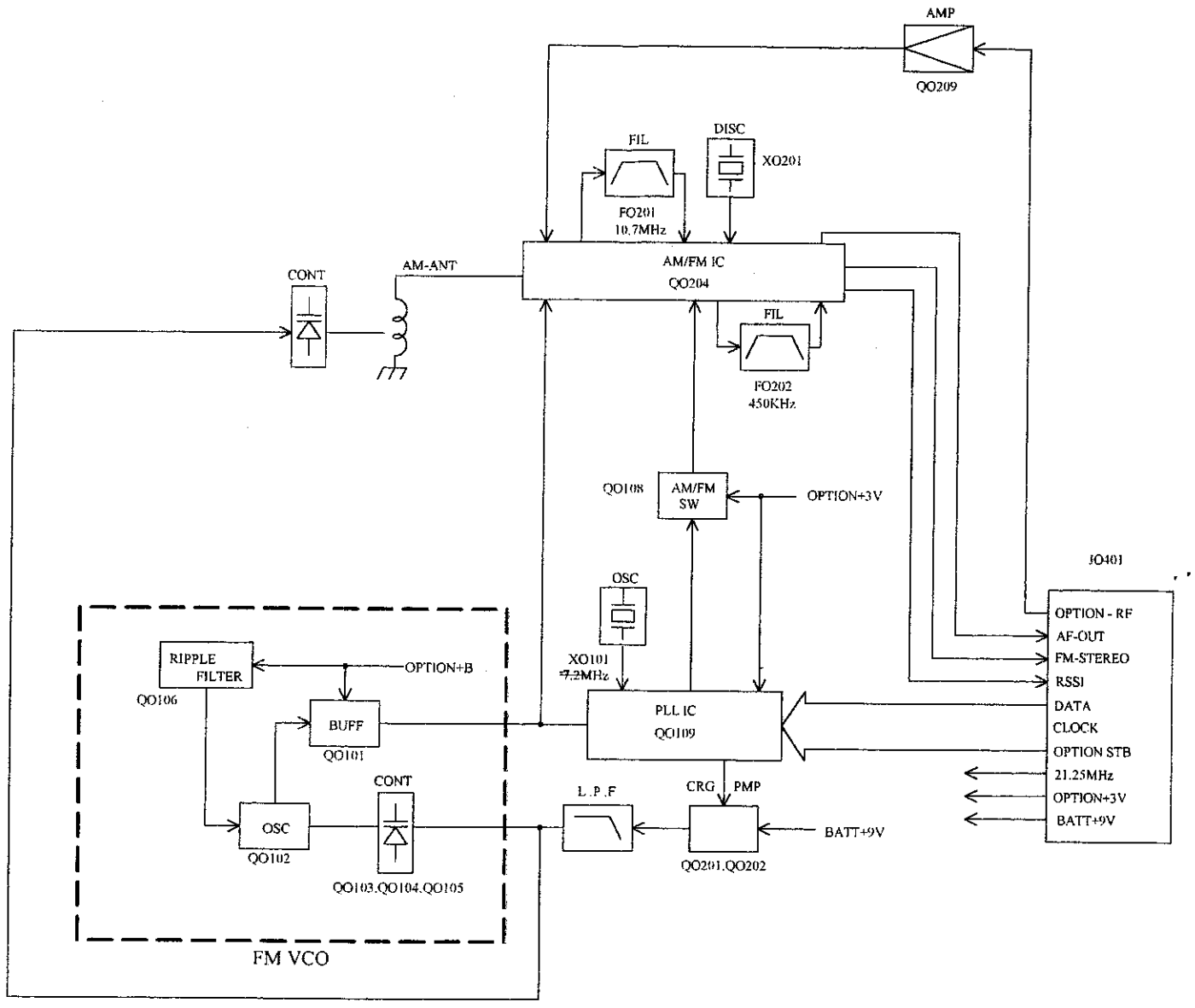

DRAWN BY	SCHEMATIC DIAGRAM OF	GMRS-1000
DESIGNED BY	DATE	GMRS-1000 (2)
APPROVED BY		