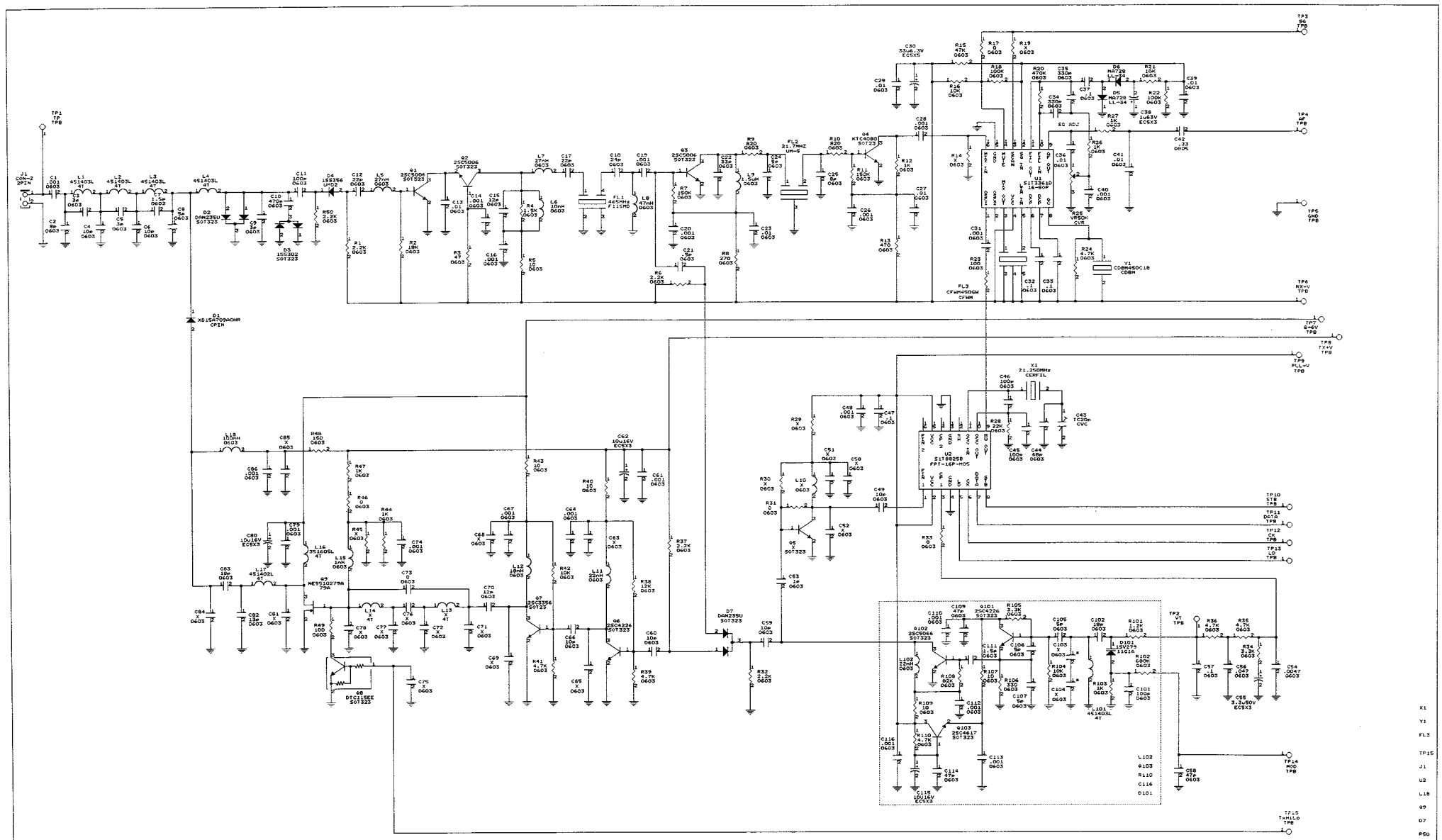

Musical Electronics Limited		
Title	GMRS1100 RF BOARD	
Size D	Document Number GMRS1RF.SCH	REV 1.0
Date: July 20, 2002	Sheet of	

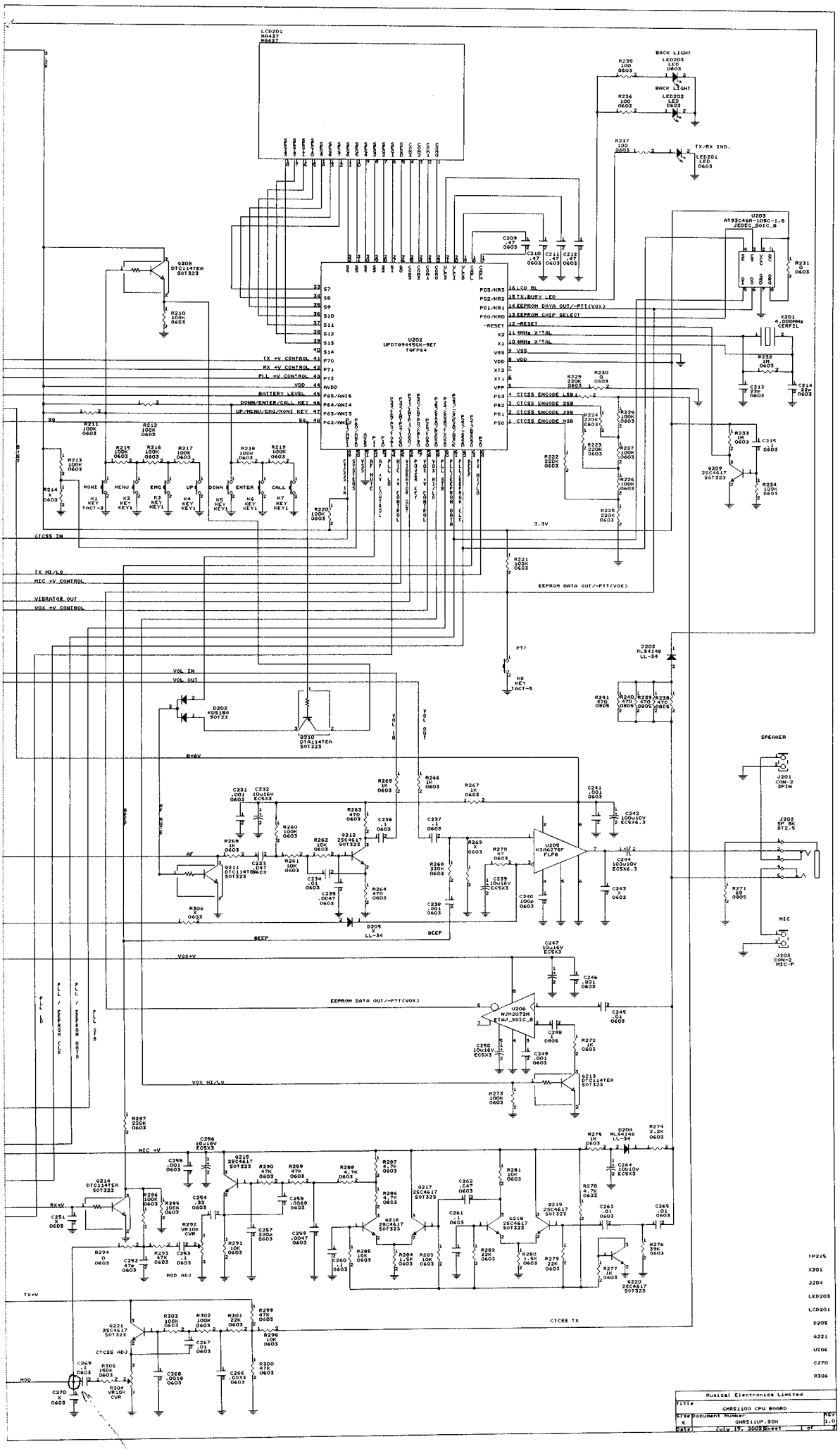
LCD201
BACK LIGHT
LED203
LED
BACK LIGHT
LED202
LED
TX/RX IND.
LED201
LED
U203
AT93C46R-10SC-1.8
JEDEC_SOIC_8
X201
4.000MHz
CERFIL
U202
UPD78944GK-9ET
TQFP64
TX +V CONTROL
RX +V CONTROL
PLL +V CONTROL
BATTERY LEVEL
DOWN/ENTER/CALL KEY
UP/MENU/EMG/MONI KEY
CTCSS ENCODE LSB
CTCSS ENCODE 2SB
CTCSS ENCODE 3SB
CTCSS ENCODE MSB
LCD BL
TX.BUSY LED
EEPROM DATA OUT/-PTT(VOX)
EEPROM CHIP SELECT
-RESET
4MHz X'TAL
VSS
VDD
3.3V
CTCSS IN
TX HI/LO
MIC +V CONTROL
VIBRATOR OUT
VOX +V CONTROL
PTT
VOL IN
VOL OUT
SPEAKER
J201
CON-2
2PIN
J202
SP SK
ST2.5
MIC
J203
CON-2
MIC-P
B+6V
BEEP
VOX+V
U206
NJM2072M
ETAJ_SOIC_8
VOX HI/LO
MIC +V
RX+V
MOD ADJ
TX+V
CTCSS TX
CTCSS ADJ
MOD
TP215
X201
J204
LED203
LCD201
D205
Q221
U206
C270
R306
Musical Electronics Limited
Title
GMRS1100 CPU BOARD
Size
E
Document Number
GMRS11UP.SCH
REV
1.0
Date:
July 19, 2002
Sheet
1
of
2

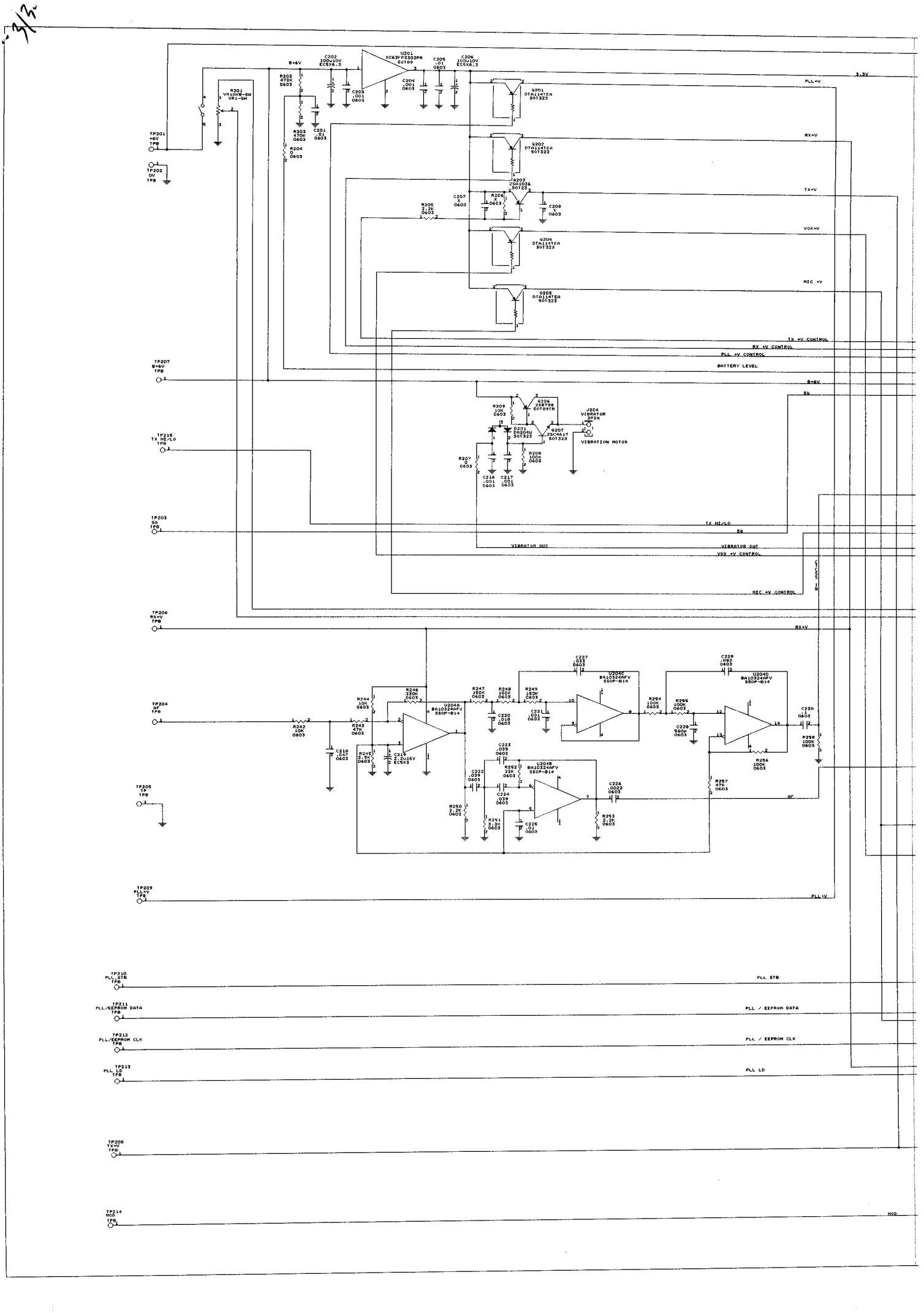
U201
XC62FP3302PR
SOT89
B+6V
C202
100u10V
EC6X6.3
C203
.001
0603
C204
.001
0603
C205
.01
0603
C206
100u10V
EC6X6.3
R202
470K
0603
R203
470K
0603
C201
.01
0603
R204
0
0603
R201
VR10KB-SW
VR1-SW
TP201
+6V
TPB
TP202
0V
TPB
3.3V
PLL+V
Q201
DTA114TEA
SOT323
RX+V
Q202
DTA114TEA
SOT323
TX+V
Q203
2SA1036
SOT23
R206
0
0603
C207
0
0603
C208
0
0603
R205
2.2K
0603
VOX+V
Q204
DTA114TEA
SOT323
MIC +V
Q205
DTA114TEA
SOT323
TX +V CONTROL
RX +V CONTROL
PLL +V CONTROL
BATTERY LEVEL
TP207
B+6V
TPB
B+6V
SQ
Q206
2SB798
SOT89TR
R209
10K
0603
D201
DB204U
SOT323
Q207
2SC4617
SOT323
J204
VIBRATOR
2P2N
VIBRATION MOTOR
R208
100K
0603
R207
0
0603
C214
.001
0603
C217
.001
0603
TP215
TX HI/LO
TPB
TP203
SQ
TPB
TX HI/LO
SQ
VIBRATOR OUT
VIBRATOR OUT
VOX +V CONTROL
MIC +V CONTROL
TP206
RX+V
TPB
RX+V
TP204
AF
TPB
R242
10K
0603
R243
47K
0603
R244
10K
0603
R245
3.9K
0603
C218
.047
0603
C219
2.2u16V
EC5X3
R246
330K
0603
U204A
BA10324AFV
SSOP-B14
R247
150K
0603
R248
150K
0603
R249
150K
0603
C220
.018
0603
C221
.001
0603
C227
.033
0603
U204C
BA10324AFV
SSOP-B14
R254
100K
0603
R255
100K
0603
C228
560P
0603
C229
.082
0603
U204D
BA10324AFV
SSOP-B14
R256
100K
0603
C230
1
0603
R258
100K
0603
C223
.039
0603
C222
.039
0603
R252
22K
0603
C224
.039
0603
U204B
BA10324AFV
SSOP-B14
C226
.0022
0603
R250
2.2K
0603
R251
2.2K
0603
C225
.01
0603
R253
2.2K
0603
R257
47K
0603
AF
TP205
TP
TPB
TP209
PLL+V
TPB
PLL+V
TP210
PLL STB
TPB
PLL STB
TP211
PLL/EEPROM DATA
TPB
PLL / EEPROM DATA
TP212
PLL/EEPROM CLK
TPB
PLL / EEPROM CLK
TP213
PLL LD
TPB
PLL LD
TP208
TX-V
TPB
TP214
MOD
TPB
MOD