TABULATED BILL OF MATERIALS	
PART NUMBER	DESCRIPTION
78-8117-4631-8	ASS'Y, G5 CONTROL POD - FCC
78-8117-4702-7	ASS'Y, G5 CONTROL POD - CE
78-8117-4717-5	ASS'Y, G5 CONTROL POD - JDECT
78-8117-4718-3	ASS'Y, G5 CONTROL POD - USDECT
78-8117-4719-1	ASS'Y, G5 CONTROL POD - EU DECT
78-8117-4720-9	ASS'Y, G5 CONTROL POD - LA DECT 1
78-8117-4739-9	ASS'Y, G5 CONTROL POD - LA DECT 2
78-8117-4865-2	Sub Assy, G5 CONTROL POD - Inner Case
78-8117-4866-0	Sub Assy, G5 CONTROL POD - Outer Case

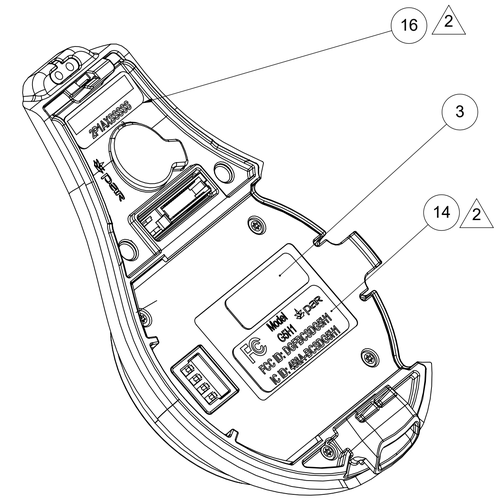

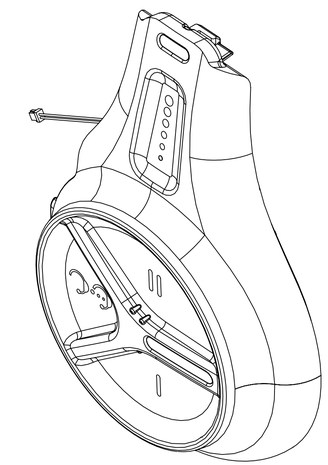

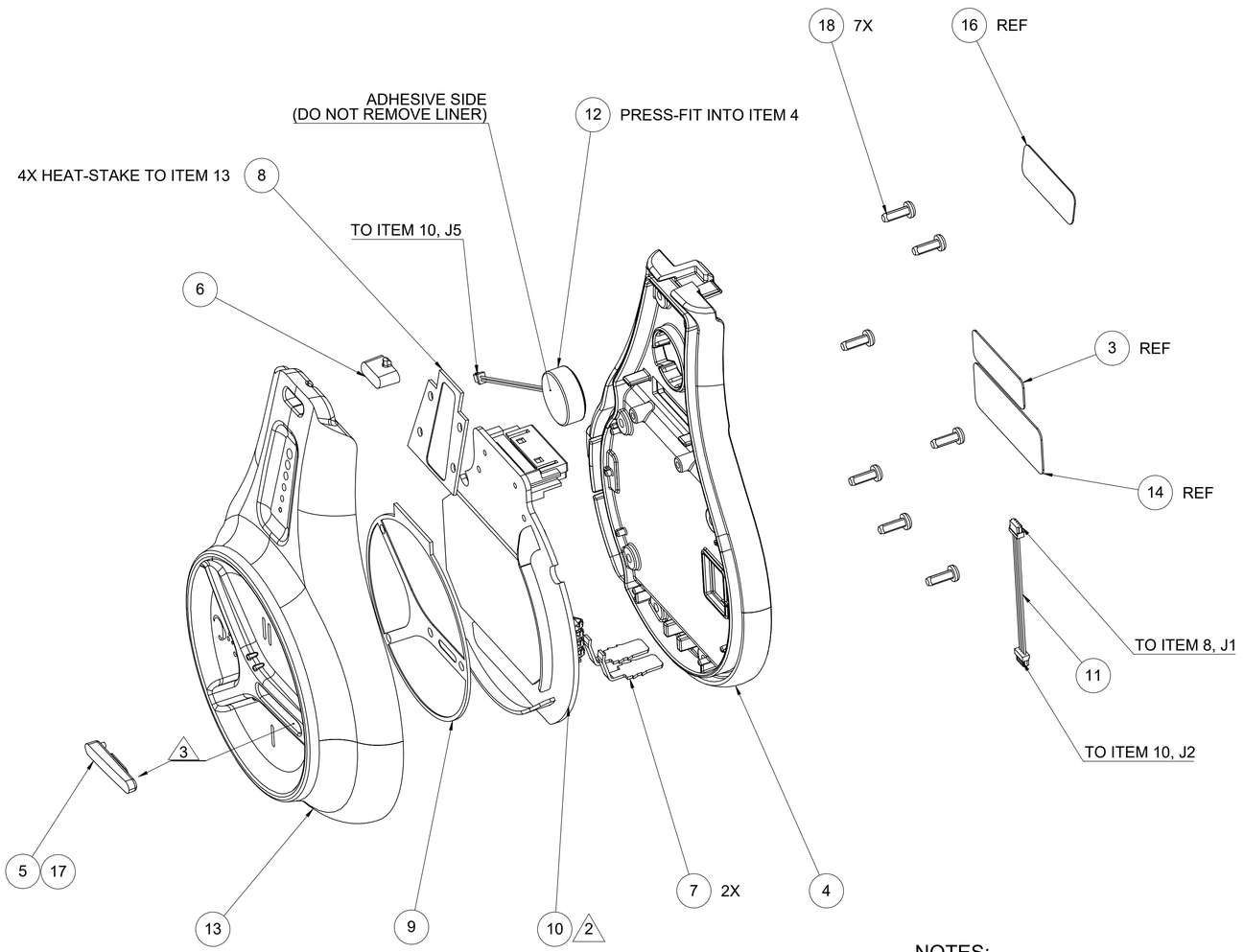

NOTES:

1. ITEM 14 NOT SHOWN ON ASSEMBLY

2. ITEM MAY VARY, SEE DETACHED BOM.

3. ADHERE ITEM 5 TO ITEM 13 USING SMALL AMOUNT OF ITEM 17 TO THE RIGHT SIDE OF OPENING.

REV	ECO	ISSUE DATE AND DESCRIPTION	DRFT	CHKD
E	105774	09/16/2020 - UPDATE TABULATED BILL OF MATERIALS ON DRAWING.	EBL	EBL
D	0083017	02/18/2019 - DELETE ITEM 1 (26-1021-3367-0), ITEM 18 QTY WAS 1.0.	CEN	SJE
C	0080091	07/27/2018 - ITEM 1 QTY WAS 7.0, ADD ITEM 18.	CEN	SJE
B	0065008	03/03/2016 - ADD ITEM 17 AND NOTE 3.	CEN	GWV
A	0061405	05/01/2015, REDRAWN AS TABULATED DWG.	CEN	SE

78-8117-4631-8
DESIGN REFERENCE

SEE ENOVIA
NEXT ASSEMBLY

DISTRIBUTION CODES

DRFT C. NORDLING DATE 05/01/2015
MFG G. VISICH DATE
CHKD S. ELLIOTT DATE
APPVL J. GARDNER DATE 05/01/2013

DIVISION

DIVISION CODE

DO NOT SCALE DRAWING

SCALE 2:1

TOLERANCES EXCEPT AS NOTED
INCHES
.0 ± NA
.00 ± NA
.000 ± NA
.0000 ± NA
MILLIMETERS
.0 ± NA
.00 ± NA
.000 ± NA
ANGLES ± 0.5°

FIRST ANGLE PROJECTION

INTERPRET PER ASME Y14.5 - 2009

Each homogenous material in this part meets the substance restrictions of EU RoHS Directive 2011/65/EU and its Annex II.

ParTech, Inc.
8383 Seneca Turnpike
New Hartford, NY 13413

THIS DOCUMENT CONTAINS PROPRIETARY INFORMATION OF PARTECH, INC AND SHALL NOT BE DISCLOSED TO ANY THIRD PARTY, OR USED FOR ANY PURPOSE OTHER THAN THAT FOR WHICH IT WAS SUPPLIED, OR REPRODUCED WITHOUT WRITTEN CONSENT OF PARTECH, INC

TITLE
G5 CONTROL POD ASSEMBLY - FCC

CAGE NUMBER
SIZE D
DRAWING NO. 78-8117-4743-1
REV. E

MODEL

DET LISTS ☐ YES ☒ NO

SHT 1 OF 1

78-8117-4743-1 DRAWING NUMBER
E REVISION