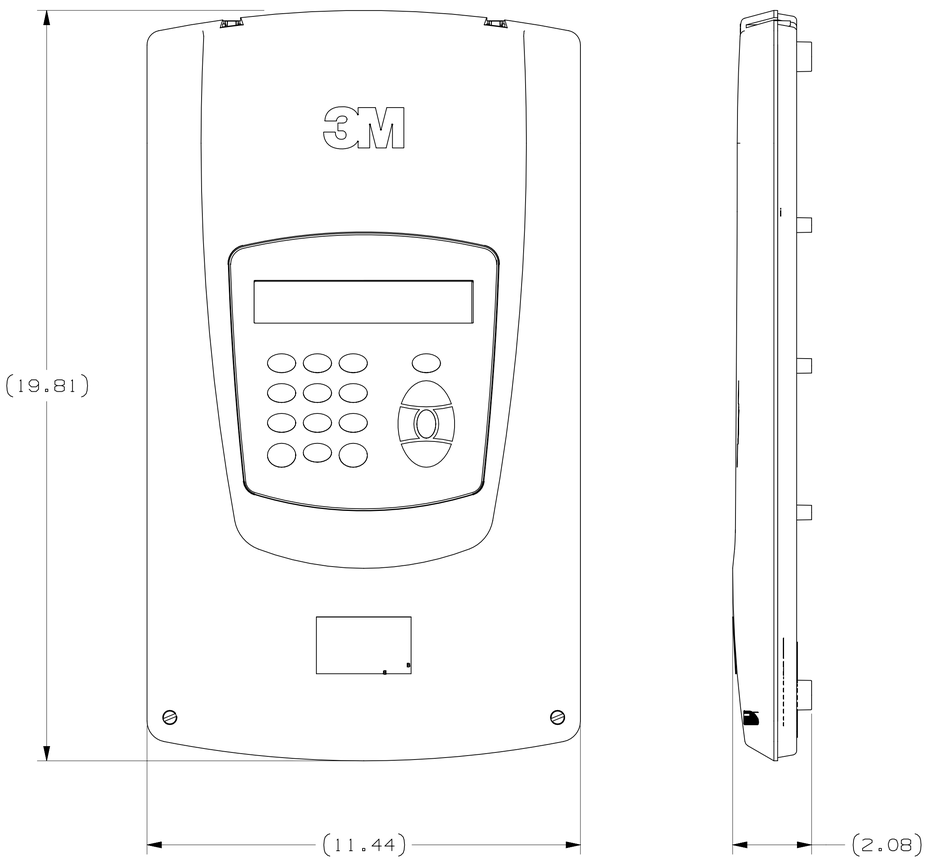

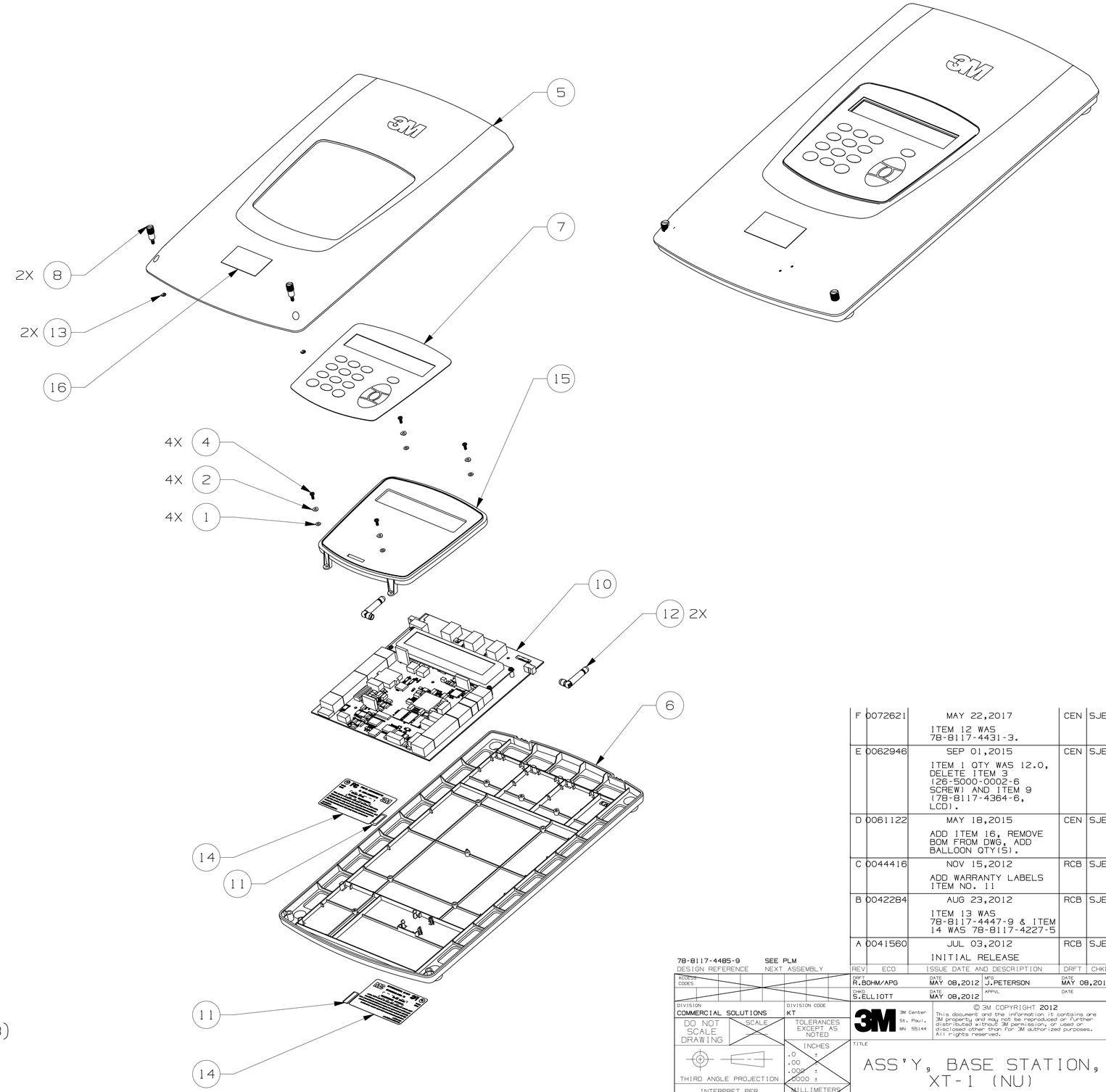

REV	ECO	ISSUE DATE AND DESCRIPTION	DRFT	CHKD
F	0072621	MAY 22,2017 ITEM 12 WAS 78-8117-4431-3.	CEN	SJE
E	0062946	SEP 01,2015 ITEM 1 QTY WAS 12.0, DELETE ITEM 3 (26-5000-0002-6 SCREW) AND ITEM 9 (78-8117-4364-6, LCD).	CEN	SJE
D	0061122	MAY 18,2015 ADD ITEM 16, REMOVE BOM FROM DWG, ADD BALLOON QTY(S).	CEN	SJE
C	0044416	NOV 15,2012 ADD WARRANTY LABELS ITEM NO. 11	RCB	SJE
B	0042284	AUG 23,2012 ITEM 13 WAS 78-8117-4447-9 & ITEM 14 WAS 78-8117-4227-5	RCB	SJE
A	0041560	JUL 03,2012 INITIAL RELEASE	RCB	SJE

78-8117-4485-9 DESIGN REFERENCE

SEE PLM NEXT ASSEMBLY

ACCESS CODES

DRWN R.BOHM/APG DATE MAY 08,2012 MFG J.PETERSON DATE MAY 08,2012

CHKD S.ELLIOTT DATE MAY 08,2012 APPVL DATE

DIVISION COMMERCIAL SOLUTIONS

DIVISION CODE KT

DO NOT SCALE DRAWING

SCALE

TOLERANCES EXCEPT AS NOTED

INCHES
.0 ±
.00 ±
.000 ±
.0000 ±

THIRD ANGLE PROJECTION

INTERPRET PER ASME Y14.5 - 2009

MILLIMETERS
0 ±
.0 ±
.00 ±
.000 ±

MAX SURFACE ROUGHNESS
☐ ALL SURFACES
☐ MARKED ONLY

ANGLES ±1°

© 3M COPYRIGHT 2012
This document and the information it contains are 3M property and may not be reproduced or further distributed without 3M permission, or used or disclosed other than for 3M authorized purposes. All rights reserved.

3M Center St. Paul, MN 55144

TITLE

ASS'Y, BASE STATION, XT-1 (NU)

CAGE NUMBER | SIZE D | DRAWING NO. 78-6911-5068-0 | REV. F

MODEL XT-1 | DET. LISTS ☒ YES ☐ NO | SHT 1 OF 1

78-6911-5068-0 DRAWING NUMBER

F REVISION