ERICSSON

RBS 884 Micro (1900 MHz) Installation and Hardware Replacement Manual

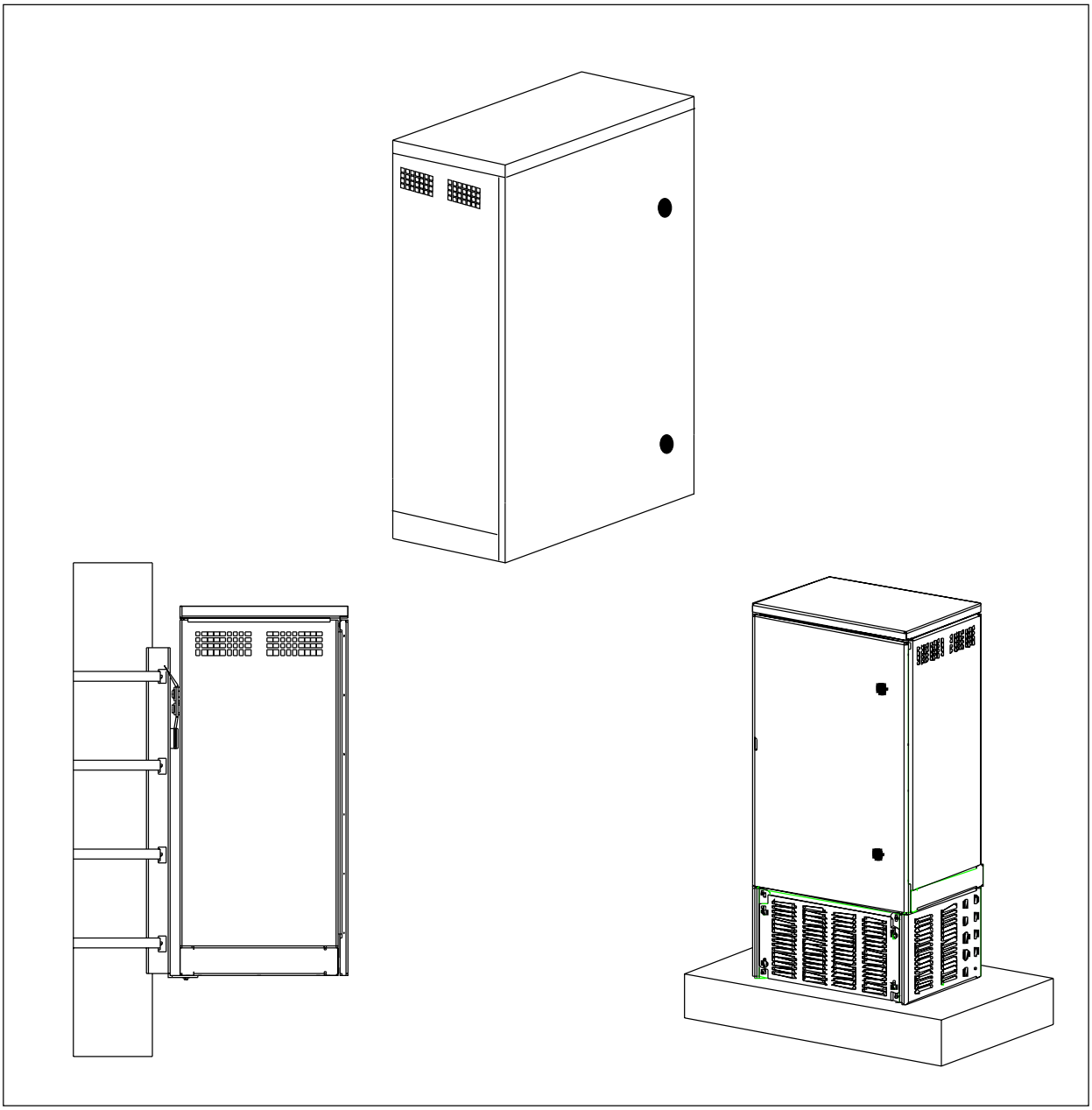

EN/LZB 119 3312 PA4 1998-10-05

© Ericsson Radio Systems AB 1998 All Rights Reserved

The contents of this document are subject to revision without notice due to continued progress in methodology, design, and manufacturing.

Ericsson shall have no liability for any error or damages of any kind resulting from the use of this document.

Part 1	**Introduction**		**1-1**
	1	Revision Information	1-1
	2	About This Manual	1-1
	3	Conventions Used in the Manual	1-2
Part 2	**General Product Information**		**2-1**
	1	Introduction	2-3
	2	Features	2-3
	3	Product Lines	2-4
	4	Architecture	2-6
Part 3	**System Description**		**3-1**
	1	Introduction	3-3
	2	RBS 884 Micro (1900 MHz)	3-3
	3	Installation Configurations	3-18
Part 4	**Installation**		**4-1**
	1	Introduction	4-3
	2	Safety Considerations	4-3
	3	Electrostatic Discharge (ESD)	4-5
	4	Tools	4-6
	5	Site Selection	4-7
	6	Transportation and Storage	4-8
	7	Unpacking	4-9
	8	Cabinet Installation	4-12
	9	Cable and Power Connections	4-22
	10	Setting the Unit Switches	4-34
	11	External Cable Installation	4-45
	12	Site Inventory	4-53
	13	Equipment Power Up	4-54
	14	Cold Start-up	4-57
	15	Completing the Installation	4-58
	16	LED Indications	4-59
	17	Site Expansion	4-64
	18	RBS 884 Micro (1900 MHz) Cabinet Repainting	4-83
Part 5	**Hardware Replacement**		**5-1**
	1	Introduction	5-3
	2	Safety Considerations	5-3
	3	Product Handling and Inspection	5-6
	4	General Troubleshooting	5-6
	5	Alarm Troubleshooting	5-11
	6	RBS Unit Hardware Replacement	5-14

Part 6 **Glossary of Terms** **6-1**
Part 7 **Acronyms and Abbreviations** **7-1**
Appendix A **Documentation Overview** **A-1**
Appendix B **User Feedback** **B-1**
Appendix C **Internal Cables** **C-1**
Appendix D **Conversion Table** **D-1**

Part 1

Introduction

This part describes the information contained in the manual and the conventions used in its presentation.

1 Revision Information

This is the first issue of the Installation and Hardware Replacement Manual (IHRM) for Radio Base Station (RBS) 884 Micro (1900 MHz).

2 About This Manual

This manual contains information required to install, troubleshoot, and maintain the RBS 884 Micro (1900 MHz).

The target audience for the manual is RBS site installation and site maintenance personnel.

Before the IHRM is used to perform any installation or maintenance activities at a radio base station site, the following actions must be completed:

- Telephone transmission facilities must have been made available and tested
- AC, DC voltage or both must have been made available
- The antenna system must have been installed and tested
- Grounding system available

When the radio base station equipment has been installed and tested using the information in this manual, it will remain powered up and ready for integration into the network by personnel at the Mobile Switching Center (MSC).

The manual is divided into the following parts:

- Introduction – a description of the contents of the manual and how the manual can be used.
- General Product Information — a description focused on the radio base station itself in general terms. This means that it describes an unconfigured base station, not a working Radio Base station (RBS).

- System Description – a description of the RBS 884M equipment hardware and the available configurations.
- Installation – procedures for the installation and powering up of RBS 884M equipment on site.
- Maintenance – procedures for basic troubleshooting and replacement of faulty items of equipment.
- Glossary of Terms – definitions of key terms used in the manual.
- Acronyms and Abbreviations – expanded versions of all of the acronyms and abbreviations used in the manual.
- Document Overview (Appendix A) — This appendix provides an overview of the existing customer manuals for RBS 884, the work procedures covered by the manuals, and the recommended use of the manuals.
- User Feedback (Appendix B) — This appendix provides information on ordering and trouble reporting for the RBS 884 customer manuals.
- Internal Cables (Appendix C) – description of the internal cables within each RBS cabinet. These cables are installed at the factory.
- Conversion Table (Appendix D) — table for translating some SI units to American units

Many of the procedures in the manual require site-specific data from the *Site Installation Documentation* relating to the particular radio base station site.

The procedures in the manual are intended to be performed in the order presented.

3 Conventions Used in the Manual

The first time an acronym or abbreviation appears in the manual, the expanded form is shown, followed by the acronym or abbreviation in parentheses, for example, Mobile Switching Center (MSC).

The abbreviated form is shown without parentheses when the expanded form is not used.

A list of acronyms and abbreviations can be found in Part 8.

Names of documents are referred to in italic typeface, for example, *Site Installation Documentation*.

Part 2

General Product Information

1 Introduction 2-3

2 Features 2-3

3 Product Lines 2-4

3.1 RBS 884 Macro 2-4

3.2 RBS 884 Micro 2-5

3.3 RBS 884 Compact 2-6

4 Architecture 2-6

1 Introduction

The *General Product Information* provides general information on unconfigured radio base stations. See *Site Engineering Manual* for descriptions of the available working base station configurations and for information on RBS interfaces (for instance power, transmission, and antennas).

2 Features

The RBS 884 Series is a series of products in the CMS 8800 family. The products in the RBS 884 Series are **fully featured modular radio base stations** for both the analog AMPS EIA 553 and the digital D-AMPS EIA IS 136 systems (Advanced Mobile Phone System Electronics Industry Association 553 system and Digital American Mobile Phone System Electronics Industry Association Interim Standard 136 system).

A base station in the RBS 884 Series can **support one, two, or three cells**. A cell is a defined area covered by one antenna system, and each cell has one control channel for digital or one for analog, or both. There is one cell at an omni site, and one to three cells at a sectorized site.

The RBS 884 Series utilizes **multi-mode, multi-functional transceivers** (TRX). The same hardware TRX module can be used for analog and digital voice, control and monitoring purposes.

The **hot repair capability**, replacement of defective units when power is still applied, allows repair to be carried out on an RBS in operation during normal scheduled maintenance visits.

The RBS 884 Series is designed for **remote control monitoring** allowing control and fine tuning of all functions and parameters, such as power output, frequencies, and switching of redundant units from the Mobile Switching Center (MSC).

A Radio Frequency Test Loop (RFTL) is an optional feature which enables **precise output power settings**, Voltage Standing Wave Ratio (VSWR) alarm and Receive Signal Strength Indicator (RSSI) **test measurements**.

The device software is stored in non-volatile memory within the RBS, and the control part software is downloaded from the (MSC), which ensures a **short time to service at power-up**.

3 Product Lines

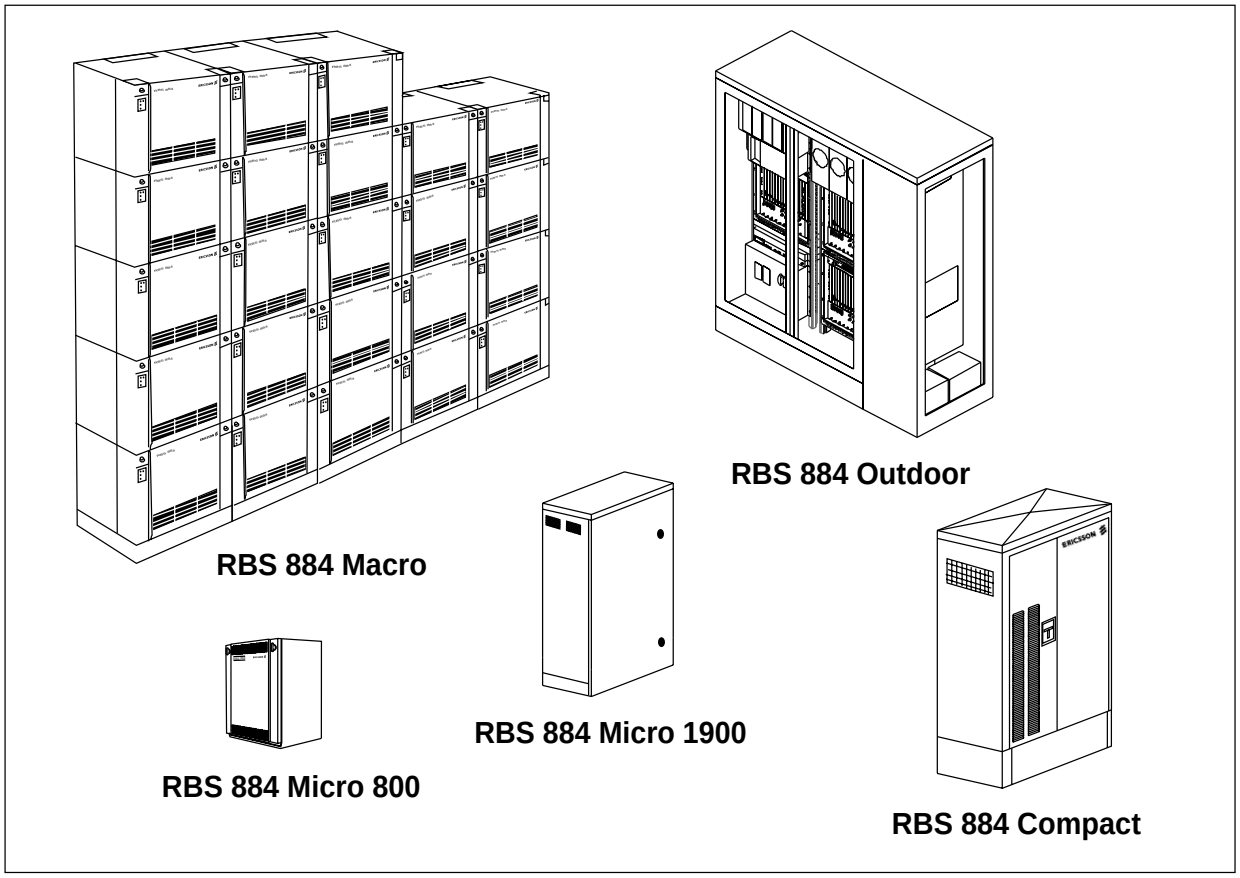

Figure 2-1. Product Lines in the RBS 884 Series

The RBS 884 Series includes product lines for macro and micro cells.

Note: The maximum number of carriers for each sector stated is the technical limitation for the defined standard configurations. The practical usable sector sizes may be limited by the frequency plan. The capacity of all product lines, with the exception of the RBS 884 Micro (1900 MHz) is calculated for analog systems. The capacity of the RBS 884 Micro (1900 MHz) is calculated for digital systems. See the integration information in the *RBS 884 Operations and Maintenance Manual* for system limitations in digital systems.

3.1 RBS 884 Macro

The macro cell products are intended for normal indoor installations and are built up on-site with a number of cabinets of uniform size and design.

The **RBS 884 Macro 800 MHz** supports AMPS and digital D-AMPS. Operates at 824–894 MHz and provides up to 78 low power or medium

power transceivers (3x24 carriers), or up to 96 high power and 6 low power transceivers (3x32 carriers).

The **RBS 884 Macro 1900 MHz** supports digital D-AMPS and operates at 1850–1990 MHz (A-, B-, or C-band). It provides up to 48 medium power transceivers (3x15 carriers).

A special configuration, Self Contained Cell Site (SCCS), providing up to 8 transceivers in three sectors (3x7 carriers) can be installed in an outdoor container.

The **RBS 884 Macro DBC** supports digital D-AMPS and is applicable to frequencies at 806–860 MHz. Up to 39 medium power transceivers (3x12 carriers) can be used in one installation.

3.2 RBS 884 Micro

The micro cell products can be used wherever local capacity or coverage is needed.

The **RBS 884 Micro 800 MHz** is intended for indoor installation, and typical applications include convention centers, office buildings, parking areas and tunnels. The RBS 884 Micro comprises one small main cabinet and two possible expansion cabinets of the same size. It is a completely functional cell, with drop and insert transmission interface and RF equipment built-in. Up to 10 1.5W transceivers can be used in one cabinet (8 carriers). Up to 30 transceivers can be provided with two auxiliary cabinets (24 carriers). This gives a total capability of up to 23 analog or 68 digital voice channels (71 with E1 PCM links).

The **RBS 884 Micro with MCPA (800 MHz)**supports analog AMPS EIA 553 and digital D-AMPS EIA IS 136 and operates at 824–894 MHz. It is a standard RBS 884 Micro (800 MHz) equipped with a Multi Carrier Power Amplifier (MCPA) for higher output power in one cell. The MCPA is a separate cabinet, that is mounted below the RBS 884 Micro (800 MHz) cabinet. Up to three RBS 884 Micro (800 MHz) cabinets and one MCPA can be mounted in a 19 inch rack cabinet. An RBS 884 Micro with MCPA (800 MHz) can provide up to 23 analog or 68 digital voice channels (71 with E1 PCM links) in one cell.

The **RBS 884 Micro Outdoor (800 MHz)**supports analog AMPS EIA 553 and digital D-AMPS EIA IS 136 and operates at 824–894 MHz. Designed for outdoor use, it is contained in an all-weather steel enclosure with an environmentally-controlled interior and can be installed in a wide variety of locations and climatic zones. The RBS 884 Micro (800 MHz) cabinets and one MCPA. This means that up to 26 transceivers can be provided with a total of 24 carriers, which gives a total capacity of up to 23 analog or 68 digital voice channels (71 with E1 PCM links).

The **RBS 884 Micro (1900 MHz)** supports digital D-AMPS EIA IS 136 and operates at 1850–1910 MHz. The RBS 884 Micro (1900 MHz) is a self-contained base station intended primarily for outdoor use. The cabinet

is cooled directly with outdoor air, using a combination of variable speed blowers and a variable power heated to maintain the cabinet air temperature within equipment operating limits. Typical applications include ‘hot spot’ areas within mature 1900 MHz networks and areas not covered by the RBS 884 Macro. The RBS 884 Micro (1900 MHz) is comprised of one small main cabinet and up to two auxiliary primary cabinets of the same size. The cabinets can be easily mounted on poles, on the sides of buildings, on rooftops, or on concrete pads. The RBS 884 Micro is a complete functional cell, with drop and insert transmission interface and built-in RF equipment. Up to 5 transceivers can be used in one cabinet providing 4 carriers. Up to 15 transceivers can be used in a three-cabinet installation providing 3x4 carriers. The three-cabinet installation allows up to 33 digital traffic channels.

The **RBS 884 Micro with MCPA** is a standard RBS Micro 884 equipped with a Multi Carrier Power Amplifier (MCPA) for 30 W normal output power in one cell. The MCPA is a separate cabinet a bit smaller than the RBS 884 Micro cabinet. The cabinets can be mounted on a wall, and one up to three cabinets and one MCPA can be mounted in a standard 19 inch rack cabinet or Telco rack. An RBS 884 Micro with MCPA can provide up to 23 analog or 68 digital voice channels (71 with E1 PCM links) in one cell.

3.3 RBS 884 Compact

The **RBS 884 Compact** can be compared to the Micro, but is intended for outdoor installations. It is contained in an all-weather steel cabinet with an environmentally-controlled interior and can be installed in a wide variety of locations and climatic zones. The RBS 884 Compact consists of one primary cabinet and two possible expansion cabinets of the same size. It is a completely functional cell with drop and insert transmission interface and RF equipment built-in. Up to 10 low power transceivers can be used in one cabinet (8 carriers). Up to 30 transceivers can be provided with two auxiliary cabinets (24 carriers). This gives a total capability of up to 23 analog or 68 digital voice channels (71 with E1 PCM links).

4 Architecture

The radio base station cabinet contains the equipment needed to control and handle the communication between the MSC and the mobile stations. The configuration of equipment in a specific system depends on the number of sectors, the number of voice channels in each sector, the transmit power, the frequency band, the number and type of antennas, and if the site is all analog, mixed analog and digital, or all digital. Figure 2-2 on page 2-7 shows the main connections to and from an RBS.

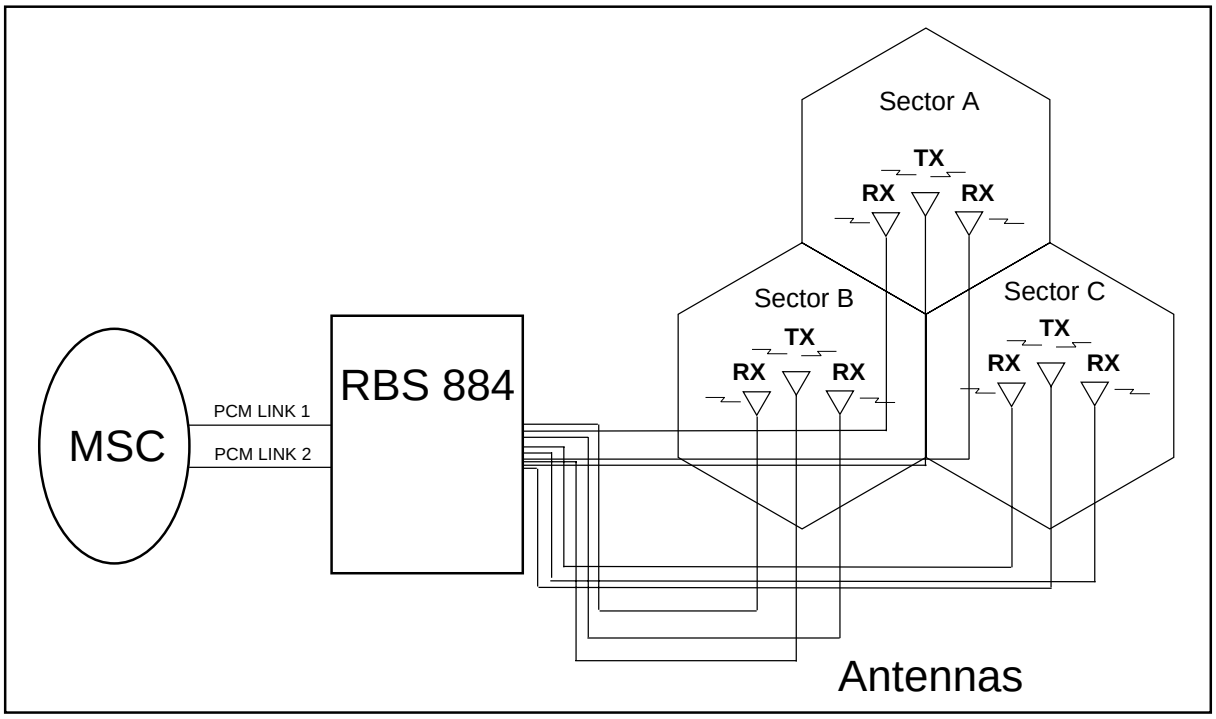

Figure 2-2. General Overview of MSC – RBS – Antenna Connections (Three-Sector Configuration)

The group switch is responsible for switching calls between subscribers. The calls may be between two mobile subscribers or between a mobile subscriber and a subscriber in the public telephone network. In the RBS, there are several regional processors, controlled by and working with the central processor. The regional processors control the switch and the transceivers in the base station. The switch in the base station makes sure that the speech signals from the MSC are connected to the correct transceiver. The transceivers generate radio signals emitted by the base station antenna to the mobile stations. The semipermanent connections are set up in the MSC. Each TRX handles three digital speech channels, but uses only one channel on the PCM link.

Figure 2-3 on page 2-8 shows the logical parts of an RBS.

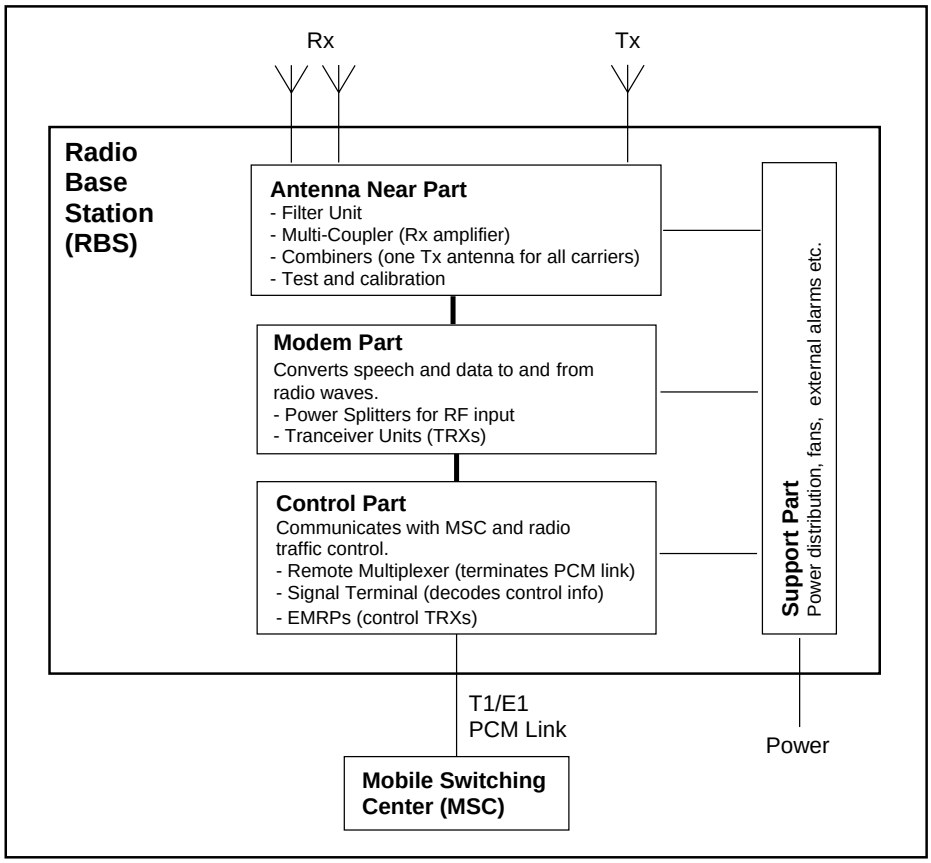

Figure 2-3. Block Diagram of a Radio Base Station

- The Control Part (COP) provides communication between the (MSC) and the (RBS) hardware for radio traffic control and statistical data gathering. In the RBS 884 Macro the control part consists of Control and Radio Interface (CRI) cabinet. In Micro and Compact the Control Part consists of the Remote Multiplexer (REMUX), Signaling Terminal Remote, Micro (STRM), Extension Module Regional Processor, Micro (EMRPM), and Connection (CONN) boards.

- The Modem Part (MOP) converts digitized speech and data into radio frequency signals, hosts channel coding and decoding functions and performs measurements on radio transmission quality. It is comprised of transceiver modules (TRXs) in the RBS and voice coders (TRABs) in the MSC. In the RBS 884 Macro the modem part consists of the Transceiver cabinet (TCB) and in the RBS 884 Micro and Compact the MOP consists of TRX boards.

- The Antenna Near Part contains components associated with the RF signal paths, such as auto-tuned combiners, power splitters, multicouplers, and bandpass filters. The main functions are to combine multiple TRX output signals to a single Tx antenna, to filter Tx and Rx signals, to pre-amplify and distribute Rx signals, to protect TRXs from reflected power, to provide isolation between the TRXs and to calibrate and supervise the TRXs and associated RF components. In the RBS 884 Macro the antenna near part consists of the Antenna Near Part Cabinet (ANPC) and the Auto-tuned Combiner Cabinet (ATCC). In the RBS 884 Micro (800 MHz) and in the RBS 884 Compact it consists of a number of boards (RFTL, MC, COMBFILT and CABCOMB). In the RBS 884 Micro (1900 MHz) the ANP, bandpath filters, and Radio Frequency Test Loop (RFTL) are integrated into a single hardware unit. The combined ANP/RFTL/ Filter unit provides RSSI measurement, output power measurement and calibration, VSWR supervision, and RF path testing.
- The Support Part provides general support, such as power supply and cooling. The components of this part vary significantly between the product lines.

Part 3

System Description

1 Introduction 3-3

2 RBS 884 Micro (1900 MHz) 3-3

2.1 Cabinet Layout 3-3
2.2 Power Distribution Box 3-6
2.3 Equipped Microbase Subrack (EMBS) – Main Cabinet 3-7
2.4 Equipped Microbase Subrack (EMBS) – Primary Cabinet 3-11
2.5 Remote Multiplexer (REMUX) 3-13
2.6 Extension Module Regional Processor, Micro (EMRPM) 3-14
2.7 Transceiver (TRX) 3-15
2.8 Antenna Near Part (ANP)/Radio Frequency Test Loop (RFTL) 3-16
2.9 Environmental Control Unit 3-17
2.10 Fans 3-17
2.11 Air Filter 3-18

3 Installation Configurations 3-18

3.1 Limitations 3-18
3.2 Standard Configurations RBS 884 Micro(1900 MHz) 3-18

1 Introduction

The *System Description* part of the manual describes the RBS 884 Micro (1900 MHz) equipment hardware and the available configurations.

2 RBS 884 Micro (1900 MHz)

Hardware specifications for the RBS 884 Micro (1900 MHz) are described in the following section. Figure 3-1 on page 3-3 is an exterior view of the cabinet.

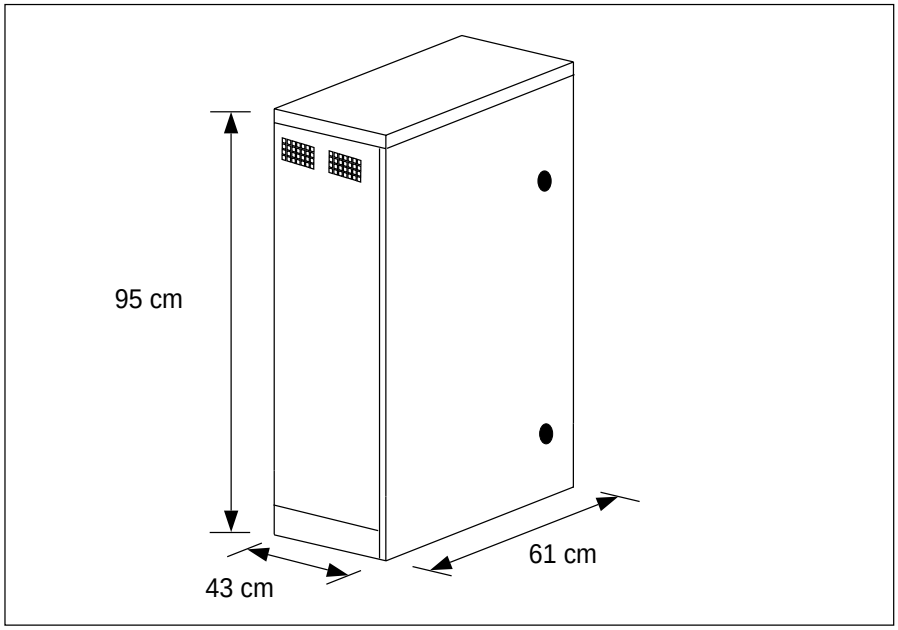

Figure 3-1. RBS 884 Micro (1900 MHz) Exterior View of Cabinet

2.1 Cabinet Layout

The RBS 884 Micro (1900 MHz) base station cabinet provides mechanical support, electrical interconnection, cooling, and environmental protection for the RBS 884 modules and components. All base station equipment wiring and cabling is easily accessible from the front of the unit. The electronic cards and modules plug into the backplanes of the electronics subrack and the subrack is cooled directly with outside air. The RBS equipment is protected from the external climatic variations by use of the environmental control system that supplies the internal modules with 10°C – 45°C cooling air during normal operation. Figure 3-2 on page 3-4 shows the cooling airflow pattern that is established by the environmental control system. Cabinet siting must allow for adequate airflow space and cable access and routing space to the bottom of the cabinet.

The RBS 884 Micro (1900 MHz) external cabinet shell is constructed of aluminum and finished with a polyester powder paint. The exterior of the cabinet can be refinished by the customer. Refinishing and repainting information is provided in the *Installation and Hardware Replacement Manual*. The corrosion warranty does not apply to refinished cabinets.

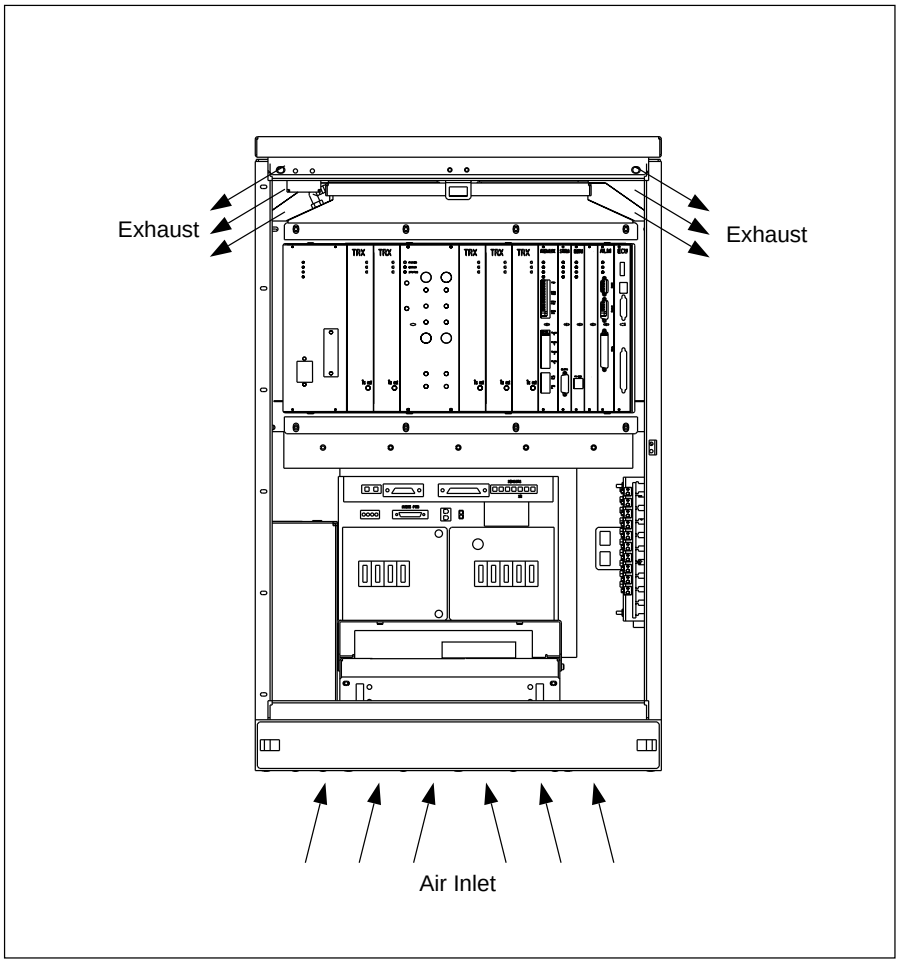

Figure 3-2. RBS 884 Micro (1900 MHz) With Cooling Airflow Pattern

The RBS 884 Micro (1900 MHz) is comprised of one main cabinet and up to two auxiliary primary cabinets, as follows:

- **Main Cabinet** is used in all configurations. The main cabinet provides up to four digital TRXs and one Digital Verification Module (DVER). The four TRXs offer a total of 11 Digital Traffic Channels (DTCs) and one Dedicated Control Channel (DCCH).
- **Auxiliary Primary Cabinet** has a dedicated antenna system and is used to create an additional sector within an omni cell. The auxiliary primary cabinet provides up to four digital TRXs and one DVER device. The four TRXs offer a total of 11 DTCs and one DCCH. The primary cabinet requires an EMRPM transmission link connection to the main cabinet.

The RBS 884 Micro (1900 MHz) main cabinet contains the following (See Figure 3-3 on page 3-6):

- Power Distribution Box
- Equipped Microbase Subrack (EMBS)
  - Antenna Near Part (ANP) includes the integrated filter unit and the Radio Frequency Test Loop (RFTL)
  - Power Supply Unit (PSU)
  - Remote Multiplexer (REMUX)
  - Environmental Control Unit (ECU)
  - Transceivers (5) (TRX), including 1 Digital Verification Module (DVER)
  - Extension Module Regional Processor, Micro (EMRPM)
  - Dummy EMRPM or Blank Module
  - Signaling Terminal Regional, Micro (STRM)
  - Alarm Board (ALM)
- Fans (4)
- Heater
- AC surge suppressor
- Backup batteries
- Heater for backup batteries
- PCM surge suppressor units (primary and secondary)
- Antenna connector plate or I/O plate with integral quarter wave shorting stubs for lightning protection
- Optional air filter

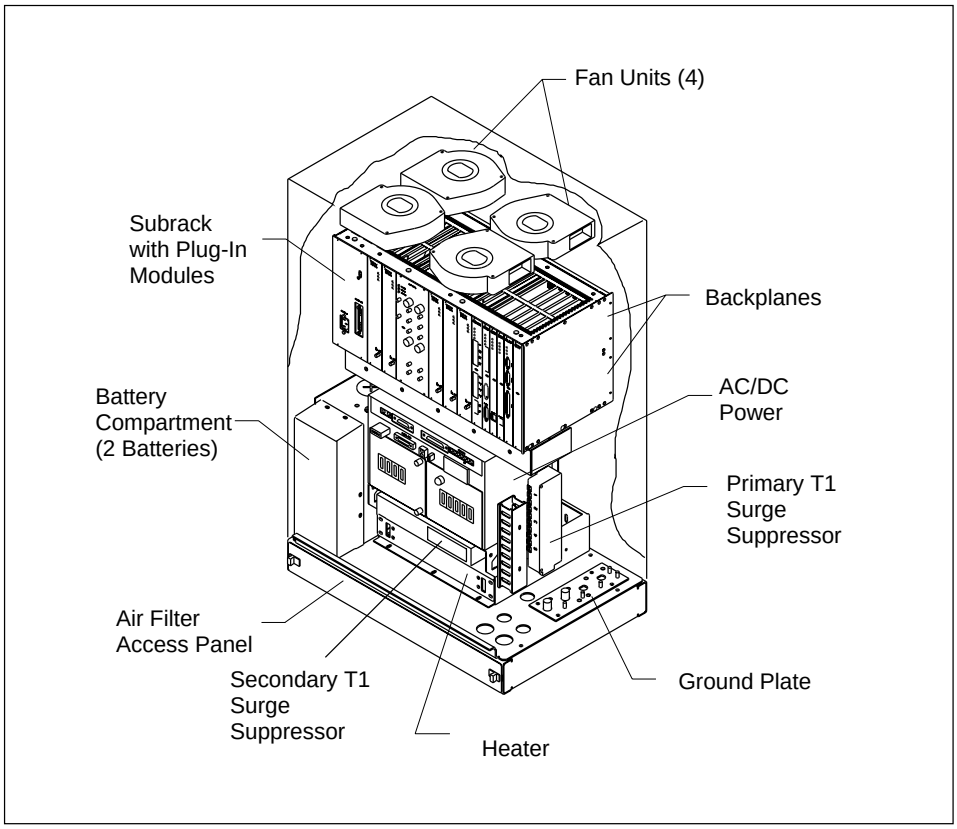

Figure 3-3. RBS 884 Micro (1900 MHz) Fully-Equipped Cabinet

2.2 Power Distribution Box

The power distribution box supplies the RBS equipment with the AC and DC supply voltages. See Figure 3-4 on page 3-7

The power distribution box contains the following:

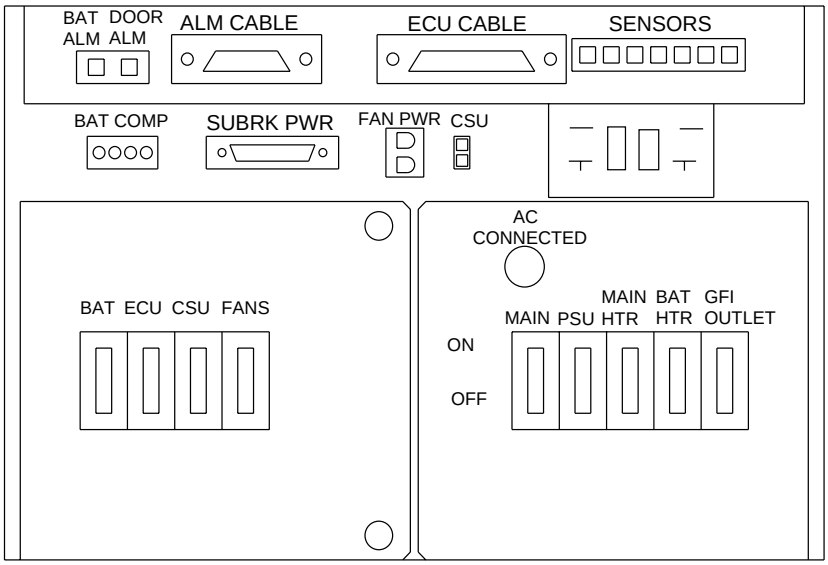

Figure 3-4. RBS 884 Micro (1900 MHz) Power Distribution Box Front Panel

- DC and alarms distribution panel
- DC and AC breakers
- AC mains
- AC surge connection
- Control board with connectors to temperature sensors, alarms, and the Environmental Control Unit (ECU)

The RBS 884 Micro (1900 MHz) is designed with service breakers to allow for replacement of the heaters and batteries while the base station remains powered. The breakers also provide over-current protection. One main breaker removes power from the entire cabinet.

2.3 Equipped Microbase Subrack (EMBS) – Main Cabinet

The EMBS – Main Cabinet contains the RBS 884 Micro (1900 MHz) equipment units described in this section. Figure 3-5 on page 3-8 shows the main cabinet equipment units in their allocated positions. Variable-speed fans are located in the top of the cabinet and the resulting air flow is dimensioned to handle a fully-equipped cabinet. The equipment units and fans are environmentally sealed to protect circuit board traces and components from direct exposure to outside cooling air.

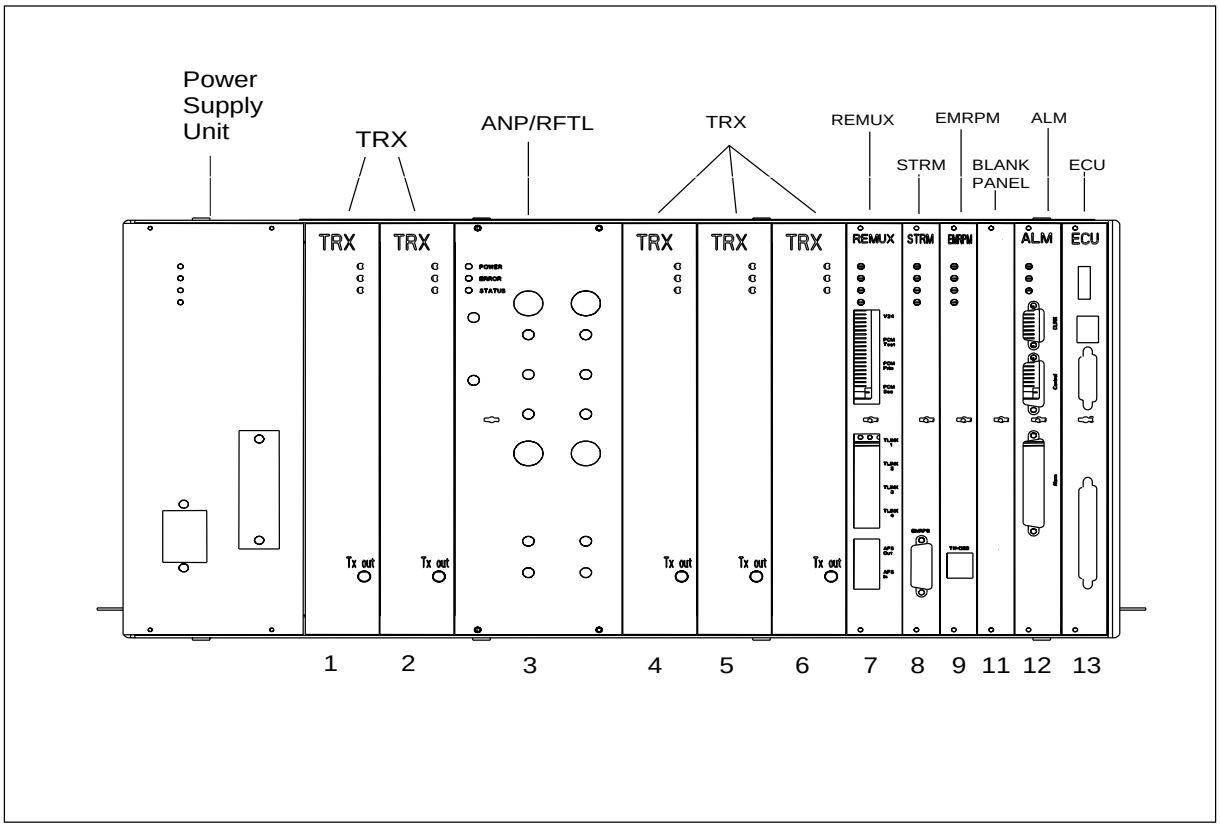

Figure 3-5. RBS 884 Micro (1900 MHz) EMBS Front Panel — Main Cabinet

The equipment units installed in the cabinet are allocated numbered slots, (slot No.1 to slot No. 13) from left to right, and are dimensioned using Building Modules (for example, BM = 1/10 in = 2.54 mm) as the unit of measurement.

The RBS 884 Micro (1900 MHz) EMBS – Main Cabinet contains the following:

- Five Transceivers (TRX), including one Digital Verification Module (DVER) for digital traffic. See Section 2.7 on page 3-15. The five TRXs are installed as follows:
  - Slot 1 (8 BM) – Dedicated Control Channel (DCCH)/Digital Voice Channel (DVC)
  - Slot 2 (8 BM) – DCCH/DVC
  - Slot 4 (8 BM) – DCCH/DVC
  - Slot 5 (8 BM) – DCCH/DVC
  - Slot 6 (8 BM) – DVER
- One Antenna Near Part (ANP) with integrated filter unit and Radio Frequency Test Loop (RFTL). The ANP is installed in slot 3 (10 BM) The function of the ANP is as follows:
  - Supervision of the reflected loss of the TX antenna
  - Calibration of Receiver Signal Strength Indicator (RSSI)
  - Calibration of dynamic power and measurement of output power
  - Operation of test loop. The measured RF signal from the TX antenna output is converted to the corresponding RX frequency and is fed into the receiver at a fixed RF level.
- One Remote Multiplexer (REMUX) - provides T1/E1 PCM line termination and clock stabilization in the main cabinet. The REMUX is not included in primary cabinets. The REMUX is installed in slot 7 (12 BM).
- One Signaling Terminal Regional (STRM) - decodes control information and controls the EMRPM control bus. The STRM is not included in primary cabinets. The STRM is installed in slot 8 (8 BM).
- One Extension Module Regional Processor, Micro (EMRPM) - provides device control, speech interface to transceivers, alarm monitoring and a port for computer interface to the Mobile Switching Center (MSC). The EMRPM is installed in slot 9 (8 BM). Expansion space for a second EMRPM is available in slot 10.
- One EMRPM Dummy Unit - allows for future expansion for a second EMRPM. This equipment unit is the same size as the EMRPM and is used to ensure proper airflow through the unused subrack slot. The EMRPM Dummy Unit is installed in slot 10 (8 BM).

- One Alarm unit (ALM) – provides maximum connection of 32 external alarms. External alarms are alarms for both internal and external equipment that are defined as external alarms on the ALM board. There are no user defined alarms. The ALM is installed in slot 11 (10 BM).
- One Environment Control Unit (ECU) – controls temperature regulation inside the cabinet and provides alarms to the TRXs and the ALM board. The ECU is installed in slot 12 (10 BM).

Note: Unused TRX slots must be equipped with dummy TRXs or Radio Matching Units (RMUs). Other unused slots must have an equipment unit (a blank panel along with a dummy board) to assure proper airflow and electromagnetic shielding.

See Table 3-1 on page 3-10 for the complete EMBS main cabinet configuration.

Table 3-1. EMBS Configuration for RBS 884 Micro (1900 MHz) Main Cabinet

Slot	Name	Explanation	Comments
1-2	TRX	Transceiver	The TRXs act as digital voice/control channels. Slot 1 is recommended for the control channel TRX.
3	ANP/RFTL	Antenna Near Part/ Radio Frequency Test Loop	The ANP provides transmit (TX) and receive (RX) filtering, low-noise amplifying and RFTL functionality.
4-5	TRX	Transceiver	The TRXs act as digital voice/control channels. TRX slots that are not in use, must be equipped with a dummy TRX or RMU.
6	TRX	Transceiver with digital verification functionality	The TRX in slot 6 is used as a Personal Communications Services (PCS) or DVER for uplink measurements.
7	REMUX	Remote Multiplexer	The REMUX provides T1/E1 PCM line termination and clock stabilization in the main cabinet.
8	STRM	Signaling Terminal Regional Micro	The STRM decodes control information and controls the EMRPM.
9	EMRPM	Extension Module Regional Processor Micro	The EMRPM controls the TRXs as well as the REMUX, the ANP/RFTL, and the ALM.
10	Blank Module	Dummy EMRPM	The Blank Module or equipment unit allows for future expansion for a second EMRPM. This equipment unit is the same size as the EMRPM and is used to ensure proper airflow through the unused subrack slot.

Table 3-1. EMBS Configuration for RBS 884 Micro (1900 MHz) Main Cabinet (Continued)

Slot	Name	Explanation	Comments
11	ALM	Alarm	The ALM collects internal and external equipment alarms.
12	ECU	Environmental Control Unit	The ECU controls temperature regulation inside the cabinet. The ECU also provides alarms to the TRXs and the ALM board for fan and heater failures.

2.4 Equipped Microbase Subrack (EMBS) – Primary Cabinet

The EMBS – Primary Cabinet contains the RBS equipment units described in this section. Figure 3-6 on page 3-11 shows the primary cabinet units in their allocated positions. Variable-speed fans are located in the top of the cabinet and the resulting air flow is dimensioned to handle a fully-equipped cabinet.

The RBS equipment units and fans are environmentally sealed to protect circuit board traces and components from direct exposure to outside cooling air.

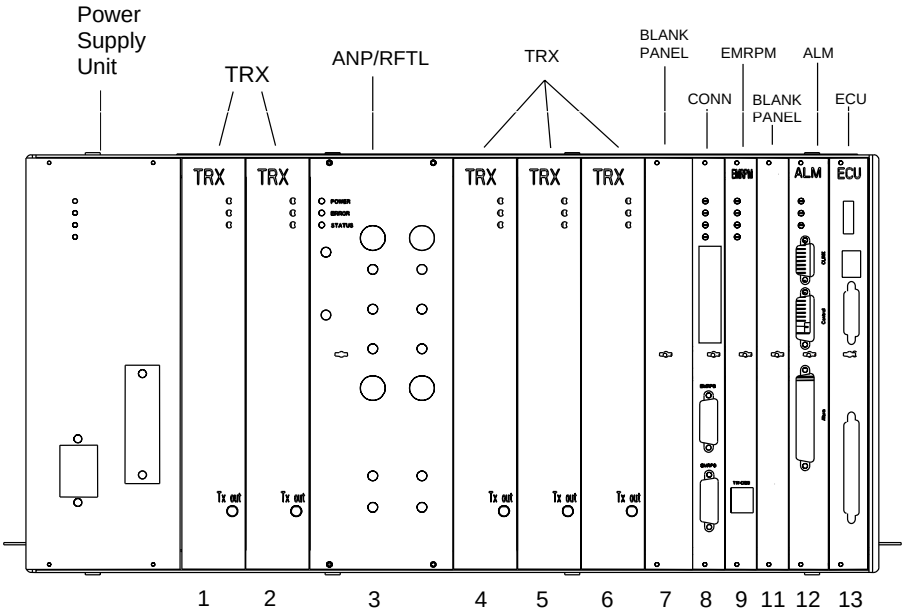

Figure 3-6. RBS 884 Micro (1900 MHz) EMBS Front Panel — Primary Cabinet

The RBS 884 Micro (1900 MHz) EMBS – Primary Cabinet contains the following:

- Five Transceivers (TRX), including one Digital Verification Module (DVER) for digital traffic. See Section 2.7 on page 3-15. The five TRXs are installed as follows:
  - Slot 1 (8 BM) – DCCH/DVC
  - Slot 2 (8 BM) – DCCH/DVC
  - Slot 4 (8 BM) – DCCH/DVC
  - Slot 5 (8 BM) – DCCH/DVC
  - Slot 6 (8 BM) – DVER
- One ANP/RFTL with integrated filter unit. The ANP/RFTL is installed in slot 3 (10 BM).
- One Blank equipment unit or Dummy REMUX. The Dummy REMUX is installed in slot 7 (8 BM).
- One Connector (CONN) Unit - relays signals from the REMUX and STRM units in the main cabinet to the other units in the primary cabinet. The CONN is installed in slot 8 (8 BM).
- One Extension Module Regional Processor, Micro (EMRPM) - controls the TRX slots 1, 2, 4, 5, and 6. The EMRPM is installed in slot 9 (8 BM)
- One EMRPM Dummy Unit- allows for future expansion for a second EMRPM. This equipment unit is the same size as the EMRPM and is used to ensure proper airflow through the unused subrack slot. The EMRPM Dummy Unit is installed in slot No.10 (8 BM).
- One Alarm Unit (ALM) — provides maximum connection of 32 external alarms. External alarms are alarms for both internal and external equipment that are defined as external alarms on the ALM board. There are no user defined alarms. The ALM is installed in slot 11 (10 BM).
- 1 Environment Control Unit (ECU). The ECU is installed in slot 12 (10 BM).

Note: Unused TRX slots must be equipped with dummy TRXs or Radio Matching Units (RMU). Other unused slots must have an equipment unit (a blank panel along with a dummy board) to assure proper airflow and electromagnetic shielding.

See Table 3-2 on page 3-13 for the complete EMBS primary cabinet configuration.

Table 3-2. EMBS Configuration for RBS 884 Micro (1900 MHz) Primary Cabinet

Slot	Name	Explanation	Comments
1-2	TRX	Transmit TRX	The TRXs act as digital voice/control channels. Slot 1 is recommended for the control channel TRX.
3	ANP/RFTL	Antenna Near Part/Radio Frequency Test Loop	The ANP provides transmit (TX) and receive (RX) filtering, low-noise amplifier and RFTL functionality.
4-5	TRX	Transceiver	The TRXs act as digital voice/control channels. TRX slots which are not in use, must be equipped with a dummy TRX or RMU.
6	TRX	Transceiver with digital verification functionality	The TRX in slot 6 is used as a Personal Communication Services (PCS) or DVER for uplink measurements.
7	Blank module	Dummy TRX	The dummy TRX or RMU is used to ensure proper airflow through the unused subrack slot.
8	CONN	Connection Board	The CONN board passes TRX signals to the backplane.
9	EMRPM	Extension Module Regional Processor Micro	The EMRPM controls the TRXs as well as the REMUX, the ANP/RFTL, and the ALM units.
10	Blank Module	Dummy EMRPM	The Blank Module or equipment unit allows for future expansion for a second EMRPM. This equipment unit is the same size as the EMRPM and is used to ensure proper airflow through the unused subrack slot.
11	ALM	Alarm	The ALM collects internal and external equipment alarms.
12	ECU	Environmental Control Unit	The ECU controls temperature regulation inside the cabinet. The ECU also provides alarms to the TRXs and the ALM board for fan and heater failures.

2.5 Remote Multiplexer (REMUX)

The RBS 884 Micro (1900 MHz) contains a T1/E1 transmission unit (REMUX) for a 24 channel or 32 channel PCM link with the MSC. The incoming PCM is connected to the PCM Primary (Prim) connector on the REMUX.

One REMUX unit is installed in slot No. 8 in the main cabinet.

For distances of greater than 200 meters, a customer-supplied Channel Service Unit (CSU) can be mounted on the shelf above the main cabinet heater.

Table 3-3 on page 3-14 shows the available REMUX types for T1 and E1 systems.

Table 3-3. PCM System - REMUX

PCM System	Type	Distance to Nearest Active Device (For Instance, CSU or Repeater)	REMUX
T1	Short Haul without external Channel Service Unit CSU	<200 m	REMUX 24
T1	Long Haul with external CSU	<1800 m	REMUX 24
E1	Short Haul	<200 m	REMUX 32SH

The REMUX switches are preset at the factory according to the predetermined transmission requirements of the RBS 884 Micro (1900 MHz) site supplied by the site engineer.

The site engineer insures that the installer has access to documented transmission specifications for the RBS 884 Micro (1900 MHz) site. It is vital that the site engineer records all PCM line and switching information in the site installation documentation.

2.6 Extension Module Regional Processor, Micro (EMRPM)

Each RBS 884 Micro (1900 MHz) cabinet contains one EMRPM unit which controls TRX traffic. An extra slot is provided for possible future expansion for a second EMRPM unit to share the traffic load. Ten devices can be connected to each EMRPM unit with TLINK connections. These are numbered TLINK 1 to TLINK 10.

The load capacity of the EMRPM allows up to four of the DVC TLINK connections for TRXs. The EMRPM is assigned to control the REMUX and the RFTL.

The incoming time slots are connected in a fixed pattern, as shown in Table 3-4 on page 3-14.

Table 3-4. RBS 884 Micro (1900 MHz) EMRPM 1

EMRPM TLINK	Cabinet slot	Function
1	1	TRX
2	2	TRX
3	4	TRX
4	5	TRX
6	6	DVER
7	11	ALM
9	3	ANP
10	7	REMUX

The addresses of the EMRPM are set using a DIP switch on the unit. No address plug is required. The address is dependent upon the configuration of the RBS site and number of cabinets used.

The site installation documentation shows how the switches are to be set for a specific site.

A computer can be connected to the TW/DEB port at the front of the EMRPM unit. The interface has the same function as the V24–B3 unit.

2.7 Transceiver (TRX)

The transceiver (TRX) transmits and receives radio signals to and from mobile stations.

A TRX unit can be remotely configured to support any of the following channel functions:

- Digital Voice Channel (DVC) – transmits and receives
- Digital Control Channel DCCH) – transmits and receives
- Digital Verification (DVER) Channel – receives only

The selection of transceiver channel function is under software control at the Mobile Switching Center (MSC). The first time slot may be used for DCCH and the remaining two time slots for DVCs, or all three time slots may be used for DVCs.

The TRX provides 33.3 dBm (2.1 W) per carrier at the ANP for the two-antenna configuration and 36.8 dBm (4.8 W) per carrier at the ANP for the four-antenna configuration. The dynamic range is 20 dB with 0.2–dB resolution.

The TRX includes all functionality needed for one RF channel, such as:

- Channel coding and decoding
- Modulation and demodulation
- Power amplification
- Power regulation
- Synchronization
- Diversity combining
- Measurements on received radio signal
- Verification processing (when configured as DVER)

The maximum output power for each TRX is 13.5 W. Note that digital speech coding takes place in the voice coder units in the MSC and not in the TRXs. There are four TRXs (carriers) for each antenna system, which provides 11 digital voice paths per sector.

Table 3-5 on page 3-16 shows the allocation slots for TRX units in cabinets that are not fully equipped. In the following table, the TRX positions shown in bold (**X**) represent factory installed units. All empty slots must contain an RMU.

Note: The term transceiver or TRX is used in this document to refer to the hardware unit itself and does not reflect the functionality of the unit. Subrack position 6 must be equipped with a TRX that functions as a receiver or Digital Verification Module (DVER).

Table 3-5. RBS 884 Micro (1900 MHz) TRX Unit Installation – Cabinet Not Fully Equipped

No. of TRX	**TRX slot position in cabinet**				
	1	**2**	**4**	**5**	**6 (DVER)**
3	**X**	**X**			**X**
			X	X	**X**
4	**X**	**X**	**X**		**X**
	X	X		X	**X**
		X	X	X	**X**
5	**X**	**X**	**X**	**X**	**X**

The maximum speech traffic capacity for a three cabinet configuration is 33 digital voice channels for both the American standard (T1 environment) and the International standard (E1 environment).

In cascaded configurations one PCM time slot for speech is lost for each additional signaling link.

2.8 Antenna Near Part (ANP)/Radio Frequency Test Loop (RFTL)

The combined Antenna Near Part (ANP), Radio Frequency Test Loop (RFTL), and integrated filter unit provides combining and splitting of RF signals to each antenna.

The main functions of the ANP/RFTL are as follows:

- Combine the output signal of the TRXs
- Filter TX and RX signals
- Protect the TRXs from high reflected power
- Pre-amplify and distribute RX signals
- Provide isolation between the TRXs

- Calibrate TRX transmitter and receivers
- Antenna supervision

The ANP, RFTL, and integrated filters are combined in a single ANP/RFTL assembly and reside in the subrack. The backplane of the subrack contains a five–way power splitter for each receiver diversity branch. The ANP/RFTL assembly provides a single signal for each diversity branch with all splitting performed in the backplane. This design allows all five TRXs to receive the same signal at the same level.

2.9 Environmental Control Unit

The Environmental Control Unit (ECU) runs a control loop that monitors the internal cabinet temperature at several different locations. Using these readings, the ECU maintains the cabinet at an acceptable temperature by controlling the speed of the fans and the power to the heater. When the ECU is unable to maintain the cabinet at an acceptable temperature, the ECU provides alarms to the switch through the EMRPM and ALM boards and can ultimately remove power from the subrack and shut down the base station.

2.10 Fans

The RBS 884 Micro (1900 MHz) uses four variable speed-controlled fans to regulate the temperature of the circuit cards and modules in the cabinet. The fan control is driven by an open thermal control loop that references the outside ambient air temperature. The temperature sensor for the fan control is located in an area that is not affected by solar exposure nor by power dissipation from the cabinet. The amount of air flow through the cabinet is limited to that required to maintain the components within their temperature specifications.

The fans are controlled by the ECU. The ECU is capable of varying the speed of the fans and can turn off one or more of the fans during low temperature extremes and during cold temperature start-up. To insure fail-safe operation, the fans operate at full speed when the thermal sensor signal is lost.

The fans are modular units and can be easily accessed from the top door of the RBS 884 Micro (1900 MHz) cabinet. Fan replacement is done with the fan breaker in the ON position. Base station personnel cycle the fan breaker off and on to reset the fan alarm after they complete the fan replacement procedure. Refer to the *RBS 884 Micro (1900 MHz) Installation and Hardware Replacement Manual* for further information on the fan replacement procedure.

2.11 Air Filter

The RBS 884 Micro (1900 MHz) cabinet is equipped with a cooling air intake filter. The lower front panel of the cabinet is removable to gain access for periodic filter replacement.

3 Installation Configurations

3.1 Limitations

One RBS cabinet can contain up to five transceivers, four of which can be used for handling speech traffic.

3.2 Standard Configurations RBS 884 Micro(1900 MHz)

The RBS 884 Micro (1900 MHz) cabinets are pre-configured and assembled at the factory before delivery to the RBS site. It is the responsibility of the site engineer to dimension the required configuration.

When considering which configuration to choose, the dimensioning of the transceiver (TRX) units must be done. The RBS 884 Micro (1900 MHz) can contain as few as three TRX units per cabinet. Additional capacity can be added later.

The RBS 884 Micro (1900 MHz) product contains a number of cabinet configurations depending on the following:

- AC power voltage: 110 V 60 Hz or 230 V 50 Hz
- Type of transmission: E1 or T1
- Antenna configuration: 2 or 4 antennas
  - Two antenna mounting: cabinet-mounted or external
  - Four antenna mounting: external
- Frequency band: AD, DBE, or EFC
- Number of TRXs: 3, 4, or 5 (including 1 Digital Verification (DVER) unit)

The number of cabinets required at the RBS site can be one, two, or three, depending on the number of TRX units and sectors determined for that specific RBS site. The 1900 MHz base station cabinet can be configured to perform as a main or as a primary cabinet by installing the appropriate equipment units.

The configuration diagrams in this section show cabinets (main, and primary), PCM input, AC power input, antenna configurations, and interconnections between cabinets. The cabinets are shown with maximum

equipment installed. The PCM/TLINK/EMRPM, control, and synchronization interconnections between cabinets are shown as **DATA**.

Each cabinet requires a separate electrical AC power input supply.

Table 3-6 on page 3-19 provides a list of the antenna and PCM cable connection points that appear on the underside of the Mounting Base Connector Plate.

Table 3-6. Mounting Base Connector Plate – External Cables

External Cable Connector	Connector Plate Connection
Antenna TX/RX (1st)	ANT - 1
Antenna TX/RX (2nd)	ANT- 2
Antenna TX (1st)	ANT- 3
Antenna TX (2nd)	ANT- 4
PCM	PCM - P

The PCM transmission connection from the RBS to the MSC connects through the PCM lightening protection box that is located below the subrack in the main cabinet.

Refer to the *RF Guidelines* for information on reverse isolation and the output power levels for each configuration.

3.2.1 One-Sector Site

The following cabinet configurations are available for the RBS 884 Micro (1900 MHz) one-sector site.

3.2.1.1 Single Cabinet - 2 Duplex Filters, 2 TX/RX Antennas

Figure 3-7 on page 3-20 and Figure 3-8 on page 3-20 show one-sector site configurations. Both of these configurations have a two-antenna ANP with hybrid combiners and duplex filters connected to an antenna array of two TX/RX antennas.

The ANP for both the cabinet-mounted antenna and the external antenna is offered in the following frequency bands:

- AD
- DBE
- EFC

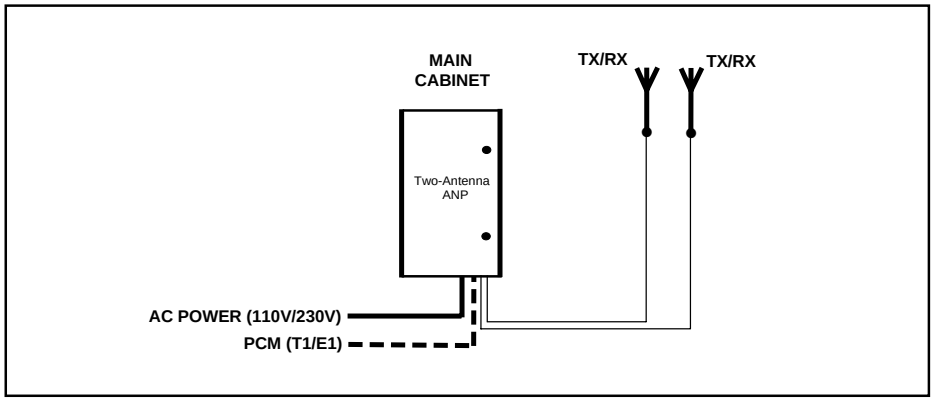

Figure 3-7. Cabinet Connections, RBS 884 Micro (1900 MHz) One-Sector Site – One Cabinet – Two TX/RX Antennas

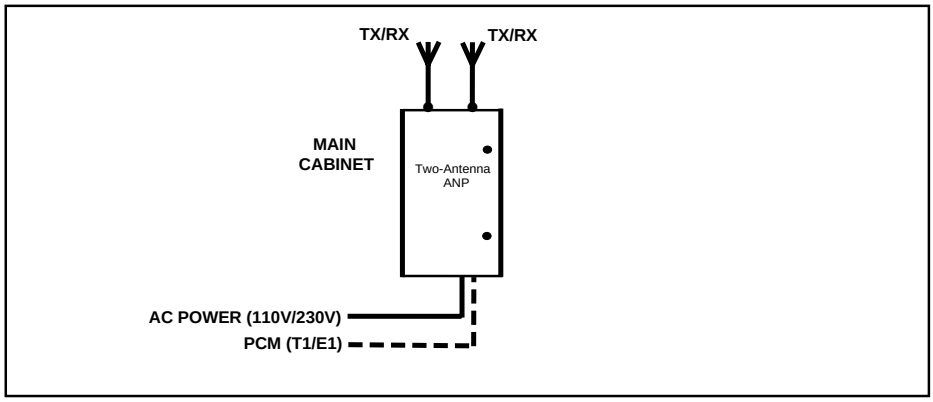

Figure 3-8. Cabinet Connections, RBS 884 Micro (1900 MHz) One-Sector Site – One Cabinet – Two Fixed Antennas

The Cabinet-Mounted Antenna Kit can be used to mount two fixed antennas directly on the cabinet for a totally self-contained base station.

Note: Single sector site expansion is possible with the use of shared antennas and cell overlays, although RF performance may be compromised.

3.2.1.2 Single Cabinet — 4 Antennas (2 TX/RX Antennas and 2 TX-Only Antennas)

Figure 3-9 on page 3-21 shows a one-sector site configuration with a four-antenna ANP connected to an antenna array of two TX-only antennas and two TX/RX antennas with duplex filters.

The four-antenna ANP is offered in the following frequency bands:

- AD
- DBE
- EFC

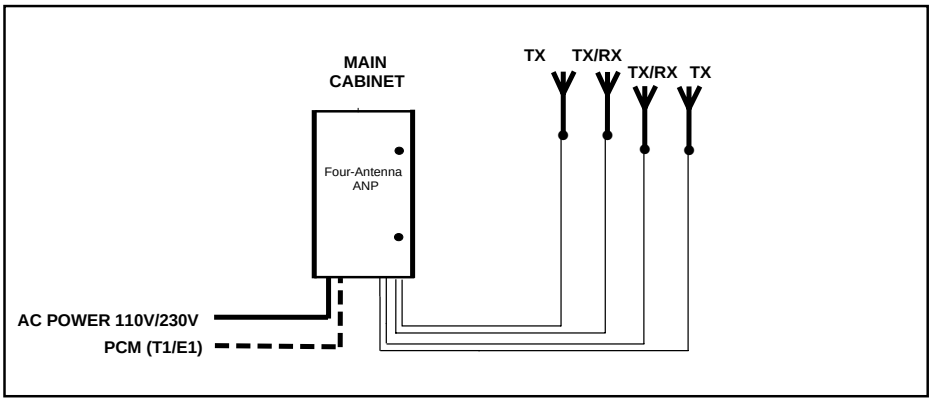

Figure 3-9. Cabinet Connections, RBS 884 Micro (1900 MHz) One-Sector Site – 1 Cabinet – 4 Antennas

Note: Single sector site expansion is possible with the use of shared antennas and cell overlays although RF performance may be compromised.

3.2.2 Two-Sector Site

The following cabinet configurations are available for the RBS 884 Micro (1900 MHz) two-sector site.

3.2.2.1 Dual Cabinets — 2 TX/RX Antennas

Figure 3-10 on page 3-22 and Figure 3-11 on page 3-22 show two-sector site configurations with a main and a primary cabinet. Each cabinet has a two-antenna ANP with hybrid combiner filters and duplex filters connected to an antenna array of two TX/RX antennas.

The two-antenna ANP for both the cabinet-mounted antenna and the external antenna is offered in the following frequency bands:

- AD
- DBE
- EFC

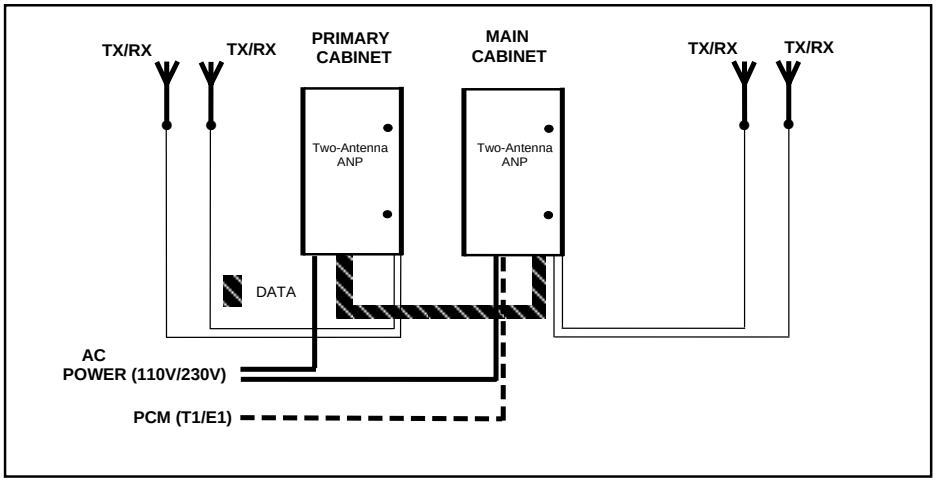

Figure 3-10. Two-Sector Site - 2 Cabinets - 2 TX/RX Antennas

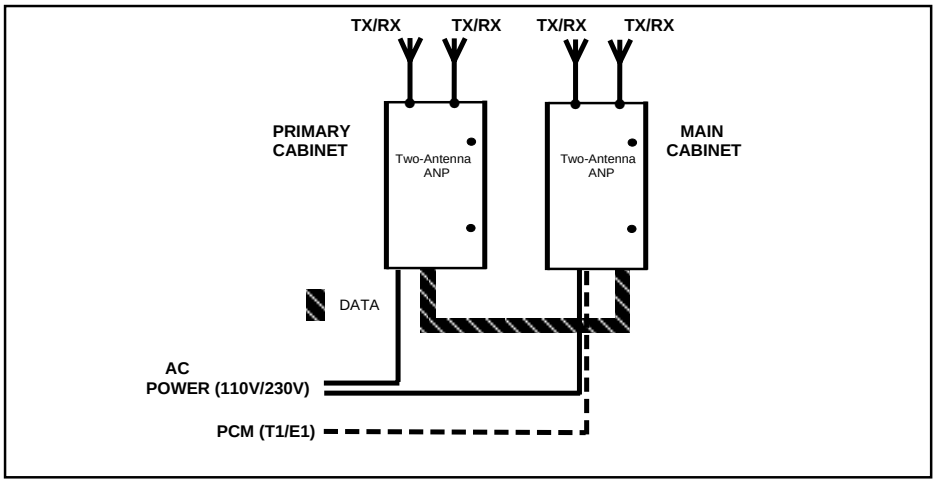

Figure 3-11. Cabinet Connections, RBS 884 Micro (1900 MHz) Two-Sector Site – 2 Cabinets – 2 Fixed Antennas

The Cabinet-Mounted Antenna Kit can be used to mount two fixed antennas on each cabinet for a totally self-contained base station site.

3.2.2.2 Dual Cabinets — 4 Antennas (2 TX/RX Antennas and 2 TX-Only Antennas)

Figure 3-12 on page 3-23 shows a two-sector site configuration with a main and a primary cabinet. Each cabinet has a four-antenna ANP connected to an antenna array of two TX-only antennas and two TX/RX antennas with duplex filters.

The four-antenna ANP is offered in the following frequency bands:

- AD
- DBE
- EFC

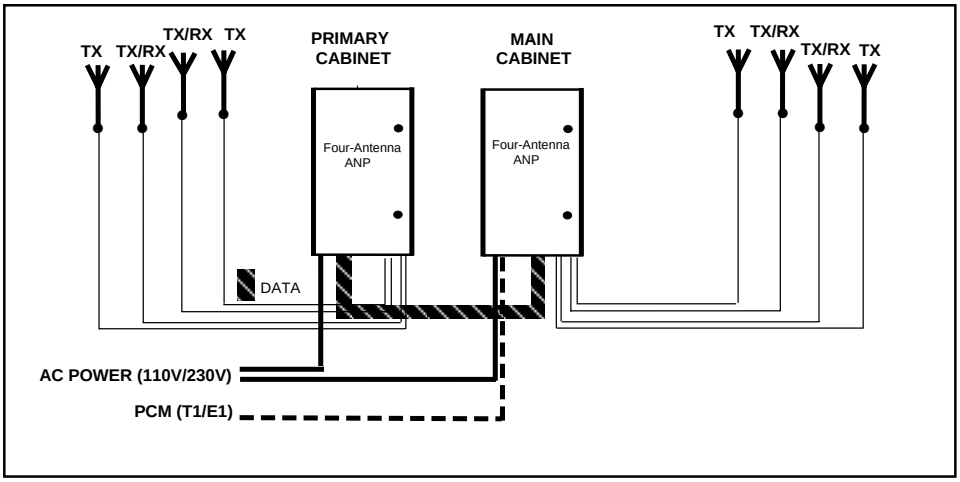

Figure 3-12. Two-Sector Site - 2 Cabinets - 4 Antennas

3.2.3 Three-Sector Site

The following cabinet configurations are available for the RBS 884 Micro (1900 MHz) in a three-sector site.

3.2.3.1 Triple Cabinets — 2 TX/RX Antennas

Figure 3-13 on page 3-24 and Figure 3-14 on page 3-24 show three-sector site configurations with a main and two primary cabinets. Each cabinet has a two-antenna ANP with hybrid combiner filters and duplex filters connected to an antenna array of two TX/RX antennas. The primary cabinets are used to provide additional sectors.

The two-antenna ANP for both the cabinet-mounted antenna and the external antenna is offered in the following frequency bands:

- AD
- DBE
- EFC

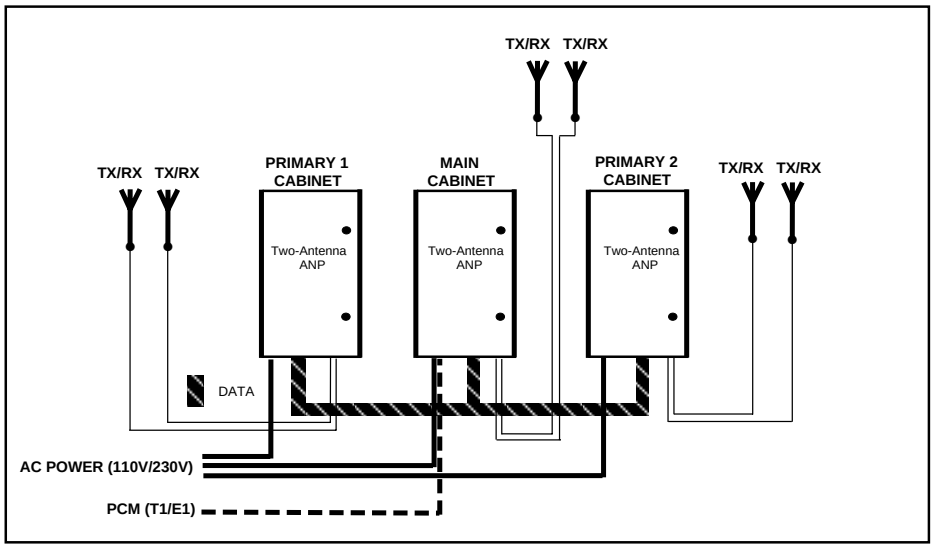

Figure 3-13. Cabinet Connections, RBS 884 Micro (1900 MHz) Three-Sector Site - 3 Cabinets - 2 TX/RX Antennas

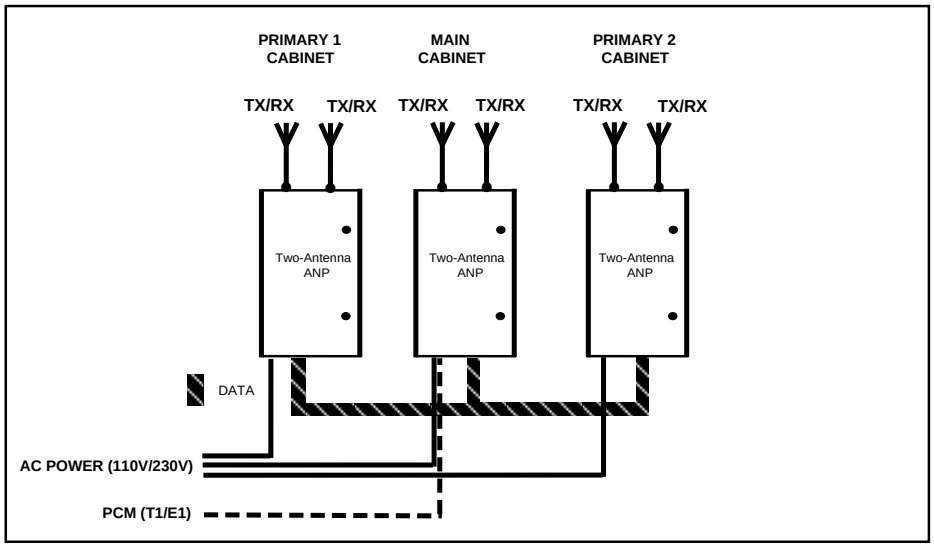

Figure 3-14. Cabinet Connections, RBS 884 Micro (1900 MHz) Three-Sector Site – 2 Cabinets – 2 Fixed Antennas

The Cabinet-Mounted Antenna Kit can be used to mount two fixed antennas to each cabinet for a totally self-contained base station site.

3.2.3.2 Triple Cabinets — 4 Antennas (2 TX/RX Antennas, 2 TX-Only Antennas)

Figure 3-15 on page 3-25 shows a three-sector site configuration with one main and two primary cabinets. Each cabinet has a four-antenna ANP connected to an antenna array of two TX-only antennas and two TX/RX antennas with duplex filters.

The four-antenna ANP is offered in the following frequency bands:

- AD
- DBE
- EFC

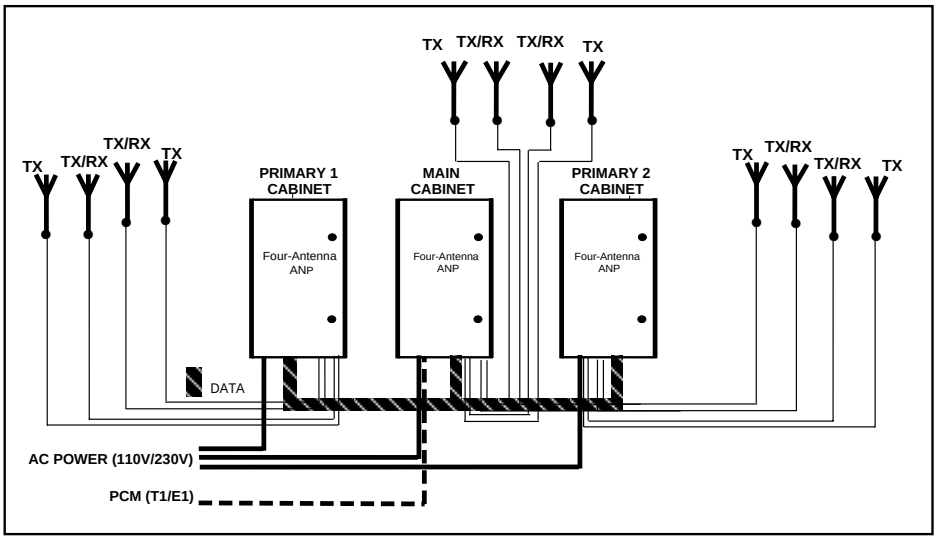

Figure 3-15. Cabinet Connections, RBS 884 Micro (1900 MHz) Three-Sector Site - 3 Cabinets - 4 Antennas

3.2.3.3 Cascade Configurations — RBS 884 Micro (1900 MHz)

RBS 884 Micro (1900 MHz) systems can be connected in a cascading arrangement (see Figure 3-16 on page 3-26) with a single T1/E1 line in order to reduce transmission costs. Cascading is used to expand a site and to create different Radio Cabinet Groups (RCGs) at the same site.

Drop and insert considerations become important when planning the cascading of an RBS site.

Each 1900 MHz micro base will become a separate Extension Module Group (EMG) and have its own control channel (DS0 - 64 kbit/s channel) on the PCM (T1/E1) transmission cable interconnections.

Additional Control Signaling Link (CLC) extraction time slots will be required for each additional REMUX introduced to support cascading. This allocation is determined by the operator or network provider. Each REMUX will require all switch settings to be checked and reset as necessary (see the *Processes and Procedures* part of this manual).

To maintain transmission quality, it is recommended that no more than four RBS 884 Micro (1900 MHz) base stations be cascaded.

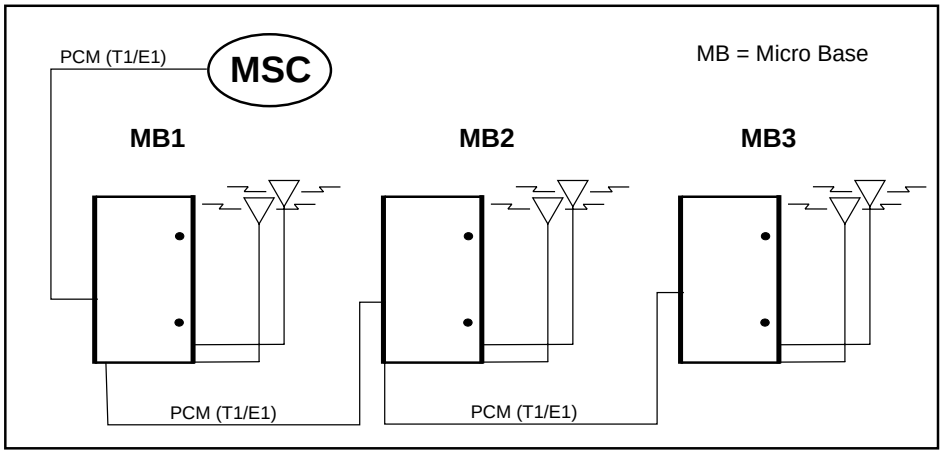

Figure 3-16. RBS 884 Micro (1900 MHz) Cascade Configuration

Part 4

Installation

1 Introduction 4-3

2 Safety Considerations 4-3
2.1 Cabinet Grounding 4-3
2.2 Voltage Hazards 4-3
2.3 Radio Frequency Radiation 4-4
2.4 Beryllium Oxide 4-4
2.5 Heavy Loads 4-5

3 Electrostatic Discharge (ESD) 4-5
3.1 Storage and Transport 4-6
3.2 ESD Wrist Strap 4-6

4 Tools 4-6

5 Site Selection 4-7
5.1 Right-of-Way 4-7
5.2 Public Safety 4-7
5.3 Vulnerability 4-8
5.4 Accessibility 4-8

6 Transportation and Storage 4-8

7 Unpacking 4-9
7.1 Required Tools 4-9
7.2 Unpacking Procedure 4-10

8 Cabinet Installation 4-12
8.1 Required Materials and Tools 4-12
8.2 Installation on a Pad 4-12
8.3 Installation on a Pole 4-15
8.4 Installation on a Wall 4-18
8.5 Installation on a Roof 4-21

9 Cable and Power Connections 4-22
9.1 Grounding 4-22
9.2 Installing Batteries 4-23
9.3 Installing AC Power 4-26
9.4 Cable Installation 4-28

10 Setting the Unit Switches 4-34
10.1 Prerequisites and Tools 4-35
10.2 REMUX Switch Settings 4-36
10.3 EMRPM Switch Settings 4-44

11 External Cable Installation 4-45
11.1 Required Materials and Tools 4-46
11.2 Antenna Connections 4-47

11.3 ANP/RFTL Connections 4-47

12 Site Inventory 4-53
12.1 Prerequisites 4-53
12.2 Site Inventory Procedure 4-53

13 Equipment Power Up 4-54
13.1 Prerequisites and Test Equipment 4-55
13.2 Power-Up Procedure 4-55

14 Cold Start-up 4-57

15 Completing the Installation 4-58
15.1 Prerequisites and Tools 4-58
15.2 Installation Completion Procedure 4-58

16 LED Indications 4-59
16.1 PSU LEDs 4-60
16.2 TRX LEDs 4-60
16.3 REMUX LEDs 4-61
16.4 ANP (RFTL) LEDs 4-61
16.5 STRM LEDs 4-62
16.6 ALM LEDs 4-62
16.7 EMRPM LEDs 4-63
16.8 ECU LEDs 4-63

17 Site Expansion 4-64
17.1 Adding TRX Boards 4-65
17.2 Adding Cabinets 4-69
17.3 One-Sector Sites 4-72
17.4 Two-Sector Sites 4-74
17.5 Three Sector Sites 4-77

18 RBS 884 Micro (1900 MHz) Cabinet Repainting . 4-83
18.1 Required Materials and Tools 4-83
18.2 Cabinet Surface Preparation 4-83
18.3 Cabinet Painting 4-84

1 Introduction

This part of the manual contains procedures for unpacking and installing the RBS 884 Micro (1900 MHz) equipment. Additional procedures are provided for switch configuration, cable installation, power up, and site expansion.

The RBS 884 Micro (1900 MHz) cabinet can be installed on a wall, a pole, or pedestal. The cabinet can also be repainted (refer to Section 18.3 on page 4-84).

2 Safety Considerations

2.1 Cabinet Grounding

This product is Safety class 1 equipment.

The RBS 884 Micro (1900 MHz) cabinet wiring is based on a single-point ground system. The cabinet has an external earth-ground stud connection on the bottom surface of the cabinet shell.

DANGER!

Any interruption of the protective (grounding) conductor or disconnection of the protective ground terminal will cause a potential shock hazard that could result in personal injury.

2.2 Voltage Hazards

DANGER!

Voltage over 100V is used in the AC equipment at the site. Observe safety precautions. Contact with power can cause death. Do not be misled by the term “low voltage.” Potentials as low as 50V can result in death.

Do not touch high voltage connections when working on energized equipment.

DANGER!

Do not energize equipment before the Power Up procedure in this manual is performed.

Perform the procedures in the order presented.

DANGER!

Never connect the power cable to the power unit when the unit is removed from the cabinet.

2.3 Radio Frequency Radiation

DANGER!

Radio frequency radiation from an antenna may be a danger to health, causing severe burns to skin and clothing.

Tell the MSC turn off the transmitters prior to working with or near antennas.

2.4 Beryllium Oxide

Some equipment contains beryllium oxide in ceramic form.

Warning!

Beryllium oxide is poisonous and constitutes a health hazard if present in finely dispersed form, such as dust or smoke, which can be inhaled. Read local hazardous chemical regulations before working with beryllium oxide.

Units with components containing beryllium oxide are marked with a warning label. For detailed information on properties, health and environmental hazards, refer to the regulations issued by the local authorities.

The following rules must be obeyed by all persons handling beryllium oxide:

- Ceramics containing beryllium oxide must not be scraped, filed, ground, treated with acid or machined in any other way.
- Compressed air must **not** be used to clean units containing beryllium oxide.
- You must always wear protective gloves when handling beryllium oxide.
- Use wet rags to collect dust and particles from damaged beryllium oxide components. After use, place the rags in plastic bags and seal the bags completely.

Scrapped beryllium oxide must be treated as environmentally hazardous waste. Local authorities enforce regulations, regarding the treatment and disposal of environmentally hazardous waste. Investigate the local regulations which are applicable to you and comply with them.

2.5 Heavy Loads

Warning!

A heavy load lifted incorrectly can cause injury to persons and damage to the equipment can result.

A heavy load is considered to be 10 kg (approximately 22 lbs).

Note: The RBS 884 Micro (1900 MHz), fully equipped, weighs 105 kg (230 lbs). Ericsson recommends two persons be present during the maintenance.

3 Electrostatic Discharge (ESD)

The human body acquires static charge in all situations involving movement. The body rubs against clothes and against a chair when sitting down, and shoes rub against the floor. The same effect is achieved when handling ordinary plastic materials.

If the body comes into contact with a grounded integrated circuit (IC) component, this static charge may cause an electrostatic discharge (ESD) to take place resulting in damage to the component.

To avoid component damage from ESD, always follow the instructions for handling sensitive electronic components and circuit boards.

Always use ESD protection equipment when working with such components and boards.

3.1 Storage and Transport

Store and transport components and circuit boards in their original packaging.

Alternatively, use a conductive material or special IC carrier that either short-circuits all contacts and pins, or insulates them from external contact.

3.2 ESD Wrist Strap

When working with circuit boards and cables, an ESD Wrist Strap must be used to avoid ESD damage. When the strap cable is supplied with a “alligator” connector, it can be connected to an unpainted metal part of the cabinet chassis as shown in Figure 4-1 on page 4-6.

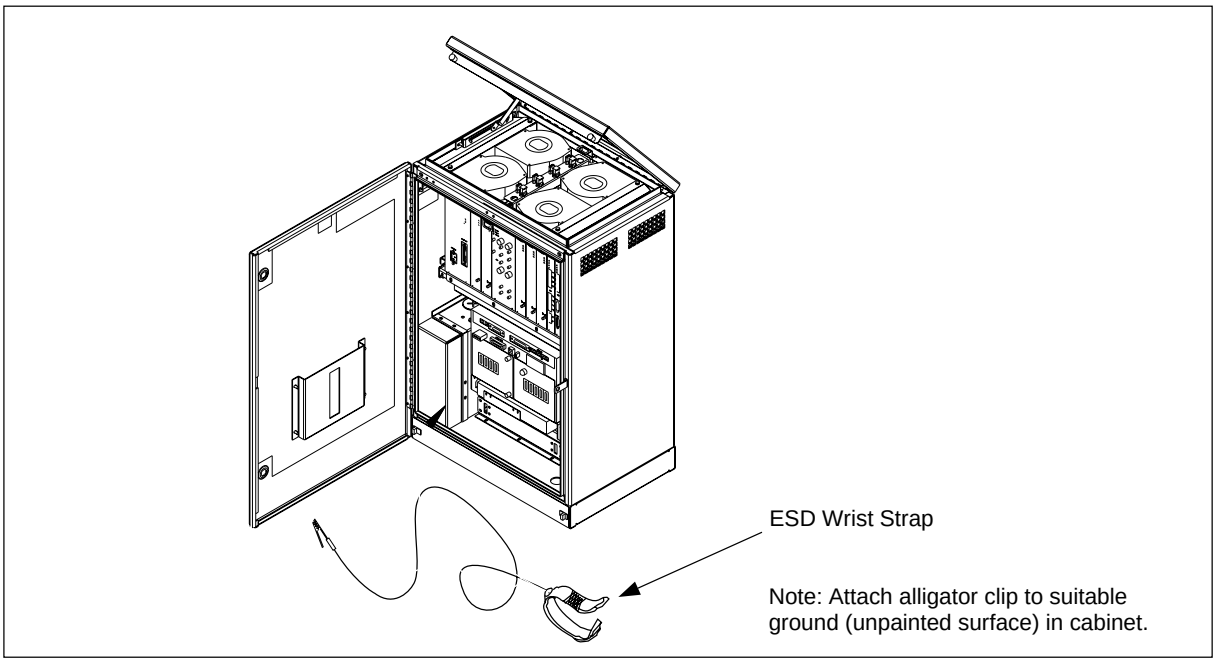

Figure 4-1. ESD Wrist Strap connected to the RBS 884 Micro (1900 MHz) Cabinet

4 Tools

All the tools needed to unpack and install the cabinets, to connect the grounding cables and braids, to set the switches, to install the cables, and to perform power up, are shown in Table 5-1 on page 5-7.

Table 4-1. Tools List

Product Number	Description
	Metric Tape Measure[1]
	Horizontal/Vertical Level[1] (for wall mounting)
	Pen
	Drill[1]
	Drill Bit[1] (10 mm for wall mounting)
LYB 250 01/14	ESD Wrist Strap and Cable[2] (with banana connector)
LTT 601 82	Torque Wrench set including: - Torque Wrench set to torque 0.6 Nm (to use with the SMA tool or the Torx bit TX10 - Torx bit TX10 (for cabinet unit screws) - SMA tool (for the coaxial cables)
LTD 117 02 and LTD 117 14	Unit Extractor Tool (Handle + Button)
	AC Voltmeter[1] (for checking the line voltage)
	Tools for connecting the AC Power Cable to a Line Power Access Point (if this is the local procedure)
[1] Included in Tool Kit LTT 601 044/1 [2] Included in Tool Case LTT 601 84	

5 Site Selection

5.1 Right-of-Way

The installing company should acquire the rights of way from landowners and obtain permits or other approvals from public authorities before starting construction.

The RBS 884 Micro (1900 MHz) cabinet should be placed in servitudes, on dedicated (recorded) easements, or on property owned by the company. Avoid unrecorded easements.

If the location is on a rooftop, the same rights-of-way as stated above apply. Additional considerations and approvals may be required, such as rooftop loading

5.2 Public Safety

Public safety and street rights-of-way should be used only when there is adequate space to place the cabinet and provide safe working conditions.

The cabinet should be placed so that it will not obstruct automobile or pedestrian traffic.

5.3 Vulnerability

Installation locations should be protected against accidents or vandalism. Use protected posts when installing cabinets near automobile traffic and parking areas.

Do not place the cabinets below grade or in flood prone areas. The cabinet should always be located on a site above the 100–year flood plain. The site should not be subject to water run off or flash flooding during heavy rains.

If an area is subject to frost, the site must be free of heaving.

For pole-mounted cabinets, ensure the pole can support the cabinet weight (approximately 105 kg (230 lbs).

5.4 Accessibility

For safety, the cabinet should be easily accessible with adequate parking.

Do not install the cabinet within 42.0 inches (1066.8 mm) of any obstruction, such as a fence, hedge, or tree.

6 Transportation and Storage

Caution!

Follow all appropriate local transportation, handling, and safety practices when transporting and storing the cabinet to a staging or installation site.

The cabinet is shipped in a wooden box on a wooden pallet.

Warning!

To avoid possible damage to the cabinet, do not remove the packaging or pallet from the cabinet until it is at the installation or staging site.

If the cabinet packaging appears damaged, do not accept the unit or component from the shipper. Damaged packaging could indicate cabinet or equipment damage.

Always use proper lifting equipment, such as forklift, to raise the cabinet and pallet.

Always store the cabinet and battery components in the upright position to avoid possible damage.

Caution!

Do not stack units for transportation or during storage.

7 Unpacking

The RBS 884 Micro (1900 MHz) cabinet is shipped in a wooden box on a wood pallet.

7.1 Required Tools

The tools required to unpack the cabinet are shown in Table 4-2 on page 4-9.

Table 4-2. Tools Required to Unpack cabinet

Product Number	Description
N/A	Tamper resistant wrench (supplied with cabinet)
N/A	Socket or adjustable wrench (for pallet bolts)
N/A	Hammer
N/A	Large flat-blade screwdriver
N/A	Small flat pry bar or crow bar

7.2 Unpacking Procedure

7.2.1 Receiving Materials

Warning!

To avoid damaging the cabinet, do not remove the pallet or wooden box from the cabinet until the cabinet is transported to a staging or installation site.

1. After receiving all materials, check packing slip to ensure that all boxes/crates are accounted for.
2. Inspect all boxes and crates for any visible damage.
3. Report any material shortages or damages to your local logistics coordinator.

7.2.2 Unpacking

1. Remove all packaging material from around the cabinet and the pallet.

   Note: Do not remove the pallet until the cabinet is ready to be lifted into the mounting position.

2. Use a tamper-resistant wrench to open the doors. Insert the wrench into a security bolt and turn it 1/4–turn counterclockwise. Repeat for the other bolt. Open the door.

   Note: The 1/4-turn tamper resistant wrench is in a plastic bag taped to the outside of the Main Cabinet.

3. As the door is opened, secure the wind latch at the top of the door. Open the door until the shoulder slides into the slot at the end of the bar. To release the wind latch, lift up on the bar.
4. Inspect moving parts, mounting hardware, connectors, and electronic equipment. If the cabinet or any equipment appears to be damaged, follow the local procedures or contact the logistics coordinator.
5. Check the packing slip and ensure all parts ordered are received.
6. Remove all packaging and dispose of it according to local practices.

7.2.3 Lifting the Cabinet

DANGER!

To avoid injury or equipment damage, follow all local safety practices while lifting the cabinet. Wear all locally recommended safety equipment. Manual cabinet lifting is not recommended. To avoid injury, use proper lifting equipment. Attach any lifting equipment to lifting ears located on rear of cabinet. Ensure there are no obstructions around cabinet.

Warning!

The RBS 884 Micro (1900 MHz) cabinet will tilt forward when raised by the lifting ears located on the rear of the cabinet.

Observe the following procedures when lifting the RBS 884 Micro (1900 MHz) cabinet from the pallet:

- Keep bystanders away from work operations at all times.
- Do not lift the cabinet over people. Do not let anyone work, stand, or pass under a cabinet being lifted.
- All persons working with lifting equipment must wear standard safety headgear and (when required) gloves.
- When lifting the cabinet and pallet with a forklift use care to not damage cabinet with forks. Lift from the open ends of the pallet.
- For installations where the cabinet will be mounted at higher locations on a wall or pole, a crane or similar lifting equipment is recommended. Do not attempt to manually lift cabinet. Follow all local safety practices.

7.2.4 Removing Cabinet from Pallet

Perform the following steps to remove the cabinet from the pallet:

1. Locate the four pallet mounting bolts. There four bolts (one in each corner) in the bottom of the cabinet. Using a socket wrench or adjustable wrench, remove the four pallet mounting bolts.
2. Secure the cabinet door before moving the cabinet.

8 Cabinet Installation

This section describes the procedure for installing the RBS 884 Micro (1900 MHz) cabinet on a pad, pole, wall, or roof. Manual cabinet lifting is not recommended. The RBS 884 Micro (1900 MHz) cabinet requires mechanical lift assistance for wall or pole mounting. Attach any lift devices to lifting ears on rear of cabinet. If required, a temporary support structure can be installed prior to installing the cabinet. Position the cabinet on the support structure during installation. Do not stand under cabinet at any time.

8.1 Required Materials and Tools

8.1.1 Materials

Refer to the *CMS 8800 Site Materials Catalog* for general materials to install the RBS 884 Micro (1900 MHz) antennas and cables. Cabinet mounting materials are specified in the individual installation procedures.

8.1.2 Tools

The tools required to mount RBS 884 Micro (1900 MHz) cabinets are shown in Table 4-3 on page 4-12.

Table 4-3. Tools for Cabinet Installation

Product Number	Description
N/A	Mechanical lifting equipment capable of supporting cabinet weight (refer to local safety procedures)
N/A	Metric Tape Measure
N/A	Horizontal/Vertical Spirit Level
N/A	Pen
N/A	Drill
N/A	10 mm Drill Bit
N/A	M13 Socket Wrench
LSA 126 21/30	Torx Angle Screwdriver TX30

8.2 Installation on a Pad

The pedestal base mounting kit is used for pad mounting RBS 884 Micro (1900 MHz) cabinets. The pedestal base mounts on a concrete pad and is used as the base for the cabinet. A removable front panel allows easy access for installation of the pedestal, cabinet, and any cables.

Knock-outs are provided at both ends for routing the cables through the side walls of the pedestal base to the underside of the cabinet floor. The

knock-outs are not used if the cables enter the pedestal through conduits from beneath the pad.

Patterned vents allow sufficient air flow to enter the cabinet for the cabinet cooling/heating requirements.

1. Clean all litter from the foundation pad surface.

2. Dress the cable or conduit to not interfere with the pedestal base installation.

3. Remove any bolts and washers installed in the concrete anchors. Set the hardware aside to attach the pedestal base to the pad.

4. Locate the Pedestal Mounting Kit.

5. Place the pedestal base on the concrete pad. Figure 4-2 on page 4-13 illustrates the pedestal base. Align the pedestal base with the screw anchors that were installed when the concrete pad was poured. If the screw anchors were not installed at that time, use the pedestal base to mark the mounting holes for the anchors and drill. See Figure 4-3 on page 4-14 for the location of the mounting holes on the pedestal base.

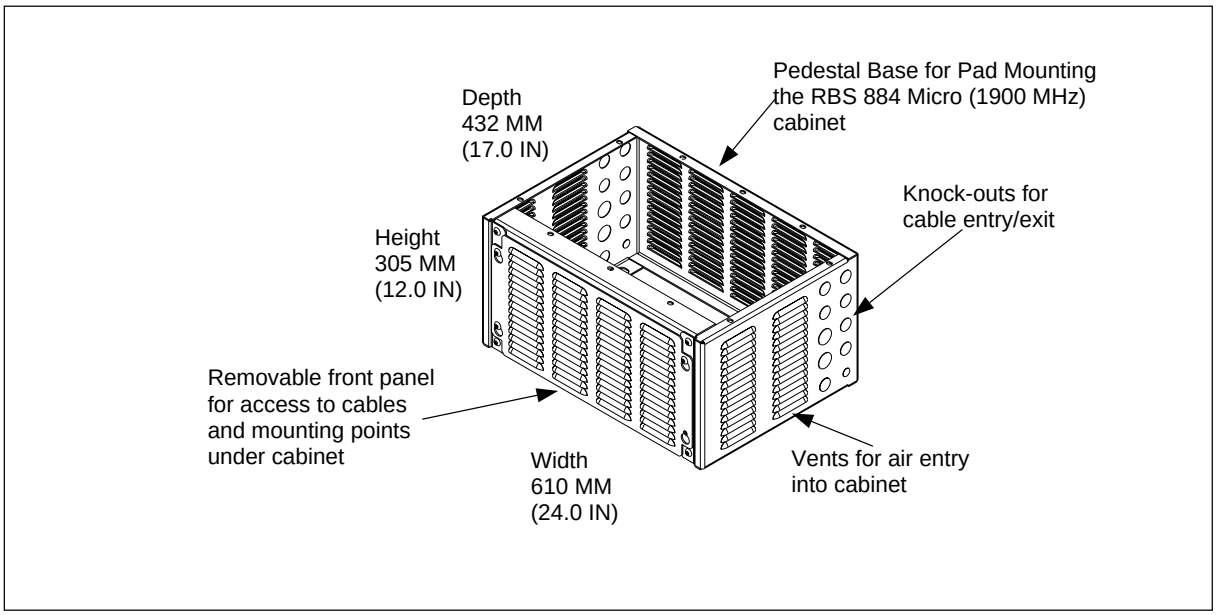

Figure 4-2. Pedestal Base

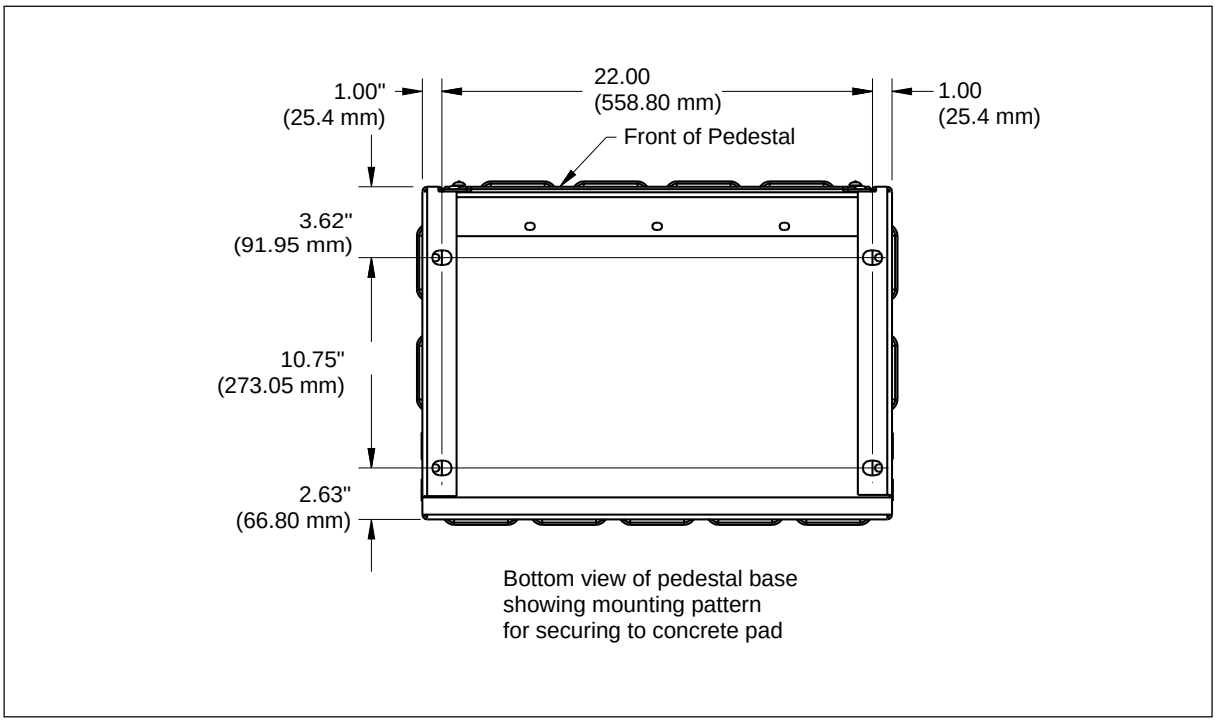

Figure 4-3. Bottom View of Pedestal Mount

6. Attach the pedestal base to the concrete pad and secure with the appropriate size bolts.

7.

DANGER!

To avoid injury or equipment damage, follow all local safety practices while lifting the cabinet. Wear all locally approved safety gear. Manual cabinet lifting is not recommended. Use proper lifting equipment. Attach any lifting devices to lifting ears on rear of cabinet. Keep bystanders away from work operations at all times.

Warning!

The RBS 884 Micro (1900 MHz) cabinet will tilt forward when raised by the lifting ears located on the rear of the cabinet.

Place the cabinet onto the pedestal pad mount. Ensure the cabinet is aligned with the pedestal.

8. Use the tamper-resistant wrench and remove the front panel on the pedestal base. Secure the cabinet to the pedestal base.

9. If not using cabinet mounted antennas, remove lifting ears from the cabinet (optional).

10. Install any cabinet mounted antennas.

8.3 Installation on a Pole

Warning!

For installations where the RBS 884 Micro (1900 MHz) cabinet will be pole mounted, a crane or similar lifting equipment is recommended. Ensure the cabinet is supported by the lifting equipment at all times during the installation. The cabinet will tilt forward when raised by the lifting ears located on the rear of the cabinet. Keep bystanders away from the work area at all times.

1. Locate the Pole Mounting Kit.

2. A detachable mounting bracket secures the cabinet to the pole. See Figure 4-4 on page 4-16.

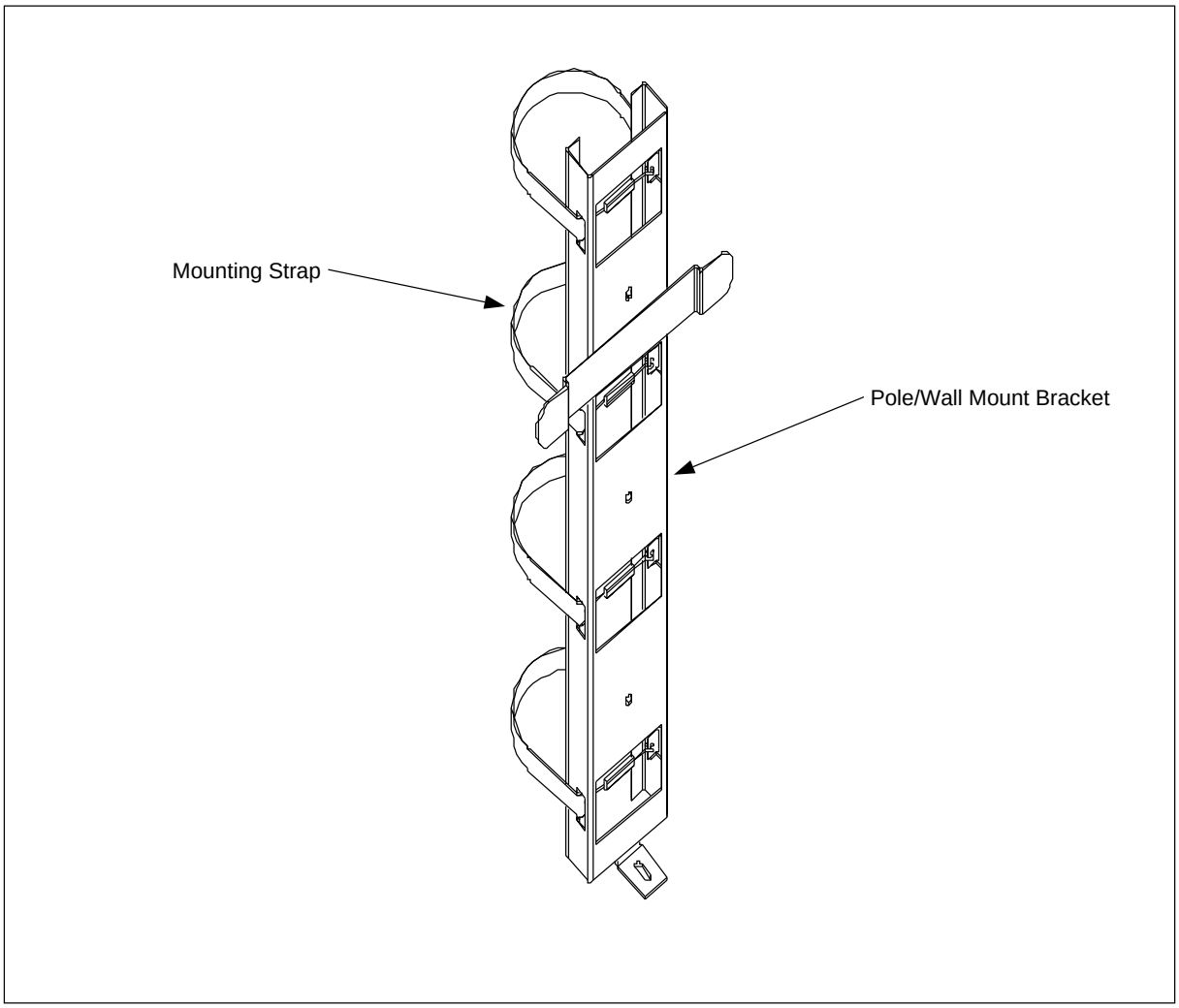

Figure 4-4. Pole-Mount Components

3. Check the components in the Pole Mounting Kit and verify the kit is complete.

4.

Note: If the pole-mount bracket is to be bolted to pole, mark and drill holes in the pole prior to lifting bracket into location. If two or more cabinets are to be installed, a minimum of 12 inches (305 mm) clearance must be maintained between cabinets.Install the pole-mount bracket on the pole at the desired height (see site survey documentation). Ensure the bracket is level and tighten the hardware. See Figure 4-5 on page 4-17.

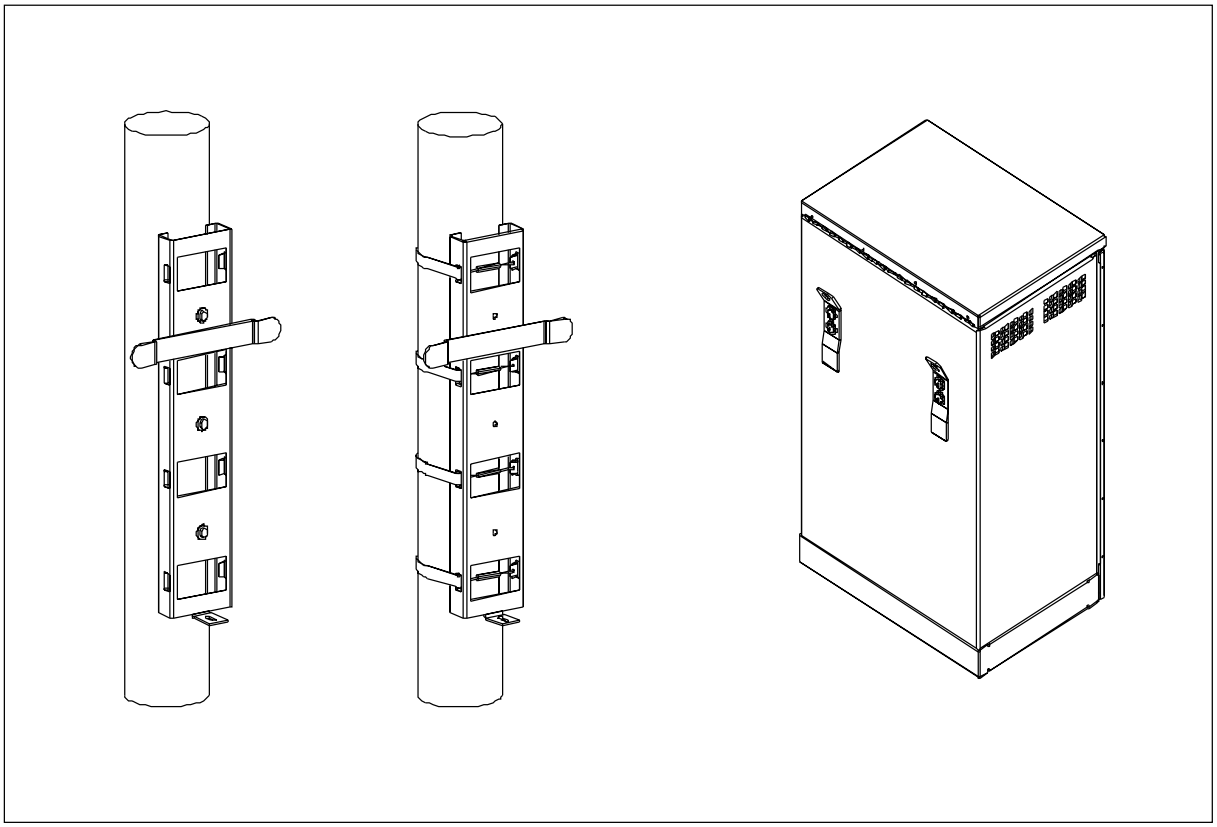

Figure 4-5. Rear View of Bracket Installed on Pole

5. Locate the four mounting bolts (one in each corner) in the base of the cabinet. Remove the four pallet mounting bolts. Remove the pallet and dispose in accordance with local practices.

6. Secure the cabinet door before lifting the cabinet.

7.

Warning!

Ensure the cabinet is supported by the lifting equipment at all times during the installation. The RBS 884 Micro (1900 MHz) cabinet will tilt forward when raised by the lifting ears located on the rear of the cabinet.

Caution!

Do not lift the cabinet over people. Do not let anyone work, stand, or pass under a cabinet while it is being lifted.

Attach the lifting cables or sling to the lifting ears on the mounting bracket. Carefully lift the cabinet and set the cabinet on the mounting bracket attached to the pole. See Figure 4-6 on page 4-18.

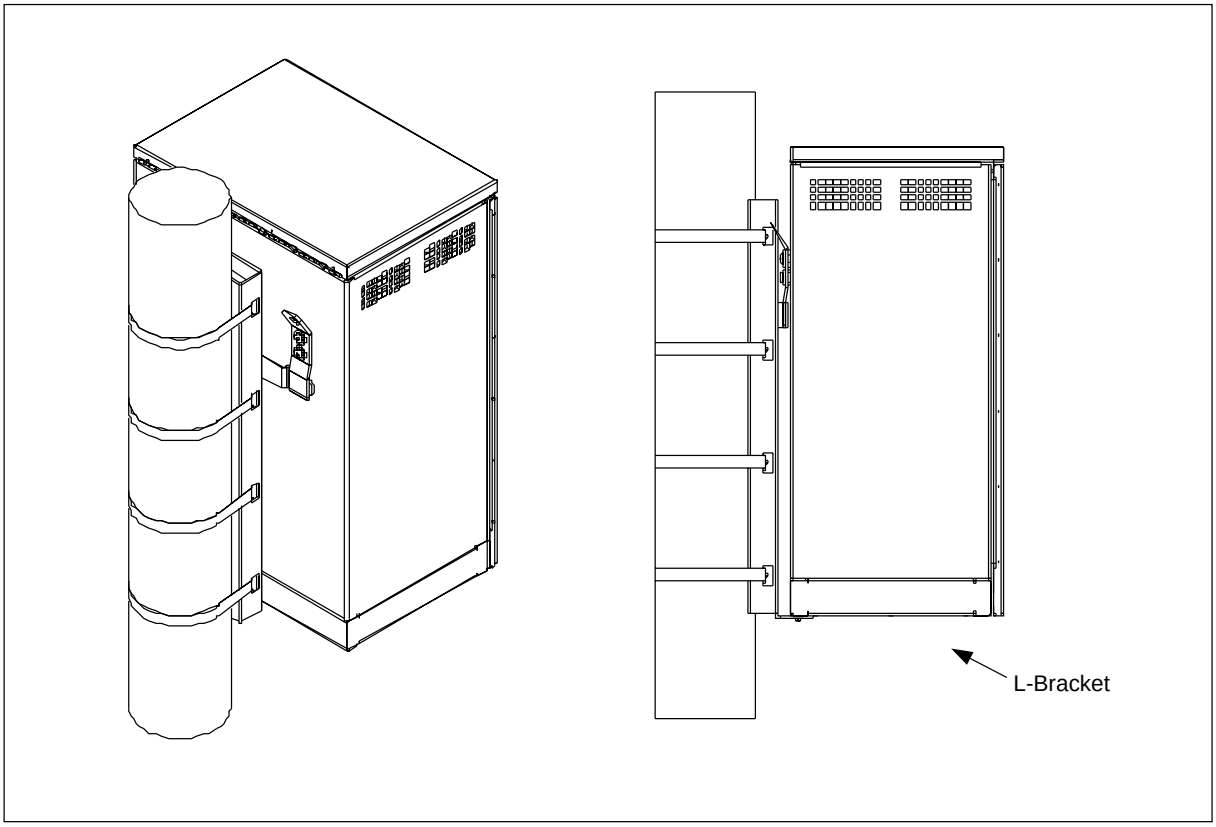

Figure 4-6. Cabinet Mounted on T-Bracket

8. If required, adjust cabinet horizontally to align with L-bracket.
9. Install the L-bracket to the bottom of the cabinet.
10. Install any cabinet mounted antennas.

8.4 Installation on a Wall

Warning!

Ensure the cabinet is supported by the lifting equipment at all times during the installation. The RBS 884 Micro (1900 MHz) cabinet will tilt forward when raised by the lifting ears located on the rear of the cabinet.

Caution!

A fully configured cabinet weighs over 105 kg (230 lbs). Ensure the wall can support the cabinet. Reinforce the wall structure if necessary.

1. Ensure the cabinet is upright
2. Locate the Wall Mounting Kit. See Figure 4-7 on page 4-19.

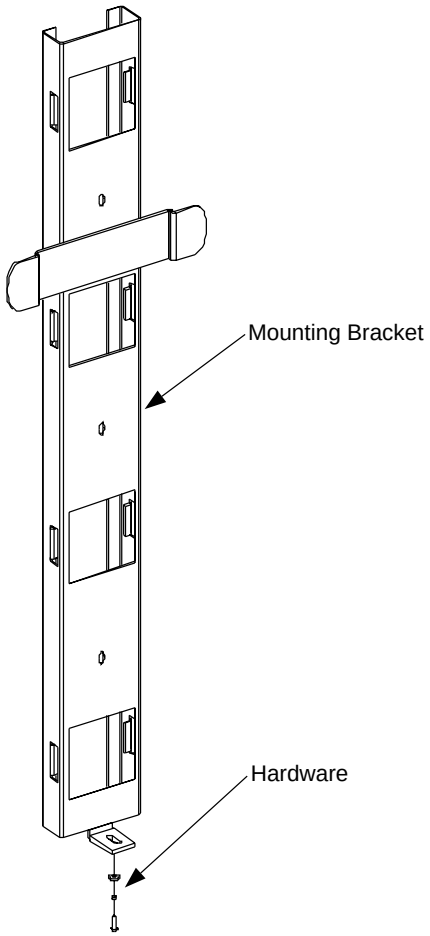

Figure 4-7. Wall-Mount Components

3. Check the components in the wall mounting kit and verify the kit is complete.
4. Locate the place on the wall where the bracket will be mounted and drill holes appropriate for the length of the anchor to be used. Table 4-4 on page 4-20 is a list of the suggested anchoring hardware.

Table 4-4. Wall Anchors

Type of Wall	Recommended Anchor
Masonry	4-1/4-in. x 1-1/4-in. hammer drive anchors
Wood	4-1/2-in. No. 14 RH galvanized wood screws
Hollow	Hollow wall mounting not recommended

5. Secure the bracket to the wall using an appropriate anchor. See Figure 4-8 on page 4-20. Level the bracket before tightening the bolts.

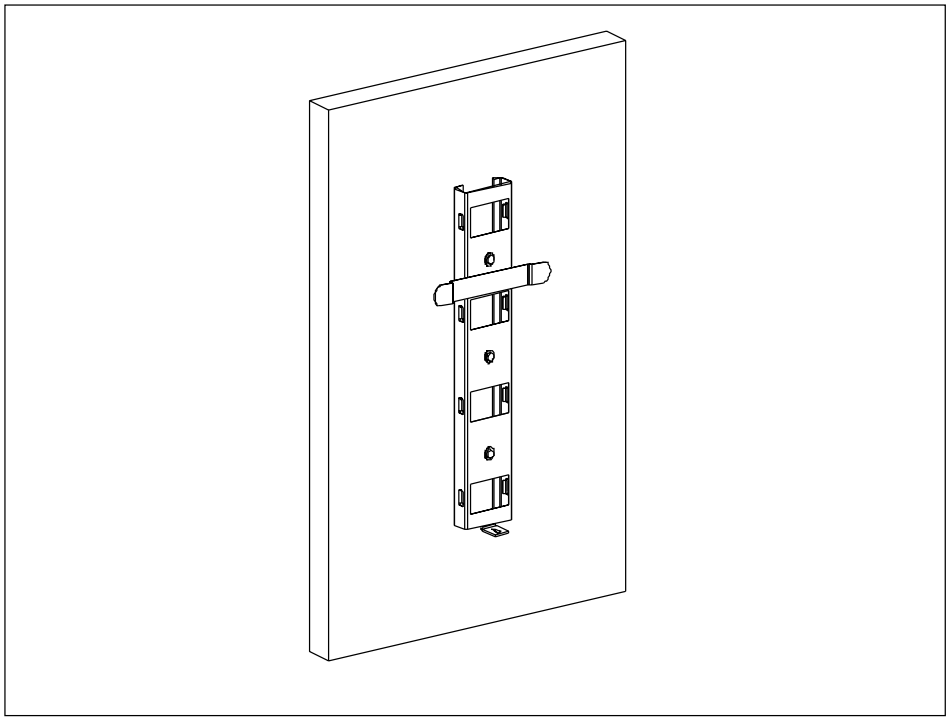

Figure 4-8. Installing Cross Arm to Wall

6. Locate the four mounting bolts (one in each corner) in the base of the cabinet. Remove the four pallet mounting bolts. Remove the pallet and dispose of it in accordance with local practices.

7. Secure the cabinet door before lifting the cabinet.

8.

Caution!

A fully configured cabinet weighs 105 kg (230 lbs). Mechanical lifting equipment is required to lift cabinet into position. Manual lifting is not recommended.

Lift the cabinet and place it on the cross arm bracket.

9. If required, adjust cabinet horizontally to align with L-bracket.

10. Install the L-bracket to the bottom of the cabinet. See Figure 4-9 on page 4-21.

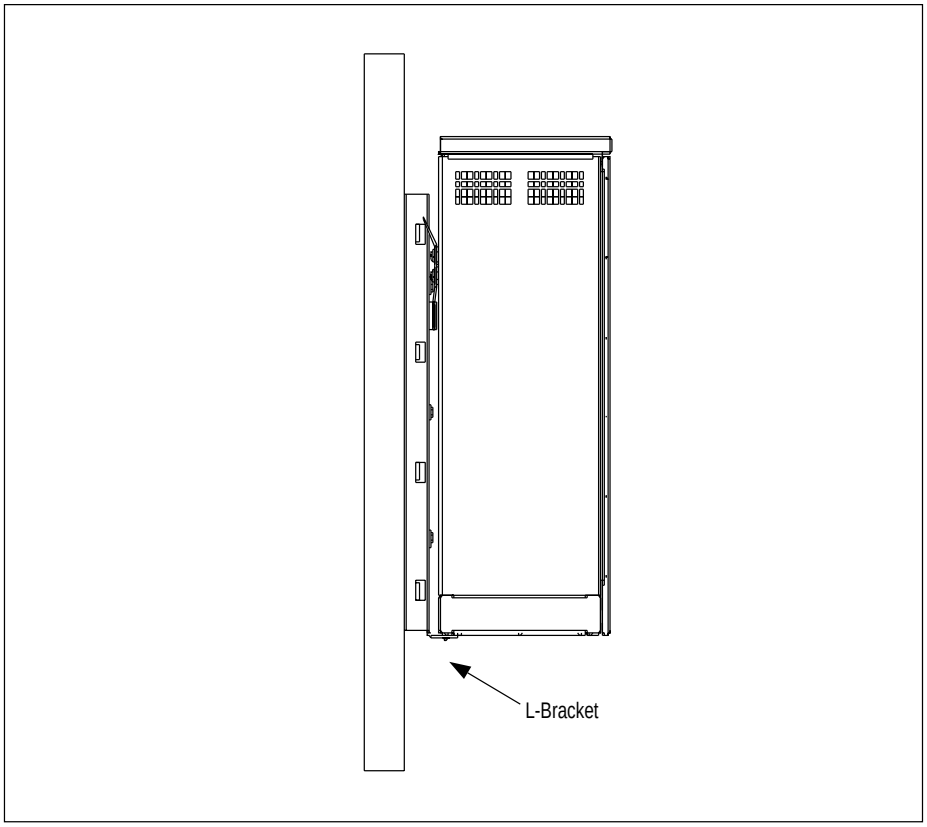

Figure 4-9. Wall Mounted cabinet

11. Install any cabinet mounted antennas.

8.5 Installation on a Roof

1. Locate the four base mounting bolts (one in each corner) in the bottom of the cabinets.

2. Remove the four pallet mounting bolts. Remove the pallet and dispose of in accordance with local practices.

3. Secure the cabinet door before lifting the cabinet.

4. Roof mounted cabinet installations vary depending on the site configuration and type of roof. Refer to the site specific engineering specifications for further information on a roof mounted cabinet.

9 Cable and Power Connections

9.1 Grounding

Warning!

Follow all local safety practices, observe all general safety precautions, and wear all approved safety equipment when performing any grounding procedures. Perform all required testing before and after cabinet installation. Only qualified personnel or electricians should install the ground connections.

Caution!

Ensure all local all building codes and National Electrical Code® (NEC) are met when installing grounding.

Note: Ensure all ground connections are clean and free of oxidation or rust. Clean all contact surfaces as required

9.1.1 Perimeter Ground (Pad-Mount only)

1. Install the earth ground or ground ring before installing the cabinet.
2. Ensure that the earth ground or ground ring is connected to the principal ground.
3. Connect all antennas to a ground point according to the *Site Engineering Manual*, specific engineering specifications, and installation drawings.
4. Coax transmission cable (50 ohm) passes through the supplied lightning surge suppressors on the earthing plate.
5. Use an ammeter and check to ensure there is no AC or DC current on cables already terminated to the earth ground point. If current is present, do not proceed with further grounding until the current no longer exists.

   Note: The field ground can accept a 10-gauge solid to a 2-gauge stranded copper ground wire.

9.1.2 Cabinet Ground Cabling

The RBS 884 Micro (1900 MHz) earth ground is connected to an external grounding lug located on the bottom shell of the cabinet.

9.2 Installing Batteries

Warning!

Equipment temperatures can reach up to 60°C (140°F). Use extreme caution when working around the battery enclosure or other internal components.

Caution!

To avoid injury or equipment damage, follow all locally approved safety practices and wear appropriate safety equipment when working with batteries. Turn off power to the 40A breaker so there is no power supplied to the cabinet.

A +24Vdc battery system is standard with the cabinet for two minutes of battery reserve. Two 12V batteries are installed in the battery tray in the lower left area of the cabinet. The batteries are connected in series by a copper strap.

Note: All batteries are configured with steel cases for applications where temperatures can reach up to 60°C (140°F).

Use the following steps to install the batteries into the tray and connect the batteries to the system:

Note: The float is calibrated for +27.0 to 27.6 Vdc at the batteries. The float is set at the factory and sealed. This setting is not adjusted by the user.

Note: Torque at the bolt is 50 in-lbs maximum.

1. Position the **BAT** circuit breaker on the left side of the AC/DC Distribution Box to OFF. See Figure 4-10 on page 4-24.
2. Remove the four screws from the battery cover and remove the cover from the battery compartment.
3. If installed, remove the battery hold-down bracket(s) from left wall of battery compartment.
4. Remove the battery tray from the battery compartment. Ensure battery heater remains in position in bottom of compartment.
5. Install the batteries into the battery tray as illustrated in Figure 4-11 on page 4-25. Attach the hold-down bracket to the battery tray.
6. Connect the center terminals (positive terminal of battery 1 to negative terminal of battery 2) with the copper strap. Do not tighten the negative terminal of battery 2 at this time. See Figure 4-11 on page 4-25

7. Connect the battery cable assembly to the batteries as follows:
   - Connect the 8-gauge red cable to the positive terminal (+) of battery 2. See Figure 4-11 on page 4-25.

     Note: Ensure that the battery connections will not contact wall of battery compartment or cover. Reposition connectors as necessary to provide clearance.
   - Connect the 8-gauge black cable to the negative terminal (-) of battery 1.
   - Connect one of the 18-gauge white wires labeled POST to the negative terminal of battery 1. Connect the other 18–gauge white wire to the negative terminal of battery 2.
8. Tighten all remaining battery connections.
9. Install the battery tray assembly in the battery compartment. Ensure the battery cable assembly is not pinched against the battery compartment. Ensure the battery heater is in proper location under battery tray.
10. Place the hold-down bracket over the screw on the side wall of the battery compartment. Secure with a hex nut.
11. Connect the power connector of the battery cable assembly to the connector at the top of the battery compartment.
12. Connect the Failed Battery Sensor connector.
13. Install the battery cover on the battery compartment with the four screws.

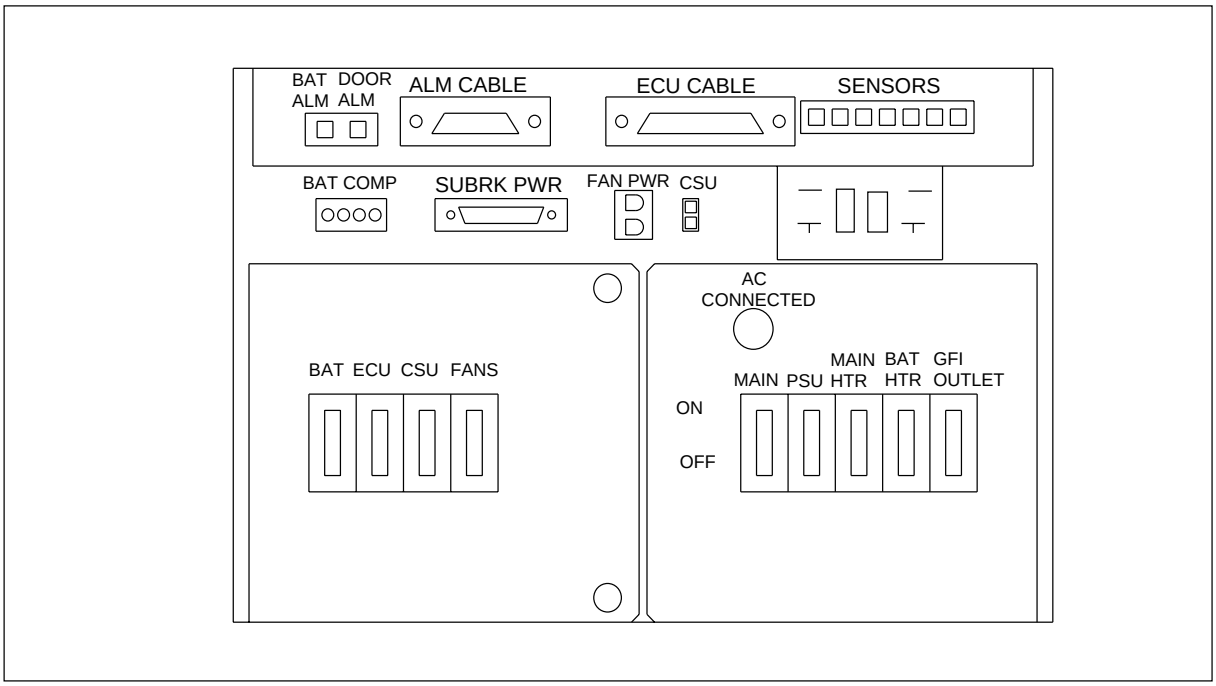

Figure 4-10. AC/DC Distribution Box

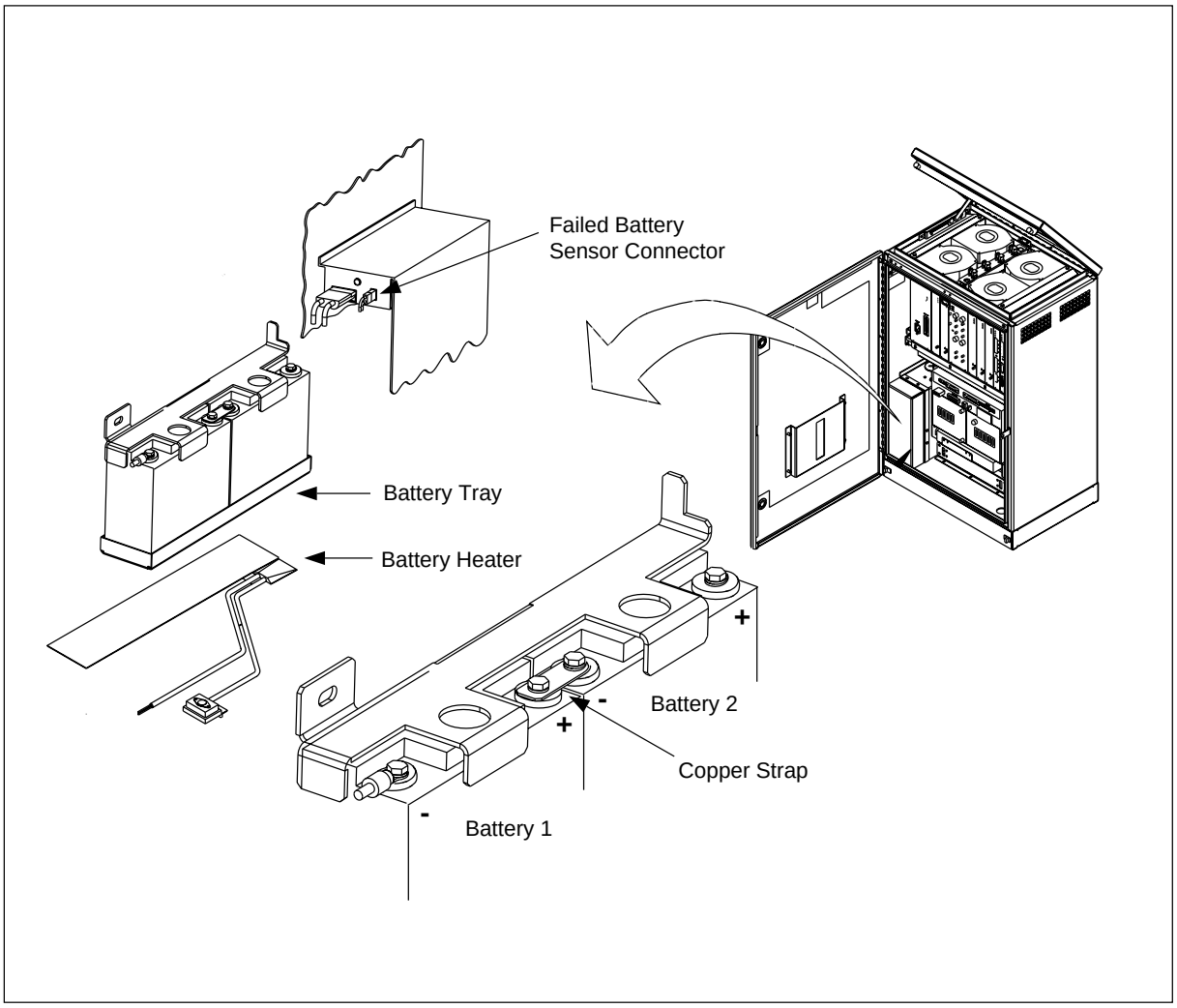

Figure 4-11. Battery Installation in Cabinet

9.3 Installing AC Power

DANGER!

AC power can result in death, injury, or equipment damage. Observe all safety precautions as specified by local building codes and the National Electrical Code® (NEC). All procedures should be performed by a licensed electrician.

DANGER!

Before installation, bond the AC grounding electrode system to an AC main service power neutral/ground bus. Contact the local power company or the appropriate local personnel for information about codes or restrictions for the installation.

Note: The cabinet requires 110V, 60 Hz or 230V, 50 Hz, two-wire plus ground commercial power. All AC equipment from the service drop to the pad is provided locally. Consult the NEC and local codes for the correct wire size, as the wire size depends on the distance to the source. Figure 4-12 on page 4-27 shows the location of the AC/DC Distribution Box in the cabinet.

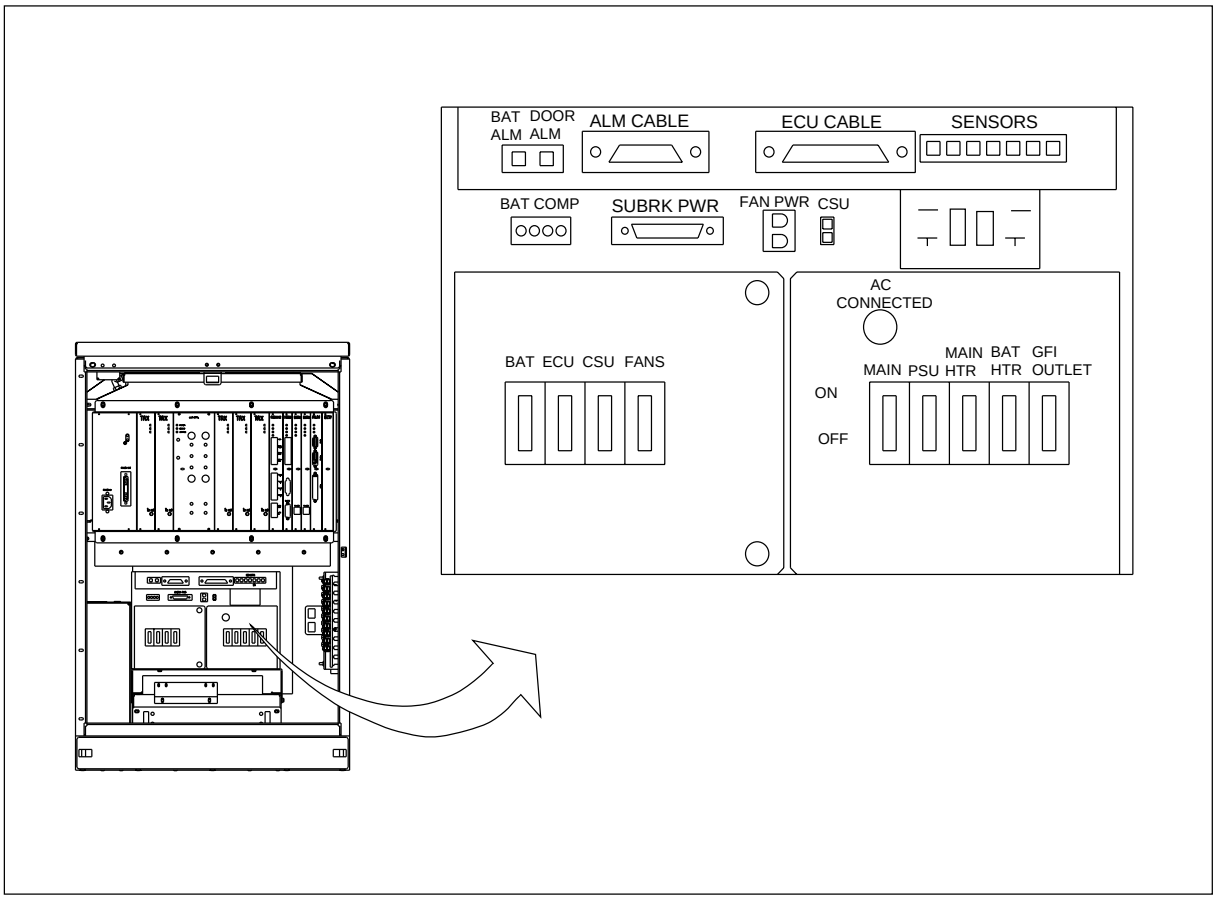

Figure 4-12. AC/DC Distribution Box

1. Before installing the AC power, ensure that the AC ground system is installed. The ground system must be in compliance with local practices and building codes. Refer to the *Site Engineering Manual* for more information.
2. Open the cabinet and open the AC/DC Distribution Box.
3. Install liquid-tight conduit through bottom of cabinet up to 90° conduit fitting located on right side of AC/DC Distribution Box.
4. Ensure the opening in the bottom of the cabinet is sealed with a conduit fitting or other device to prevent air and water leakage into cabinet.
5. Pull AC and ground wires through conduit into the AC/DC Distribution Box.
6. Connect ground wire to ground bus inside AC/DC Distribution Box.
7. Connect neutral wire to neutral bus inside AC/DC Distribution Box.
8. Remove clear cover from rear of circuit breakers and install line wire to the bus bar on the Main circuit breaker.
9. Replace clear cover on rear of circuit breakers and close AC/DC Distribution Box.

9.4 Cable Installation

This section describes installing cables in the cabinet. Use the procedure for one of the following types of installation:

- Pedestal (Pad) Mount, Section 9.4.1 on page 4-28
- Pole Mount, Section 9.4.2 on page 4-32
- Wall Mount, Section 9.4.3 on page 4-33
- Roof Mount, Section 9.4.4 on page 4-34
- Site Expansion, Section 17 on page 4-64

Caution!

Ensure all site grounding is installed and functioning before installing cables. Observe all local safety precautions and wear all appropriate locally approved safety equipment during installation procedures.

9.4.1 Pedestal Mount Cable Installation

Caution!

When installing coaxial cable or cable conduit, follow the minimum bending radius requirements for the type of cable being installed.

1. Using a tamper resistant wrench, remove the front panel from the pedestal base so cables or conduit can be routed to the cabinet. See Figure 4-13 on page 4-30
2. Route the antenna and T1(E1) conduit into the base of the cabinet. See Figure 4-13 on page 4-30.
3. Route AC power and ground conduit into base of cabinet.
4. Separate the cables into groups according to cable type. Secure the cables with tie-wraps until they are ready to be installed.
5. Route the antenna jumper cables into the base of the cabinet and connect them to the antenna connectors on the bottom of the earthing plate. See Figure 4-14 on page 4-31.
6. Bond and ground the T1(E1) drop wires according to local practices before installing them into the cabinet.

7. Route the T1(E1) cable through conduit into the base of the cabinet. Connect cable to the T1(E1) Primary Surge Suppressor located on the right-hand side of the cabinet. See Figure 4-15 on page 4-32. Note that the connector block is grounded to the I/O plate at the factory.

   Note: The hex-nut activators on the T1(E1) Primary Surge Suppressor block are colored white for tip wires and orange for ring. The large ports under the activator clock accommodate 18.5 to 20 AWG wire termination. The small ports accommodate 22 to 24 AWG wire termination.

   Note: Wire stripping or staggering is not needed when using the T1(E1) Primary Surge Suppressor block. The Primary Surge Suppressor provides straight-through access for wire terminations.

8. Terminate the wires on the connector block as follows:

   a. Trim the ends of the wire. Split the drop leads approximately two inches. Using a standard 216–type wrench, carefully back off the activator screw until you feel a stop. The wrench will lift up approximately 1/4–inch into the open position.

   b. Insert the wire into the large or small port on the side of the activator. Tighten the hex nut on the top of the activator until the tensions stops. DO NOT OVERTIGHTEN.

   c. If testing or if a talk pair is needed, insert test leads into the hex nut on the appropriate activator.

   d. To reinstall wires, trim the wire ends and split the drop wire leads approximately two inches and terminate according to the above procedure.

   e. After wiring, keep all activators in the down position for good housekeeping.

9. After all cables are installed, turn on the AC power.

10. Watch the LEDs on each board and that the unit is operating properly. Consult the troubleshooting part of the Installation and Maintenance manual for units that are malfunctioning.

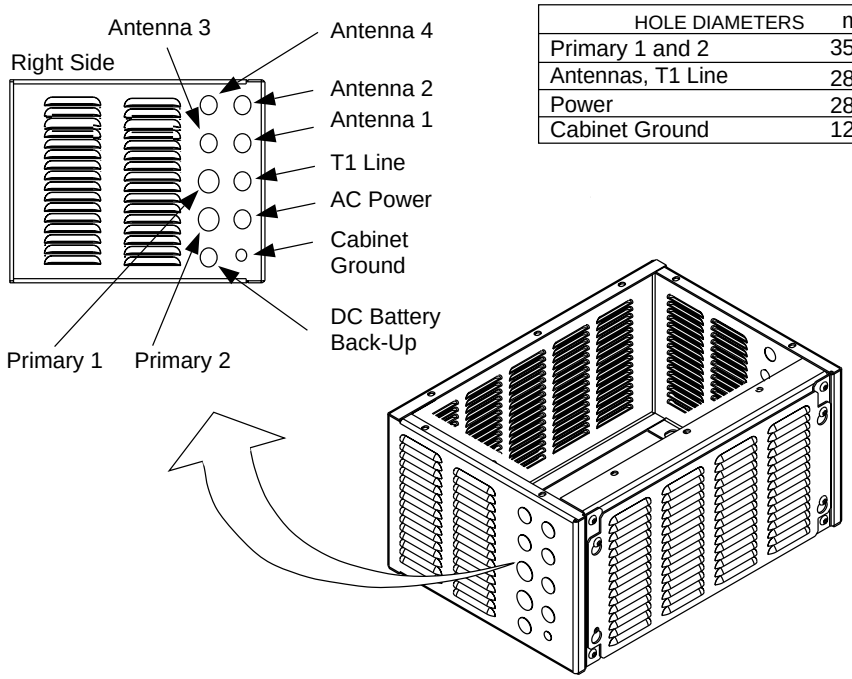

HOLE DIAMETERS	mm	inches
Primary 1 and 2	35.05	1.38
Antennas, T1 Line	28.70	1.13
Power	28.70	1.13
Cabinet Ground	12.70	.50

Figure 4-13. Pedestal Mount

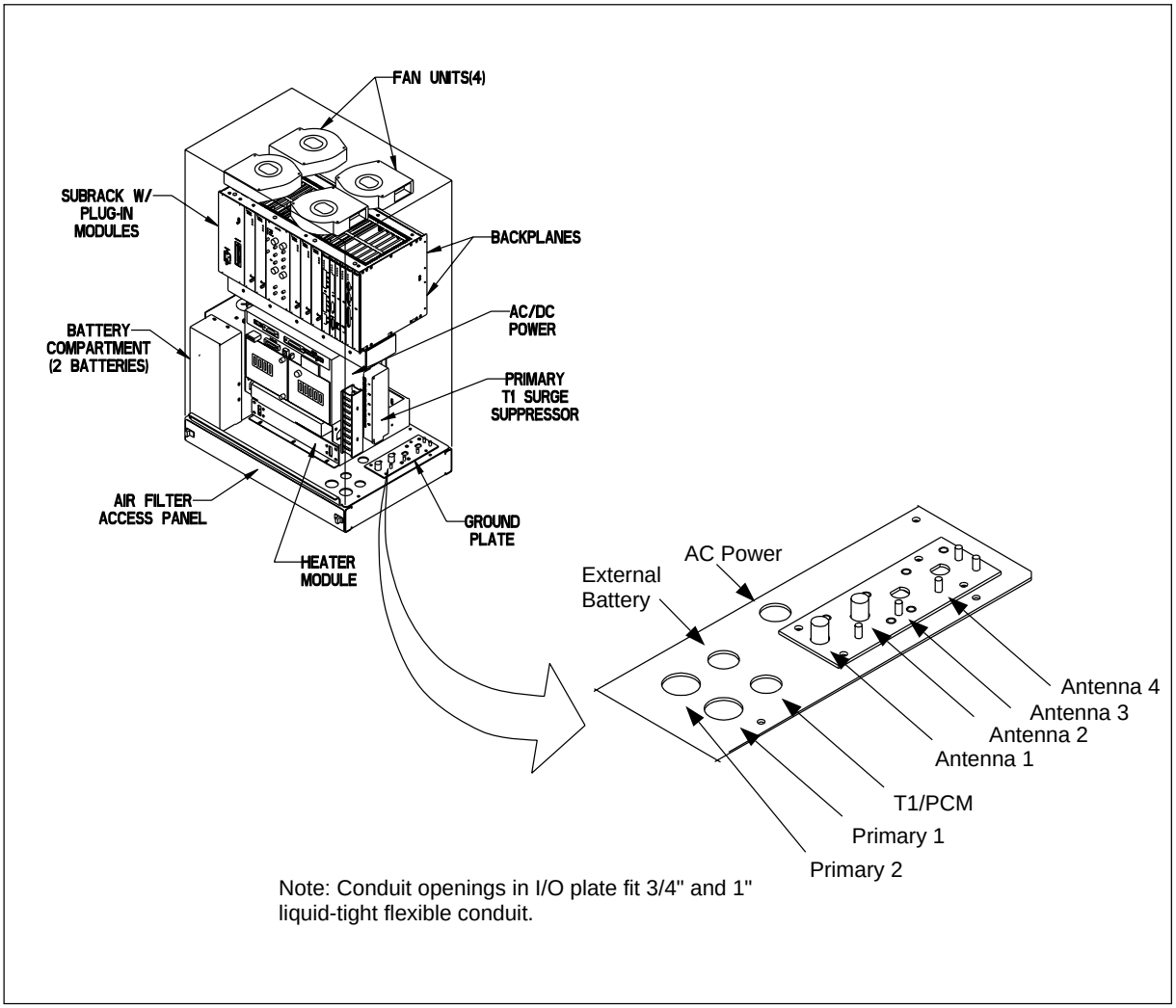

Figure 4-14. Cabinet I/O Plate

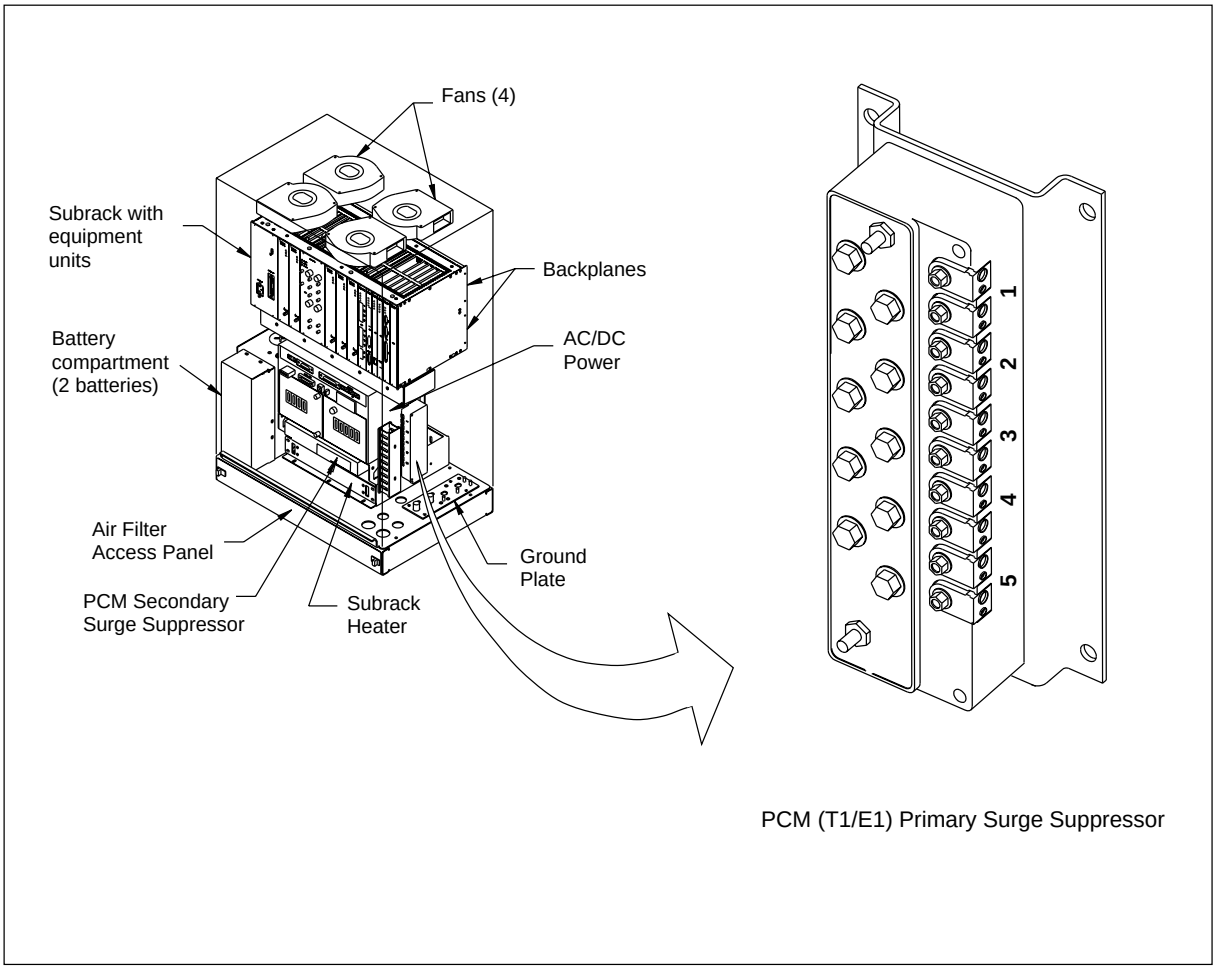

Figure 4-15. Cabinet Surge Suppressor

9.4.2 Pole Mount Cable Installation

1. Route the antenna cable and T1(E1) conduit into bottom of cabinet. The T1(E1) conduit is terminated at the I/O plate.
2. Slide heat shrink tubing over cable connector and connect the antenna jumpers to the antenna surge suppressors on I/O plate.
3. Apply heat to heat-shrink tubing to seal connector.
4. Route T1(E1) cables through conduit connect the cables to the surge protector. Refer to Table 4-5 on page 4-33
5. After all cables are installed, turn on the AC power.
6. Watch the LEDs on each board and verify the unit is operating properly. Consult the troubleshooting part of the Installation and Maintenance manual for units that are malfunctioning.

Table 4-5. T1 Input Connections to Primary Surge Suppressor

Terminal No.	T1 Cable	Pair No.	Wire
1 (white)	In	1	Tip
1 (orange)	In	1	Ring
2 (white)	In	2	Tip
2 (orange)	In	2	Ring
3 (white)	Out	1	Tip
3 (orange)	Out	1	Ring
4 (white)	Out	2	Tip
4 (orange	Out	2	Ring
5 (white)	Not used		
5 (orange)	Not used		

Table 4-6. T1 Output Connections to Primary Surge Suppressor

RJ45 Conn	Pin No.	T1 Cable	Pair No.	Wire
J1	5	In	1	Tip
J1	4	In	1	Ring
J1	1	In	2	Tip
J1	2	In	2	Ring
J2	5	Out	1	Tip
J2	4	Out	1	Ring
J2	1	Out	2	Tip
J2	2	Out	2	Ring

9.4.3 Wall Mount Cable Installation

1. Route the antenna cable and T1(E1) conduit into bottom of cabinet. The T1(E1) conduit is terminated at the I/O plate.
2. Slide heat shrink tubing over cable connector and connect the antenna jumpers to the antenna surge suppressors on I/O plate.
3. Apply heat to heat-shrink tubing to seal connector.
4. Route T1(E1) cables through conduit connect the cables to the surge protector.
5. After all cables are installed, turn on the AC power.
6. Watch the LEDs on each board and that the unit is operating properly. Consult the troubleshooting part of the Installation and Maintenance manual for units that are malfunctioning.

9.4.4 Roof Mount Cable Installation

Cabling of the roof mounted cabinet depends on the type of mounting kit being used. Any of the three mounting kits, pedestal, pole, or wall, may be used for the roof mount. Based on which mounting kit used, follow the cabling instructions for that kit.

10 Setting the Unit Switches

Before the RBS 884 Micro (1900 MHz) is powered up, the REMUX and EMRPM switches must be set. This section describes the procedure for setting the REMUX and EMRPM switches.

Prior to starting, review electrostatic discharge instructions in Section 3 on page 4-5.

For information on removing the REMUX or EMRPM, refer to the *Hardware Replacement RBS 884 Micro (1900 MHz)* part of this document.

The units are shown in Figure 4-16 on page 4-34.

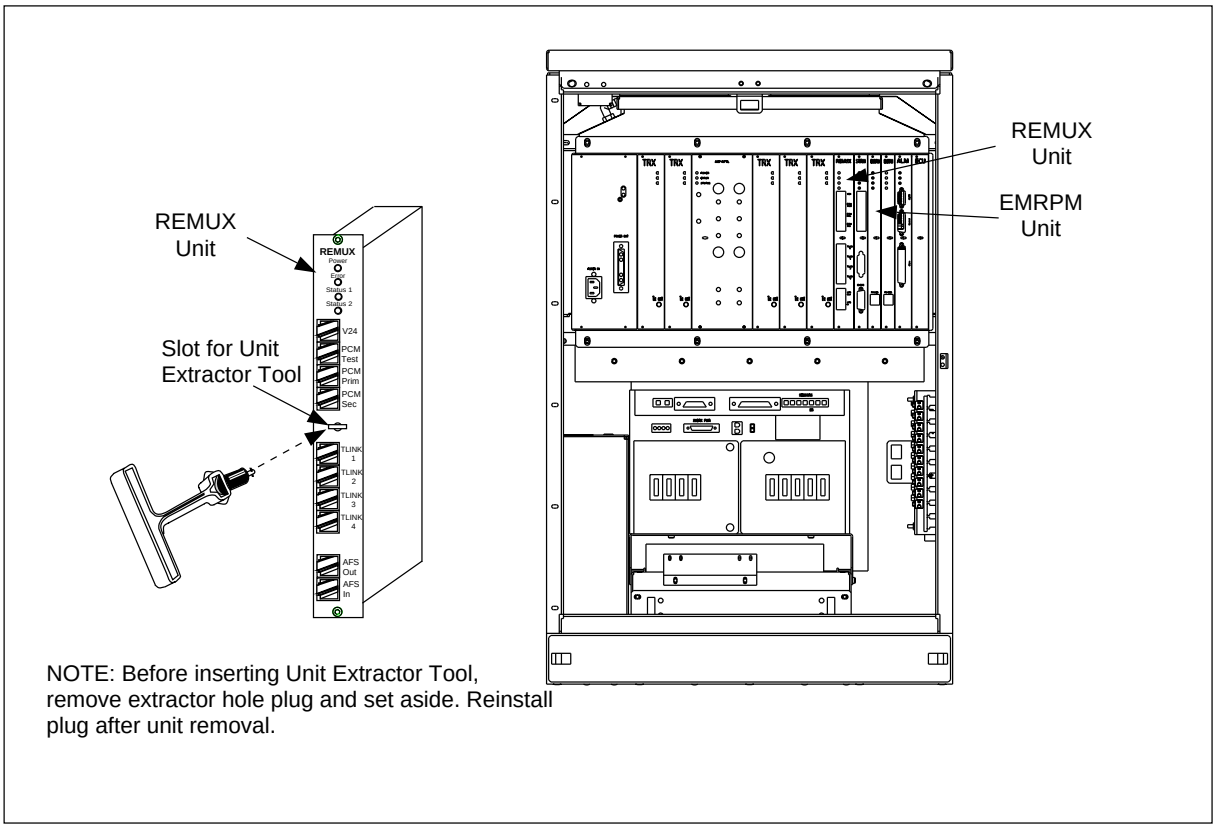

Figure 4-16. Cabinet Units for Switch Settings (Example with a Main Cabinet)

10.1 Prerequisites and Tools

10.1.1 Prerequisites

The following site specific data for setting the switches on the units must be available in the *Configuration Data* in the *Site Installation Documentation*:

- PCM line impedance
- PCM primary line specification (length or attenuation)
- PCM secondary line specification (length or attenuation)
- PCM primary line code and frame mode
- PCM secondary line cascading
- Control Signaling Link (CLC) extraction time slot
- PCM jitter and wander limit
- Frequency

10.1.2 Tools

The tools shown in Table 4-7 on page 4-35 are required for setting the switches on the units:

Table 4-7. Tools for setting the Unit Switches

Product Number	Description
LYB 250 01/14	ESD Wrist Strap and Cable
LTT 601 82	From Torque Wrench set: - Torque Wrench for torque 0.6 Nm (to use with the Torx bit TX10 - Torx bit TX10 (for the unit screws)
LTD 117 02 and LTD 117 12	Unit Extractor Tool (Handle + Button)
	Small screwdriver, pen, or simular tool to set switches

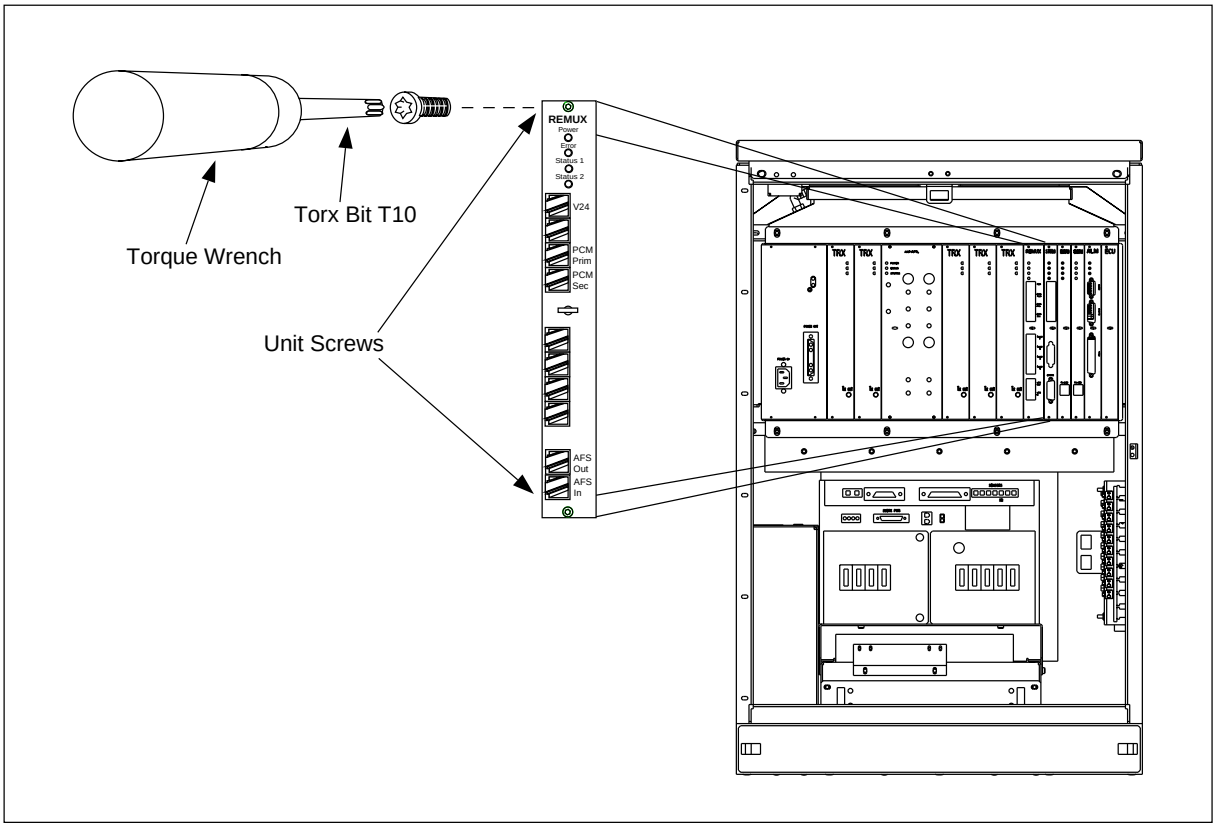

Figure 4-17. Torque Wrench with Torx TX8

10.2 REMUX Switch Settings

1. Attach the ESD strap to your wrist and connect the free end of the strap cable to an appropriate ground conductor in the cabinet.

2. Use the torque wrench with the Torx TX10 to loosen the top and bottom screws on the front of the REMUX unit.

   Note: Do not touch any components or connector pins on a circuit board.

3. Remove the REMUX unit from the cabinet using the extractor tool as shown in Figure 4-16 on page 4-34. Save the extractor hole plug and replace plug after installing the REMUX unit.

4. Locate the 8-pole dip switch at the top front of the REMUX unit.

5. Set the unit to the PCM line impedance by setting the switches as shown in Figure 4-18 on page 4-37. The line impedance can be found in the *Configuration Data* in the *Site Installation Documentation*.

PCM Line Impedance

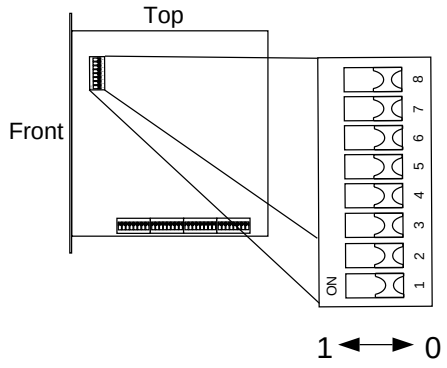

Line Impedance	Switch Settings (1-8)	REMUX Boards
75 ohm (E1)	0111 1101	ROF 367 211/3
100 ohm (T1)	1011 1110	ROF 367 211/1
120 ohm (E1)	0000 0000	ROF 367 211/3

Note: The example shows the REMUX set for 120 ohm line impedance (E1)

Figure 4-18. Setting the PCM Line Impedance

6. Locate the 32-pole dip switch at the bottom of the REMUX unit.

   Note: When a dip switch is in its lower position (with the REMUX board oriented as shown in the following figures), the value is always 0 (zero) regardless of what is written on the switch.

7. Check with the *Configuration Data* in the *Site Installation Documentation* to determine whether the settings for the PCM Primary line are decided by the length, attenuation, or impedance of the line. Set the switches for the appropriate use as follows:

   - If line length is used (T1 Short Haul), see Figure 4-19 on page 4-38.
   - If impedance is used (for E1 transmission, and T1 FCC (Federal Communications Commission) part 68, option A), see Figure 4-20 on page 4-38.

   Note: For distances exceeding 40 meters, customer supplied Channel Service Units (CSU) should be used.

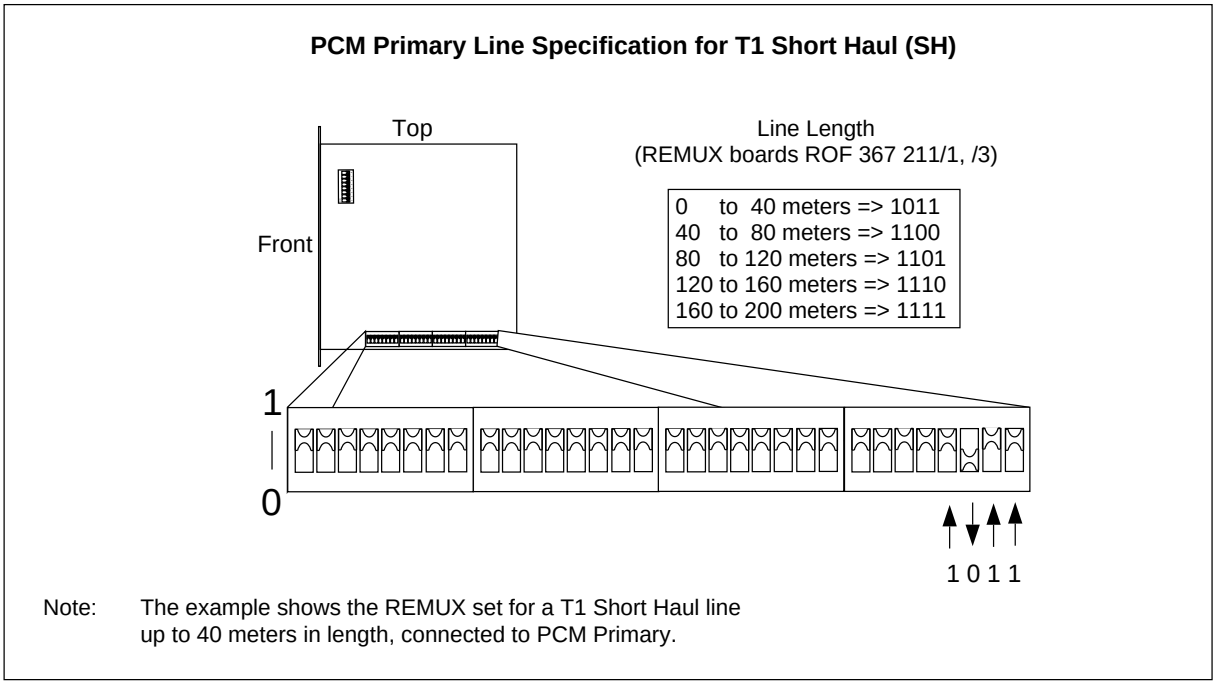

Figure 4-19. Settings for the PCM Primary Line Specification, T1 Short Haul

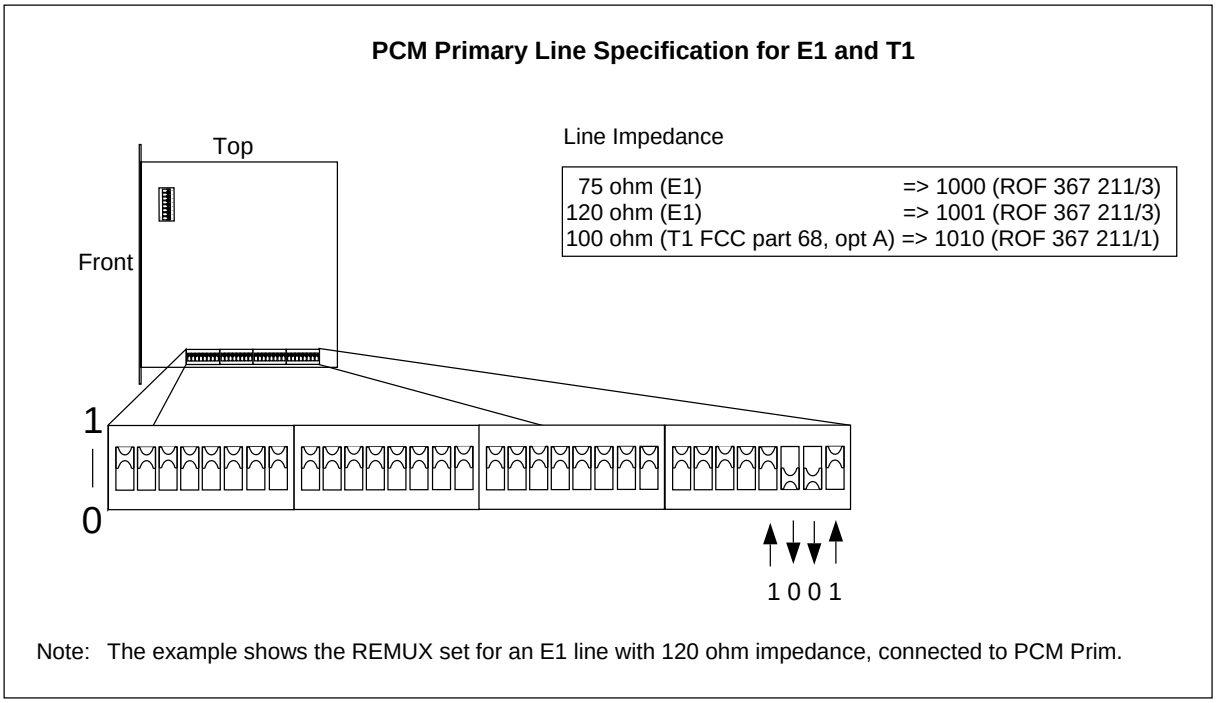

Figure 4-20. Settings for the PCM Primary Line Specification, E1 and T1

8. Check with the *Configuration Data* in the *Site Installation Documentation* to determine whether the settings for the PCM

Secondary line are decided by the length, attenuation, or impedance of the line. Set the switches for the appropriate use as follows:

- If line length is used (T1 Short Haul), see Figure 4-21 on page 4-39.
- If impedance is used (for E1 transmission, and T1 FCC part 68, option A), see Figure 4-22 on page 4-40.

Note: For distances exceeding 40 meters, customer supplied CSUs should be used.

PCM Secondary Line Specification for T1 Short Haul (SH)

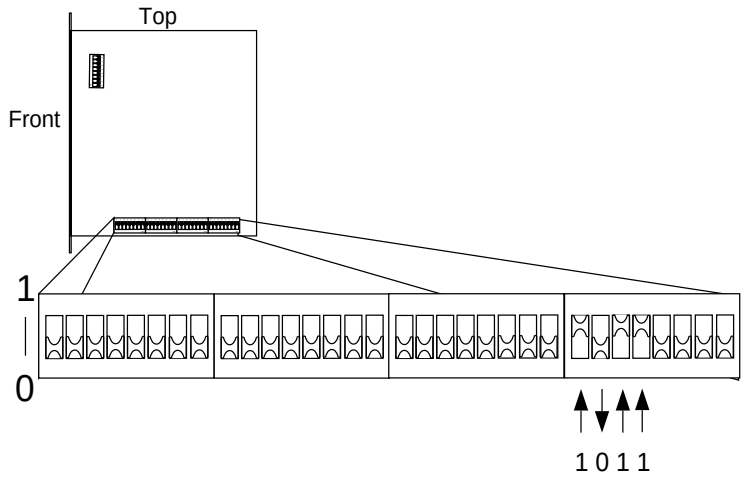

Line Length
(for REMUX boards
ROF 367 211/1, /3)

0	to 40 meters => 1011
40	to 80 meters => 1100
80	to 120 meters => 1101
120	to 160 meters => 1110
160	to 200 meters => 1111

Note: The example shows the REMUX set for a T1 Short Haul line up to 40 meters in length, connectod to PCM Secondary.

Figure 4-21. Settings for the PCM Secondary Line Specification, T1 Short Haul

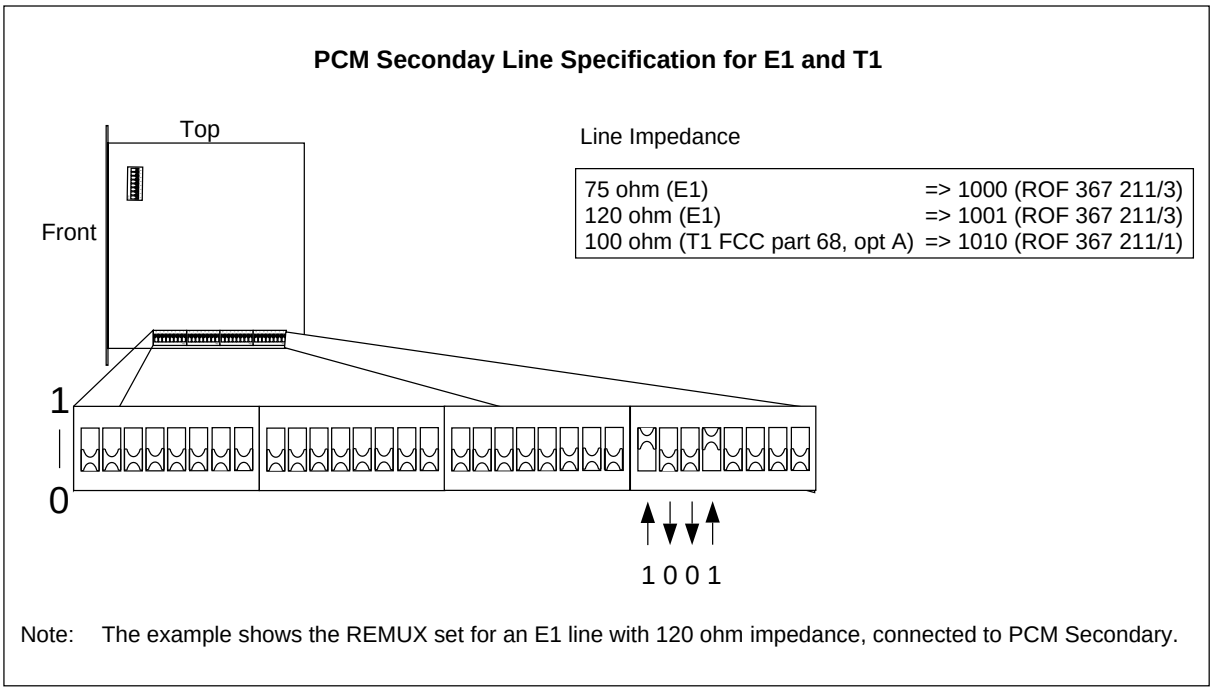

Figure 4-22. Settings for the PCM Secondary Line Specification, E1 and T1

9. Set the PCM primary line code and frame mode, as shown in Figure 4-23 on page 4-40, in accordance with the *Configuration Data* in the *Site Installation Documentation.*

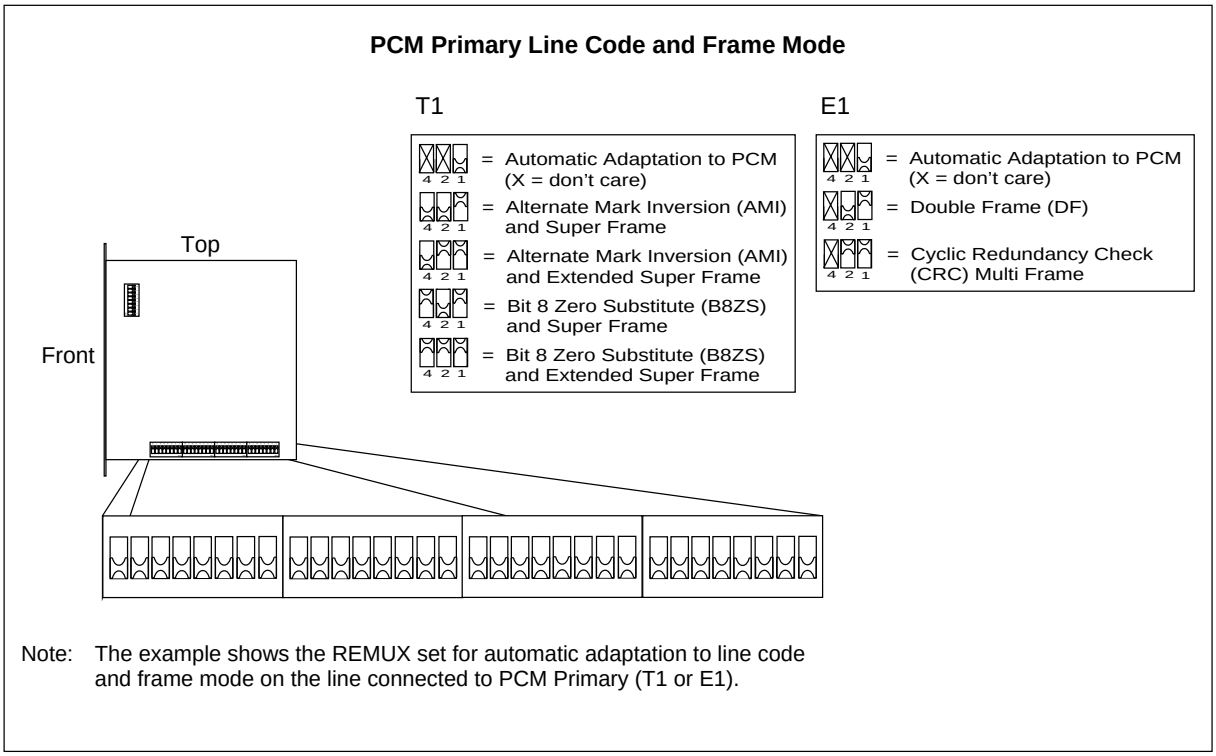

Figure 4-23. Setting for PCM Primary Line Code and Frame Mode

10. Set the switch to enable or disable the PCM secondary line for cascading, as shown in Figure 4-24 on page 4-41 in accordance with the *Configuration Data* in the *Site Installation Documentation*.

PCM Secondary Line Cascading

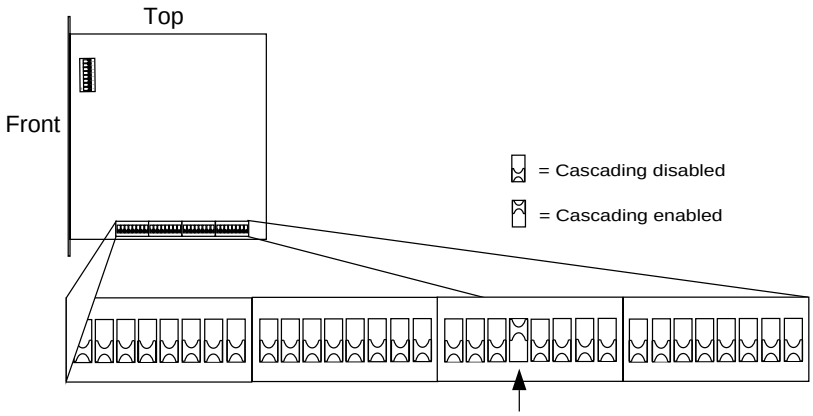

Note: The example shows the REMUX set to enable the PCM Secondary line for cascading.

Figure 4-24. Enabling/Disabling the PCM Secondary Line for Cascading

11. For an E1 PCM line, select the time slot (TS) for Control signaling Link (CLC) extraction, as shown in Figure 4-25 on page 4-42 in accordance with the *Configuration Data* in the *Site Installation Documentation*.

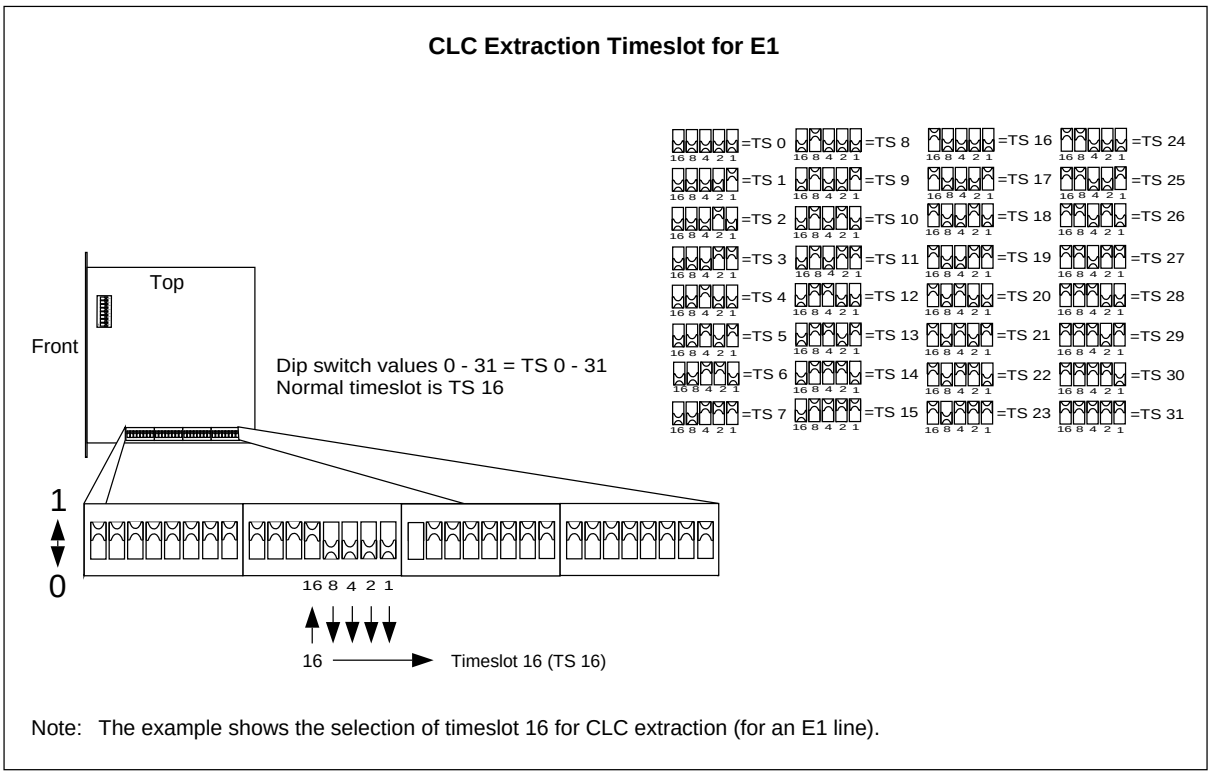

Note: The example shows the selection of timeslot 16 for CLC extraction (for an E1 line).

Figure 4-25. Setting the CLC Extraction Timeslot for E1

12. For a T1 PCM line, select the time slot (TS) for Control signaling Link (CLC) extraction, as shown in Figure 4-26 on page 4-43, in accordance with the *Configuration Data* in the *Site Installation Documentation*.

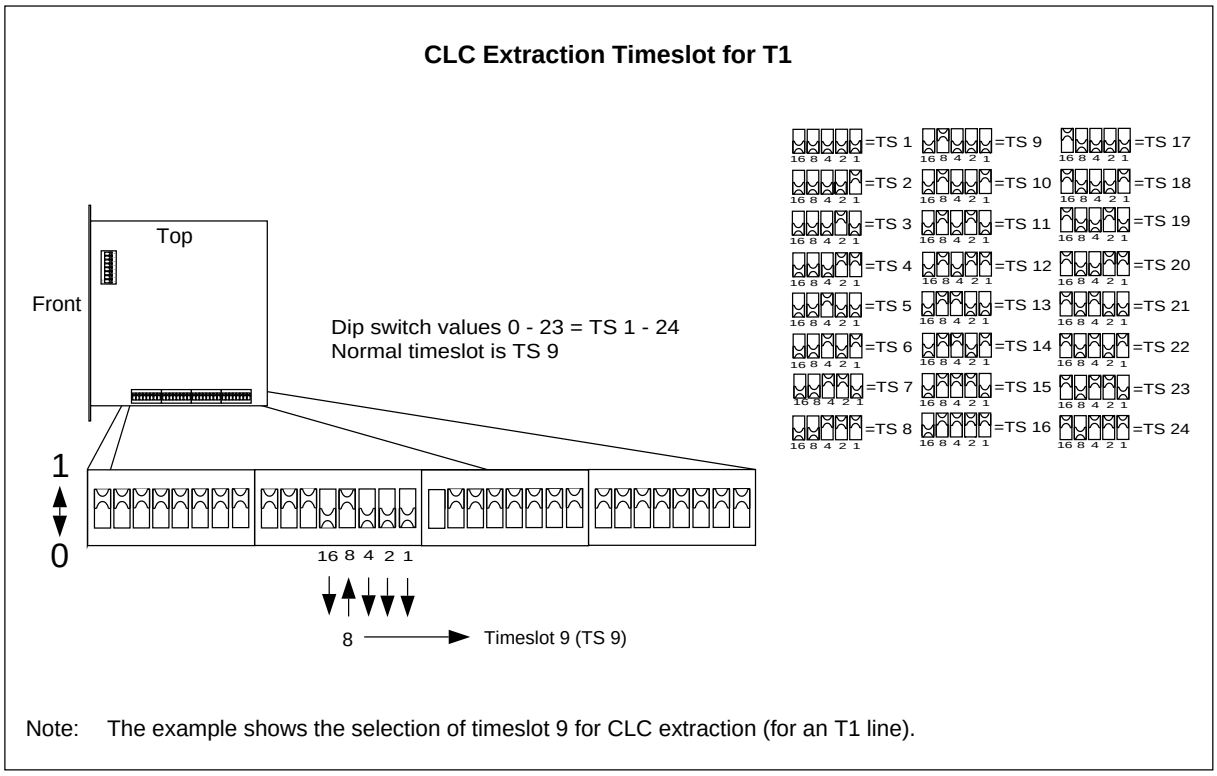

Figure 4-26. Setting the CLC Extraction Timeslot for T1

13. Set the jitter and wander limit for the PCM line for 138 Unit Intervals (UI), as shown in Figure 4-27 on page 4-43 in accordance with the *Configuration Data* in the *Site Installation Documentation*.

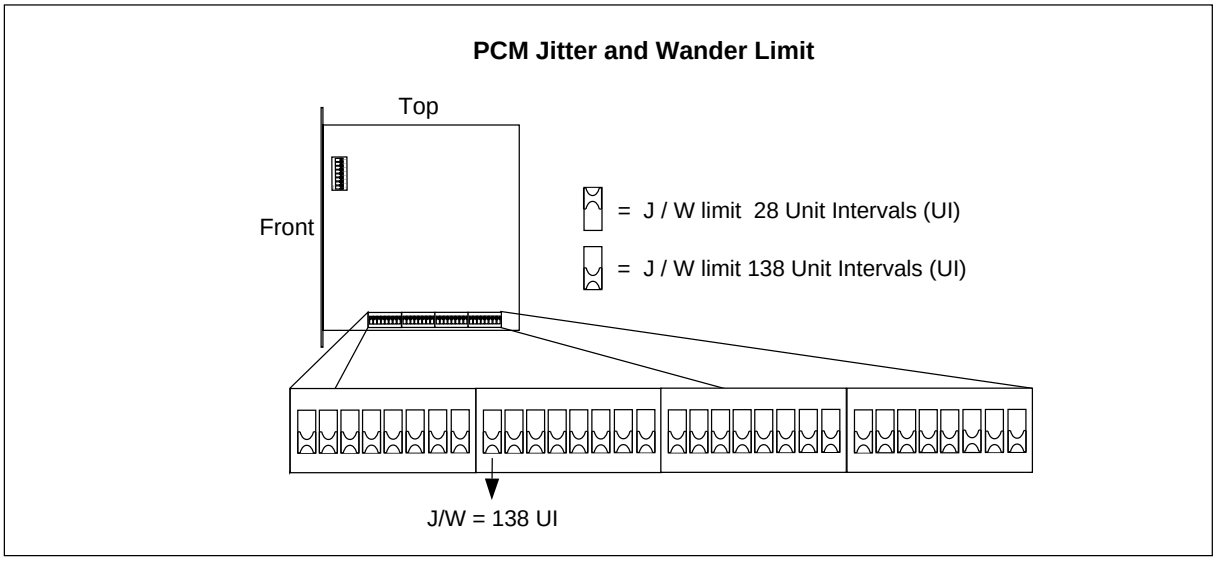

Figure 4-27. Setting the PCM Line Jitter and Wander Limit

14. Set the frequency of operation for 1900 MHz as shown in Figure 4-28 on page 4-44.

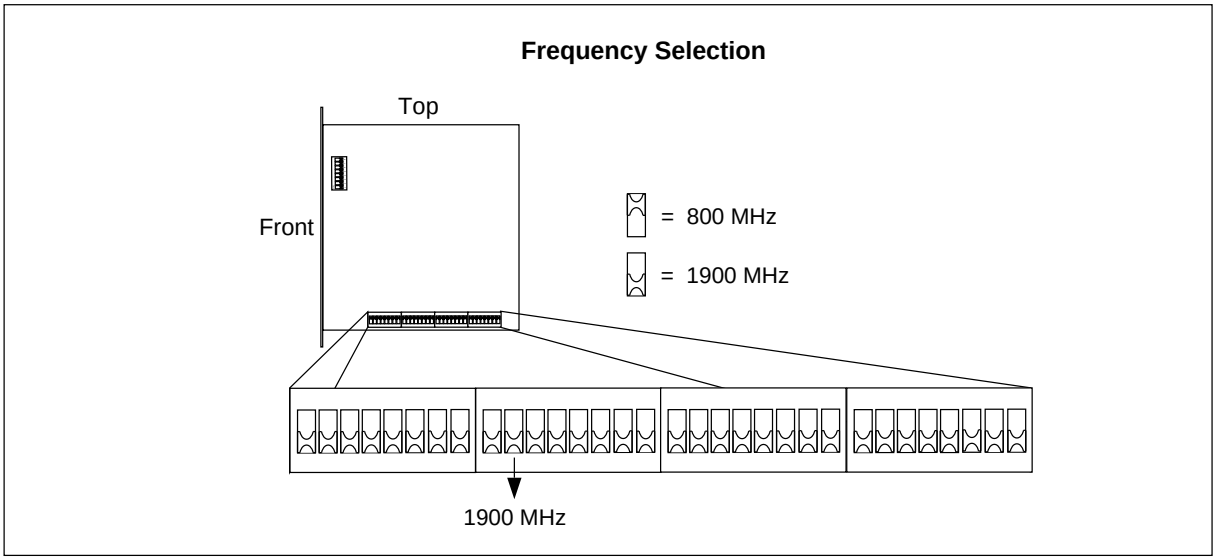

Figure 4-28. Setting the Frequency of Operation

15. Carefully slide the REMUX unit back into the cabinet following the guides, and push the unit firmly into the backplane connector.

16. Use the torque wrench with the Torx bit TX10 to tighten the top and bottom screws on the front.

    When turning the torque wrench until it slides, the screw is tightened with the torque 0.6 Nm.

10.3 EMRPM Switch Settings

1. Keep the ESD strap attached.

2. Use the torque wrench with the Torx bit TX10 to loosen the top and bottom screws on the front of one of the EMRPM units.

   Note: Do not touch any components or connector pins on a circuit board.

3. Remove the EMRPM unit from the cabinet using the extractor tool. Save the extractor hole plug and replace plug after installing the EMRPM unit.

4. Locate the dip switch and set the EMRPM address, as shown in the following figure, depending on which cabinet is being configured. Set the address as follows:

   - Main Cabinet, set the EMRPM unit address to 1.
   - Primary Cabinet 1, set the address to 3.
   - Primary Cabinet 2, set the address to 5.

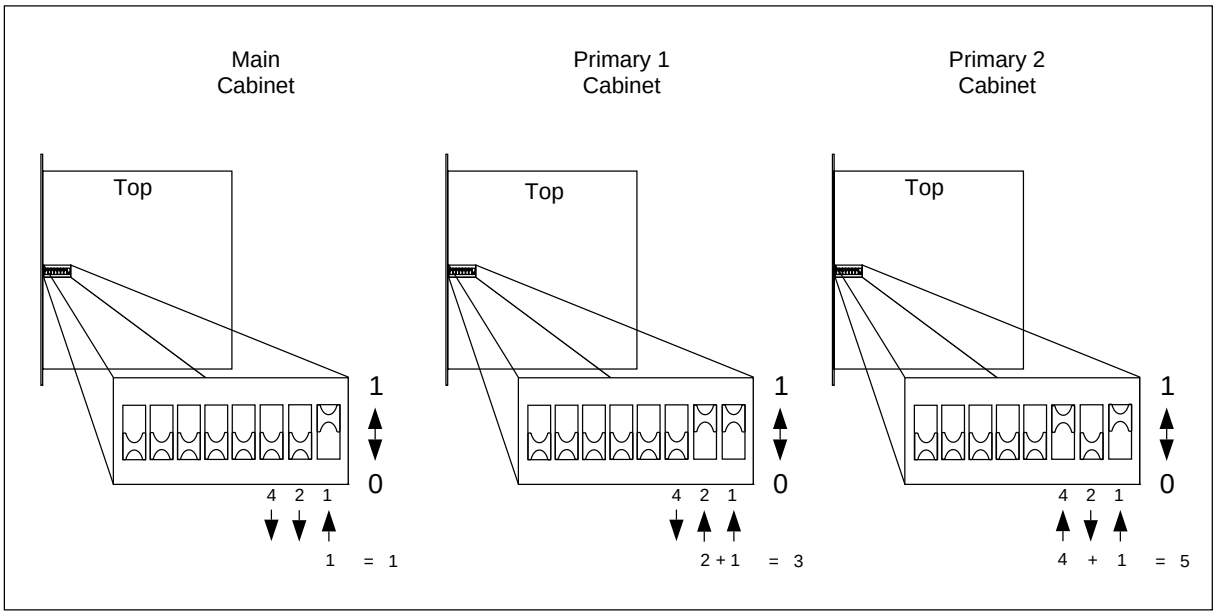

Figure 4-29. EMRPM Address Setting

5. Carefully slide the EMRPM unit back into the cabinet following the guides, and push the unit firmly into the backplane connector.

6. Use the torque wrench with the Torx bit TX10 to tighten the top and bottom screws on the front.

7. Repeat the same steps for the other EMRPM unit.

11 External Cable Installation

This section describes the procedure for installing external cables for the RBS 884 Micro (1900 MHz) cabinet.

Each cabinet arrives on site with internal cables pre-installed. These cables are described in the *Internal Cables* appendix. All other cables must be connected after the cabinets have been installed.

Information for optional cables and different site configurations is also described in Section 17 on page 4-64.

Note: Cable routing depends on the number of sectors, number of cabinets, and the number of antennas. Refer to the *System Description* for additional information on RBS 884 cabinet cabling. Also, the *Configuration Data* section in the *Site Installation Documentation* contains information about the actual site, cabinets, and antenna systems.

To simplify cable installation and troubleshooting, external cables are labeled with connection point information.

Intercabinet cables are labeled at each end. External cables are labeled at the cabinet end only.

An example of a label attached to an intercabinet cable is shown in Figure 4-30 on page 4-46.

Intercabinet cables are provided in cabling kits.

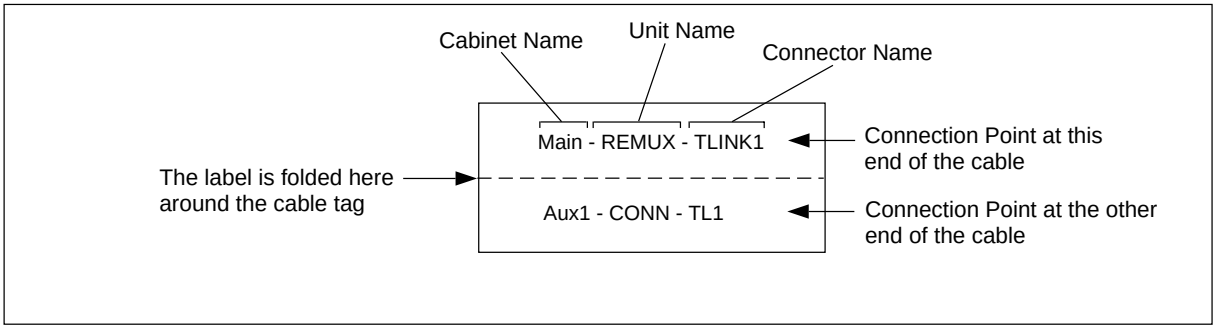

Figure 4-30. Example of an Intercabinet Cable Label

11.1 Required Materials and Tools

11.1.1 Materials

The cabling kits used with the cabinets are shown in Table 4-8 on page 4-46.

Table 4-8. External Cabinet Cables

Product Number	Description
NTM 201 1807	External Cabinet Cable Set
RPM 113 1443/2	ANP unit to TRX unit
TSR 952 144/3	ANP unit to Antenna I/O connector plate

Install the cables in the order they appear in the table enclosed with each cable kit.

Note: In the figures in this section, the cables are drawn as much as possible in the way they have to be routed in reality. For instance, the cables must not cover any TRX.

11.1.2 Tools

The Torque Wrench set LTT 601 82 including the Torque Wrench (for torque 0.6 Nm) with the SMA tool is all that is required.

Initially, hand-tighten all SMA connectors. Thereafter, fully tighten using the torque wrench with the SMA tool, as shown in Figure 4-31 on page 4-47.

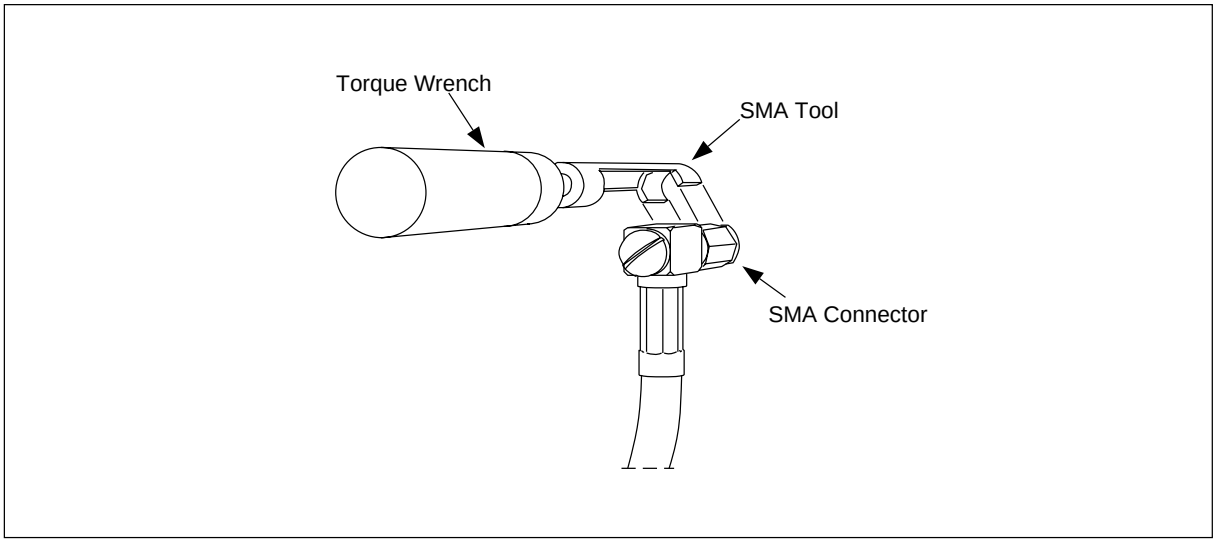

Figure 4-31. Using the Torque Wrench with the SMA Tool

Turn the torque wrench until it slides to tighten connector to 0.6 Nm.

11.2 Antenna Connections

See the *Cable Way Drawing* or the *Situating Plan* in the *Site Installation Documentation* on where the cables are located.

The jumper cables or the feeders are labelled with the connector name (for example ’ANT 1’). See the *Antenna Cable Distribution Diagram* in the *Site Installation Documentation* for more information about the connection to the cabinets.

11.3 ANP/RFTL Connections

11.3.1 Tools

The tools required for installation of ANP/RFTL units and cables are shown in the Table 4-9 on page 4-47, Figure 4-32 on page 4-48, Figure 4-33 on page 4-49, and Figure 4-34 on page 4-49.

Table 4-9. Tools for ANP/RFTL Unit and Cable Installation

Description	Product Number
ESD Wrist Strap and Cable	LYB 250 01/14
Unit Extractor Tool (Handle and Button)	LTD 117 02 and LTD 117 14

Table 4-9. Tools for ANP/RFTL Unit and Cable Installation (Continued)

Description	Product Number
Torque Wrench set including: - Torque Wrench for torque 0.6 Nm (to use with the SMA tool and the torx bit TX10 or TX8) - Torx bit TX10 or TX8 (for circuit board screws) - SMA tool (for the coaxial cables)	LTT 601 82

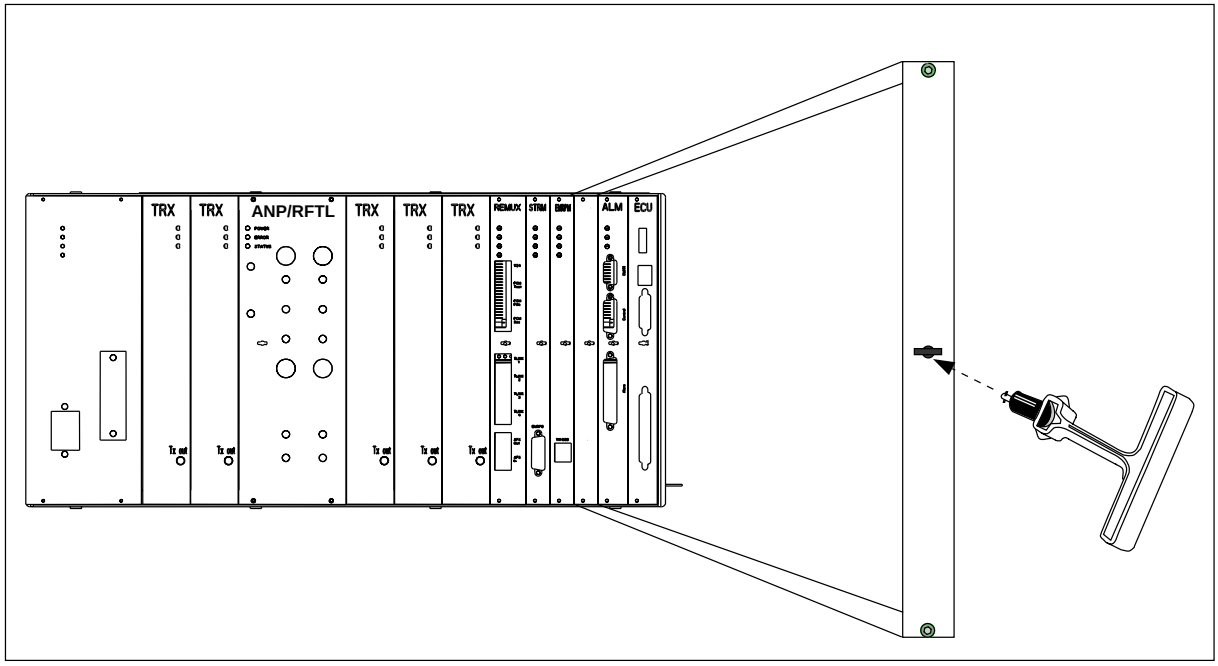

Figure 4-32. Unit Extractor Tool (extracting Blank Panel)

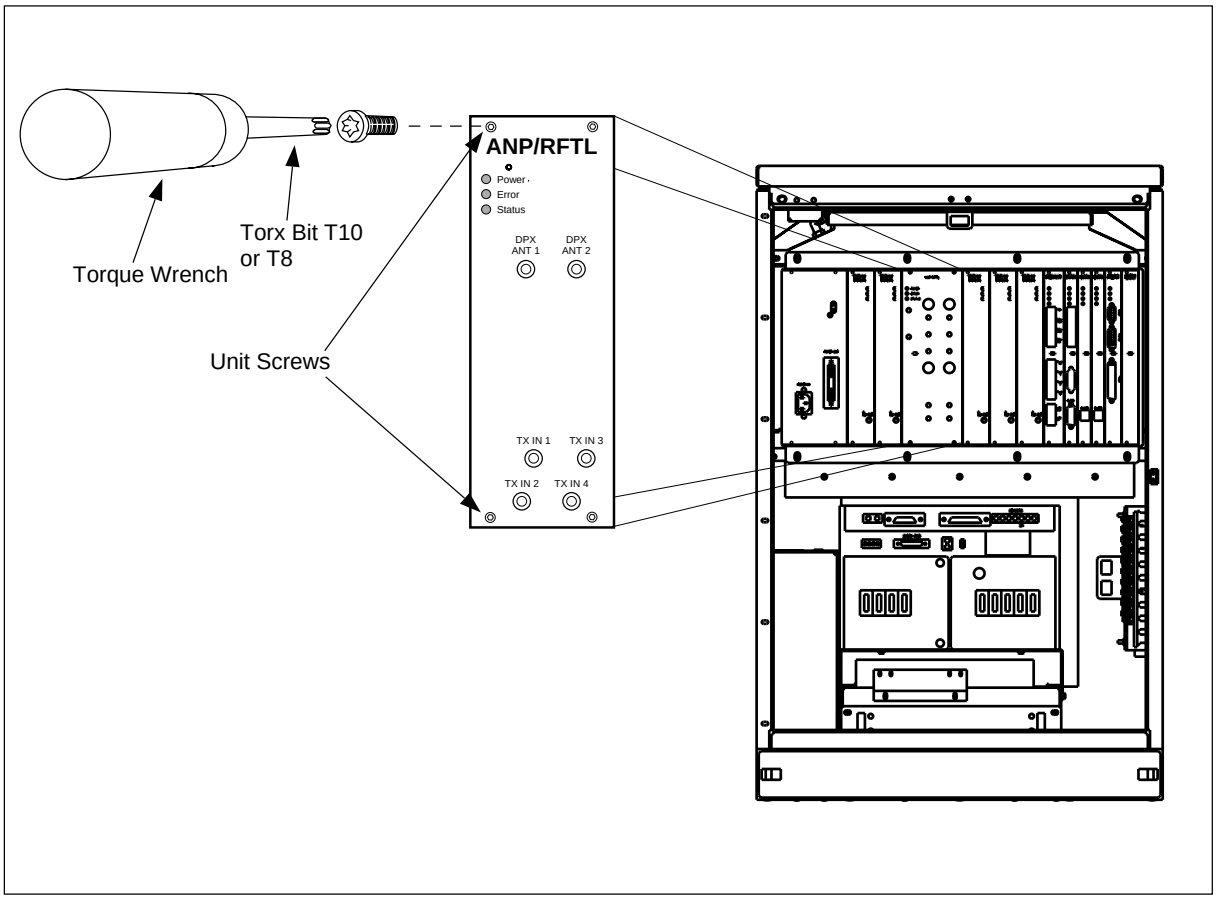

Figure 4-33. Torque Wrench with Torx TX8

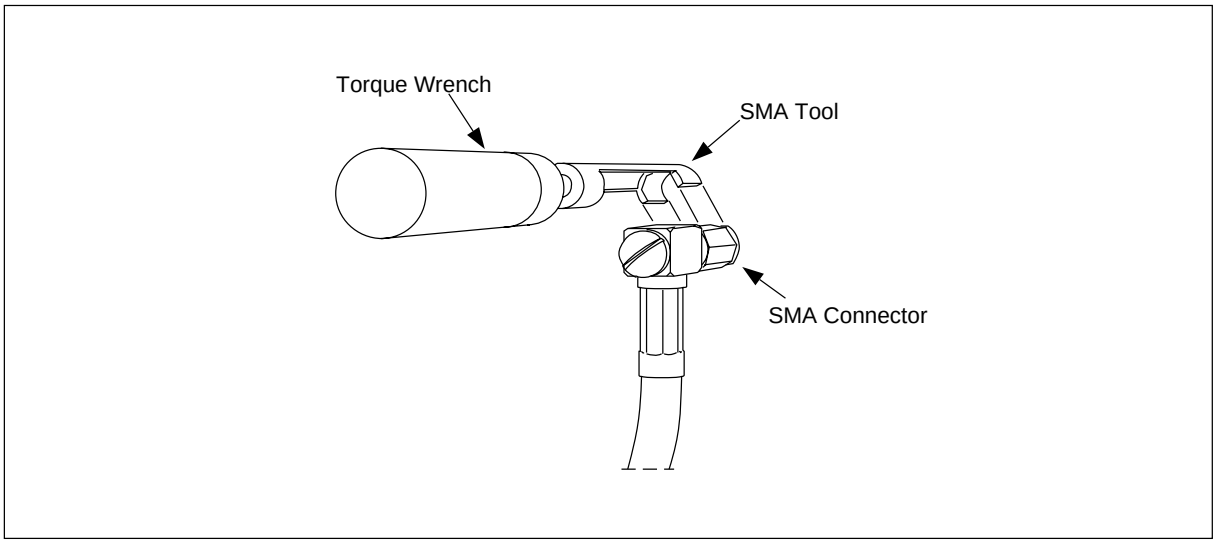

Figure 4-34. Torque Wrench with SMA Tool

11.3.2 Installation procedure

1. Attach the ESD strap to your wrist and connect the free end of the strap cable to an appropriate ground conductor in the cabinet.

   In Section 3 on page 4-5 there is more information about ESD.

2. Carefully slide the ANP/RFTL unit into the cabinet following the guides. Push the unit firmly into the backplane connector.

3. Use the torque wrench with the Torx bit TX10 to tighten the screws on the front.

   Turn the torque wrench until it slides to tighten screws to 0.6 Nm.

4. Check that the green power LED on the unit is on and the red error LED is off. If this is not the case, refer to the troubleshooting procedure in the *Maintenance* part for detection of units suspected to be faulty.

5. Connect the four ANP to TRX cables (RPM 113 1443/2) from the "TX Out" connector on the TRX unit to the appropriate TX IN connector on the ANP/RFTL unit. See Figure 4-35 on page 4-51 for the location of the connectors.

6. The ANP/RFTL unit has cable connections for two or four antennas depending on the type of unit installed. Figure 4-35 on page 4-51 illustrates two antennas and Figure 4-36 on page 4-52 illustrates four antennas. The cables are listed in Table 4-10 on page 4-52. The cable numbers for either a two-antenna or four-antenna configuration are the same. Install the antenna cables as follows:

   – Connect the first cable to the RX/TX ANT 1 connector on the front of the ANP/RFTL unit. Route the cable vertically down into the horizontal cable tray below the subrack. Route the cable to the right along the cable tray. Leaving the horizontal cable tray, route the cable vertically down the right inside cabinet wall into the vertical cable tray. From the vertical cable tray, route the cable to the I/O connector plate at the base of the cabinet. Connect the type N coaxial connector to the Antenna 1 connector and secure it by rotating the locking ring clockwise.

   – Connect the second cable to the RX/TX ANT 2 connector on the front of the ANP/RFTL unit. Route the cable the same as the antenna 1 cable and connect in to the Antenna 2 connector on the I/O plate.

   – If a four antenna ANP/RFTL unit is installed, route antennas three and four in the same way.

   When attaching the cable connector to the connector on the unit, hand-tighten as much as possible. Thereafter, fully tighten using the torque wrench with the SMA tool.

   Turn the torque wrench until it slides to tighten the connector to 0.6 Nm.

7. Report to the MSC.

The cabinets shown in the following figures are fully configured Main Cabinets. The cabling is the same for Primary Cabinets (a Primary Cabinet has a blank 12M and a CONN unit instead of the REMUX and the STRM units).

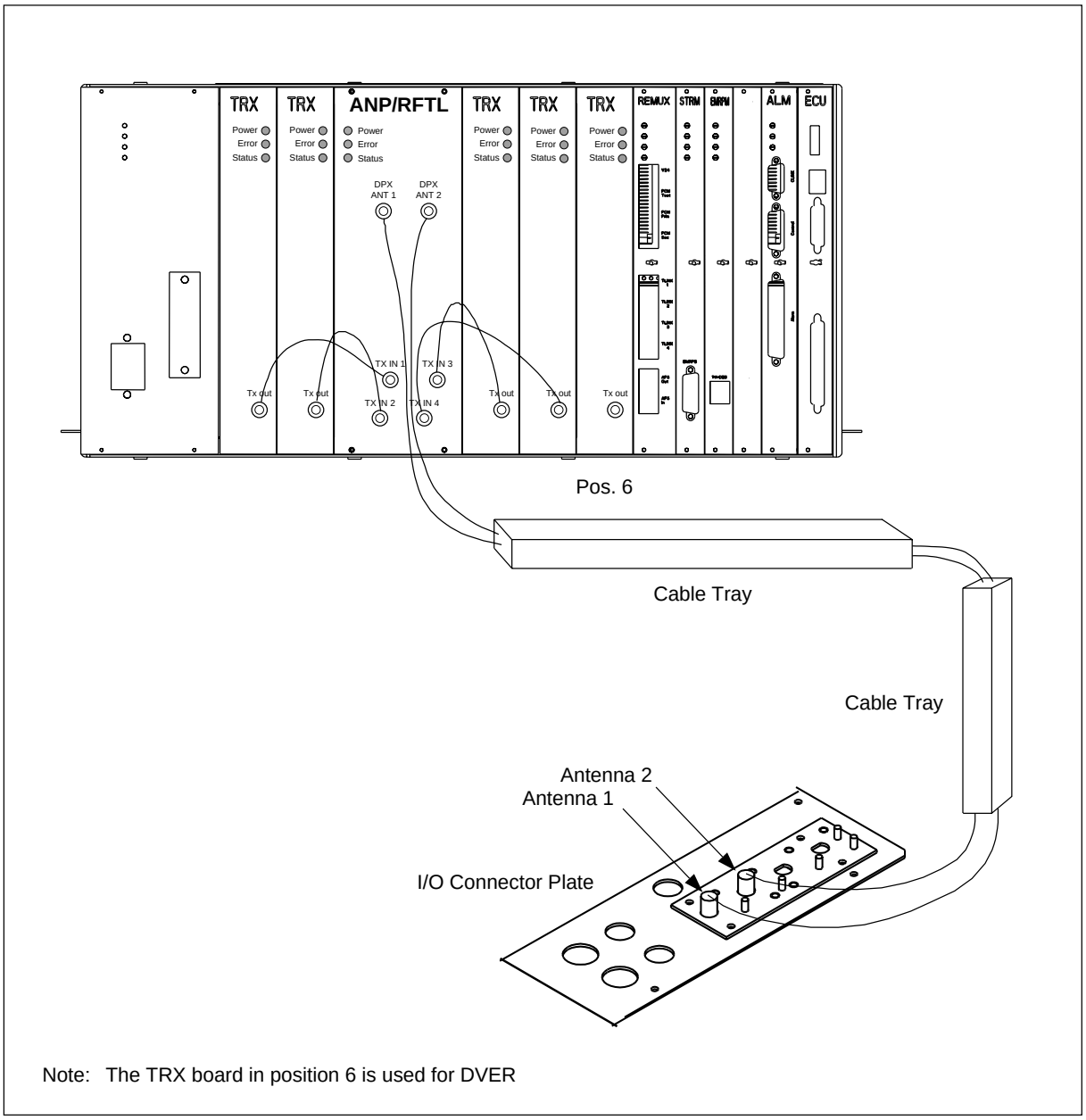

Figure 4-35. Antenna Cable Connections for a Cabinet Using Two Antennas

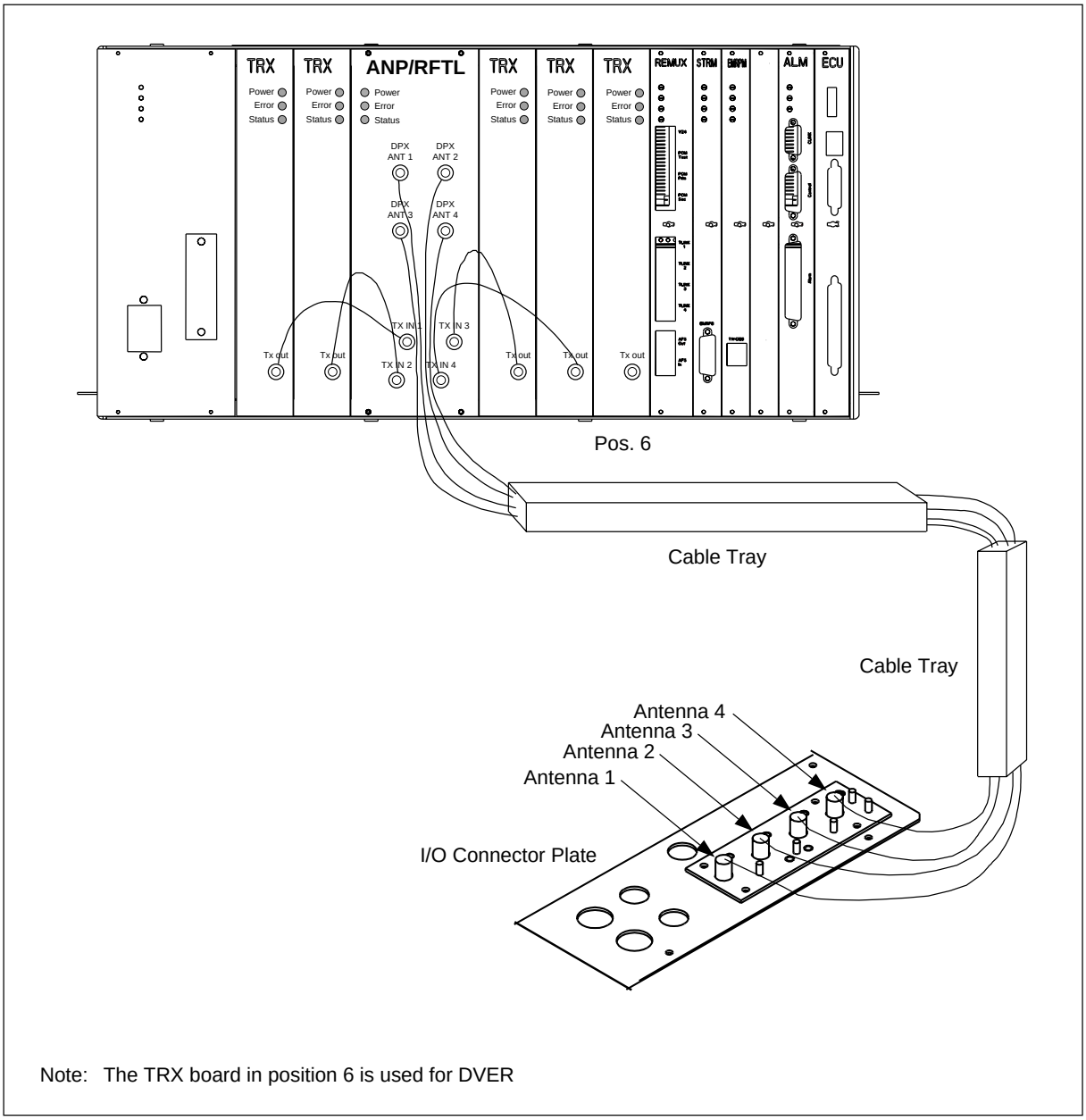

Note: The TRX board in position 6 is used for DVER

Figure 4-36. Antenna Cable Connections for a Cabinet Using Four Antennas

Table 4-10. Cables for Two and Four Antenna Configurations

Cable Number	Connector A	Connector B
RPM 113 1443/2	TRX Unit	ANP/RFTL Unit
TSR 952 144/3	ANP/RFTL Unit	Antenna I/O Plate

12 Site Inventory

To facilitate equipment replacement in the RBS cabinets, perform a site inventory to identify all units delivered, including revision states. This information is recorded in the *Plant Specification* found in the *Site Installation Documentation*.

12.1 Prerequisites

12.1.1 Prerequisites

Complete the following activities before the site inventory is performed:

- Cabinet mounting
- Grounding
- Setting of switches
- Cable installation

12.2 Site Inventory Procedure

Site Information

1. Record the name of the site, date, and other relevant information for each cabinet in the *Site Installation Documentation*, *Plant Specification*, or follow your local procedure.

RBS Cabinet Units

2. Locate the product labels on all of the units in the cabinets. Each unit has a product label stuck to its front panel, as shown in Figure 4-37 on page 4-53, indicating its product number and revision state.

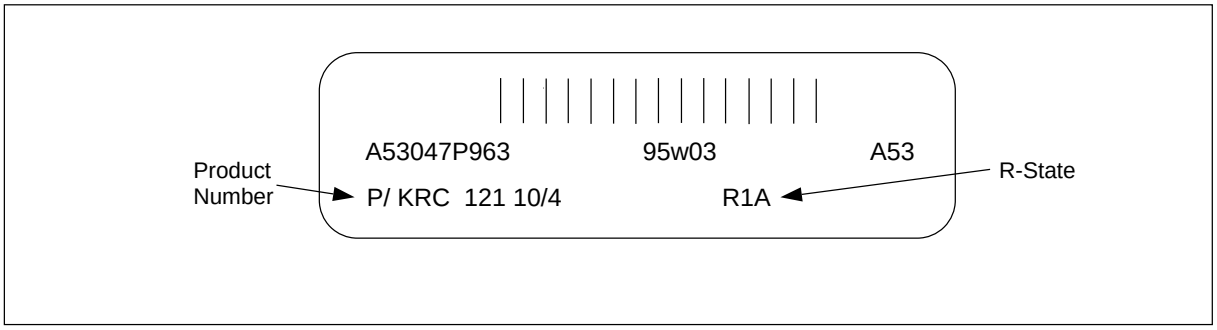

Figure 4-37. Unit Product Label

3. Record the product number, serial number, and R-state for each unit in each of the cabinets in the *Plant Specification* (or any other site inventory list). See Table 4-11 on page 4-54.

Table 4-11. RBS 884 Micro (1900 MHz) Units

Product Number	Unit
HRB 104 13	1900 Micro Radio Base Station
ROF 137 2775	ECU Unit
ROA 119 3157/7	ALM
ROF 367 211/1	REMUX - (T1) 24 Channel
ROF 367 211/3	REMUX - (E1) 32 Channel
ROF 367 212/1	CONN
ROF 367 207/1	STRM
ROF 367 210/1	EMRPM
KRC 121 106/1	TRX
KRF 102 115/1	ANP/RFTL (2) Two Antenna (A+D)
KRF 102 115/2	ANP/RFTL (4) Four Antenna (A+D)
KRF 102 115/3	ANP/RFTL (2) Two Antenna (D+B+E)
KRF 102 115/4	ANP/RFTL (4) Four Antenna (D+B+E)
KRF 102 115/5	ANP/RFTL (2) Two Antenna (E+F+C)
KRF 102 115/6	ANP/RFTL (4) Four Antenna (E+F+C)
ROF 367 213/1	Dummy EMRPM
ROF 367 216/1	Dummy REMUX
ROF 367 217	Dummy TRX
BKV 301 457	Fan

13 Equipment Power Up

This section describes the procedure for applying AC power to each of the RBS 884 Micro (1900 MHz) cabinets.

Note: Read the Safety Considerations (Section 2 on page 4-3) before starting the power up procedure.

13.1 Prerequisites and Test Equipment

13.1.1 Prerequisites

The following activities must be completed before power can be applied to the equipment cabinets:

- Installation of all cabinets
- Grounding of all cabinets
- Setting of switches in all cabinets
- Cabling of all cabinets
- AC voltage available on site, connected to the cabinets

13.1.2 Tools and Test Equipment

The following equipment is required for completing the electrical power installation and for power-up testing:

- Tools for connecting the AC power cable to a line power access point, if this is the local procedure
- Multimeter for checking supplied line voltage and polarity for DC power.

13.2 Power-Up Procedure

AC Power Connection

1. Verify the AC CONNECTED lamp on the front panel of the AC/DC box is ON.
2. Position the circuit breakers on the front panel of the AC/DC box to ON in the following sequence. See Figure 4-38 on page 4-56 for the location of the circuit breakers.
    - Main
    - PSU
    - ECU
    - FANS

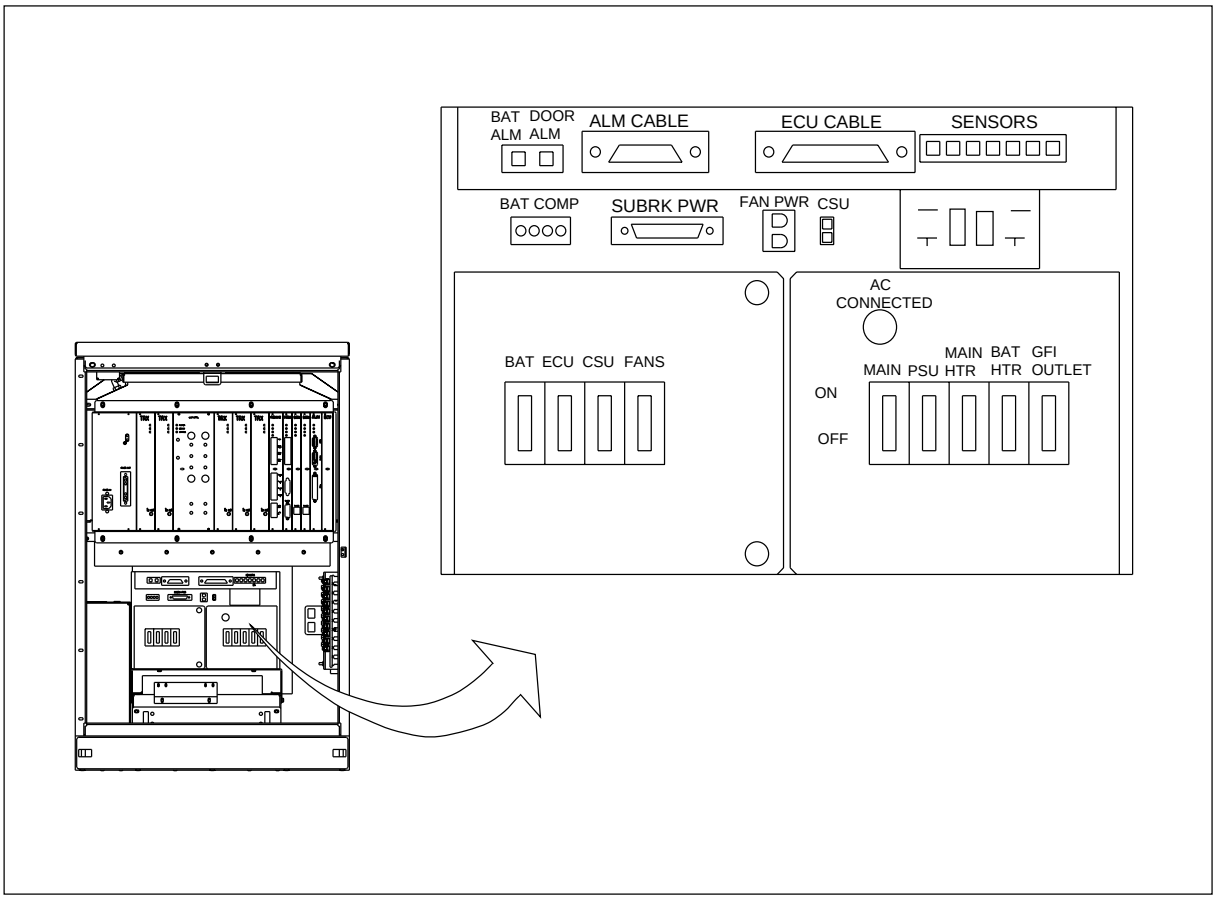

Figure 4-38. Cabinet Circuit Breakers

3. After the above circuit breakers are on, the fans will start up fast and drop back to a normal operating speed. Observe that for about 20 seconds after power-up, the red Error LEDs on all units in the subrack flash at 3 Hz as the units perform internal self-tests.

4. Position the remainder of the circuit breakers to ON as follows:

   - BAT
   - MAIN HTR
   - BAT HTR
   - CSU (if customer-supplied CSU equipment is installed)

   Note: Do not turn on the GFI OUTLET circuit breaker unless performing maintenance on the equipment.

Power-Up Test

5. After 20 seconds, verify that all fans at the top of the cabinet are running. If not, refer to the *troubleshooting* procedure for detection of units suspected to be faulty.

6. Check that the green Power Light Emitting Diode (LED) on each of the units in the cabinet is on (see Figure 4-39 on page 4-57).

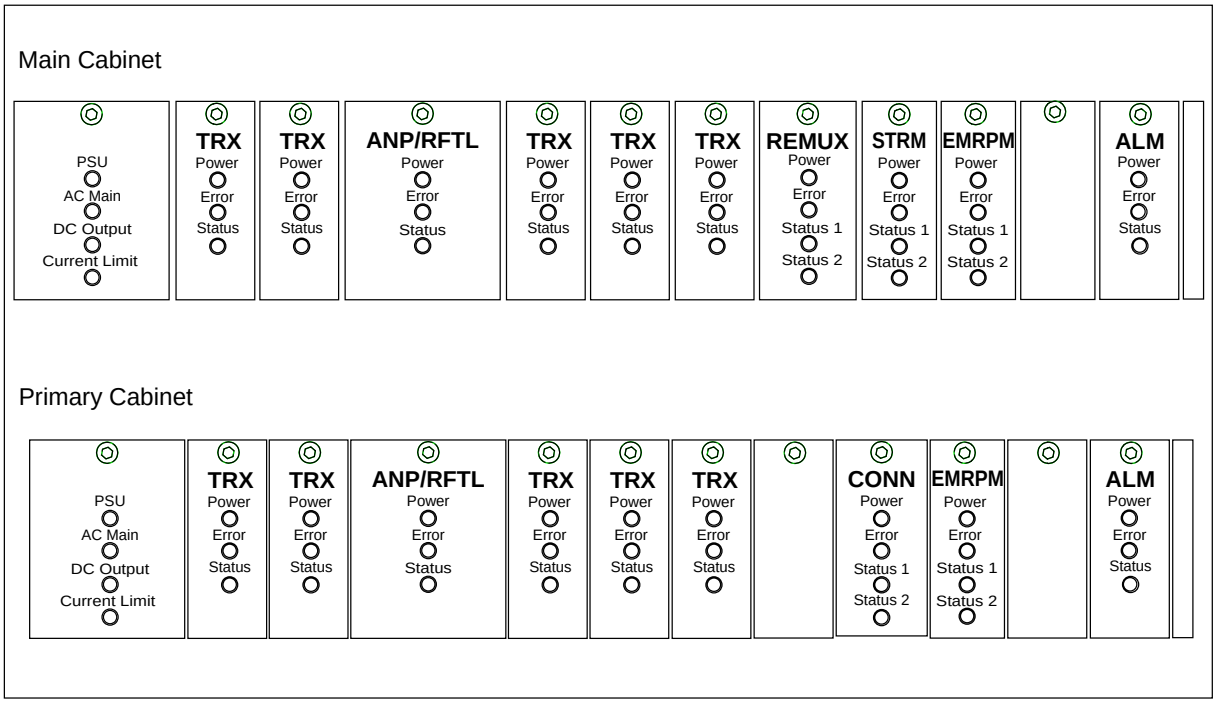

Figure 4-39. The Green Power LEDs and Red Error LEDs

7. If any of the green Power LEDs are off, replace the unit in accordance with the *Unit Replacement section* in the *Maintenance* part.

8. Check that none of the red Error LEDs is on (see Figure 4-39 on page 4-57).

9. If any of the red Error LEDs are on or flashing continuously, replace the unit in accordance with the *Unit Replacement section* in the *Maintenance* part.

10. Repeat Step 1 on page 4-55 to Step 9 on page 4-57 for each cabinet.

11. Report to the MSC to re-activate the system.

14 Cold Start-up

During an AC power-on event, the ECU checks the temperature of the equipment before allowing DC power to be distributed to the rest of the equipment. The ECU prohibits the equipment from operating when its temperature is outside the safe function limits (-5°C to +50°C). The cold-start mode is used when AC is first applied and the Subrack Thermal Mass temperature is below the subrack inlet temperature limit of 10°C.

If a cold start-up condition exists, heaters are activated to warm the cabinet temperature. The heater is controlled by a variable voltage from the ECU (5Vdc to 12Vdc) to provide 80 to 1600 watts of variable heat.

During the warm-up period, the fans operate at 20% of full flow circulating the heated air trough the cabinet. When the Subrack Thermal Mass reaches 10°C, the ECU applies power the Subrack Power Bus and the CSU.

The warm-up time from AC power-on until the equipment reaches operational temperature varies with the initial equipment temperature. At an initial equipment temperature of -35°C, the warm-up can take approximately 55 minutes.

The ECU does not generate any alarms to the MSC during a cold start-up.

15 Completing the Installation

This section describes the general housekeeping duties required to complete the installation.

15.1 Prerequisites and Tools

15.1.1 Prerequisites

The Installation Completion Procedure can be completed only after the equipment has been successfully powered up in accordance with Section 13 on page 4-54.

15.1.2 Tools

A tie-wrap tool is required to complete the Installation Completion Procedure.

15.2 Installation Completion Procedure

General housekeeping

1. Secure cables in cable trays or with tie-wraps.
2. Trim the ends of the tie-wraps to within 1/8” of the wrap.
3. Verify that all activators on the Primary T1/E1 Surge Protector are in the down position.

Recycle Packing Material

4. Recycle the packing materials in accordance with the local regulations.

16 LED Indications

Active devices are equipped with Light Emitting Diodes (LEDs) to indicate the status of the device.

In general:

- Green LEDs indicate the power is on.
- Red LEDs indicate an error has occurred (a red LED that is on, indicates that an unspecified error has occurred in that unit).
- Yellow LEDs show operational status.

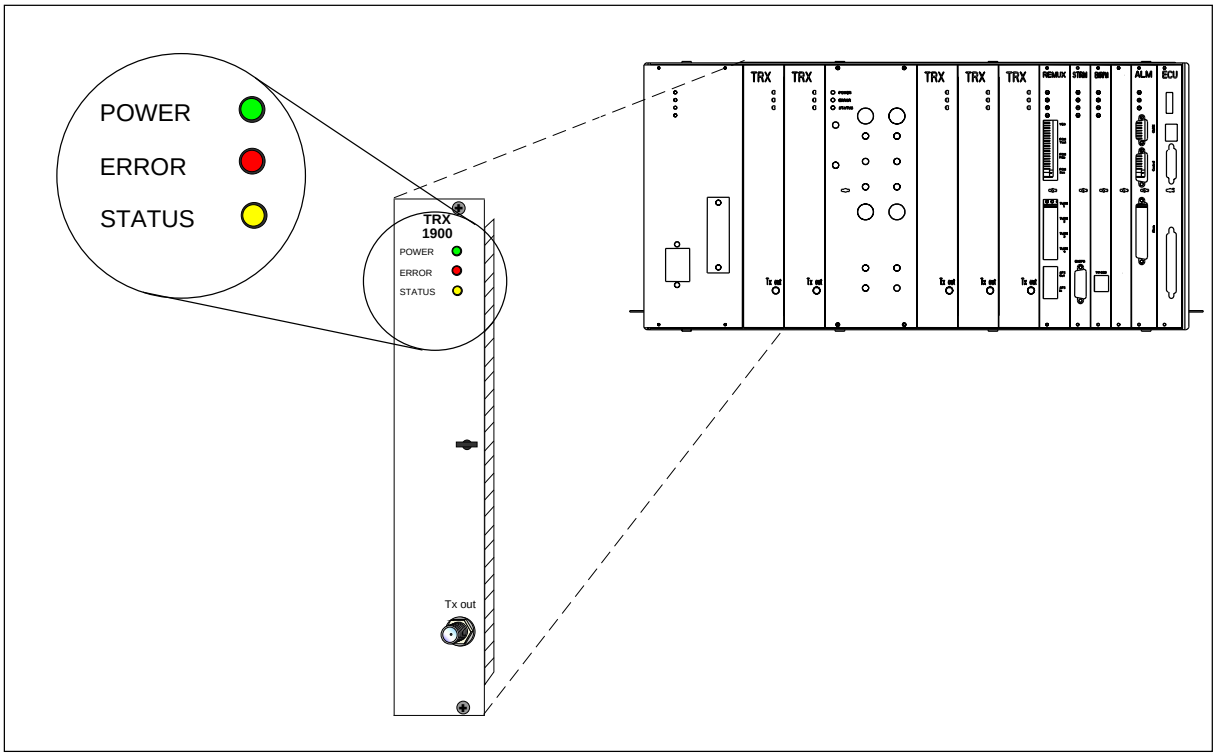

Figure 4-40. LED on a TRX

16.1 PSU LEDs

In the RBS 884 Micro (1900 MHz) PSU unit, four LED indicators are provided for the following:

- PSU
- AC Mains
- DC Output
- Current Limit

Note: During battery charging, the Current Limit LED will be on. This is a normal indication.

16.2 TRX LEDs

In the RBS 884 Micro (1900 MHz) TRX units, three LED indicators are provided for the following:

- Red Error LED
  - ON: Indicates an error or fault with the TRX
  - FLASH 3 Hz: Power-up test
  - FLASH: Communication with EMRPM is lost
- Yellow Status LED
  - OFF: No PCM signal present on the primary interface
  - FLASHING: Indicates TRX(s) are on (33% duty cycle =1 timeslot, 66% duty cycle=2 timeslot, 99% duty cycle=3 timeslot).
- Green Power LED
  - ON: Indicates the TRX is powered on
  -

16.3 REMUX LEDs

In the RBS 884 Micro 1900 REMUX unit, four LED indicators are provided for the following:

- Red Error LED
  - ON: Indicates an error or fault with the TRX
  - FLASH 3 Hz: Power-up test
  - FLASH: Communication with EMRPM/S is lost
- Yellow Status LEDs
  - OFF: No PCM signal present on the primary interface
  - FLASH 3 Hz: Primary PCM interface is not operable
  - FLASH 15 Hz:Primary PCM interface is operable
- Green Power LED
  - ON: Indicates the REMUX is powered on
  -

16.4 ANP (RFTL) LEDs

In the RBS 884 Micro (1900 MHz) ANP (RFTL) unit, three LED indicators are provided for the following:

- Red Error LED
  - ON: Indicates an error or fault with the ANP (RFTL)
  -
- Yellow Status LED
  - OFF: No PCM signal present on the primary interface
  -
- Green Power LED
  - ON: Indicates the ANP (RFTL) is powered
  -

16.5 STRM LEDs

In the RBS 884 Micro (1900 MHz) STRM unit, two LED indicators are provided for the following:

- Yellow Status LED
  - FLASHING 8 Hz: Blocked
  - FLASHING 1 Hz: Deblocked
  - FLASHING Two blinks-pause-two blinks: STC communication not working
- Green Power LED
  - ON: Indicates the STRM is powered on
  -

16.6 ALM LEDs

In the RBS 884 Micro (1900 MHz) ALM unit, three LED indicators are provided for the following:

- Red Error LED
  - ON: Indicates an error or fault with the TRX
  - FLASH 3 Hz: Power-up test
  - FLASH: Communication with EMRPM/S is lost
- Yellow Status LED
  - OFF: No PCM signal present on the primary interface
  -
- Green Power LED
  - ON: Indicates the TRX is powered on

16.7 EMRPM LEDs

In the RBS 884 Micro (1900 MHz) EMRPM unit, four LED indicators are provided for the following:

- Red Error LED
  - ON: Indicates an error or fault with the EMRPM
  -
- Yellow Status 1 LED
  - OFF: Turned off by APZ at EMRPM reset
  - ON: Turned on when EMRPM is started
  - FLASHING: Starts to blink when traffic is pending and is set to ON when there is no traffic
- Yellow Status 2 LED
  - OFF: Turned off by APZ at EMRPM reset Turned off at restart and when all devices are blocked
  - ON: Turned on when at least one device is deblocked but all individuals are blocked
  - FLASHING: When there are at least one deblocked individual
- Green Power LED
  - ON: Indicates the EMRPM is powered on

16.8 ECU LEDs

The ECU in the RBS 884 Micro (1900 MHz) provides interfaces to the following cabinet equipment:

- Main DC Power Bus Disconnect Relay
- Temperature Sensors
- PSU
- Main Heater
- ALM

Two seven-segment displays on the front of the ECU provide error codes to indicate equipment failure alarms and ALM status (see Table 4-12 on page 4-63).

Table 4-12. ECU Error Codes

Error Code	Description
A0	Temperature shutdown alarm
A1	Single fan alarm
A2	Multiple fan alarm

Table 4-12. ECU Error Codes (Continued)

A3	Main heater alarm
A4	PSU failure alarm
A5	Battery temperature alarm
F1	Fan #1 failure
F2	Fan #2 failure
F3	Fan #3 failure
F4	Fan #4 failure
FF	Fan test
S1	Ambient temperature Sensor failure
S2	Inlet temperature Sensor failure
S3	Subrack Temperature Sensor failure
S4	Exhaust Temperature Sensor failure
S5	Battery Compartment Temperature Sensor failure
S6	Inlet 2 (backup) Temperature Sensor failure
C0	Cold start
C1	Cold start timeout > 30 minutes

17 Site Expansion

A RBS 884 Micro (1900 MHz) can be expanded by adding the following:

- TRXs to one or more of the cabinets (Section 17.1 on page 4-65).
- One or two Primary Cabinets (Section 17.2 on page 4-69).

After completing the site expansion, fill in the Site Inventory list in the *Site Installation Documentation*: note the date and the R-state of the new units.

This section also provides additional cabling information for the following configurations:

- One-sector sites, one cabinet with two antennas
- One-sector sites, one cabinet with four antennas
- Two-sector sites, two cabinets with two antennas per cabinet
- Two-sector sites, two cabinets with four antennas per cabinet
- Three-sector sites, three cabinets with two antennas per cabinet
- Three-sector sites, three cabinets with four antennas per cabinet

17.1 Adding TRX Boards

Replacing the base station's RMUs with TRXs increases the call handling capacity in that particular sector.

Note: Other options for single sector site expansion are not supported by the RBS 884 Micro (1900 MHz).

17.1.1 Tools

The tools required for adding TRXs to a cabinet are shown in Table 4-13 on page 4-65, Figure 4-41 on page 4-65, Figure 4-42 on page 4-66, and Figure 4-43 on page 4-66.

Table 4-13. Tools for Adding TRXs

Description	Product Number
ESD Wrist Strap and Cable	LYB 250 01/14
Torque Wrench set including: - Torque Wrench for torque 0.6 Nm (to use with the SMA tool and the torx bit TX10 - Torx bit TX10 (for circuit board screws) - SMA tool (for the coaxial cables)	LTT 601 82
Unit Extractor Tool (Handle and Button)	LTD 117 02 and LTD 117 14

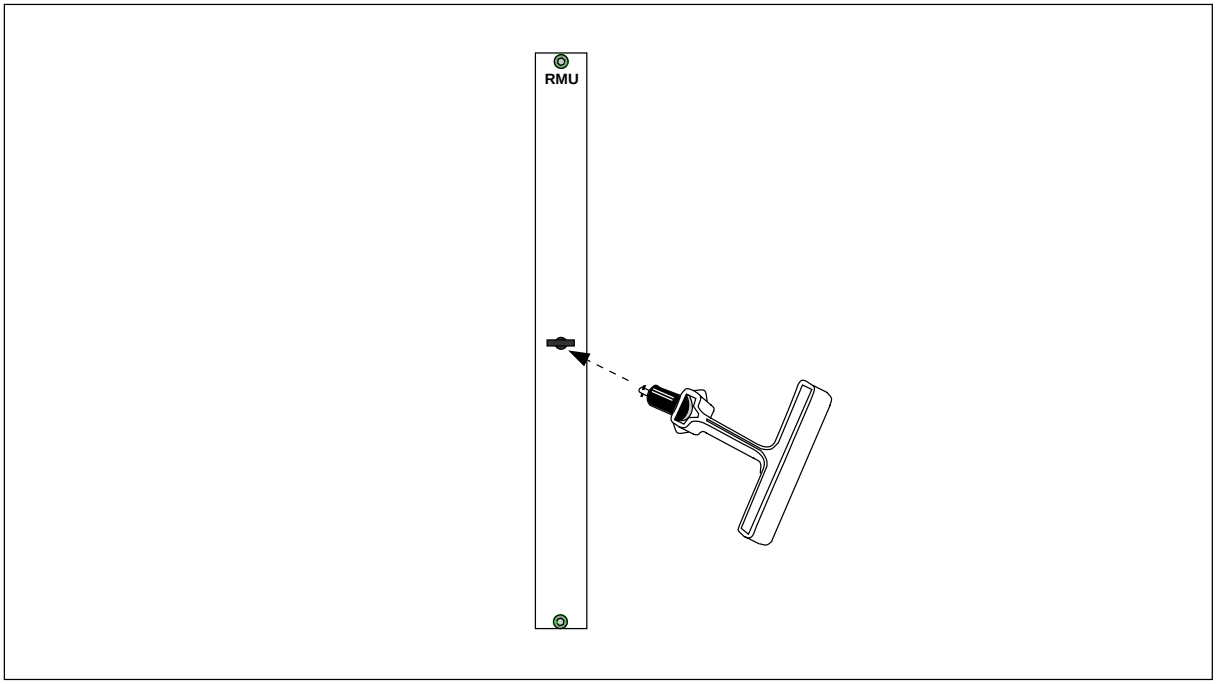

Figure 4-41. Unit Extractor Tool (extracting an RMU)

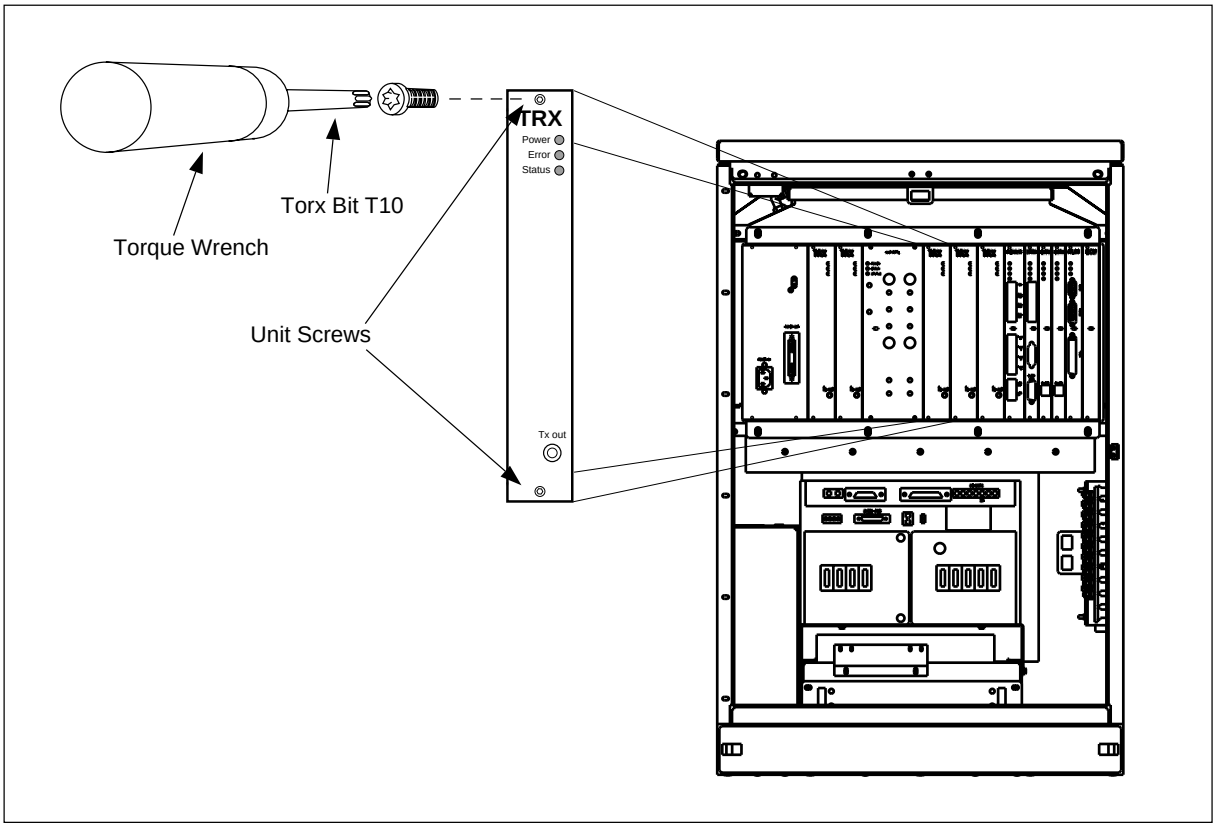

Figure 4-42. Torque Wrench with Torx TX10

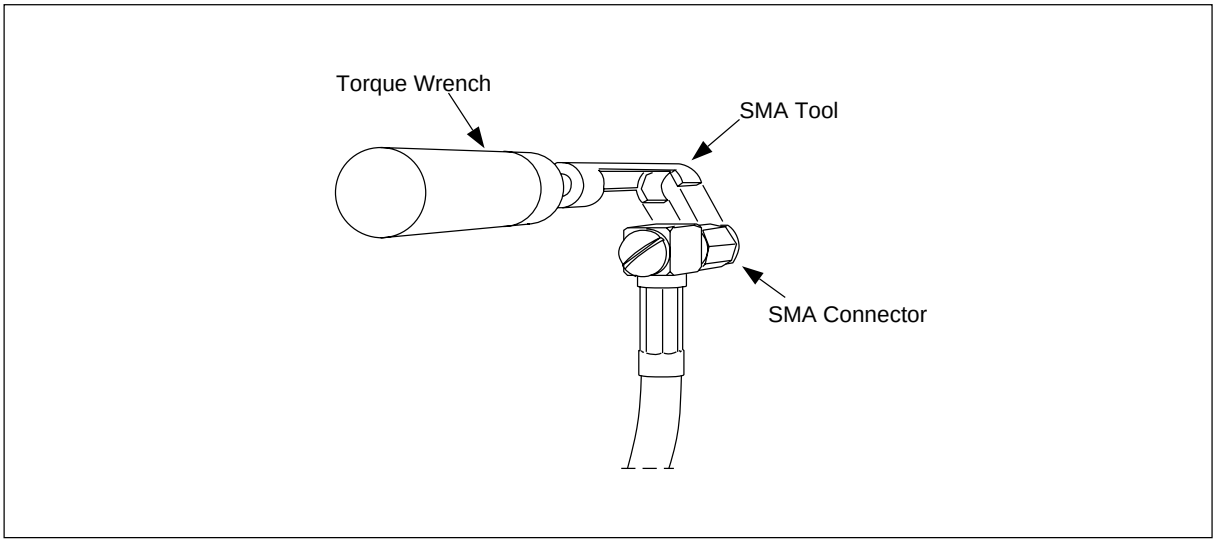

Figure 4-43. Torque Wrench with SMA Tool

17.1.2 TRX Positions

Refer to Figure 4-44 on page 4-67 for TRX positions. TRXs are added to the cabinet in the following positions.

- 3rd TRX in slot 4
- 4th TRX in slot 5

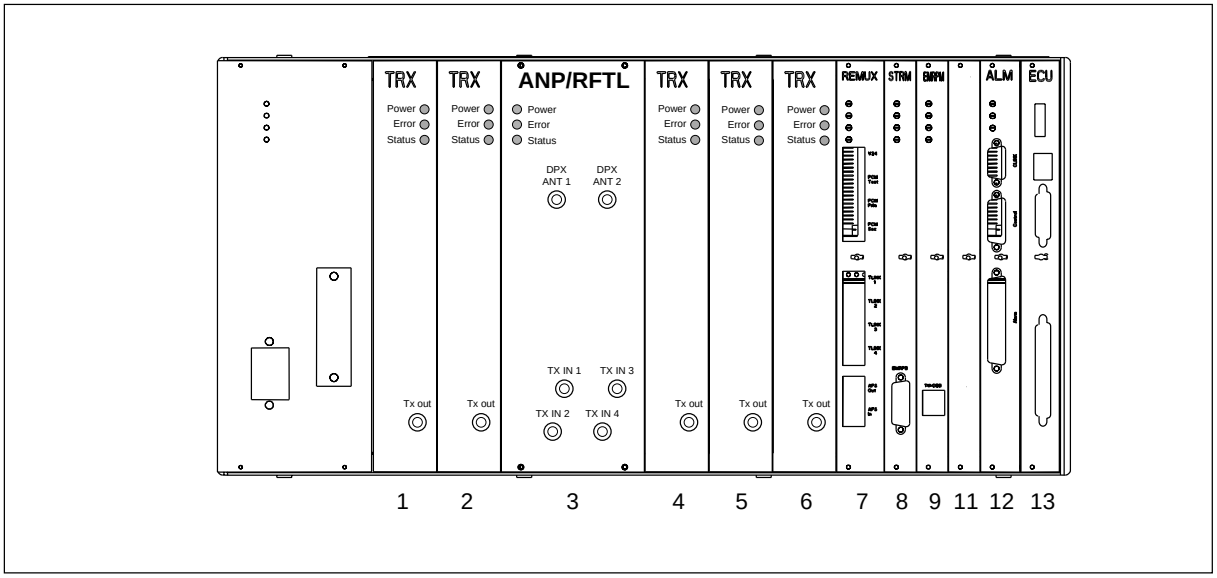

Figure 4-44. Unit Positions

17.1.3 Installation Procedure

1. Attach the ESD strap to your wrist and connect the free end of the strap cable to an appropriate ground conductor in the cabinet.

   In Section 3 on page 4-5 there is more information about ESD.

2. Remove the first RMU (dummy TRX).

   Use the torque wrench with the Torx bit TX10 to loosen the screws, and the unit extractor tool to pull the blank panel out.

3. Carefully slide the TRX into the cabinet following the guides. Push the it firmly into the backplane connector.

4. Use the torque wrench with the Torx bit TX10 to tighten the screws on the front.

   Turn the torque wrench until it slides to tighten screws to 0.6 Nm.

5. Check that the green power LED on the unit is on and the red error LED is off. If this is not the case, refer to the troubleshooting procedure in the *Maintenance* part for detection of units suspected to be faulty.

6. The cables are installed as shown in Figure 4-45 on page 4-69. Choose the appropriate figure (depending on the number of antennas connected to the cabinet).

   When attaching the cable connector to the connector on the unit, hand-tighten as much as possible. Thereafter, fully tighten using the torque wrench with the SMA tool.

   Turn the torque wrench until it slides to tighten connector to 0.6 Nm.

7. Follow the same procedure for all other TRXs to be installed.

8. Report to the MSC.

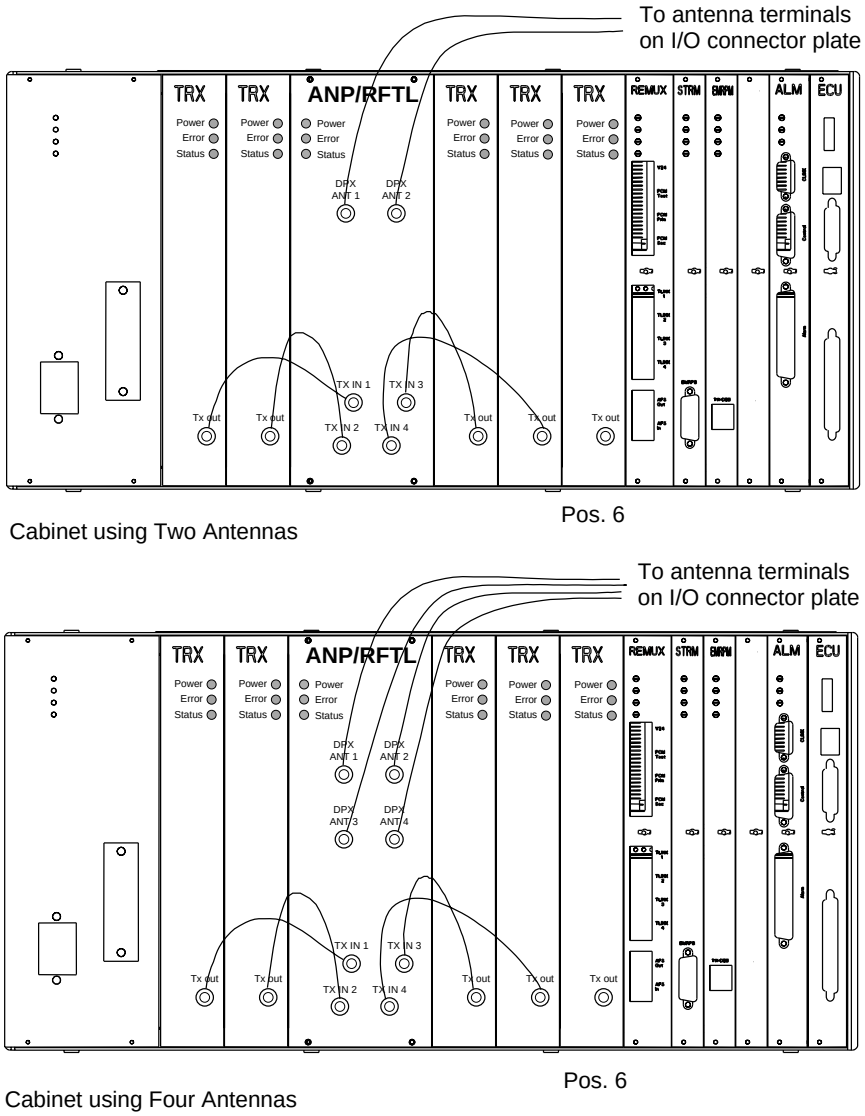

Note: The TRX board in position 6 is used for DVER
Cabinets illustrated are Main Cabinets, but the cabling is the same for Primary Cabinets.

Figure 4-45. TRX Cable Connections for Cabinets with Antennas

17.2 Adding Cabinets

A radio base station is expanded to a two-sector site by adding a Primary cabinet to the Main cabinet. The radio base station is expanded to a three-sector site by adding an additional Primary cabinet. Two or three cabinets that occupy the same site location and serve separate sectors are referred to

as collocated cabinets. Collocated cabinets are connected together with the following cables:

- EMRPM Bus (EMRPB). The EMRPB cables are daisy chained from the Main cabinet to the Primary 1 cabinet and then to the Primary 2 cabinet.
- TLINKS. Two TLINKS are run directly from the Main cabinet to each of the Primary cabinets.
- Air Frame Synchronization (AFS). The AFS cable is daisy chained from the Main cabinet to the Primary 1 cabinet and then to the Primary 2 cabinet.

These cables are run in liquid tight flexible conduit from the floor of one cabinet to the floor of the next cabinet. The Main and Primary cabinets have two 1 3/8 inch (33 mm) diameter knock-outs for 1 inch (25 mm) diameter conduit. Both cabinet cable entries are located on the bottom surface of the cabinet in the front right corner.

Note: All cables routed into and through the pedestal mounting base should be encased in liquid tight flexible conduit. Do not terminate the liquid tight flexible conduit at the pedestal base knock-outs.

A diagram of cable routing for collocated cabinets is shown in Figure 4-46 on page 4-71.

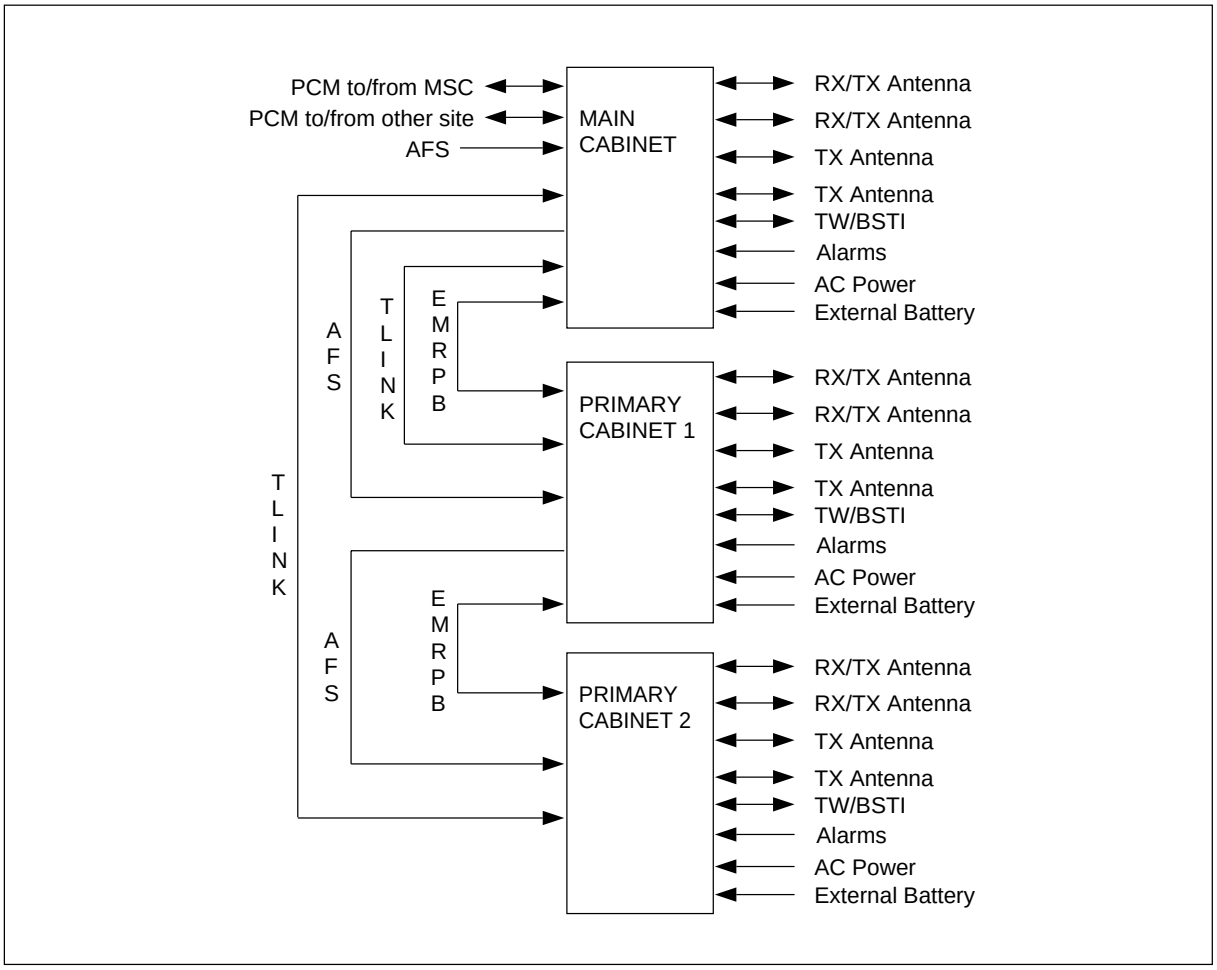

Figure 4-46. Cable Routing for Collocated Cabinets

Use the Extension Cable Set (NTM 201 1807) for each collocated cabinet.

The Extension Cable Set is customer assembled. The cable set contains the following:

- Cable (six meters)
- Two Insulation Displacement Connection (IDC) connectors
- Two IDC connector backshells
- Connector tool (for seating wires)
-

The EMRPB cable transfers control data between the STRM in the Main cabinet and the CONN in the Primary cabinet. Refer to Table 4-14 on page 4-72 for cable connector assembly:

Table 4-14. Extension Cable Connector Signals and Pin Connections

Connector A (Pin No.)	Signal	Connector B (Pin No.)
1	CLKM+ (Transmit clock from STRM)	1
2	DATAM+ (Transmit data from STRM)	2
3	DATAM+ (Transmit data from STRM)BLO+ (Blocking Signal from STRM)	3
4	BSB+ (Bus standby signal from STRM)	4
5	CLKS+ (Receive clock to STRM)	5
6	DATAS+ (Receive Data to STRM)	6
7	Not Connected	7
8	GND	8
9	CLKM- (Transmit clock from STRM)	9
10	DATAM- (Transmit data from STRM)	10
11	DATAM- (Transmit data from STRM)	11
12	BSB- (Bus standby signal from STRM)	12
13	CLKS- (Receive clock to STRM)	13
14	DATAS- (Receive Data to STRM)	14
15	Not Connected	15
NOTE: To ensure adequate shielding, clamp the cable braid and shield between backshell halves during assembly.		

17.3 One-Sector Sites

Before you begin the installation, attach the ESD strap to your wrist and connect the free end of the strap cable to an appropriate ground conductor in the cabinet.

The configurations with one cabinet have internal cables only. Figure 4-47 on page 4-73 and Figure 4-48 on page 4-73 are shown here only as information to the reader. The cabinets are shown as fully configured.

17.3.1 One-Sector Sites, One Cabinet, Two Antennas

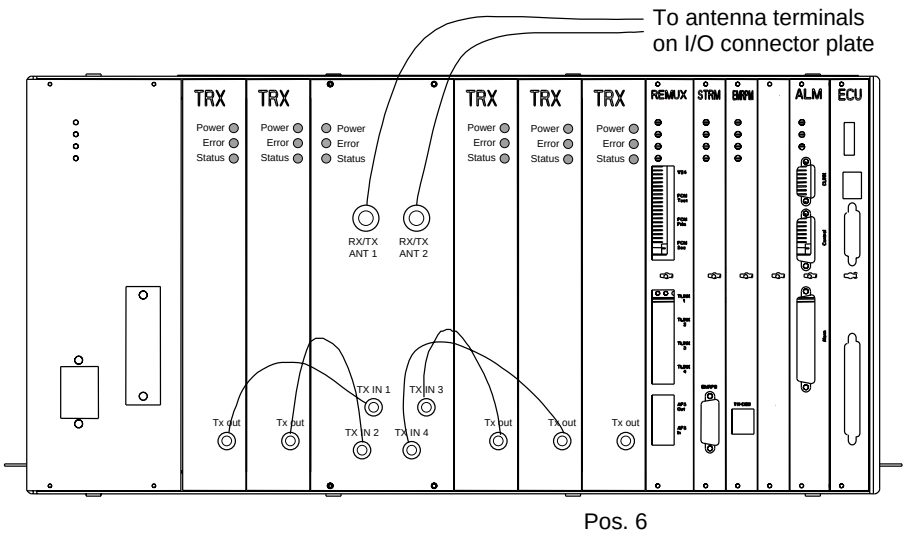

Note: The TRX board in position 6 is used for DVER

Figure 4-47. One-Sector Site, One Cabinet, Two Antennas

17.3.2 One-Sector Sites, One Cabinet, Four Antennas

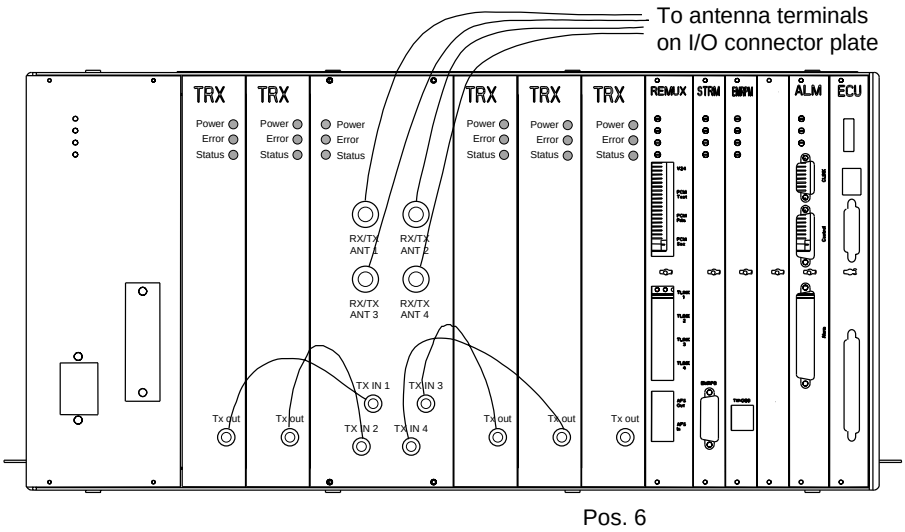

Note: The TRX board in position 6 is used for DVER

Figure 4-48. One-Sector Site, One Cabinet, Four Antennas

17.4 Two-Sector Sites

Before you begin the installation, attach the ESD strap to your wrist and connect the free end of the strap cable to an appropriate ground conductor in the cabinet.

Note: Cables are routed between cabinets using 1” liquid-tight flexible conduit. Conduit is run from the floor of the Main cabinet to the floor of the Primary cabinet.

Note: Prior to installing the external EMRP bus (EMRPB) cable, remove the backshell from the cable connector. Fold the connector inline with the cable. See Figure 4-49 on page 4-74. Wrap the connector with tape and pull through the conduit. After the cable is pulled into position, remove the tape and reassemble backshell.

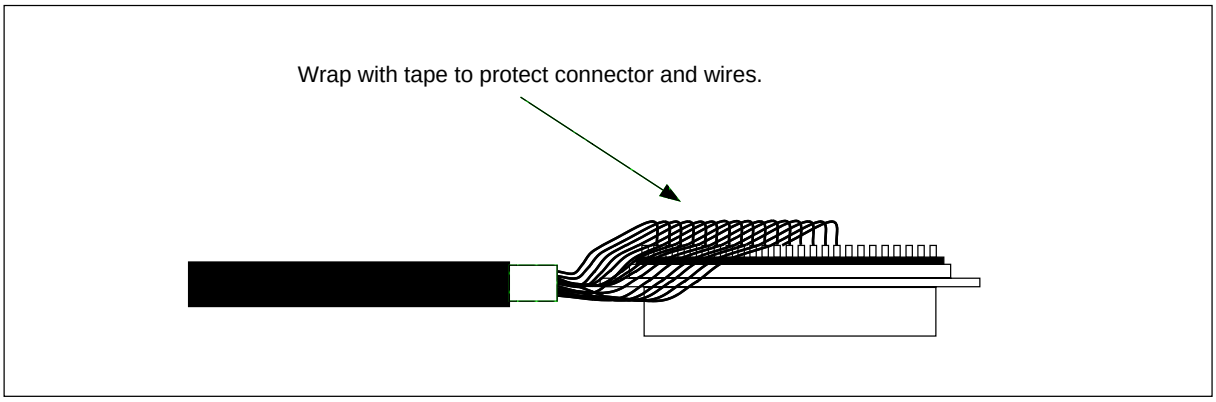

Figure 4-49. Cable Connector with Backshell Removed

17.4.1 Two-Sector Site, Two Cabinets, Two Antennas

Use the following steps to cable the Main and Primary cabinets in a two-sector site using two antennas. Use the cables in the Extension Cable Set (NTM 201 1807). See Figure 4-50 on page 4-75 for placement of cables.

1. Connect a cable from the AFS OUT connector on the REMUX board in the Main cabinet to the External AFS IN connector on the CONN board in the Primary cabinet.
2. Connect a cable from the TLINK 1 Interface connector on the REMUX board in the Main cabinet to the TLINK 1 Interface connector on the CONN board in the Primary cabinet.
3. Connect a cable from the EMRPB Interface connector on the STRM board in the Main cabinet to the top EMRPB connector on the CONN board in the Primary cabinet.
4. Insert a termination plug (RVN991200012) in the bottom EMRPB Interface connector on the CONN board.

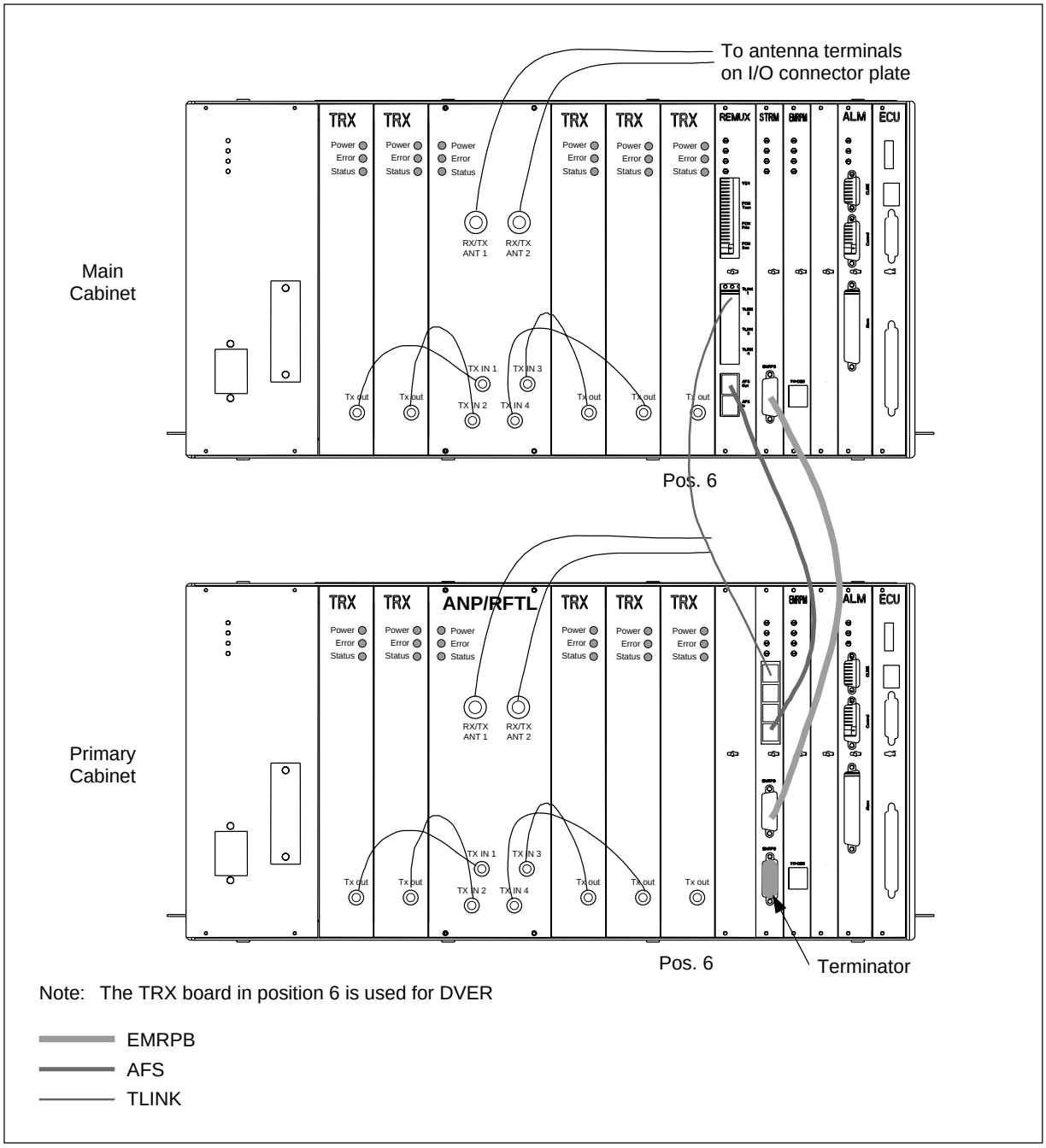

Figure 4-50. Two-Sector Site, Two Cabinets, Two Antennas

17.4.2 Two-Sector Site, Two Cabinets, Four Antennas

Use the following steps to cable the Main and Primary cabinets in a two-sector site using four antennas. Use the cables in the Extension Cable Set (NTM 201 1807). See Figure 4-51 on page 4-77 for placement of cables.

1. Connect a cable from the TLINK 1 Interface connector on the REMUX board in the Main cabinet to the TLINK 1 Interface connector on the CONN board in the Primary cabinet.
2. Connect a cable from the External AFS OUT connector on the REMUX board in the Main cabinet to the External AFS IN connector on the CONN board in the Primary cabinet.
3. Connect a cable from the EMRPB Interface connector on the STRM board in the Main cabinet to the top EMRPB connector on the CONN board in the Primary cabinet.
4. Insert a termination plug (RVN991200012) in the bottom EMRPB Interface connector on the CONN board.

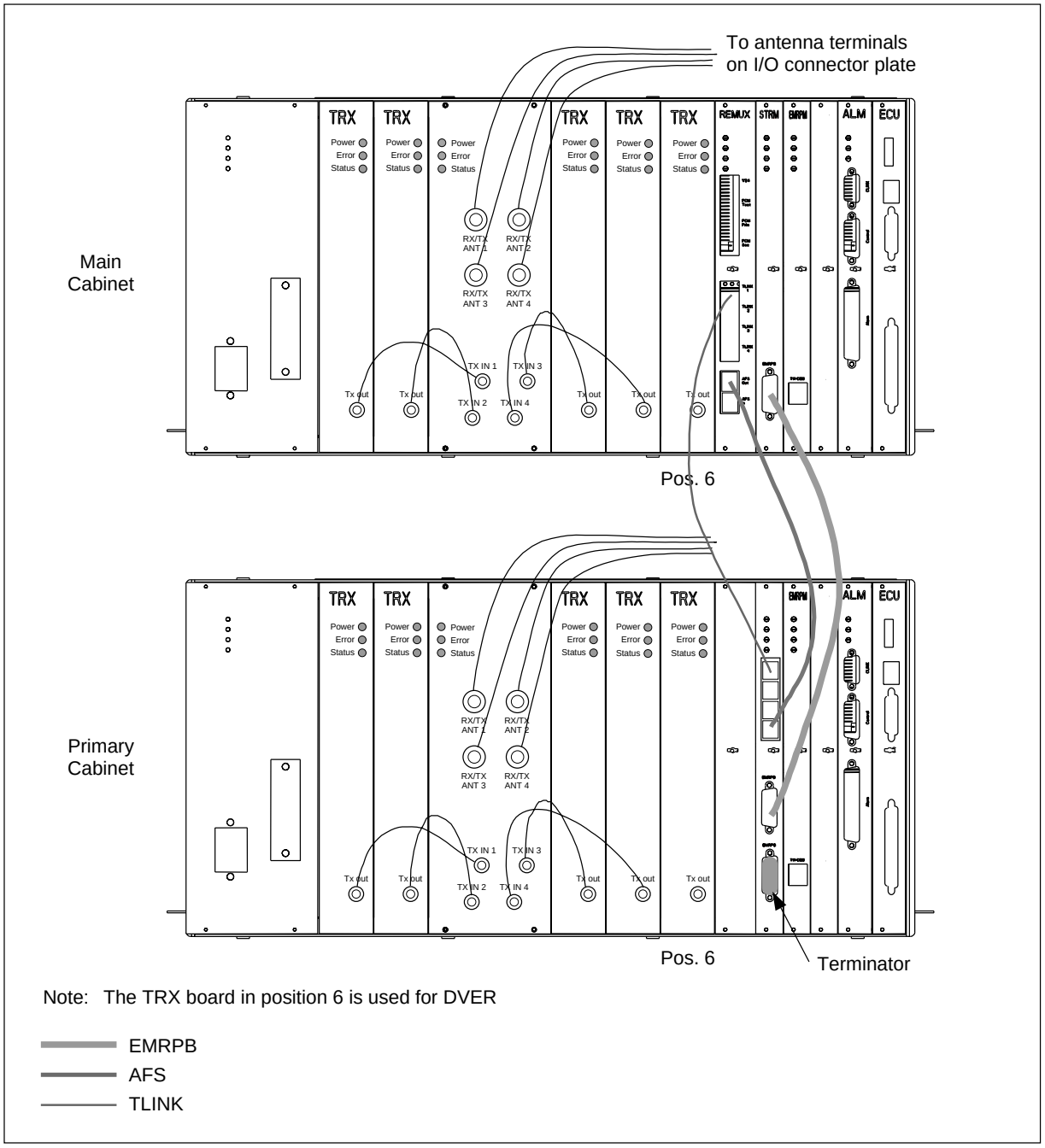

Figure 4-51. Two-Sector Site, Two Cabinets, Four Antennas

17.5 Three Sector Sites

Before you begin the installation, attach the ESD strap to your wrist and connect the free end of the strap cable to an appropriate ground conductor in the cabinet.

Note: Cables are routed between cabinets using 1” liquid-tight flexible conduit. Conduit is run from the floor of the Main cabinet to the floor of the Primary cabinets.

Note: Prior to installing the external EMRPMB cable, remove the backshell from the cable connector. Fold the connector inline with the cable. See Figure 4-49 on page 4-741. Wrap the connector with tape and pull through the conduit. After the cable is pulled into position, remove the tape and reassemble backshell.

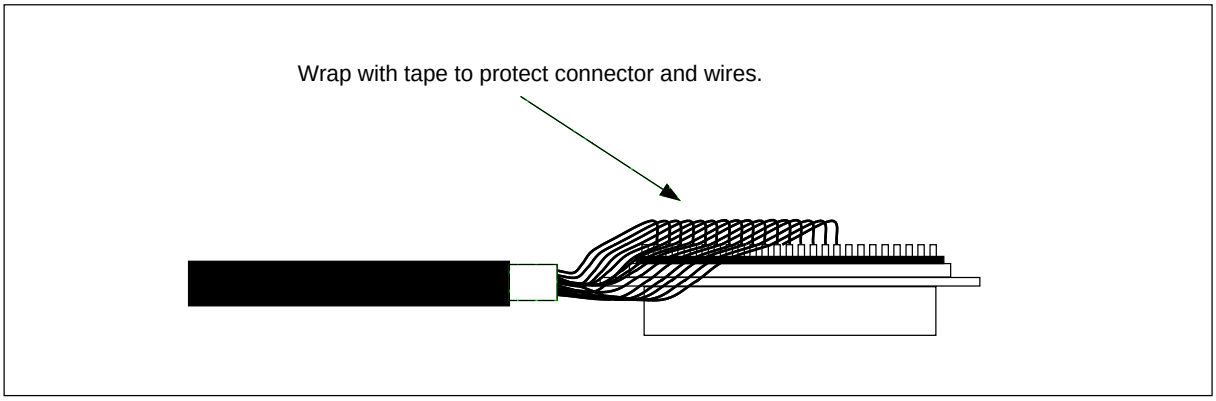

Figure 4-52. Cable Connector with Backshell Removed

17.5.1 Three-Sector Site, each Cabinet has Two Antennas

Use the following steps to cable the Main, Primary 1, and Primary 2 cabinets in a three-sector site using two antennas. Use the cables in the Extension Cable Set (NTM 201 1807). See Figure 4-53 on page 4-80 for placement of cables.

1. Connect a cable from the TLINK 1 Interface connector on the REMUX board in the Main cabinet to the TLINK 1 Interface connector on the CONN board in the Primary 1 cabinet.
2. Connect a cable from the TLINK 2 Interface connector on the REMUX board in the Main cabinet to the TLINK 1 Interface connector on the CONN board in the Primary 2 cabinet.
3. Connect a cable from the External AFS OUT connector on the REMUX board in the Main cabinet to the External AFS IN connector on the CONN board in the Primary 1 cabinet.
4. Connect a cable from the External AFS OUT connector on the CONN board in the Primary 1 cabinet to the External AFS IN connector on the CONN board in the Primary 2 cabinet.
5. Connect a cable from the EMRPB Interface connector on the STRM board in the Main cabinet to the top EMRPB connector on the CONN board in the Primary 1 cabinet.

6. Connect a cable from the bottom EMRPB Interface connector on the CONN board in the Primary 1 cabinet to the top EMRPB connector on the CONN board in the Primary 2 cabinet.
7. Insert a termination plug (RVN991200012) in the bottom EMRPB Interface connector on the CONN board in the Primary 2 cabinet.

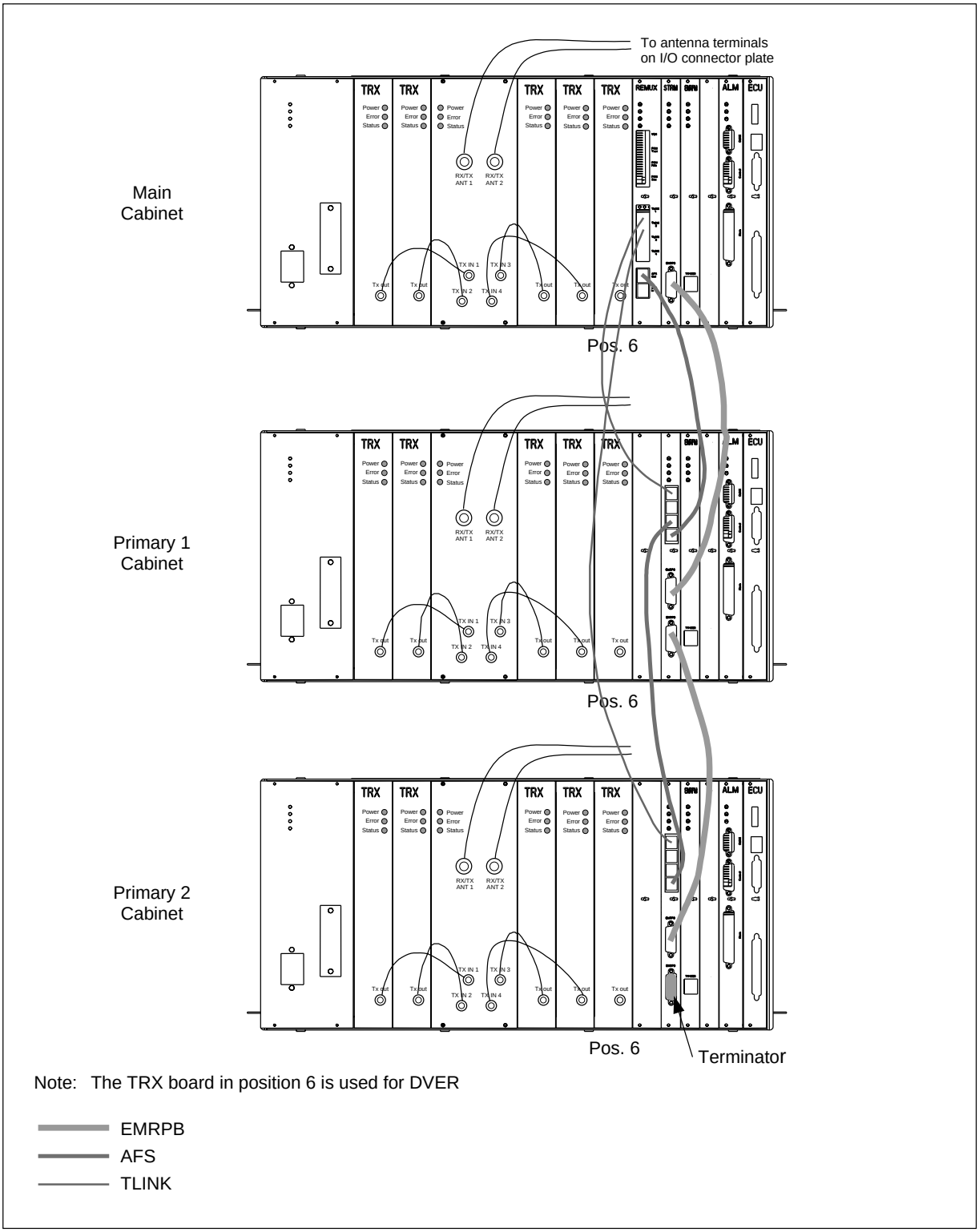

Figure 4-53. Three-Sector Site, each Cabinet has Two Antennas

17.5.2 Three-Sector Site, each Cabinet has Four Antennas

Use the following steps to cable the Main, Primary 1, and Primary 2 cabinets in a three-sector site using four antennas. Use the cables in the Extension Cable Set (NTM 201 1807). See Figure 4-54 on page 4-82 for placement of cables.

1. Connect a cable from the TLINK 1 Interface connector on the REMUX board in the Main cabinet to the TLINK 1 Interface connector on the CONN board in the Primary 1 cabinet.
2. Connect a cable from the TLINK 2 Interface connector on the REMUX board in the Main cabinet to the TLINK 1 Interface connector on the CONN board in the Primary 2 cabinet.
3. Connect a cable from the External AFS OUT connector on the REMUX board in the Main cabinet to the External AFS IN connector on the CONN board in the Primary 1 cabinet.
4. Connect a cable from the External AFS OUT connector on the CONN board in the Primary 1 cabinet to the External AFS IN connector on the CONN board in the Primary 2 cabinet.
5. Connect a cable from the EMRPB Interface connector on the STRM board in the Main cabinet to the top EMRPB connector on the CONN board in the Primary 1 cabinet.
6. Connect a cable from the bottom EMRPB Interface connector on the CONN board in the Primary 1 cabinet to the top EMRPB connector on the CONN board in the Primary 2 cabinet.
7. Insert a termination plug (RVN991200012) in the bottom EMRPB Interface connector on the CONN board in the Primary 2 cabinet.

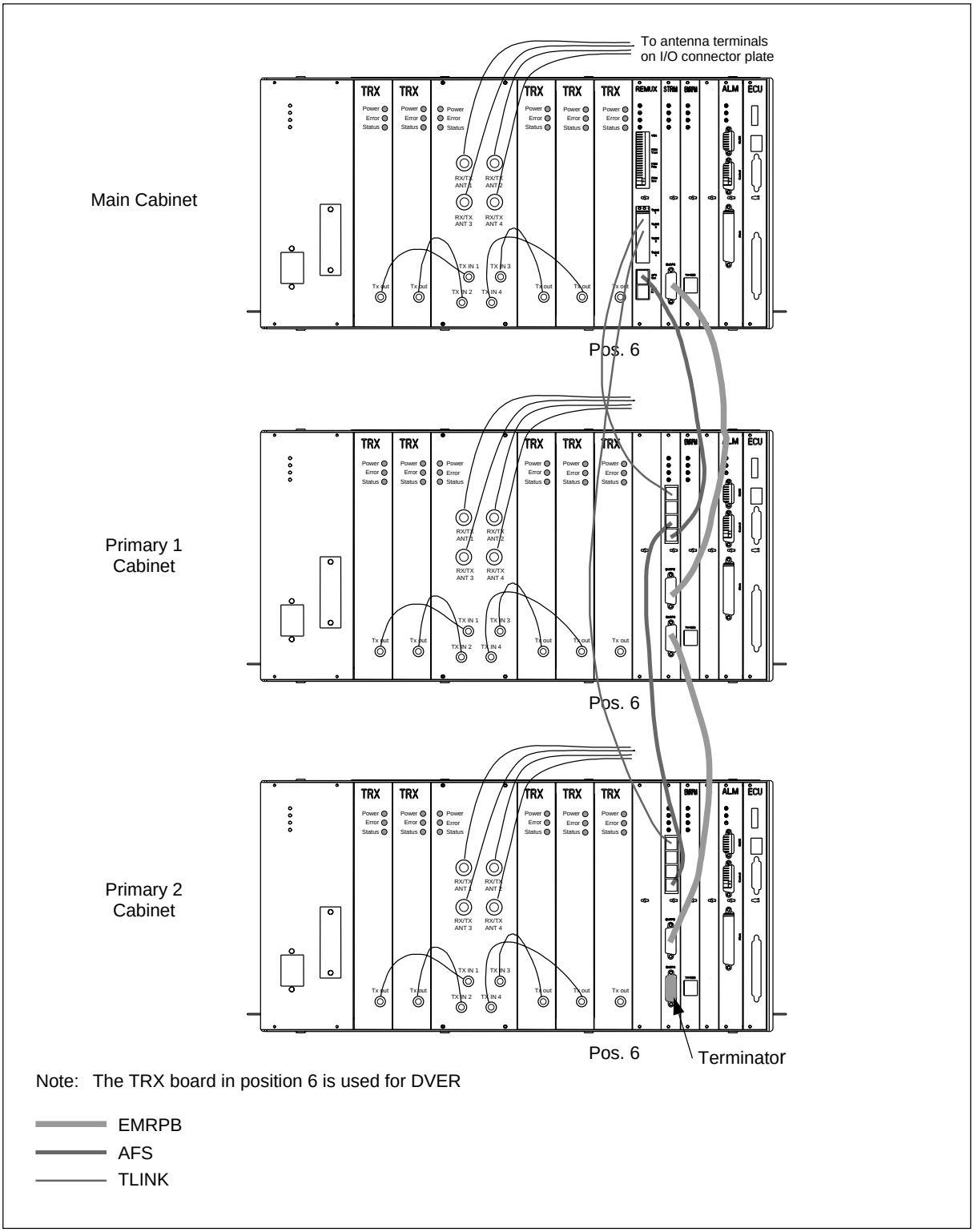

Figure 4-54. Three-Sector Site, each Cabinet has Four Antennas

18 RBS 884 Micro (1900 MHz) Cabinet Repainting

This section provides instructions for repainting RBS 884 Micro (1900 MHz) cabinets. The instructions are intended as general recommendations only and may not be suitable in all applications.

18.1 Required Materials and Tools

18.1.1 Materials

Prior to repainting the cabinet, obtain all materials listed in Table 4-15 on page 4-83

Table 4-15. Cabinet Repainting Materials

Part Number	Description
Refer to Paint Manufacturer	Two-component polyurethane coating (paint chip required for color matching)
N/A	80 grit (or finer) Sandpaper (for orbital sander)
N/A	120 grit (or finer) Sandpaper (for finish sanding)
N/A	Tack Cloth
N/A	Masking Tape

18.1.2 Tools

Prior to repainting the cabinet, obtain all tools listed in Table 4-16 on page 4-83

Table 4-16. Cabinet Repainting Tools

Part Number	Description
N/A	Orbital Sander
N/A	Paint Spraying Equipment
N/A	Sanding Blocks (as required)

18.2 Cabinet Surface Preparation

Prior to repainting the RBS 884 Micro (1900 MHz) cabinet, prepare the cabinet surface as outlined in the following steps:

DANGER!

Paint, paint dust, and paint refinishing chemicals can be hazardous to your health and result in injury or damage to equipment. Do not breathe paint fumes or paint dust. Wear protective breathing equipment and work only in well ventilated areas. Follow all local safety practices.

Caution!

Sanding the surface of the RBS 884 Micro (1900 MHz) cabinet may result in reduced corrosion resistance. Also, use of a darker paint color will degrade the thermal performance of the cabinet.

1. Using an orbital sander with 80 grit or finer sandpaper, lightly sand all surfaces to be painted.
2. Blow off any excess sanding dust with compressed air.
3. Using a tack cloth, wipe down all surfaces.
4. If scratches or imperfections are visible in the surface, lightly sand surfaces again using 120 grit or finer sandpaper.
5. **Caution!**

   To ensure proper paint adhesion, all paint dust and any other looses material must be removed from the cabinet surface.

   Using a tack cloth, wipe down all surfaces.
6. Mask all areas that are not to be painted, including hinges and door hardware.

18.3 Cabinet Painting

To apply the primer and finish paint to the cabinet, perform the following steps:

Applying Primer Paint to Cabinet

1. Using appropriate paint spraying equipment, apply primer to all areas to be painted.

2. Allow primer to dry for a minimum of 30 minutes.

   Note: Paint drying times vary according to environmental conditions such as temperature and humidity. Refer to the paint manufacturer's specifications for drying times.

3. When primer is dry, feather sand the edges of the primed areas.

4. Wipe all surfaces clean with a tack cloth. Ensure surface is free of all dust and debris.

Applying Finish Paint to Cabinet

5. Prepare finish paint as specified by the paint manufacturer.

   Note: The finish paint is a two-part polyurethane coating (paint and catalyst) that hardens with age. Painting time is limited after mixing. Refer to the paint manufacturer's specifications for working life of the mixed paint.

6. Using appropriate paint spraying equipment, apply the finish paint to all areas to be painted.

7. Allow paint to dry and apply one or more additional coats.

8. Allow painted cabinet to dry for a minimum of 24 hours (48 hours recommended) before handling or removing any masking.

9. After 24 to 48 hours, carefully remove masking from hinges and door hardware.

   Note: Two-component polyurethane paint includes a catalyst that causes the paint to harden and become more durable with age. Within the first 48 hours after application, the paint is soft and scuffs easily. Use care to not scuff or mar the surface.

Part 5

Hardware Replacement

1 Introduction 5-3

2 Safety Considerations 5-3
2.1 Grounding of the RBS Cabinets 5-3
2.2 Voltage Hazards 5-4
2.3 Radio Frequency Radiation 5-4
2.4 Beryllium Oxide 5-4
2.5 Heavy Loads 5-5

3 Product Handling and Inspection 5-6

4 General Troubleshooting 5-6
4.1 Prerequisites and Tools 5-6
4.2 Troubleshooting Procedure for RBS Cabinets 5-7

5 Alarm Troubleshooting 5-11

6 RBS Unit Hardware Replacement 5-14
6.1 Prerequisites and Tools 5-15
6.2 Power Supply Unit (PSU) Replacement . . 5-18
6.3 REMUX Unit Replacement 5-20
6.4 STRM Unit Replacement 5-23
6.5 CONN Unit Replacement 5-25
6.6 EMRPM Unit Replacement 5-28
6.7 TRX Unit Replacement 5-30
6.8 ANP/RFTL Unit Replacement 5-33
6.9 Alarm (ALM) Unit Replacement 5-35
6.10 Environmental Control Unit (ECU) Replacement 5-38
6.11 Fan Replacement 5-40
6.12 Main Heater Replacement 5-42
6.13 Battery Heater Replacement 5-45
6.14 Battery Replacement 5-49
6.15 AC Surge Suppressor Replacement 5-52
6.16 T1(E1) PCM Primary Surge Suppressor Replacement 5-55
6.17 T1(E1) PCM Secondary Surge Suppressor Replacement 5-56
6.18 Air Filter Replacement 5-58

1 Introduction

This part of the manual lists procedures for basic troubleshooting and hardware replacement of faulty items of equipment, such as cabinet units or cables.

The use of the procedures by a site maintenance technician may depend on instructions from MSC personnel able to determine the status of the RBS site equipment from the MSC.

The site maintenance technician may be asked to replace a particular unit using the procedure in Section 6 on page 5-14, or to follow the troubleshooting procedure in Section 4 on page 5-6 for determining a faulty unit. The troubleshooting procedure is also used if failures occur during the *power-up procedure*.

2 Safety Considerations

2.1 Grounding of the RBS Cabinets

This product is Safety Class 1 equipment.

The RBS cabinets must be connected to the AC power through a grounded power cable, with the ground wire firmly connected to an electrical ground (safety ground) at the power outlet.

DANGER!

Any interruption of the protective (grounding) conductor, or disconnection of the protective ground terminal will cause a potential shock hazard that could result in personal injury.

2.2 Voltage Hazards

DANGER!

Voltage over 100V is used in the AC equipment at the site. Observe safety precautions. Contact with power can cause death. Do not be misled by the term “low voltage”. Under adverse conditions, potentials as low as 50V can result in death. Do not work alone while working with AC power.

DANGER!

Do not touch high voltage connections when installing or operating equipment. If necessary, disconnect the AC power cable from the power unit. Do not connect the AC power cable to the power unit when the unit is removed from the RBS cabinet.

The power cable serves as the only power disconnection device for the cabinet.

Keep one hand away from the equipment, if the nature of the maintenance permits, to reduce the possibility of current flowing through vital body organs.

2.3 Radio Frequency Radiation

DANGER!

Radio frequency radiation from an antenna may be a danger to health, causing severe burns to skin and clothing.

All transmitters must be disabled prior to working with or near antenna.

2.4 Beryllium Oxide

Some equipment contains beryllium oxide in ceramic form.

Warning!

Beryllium oxide is poisonous and constitutes a health hazard if present in finely dispersed form, such as dust or smoke, which can be inhaled. Read local hazardous chemical regulations before working with beryllium oxide.

Units with components containing beryllium oxide are marked with a warning label. For detailed information on properties, health and environmental hazards, refer to the regulations issued by the local authorities.

The following rules must be obeyed by all persons handling beryllium oxide:

- Ceramics containing beryllium oxide must not be scraped, filed, ground, treated with acid or machined in any other way.
- Compressed air must **not** be used to clean units containing beryllium oxide.
- You must always wear protective gloves when handling beryllium oxide.
- Use wet rags to collect dust and particles from damaged beryllium oxide components. After use, place the rags in plastic bags and seal the bags completely.

Scrapped beryllium oxide must be treated as environmentally hazardous waste. Local authorities enforce regulations, regarding the treatment and disposal of environmentally hazardous waste. Investigate the local regulations which are applicable to you and comply with them.

2.5 Heavy Loads

Warning!

A heavy load lifted incorrectly can cause injury to persons and damage to the equipment can result.

A heavy load is considered to be 10 kg (approximately 22 lbs).

Note: A fully equipped RBS 884 Micro (1900 MHz) cabinet exceeds 105 kg (230 lbs). Therefore Ericsson recommends that two persons are present during the installation.

3 Product Handling and Inspection

Components may be damaged because of ESD. Read the *Electrostatic Discharge* section for information and directions.

A hardware replacement unit must always be kept in its original box until it is installed on a site.

The unit must not be exposed to wide variations in temperature, to direct sunshine, or to high levels of humidity, such as may occur if the unit is left in a car.

When handling circuits boards, do not touch any components or connector pins.

If the packing material is damaged, inspect the unit immediately. If the unit appears to be damaged, follow your local procedures or return it to your local service center for repair or hardware replacement.

A faulty unit must always be accompanied by a completed Repair Traveler Note, with written information concerning the circumstances of the suspected fault. A Repair Traveler Note is a tie-on tag, which can be attached to the unit.

4 General Troubleshooting

Operational status of the RBS equipment is indicated by LEDs mounted on the front of the units plugged into the cabinets.

In general, green LEDs are used for power status, red LEDs are used for error status, and yellow LEDs are used to indicate other types of operational status.

The procedure in this section is used to determine faulty units by visual inspection of the LEDs and other means. If the procedure does not result in the detection of a faulty unit, the MSC must be informed in order to determine if a problem at the site is still indicated at the MSC.

4.1 Prerequisites and Tools

4.1.1 Prerequisites

The troubleshooting procedure in this section is intended to be followed if an RBS unit fault is detected during the power-up procedure, or at the request of the MSC as a result of an RBS site equipment error indication at the MSC.

4.1.2 Tools

All the tools needed to troubleshoot the RBS 884 Micro (1900 MHz) are shown in Table 5-1 on page 5-7.

Table 5-1. Tools List

Product Number	Description
	Pen
LYB 250 01/14	ESD Wrist Strap and Cable[2]
LTD 117 02 and LTD 117 14	Unit Extractor Tool (Handle + Button)
	AC or AC/DC Voltmeter[1] (for checking the line voltage)
[1] Included in Tool Kit LTT 601 044/1 [2] Included in Tool Case LTT 601 84	

4.2 Troubleshooting Procedure for RBS Cabinets

RBS Cabinet Access

1. Unlock the door latches as shown in Figure 5-1 on page 5-7

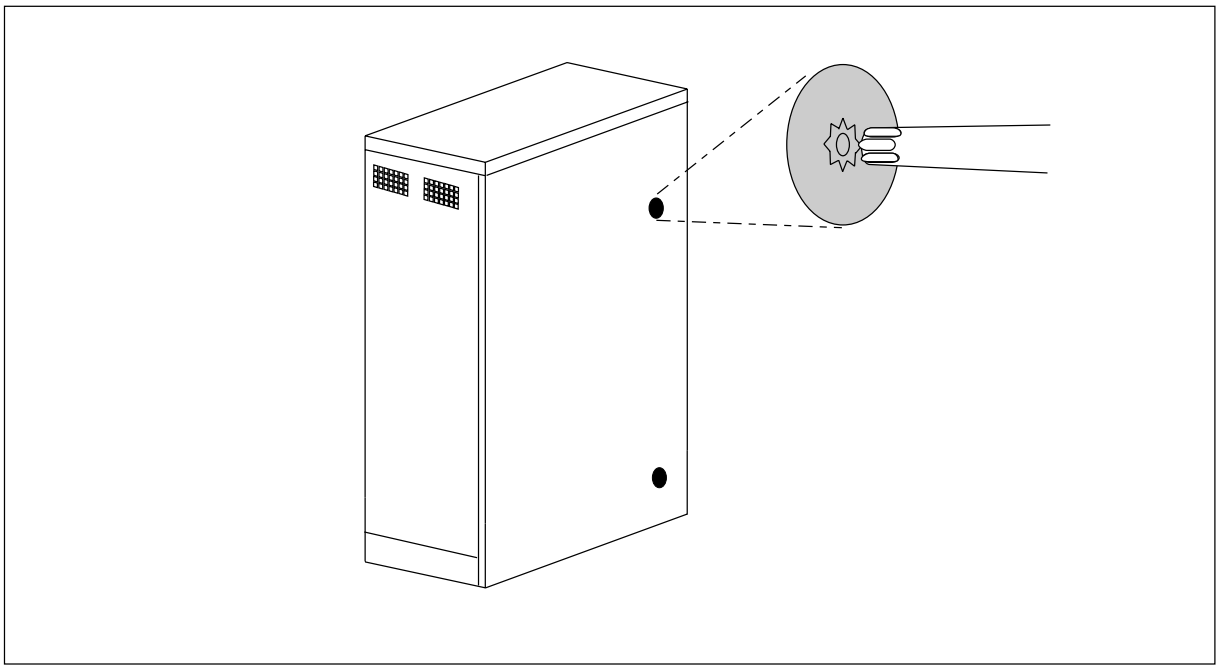

Figure 5-1. Unlocking the RBS Cabinet Door

2. Open the cabinet door and secure the wind latch at the top of the door. Open the door until the shoulder slides into the slot at the end of the bar.

   Note: To release the wind latch, lift up on the bar and close the door.

3. Attach the ESD strap to your wrist and connect the “alligator” connector to a suitable ground on the cabinet chassis. Do not attach to a painted or coated surface. See Figure 5-2 on page 5-8.

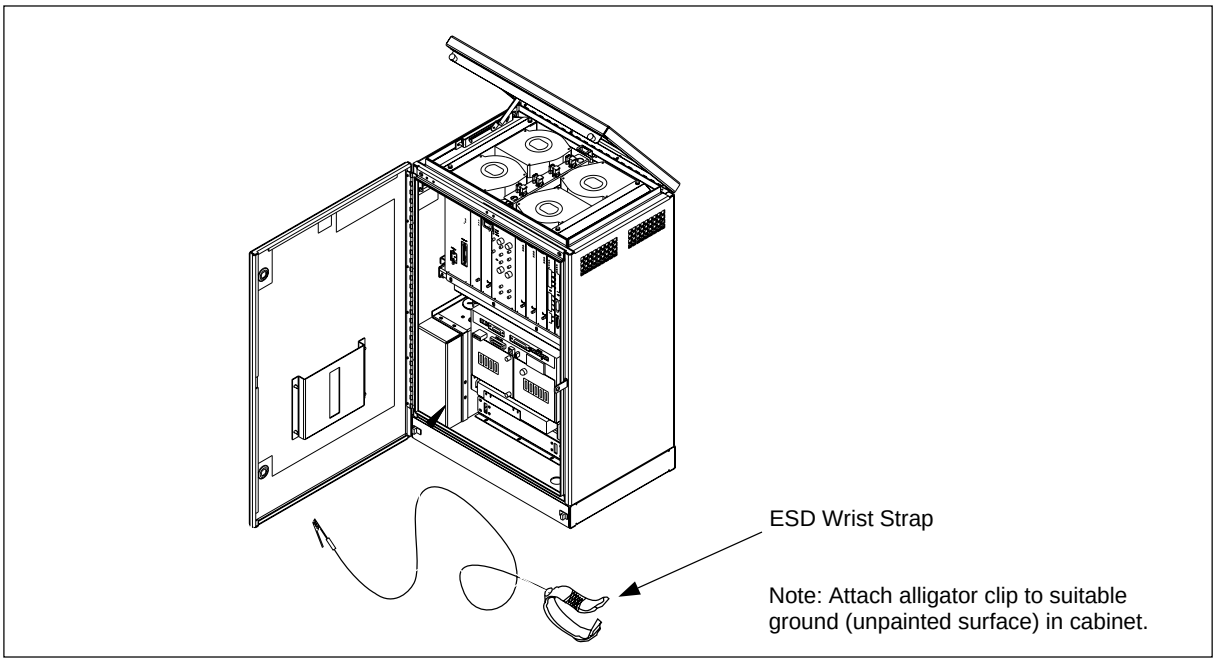

Figure 5-2. Opening the RBS Cabinet and Attaching the ESD Strap

Troubleshooting Flowchart

4. Follow the flowchart shown in Figure 5-3 on page 5-9 or Figure 5-4 on page 5-10 to identify a unit suspected to be faulty.

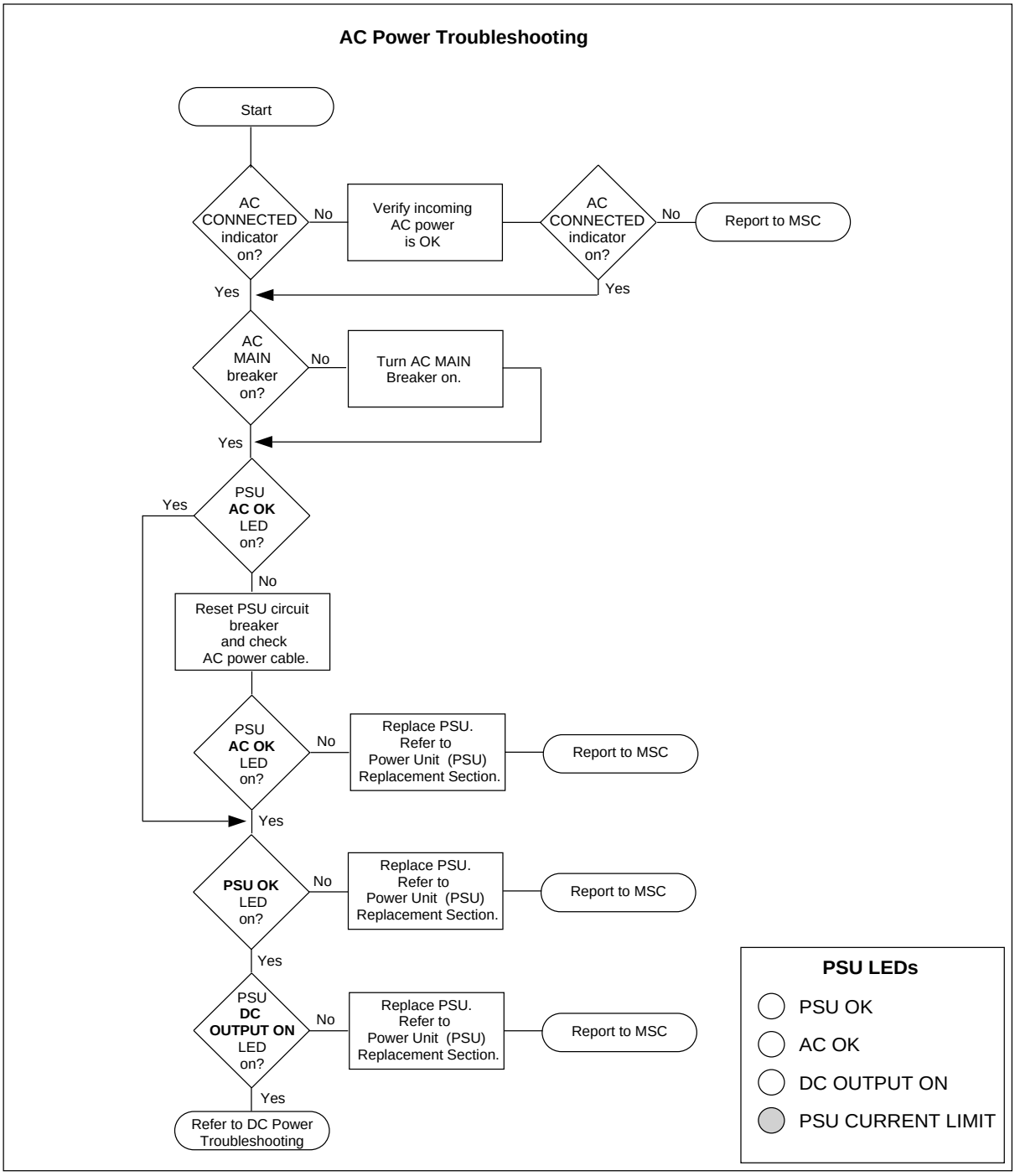

Figure 5-3. Troubleshooting Flowchart for AC Power Connection

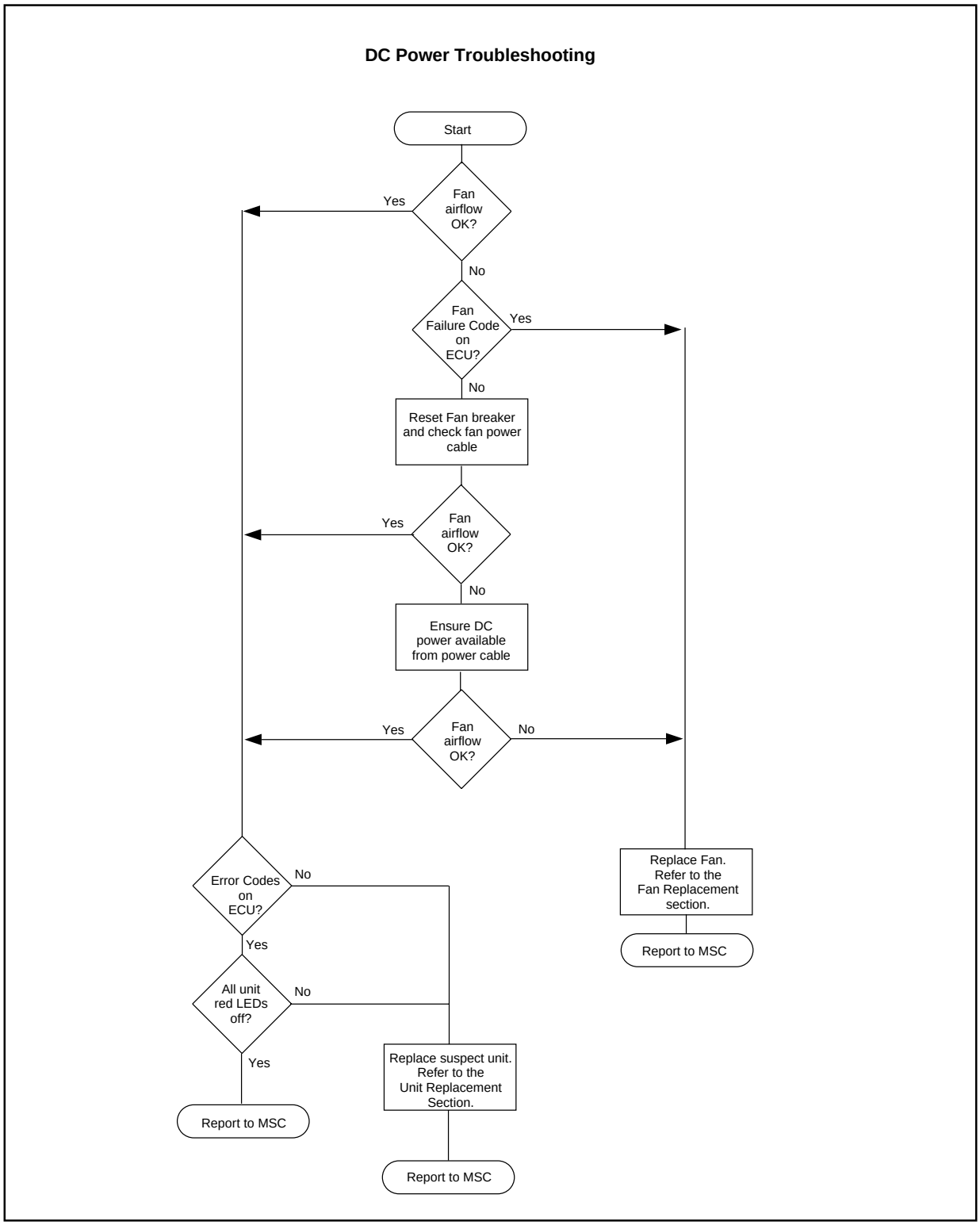

Figure 5-4. Troubleshooting Flowchart for DC Power Connection

5. Troubleshooting procedures has been carried out as part of the *power-up procedure*, return to the appropriate section and complete the *power-up procedure*.

5 Alarm Troubleshooting

Refer to Table 5-2 on page 5-11 for RBS 884 Micro (1900 MHz) alarm conditions and corrective actions. For alarm routing, refer to both Table 5-2 on page 5-11 and Figure 5-5 on page 5-14.

Table 5-2.

Alarm Name	Condition Alarm Source/Routing	Corrective Action/ Alarm Clearing
Single Fan Alarm	Fan not within ±25% of set speed (checked once per second)	Reset Fan breaker
	From ECU/TRXs via backplane	
Multi-Fan Alarm	Two or more fans not within ±25% of set speed (checked once per second)	Reset Fan breaker
	From ECU/TRXs via backplane	
AC Mains Failure Alarm	AC Mains ≤ minimum PSU voltage requirement	Self clears when AC Mains voltage is adequate to power PSU
	From PSU via AC/DC Distribution Box via cable to ECU via cable to EMRPM via backplane	
PSU Failure Alarm	AC Mains > 100 VAC and DC Out < 24 VDC and Output Current < 1A.	Self Clears (Trigger conditions not valid) after PSU power is within specification
	From PSU via AC/DC Distribution Box via cable to ECU via cable to EMRPM via backplane	

Table 5-2. (Continued)

	Condition	
Low Voltage Disconnect Alarm	DCBus Voltage < 22.9 VDC. Disconnects Battery when < 20.9 VDC.	Self Clears
	From AC/DC Distribution Box to ALM via cable	
Battery Thermal Alarm	Temperature of Battery Terminal > 70°	Self clears
	From AC/DC Distribution Box to ALM via cable	
Temperature Sensor Failure Alarm	One or more Temperature sensors shorted or open (checked once per second)	Self clears
	From ECU to AC/DC Distribution Box via cable to ALM via cable	
Temperature Shutdown Alarm	Subrack Inlet ≤ -6°C or Subrack Inlet ≥ +51°C or Exhaust ≥ +62°C. After alarm generation there is a six second delay before subrack is disconnected (checked once per second).	Self clears if Subrack Inlet ≥ -4°C and Subrack Inlet ≤ +49°C and Exhaust ≤ +60°C
	From ECU to AC/DC Distribution Box via cable to ALM via cable	
Main Heater Failure Alarm	Ten minute delay (warning) if ambient temp ≤ 0°C and Subrack Inlet < ambient + 5°C for ten minutes.	Reset Main Heater breaker
	From ECU to AC/DC Distribution Box via cable to ALM via cable	

Table 5-2. (Continued)

	Condition	
Battery Compartment Temperature Alarm	Ambient temp > +15°C and Battery Compartment > ambient + 10°C or Ambient temp < -5°C and Battery Compartment < ambient + 5°C	Self clears when temperature returns to within specifications.
	From ECU to AC/DC Distribution Box via cable to ALM via cable	
AC Surge Suppressor Alarm	AC Surge No AC Power = alarm	Self clears if AC Surge Suppressor is not damaged
	From AC Surge Suppressor via cable to AC/DC Distribution Box via cable to ALM	
Door Alarm	Top or Front Door is Open	Self clears when both doors closed
	From Switches via cable to AC/DC Distribution Box via cable to ALM	

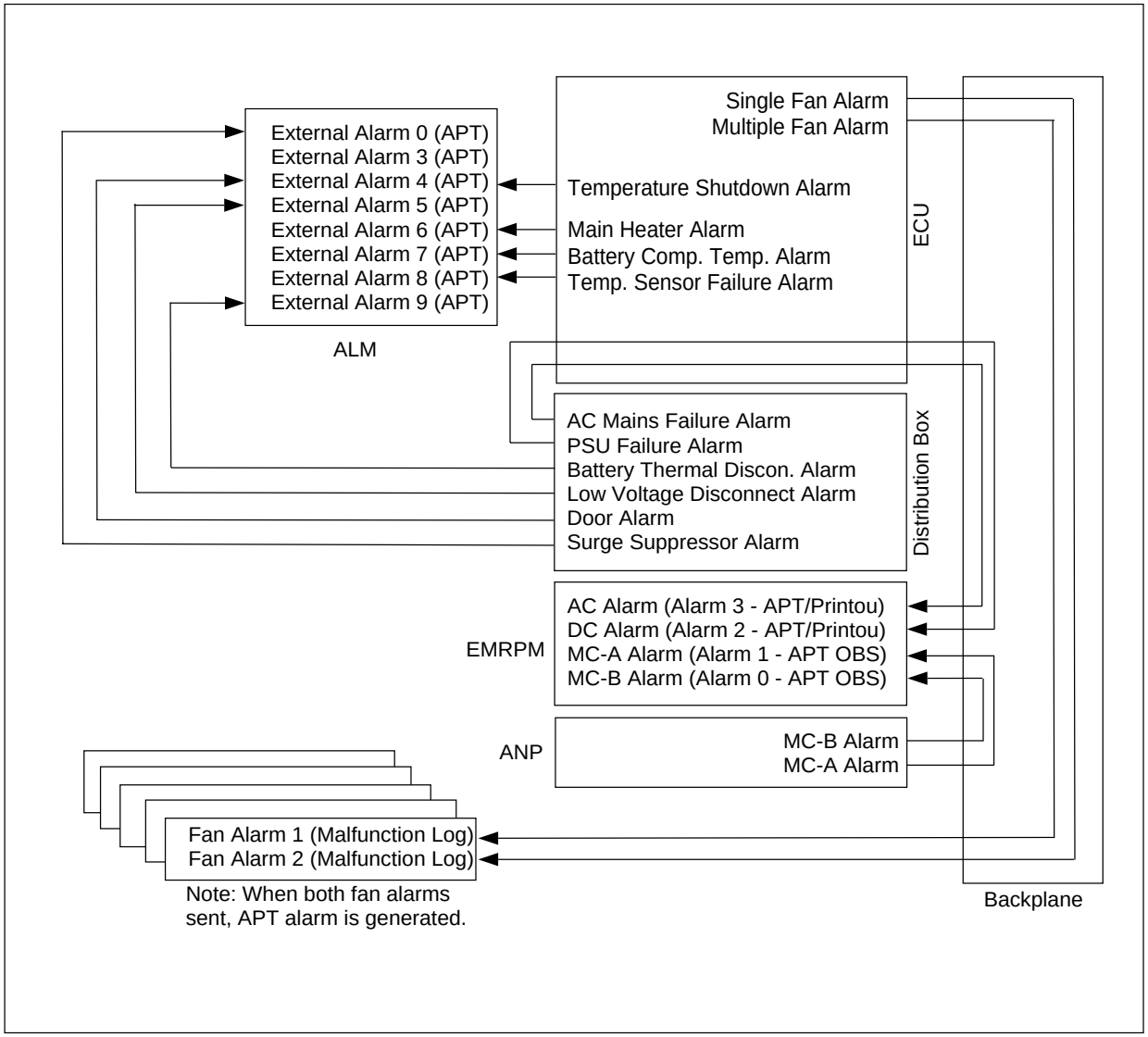

Figure 5-5. RBS 884 Micro (1900 MHz) Alarm Routing

6 RBS Unit Hardware Replacement

When a suspected faulty unit is identified either by indications at the MSC or by the troubleshooting procedure in Section 4 on page 5-6, follow the appropriate procedure in this section to replace the unit.

Hardware replacement procedures are provided for the following devices:

- Power Supply Unit (PSU)
- REMUX Unit
- STRM Unit

- CONN Unit
- EMRPM Unit
- TRX Unit
- ANP/RFTL Unit
- Alarm (ALM) Unit
- Environmental Control Unit (ECU)
- Fans
- Main Heater
- Battery Heater
- Batteries
- AC Surge Suppressor
- PCM (T1/E1) Primary Surge Suppressor
- PCM (T1/E1) Secondary Surge Suppressor
- Air Filter

6.1 Prerequisites and Tools

6.1.1 Prerequisites

Before a faulty unit is replaced, the hardware replacement unit must be available and must have the same or higher R-state number (R-state letters do not matter).

When units other than the power or fan unit are replaced, suitable blank panels (8M, 10M, or 12M) or dummy TRXs (RMUs) must be available in case the hardware replacement takes an extended amount of time. The blank panels ensure proper cooling and EMC shielding.

6.1.2 Tools

The tools required for unit hardware replacement are shown in Table 5-3 on page 5-16, Figure 5-6 on page 5-16, Figure 5-7 on page 5-17 and Figure 5-8 on page 5-17. Additionally, an ESD bag is required for the unit suspected to be faulty (other type of bag can be used for fan and power units).

Table 5-3. Tools for RBS Unit Hardware Replacement

Product Number	Description
LYB 250 01/14	ESD Wrist Strap and Cable
LTT 601 82	Torque Wrench set including: - Torque Wrench 0.6 Nm - Torx bit T10 for circuit board screws - SMA tool for the coaxial cables
LSA 126 11/10	Torx driver TX10
LTD 117 02 and LTD 117 14	Unit Extractor Tool (Handle and Button)
	Small Screwdriver or Pen (to set switches)
	Repair Traveler Note

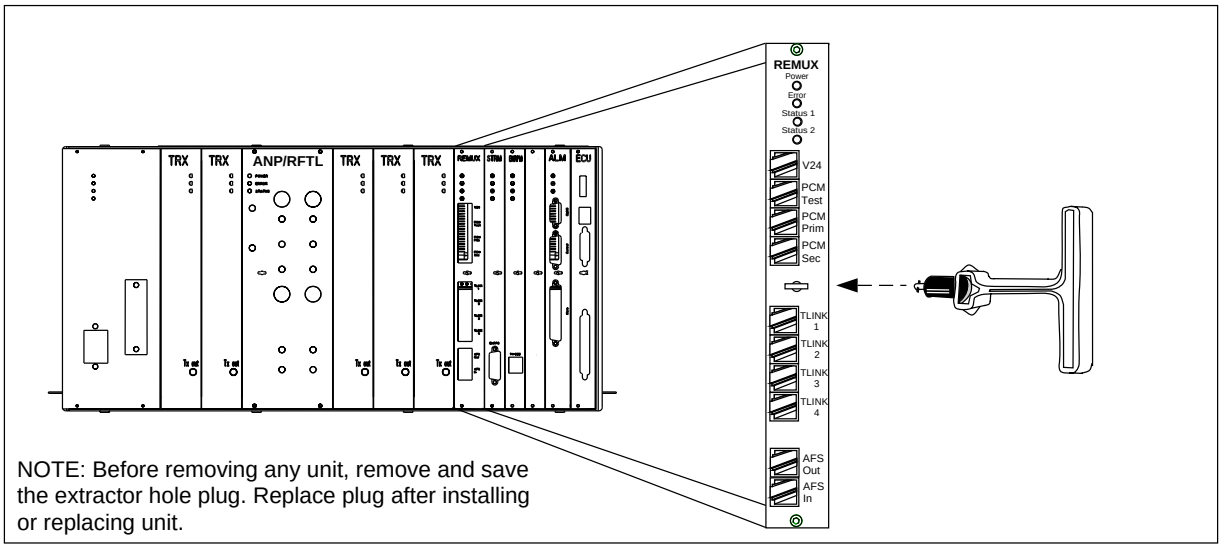

Figure 5-6. Unit Extractor Tool (Example with the REMUX Unit)

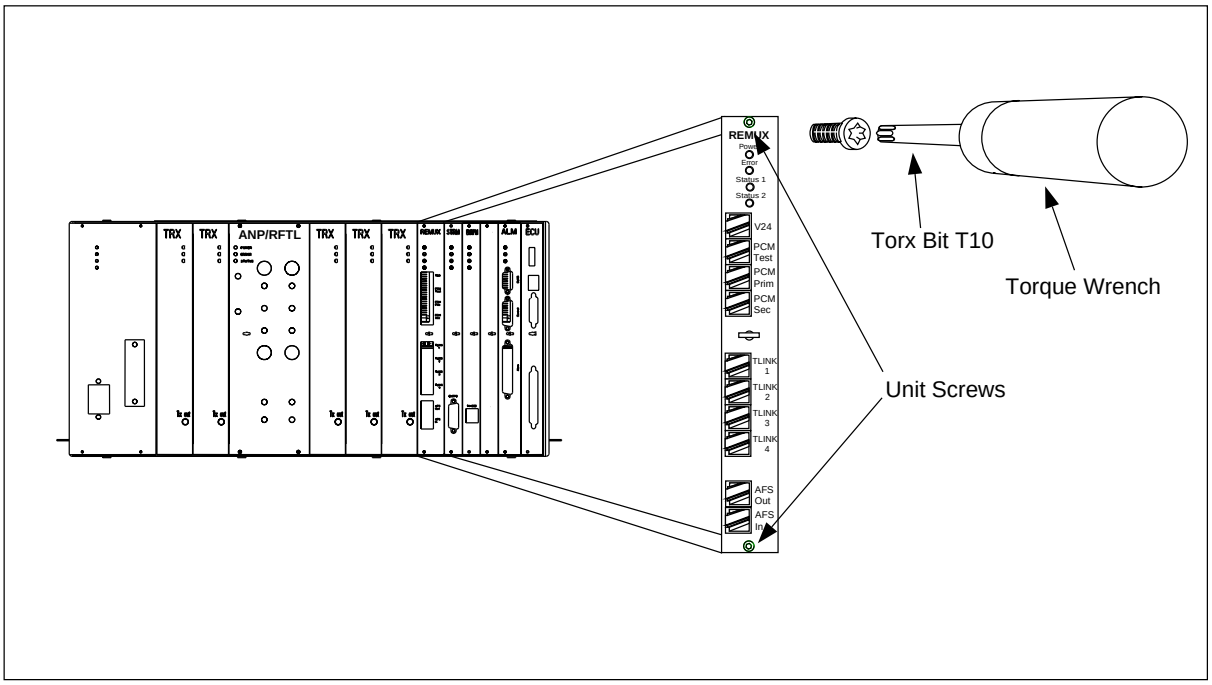

Figure 5-7. Torque Wrench with Torx Bit TX10 (Example with the REMUX Unit)

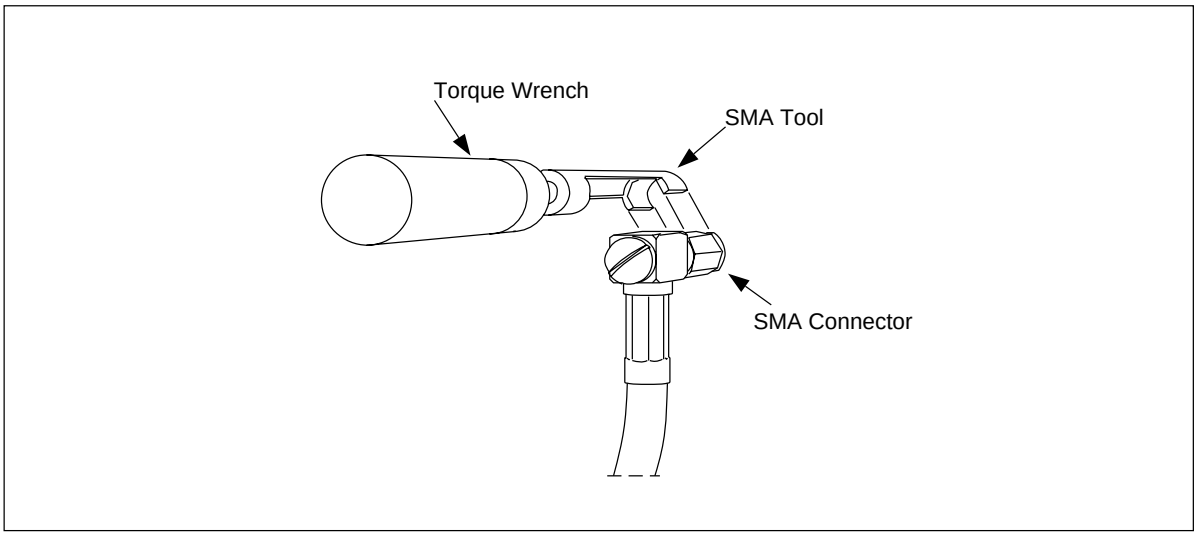

Figure 5-8. Torque Wrench with SMA Tool

6.2 Power Supply Unit (PSU) Replacement

Unit Removal

Warning!

The following procedure will disable the RBS 884 Micro (1900 MHz). The unit will be out of service during the procedure. Contact the MSC before performing the following procedure.

1. Get permission from the MSC to replace the unit. The MSC have to block RBS units before you start.

2. Open the cabinet door as described in the steps beginning with Step 1 on page 5-7.

3. **Warning!**

   A unit must never be replaced with another with a lower R-state number.

   Ensure the hardware replacement unit is the same type as the unit to be replaced, and that it has the same or higher R-state number.

4. **Warning!**

   Verify all TRX status LEDs (see Figure 5-14 on page 5-31) in the cabinet are off. If the main cabinet power unit is to be changed, all TRX status LEDs in all cabinets have to be checked.

   If any TRX status LEDs are on or flashing, contact the MSC.

5. Attach the ESD strap to your wrist and connect the free end of the strap cable to an appropriate ground conductor in the cabinet.

6. Locate the power unit shown in Figure 5-9 on page 5-19.

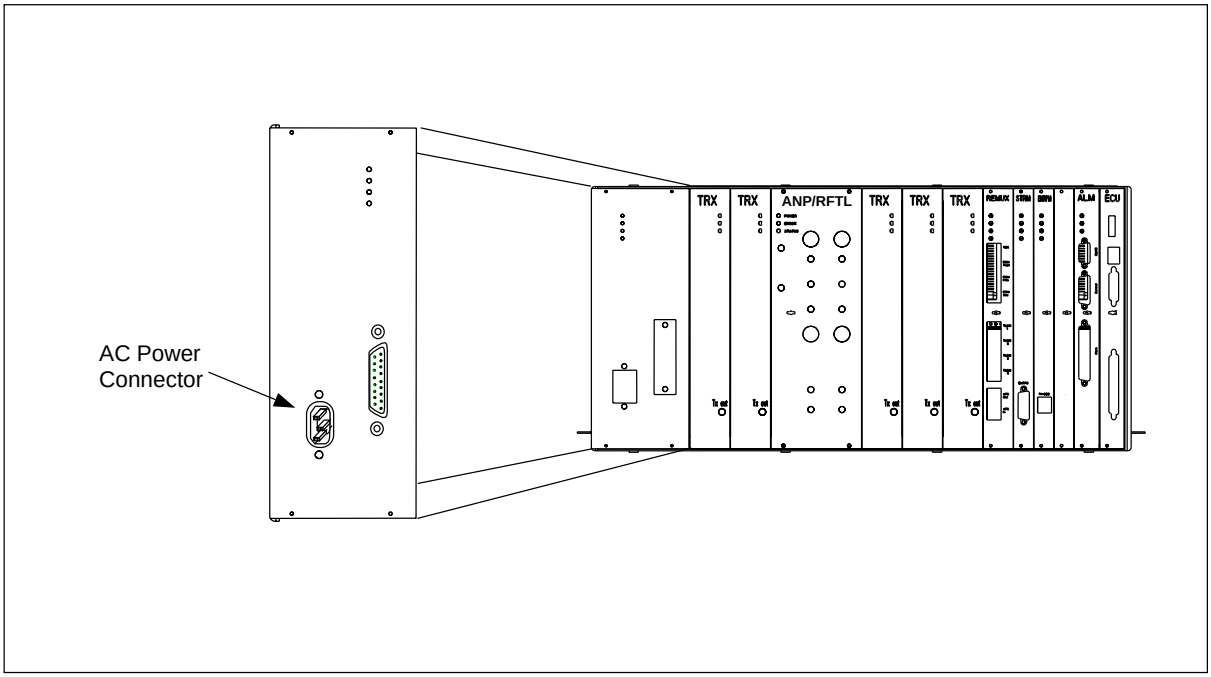

Figure 5-9. The Power Unit

7. Power down the RBS cabinet by turning the PSU and AC Mains circuit breakers off.

8. Disconnect the AC Power connector.

9. Disconnect the DC Power connector.

10. Use the torque wrench with the Torx bit TX10 to loosen the screws on the front of the unit.

11. Pull the unit out, and place it in a bag.

Unit Hardware Replacement

12. Remove the hardware replacement unit from its packaging and carefully slide the unit into the cabinet in place of the old unit.

13. Use torque wrench with the Torx bit TX10 to tighten the screws on the front.

    Turn the torque wrench until it slides to tighten to 0.6 Nm.

14. Reconnect the AC and DC Power connectors.

15. Follow the procedure for powering up the cabinet from the *Installation* part *Equipment Power Up*.

16. Inform the MSC that the unit has been replaced, so that they can perform a test.

17. Remove the ESD strap cable from the cabinet, and detach it from your wrist.

18. Close the cabinet door.

Unit Repair

19. Complete the Repair Traveler Note and attach it to the unit suspected to be faulty.

20. Pack the unit in the packing material from the new unit and return it to your local service center.

Plant Specification update

21. Update the *Plant Specification* in the *Site Installation Documentation* concerning the new unit: use the comments field to note the date of hardware replacement and new R-state number.

6.3 REMUX Unit Replacement

Unit Removal

Warning!

The following procedure will disable the RBS 884 Micro (1900 MHz). The unit will be out of service during the procedure. Contact the MSC before performing the following procedure. This procedure will also disable any additional sectors and cascaded RBS systems.

1. Get permission from the MSC to replace the unit.

2. Open the cabinet door as described in the steps beginning with Step 1 on page 5-7.

3. **Warning!**

   A unit must never be replaced with another with a lower R-state number.

   Check that the hardware replacement unit is the same type as the unit to be replaced, and that it has the same or higher R-state.

4.

Warning!

Check that the REMUX status LEDs (see Figure 5-10 on page 5-21) and all TRX status LEDs (see Figure 5-14 on page 5-31) in all cabinets are off.

If any of the mentioned status LEDs are on or flashing, contact the MSC.

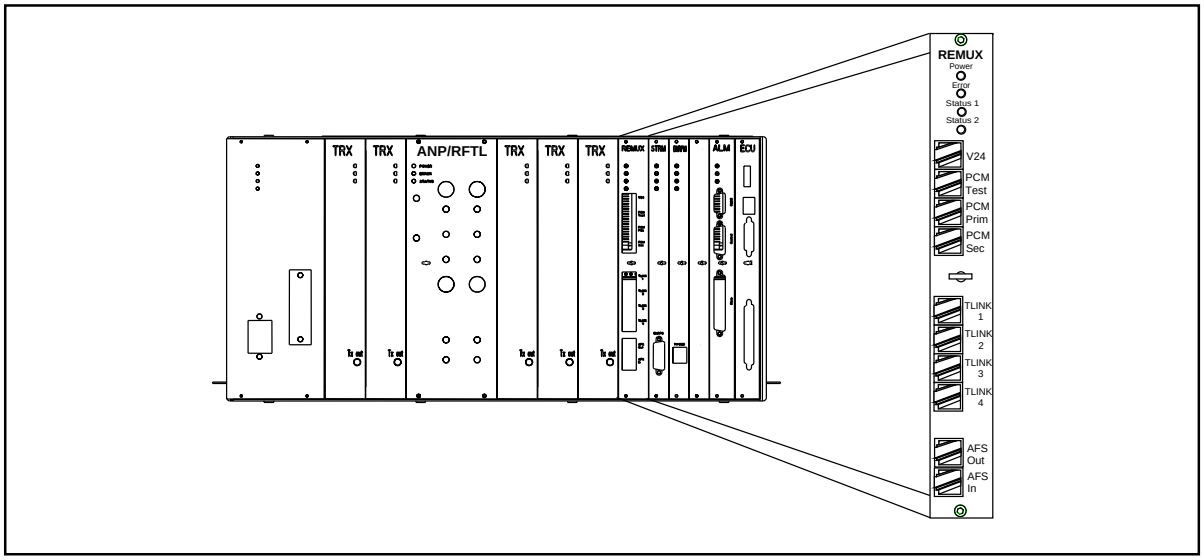

Figure 5-10. The REMUX Unit

5. Attach the ESD strap to your wrist and connect the free end of the strap cable to an appropriate ground conductor in the cabinet.

6. Make a note of the cables connected to the unit.

7. Disconnect the cables from the unit.

8. Use the torque wrench with the Torx bit TX10 to loosen the screws on the front of the unit.

9.

Warning!

The slot in the cabinet must not be left empty for an extended period of time. If there is any delay in installing the hardware replacement unit, then a blank panel (Blank 12M) must be screwed into the slot position (or the old unit left in position).

Pull out the unit, using the extractor tool, and place it in an ESD bag. Save the extractor hole plug. Replace the plug after installing or replacing unit.

Unit Hardware Replacement

10. Remove the hardware replacement unit from its ESD bag and set its switches to match those on the old unit.

    The switch settings are described in the *Installation* part *Setting the Unit Switches*.

11. Carefully slide the replacement unit into the cabinet in place of the old unit. Push the unit firmly into the backplane connector.

12. Use the torque wrench with the Torx bit TX10 to tighten the screws on the front.

    Turn the torque wrench until it slides to tighten to 0.6 Nm.

13. Check that the green power LED on the unit is on and the red error LED is off. If this is not the case, refer to the troubleshooting procedure in Section 4 on page 5-6 for detection of units suspected to be faulty.

14. Connect the cables that were disconnected in Step 7 on page 5-21 to the unit.

    If you are not sure of how the cables were connected, see the *Installation* part *External Cable Installation* (external cables) and *Appendix C* (internal cables).

15. The REMUX requires approximately 20 minutes to synchronize. If the RBS 884 Micro (1900 MHz) does not become operational after 20 minutes, issue a software repair command to the STRM. The command is RECEI.

16. Inform the MSC that the unit has been replaced, so that they can perform a test.

17. Remove the ESD strap cable from the cabinet, and detach it from your wrist.

18. Close the cabinet door.

Unit Repair

19. Complete the Repair Traveler Note and attach it to the unit suspected to be faulty.

20. Pack the unit in the packing material from the new unit and return it to your local service center.

Plant Specification update

21. Update the *Plant Specification* in the *Site Installation Documentation* concerning the new unit: use the comments field to note the date of hardware replacement and new R-state.

6.4 STRM Unit Replacement

Unit Removal

Warning!

The following procedure will disable the RBS 884 Micro (1900 MHz). The unit will be out of service during the procedure. Contact the MSC before performing the following procedure. This procedure will also disable any additional sectors and cascaded RBS systems.

1. Get permission from the MSC to replace the unit.
2. Open the cabinet door as described in the steps beginning with Step 1 on page 5-7.
3. **Warning!**

   A unit must never be replaced with another with a lower R-state number.

   Check that the hardware replacement unit is the same type as the unit to be replaced, and that it has the same or higher R-state number.
4. **Warning!**

   Check that the STRM status LEDs (see Figure 5-11 on page 5-24) and all TRX status LEDs (see Figure 5-14 on page 5-31) in all cabinets are off.

   If any of the mentioned status LEDs are on or flashing, contact the MSC.

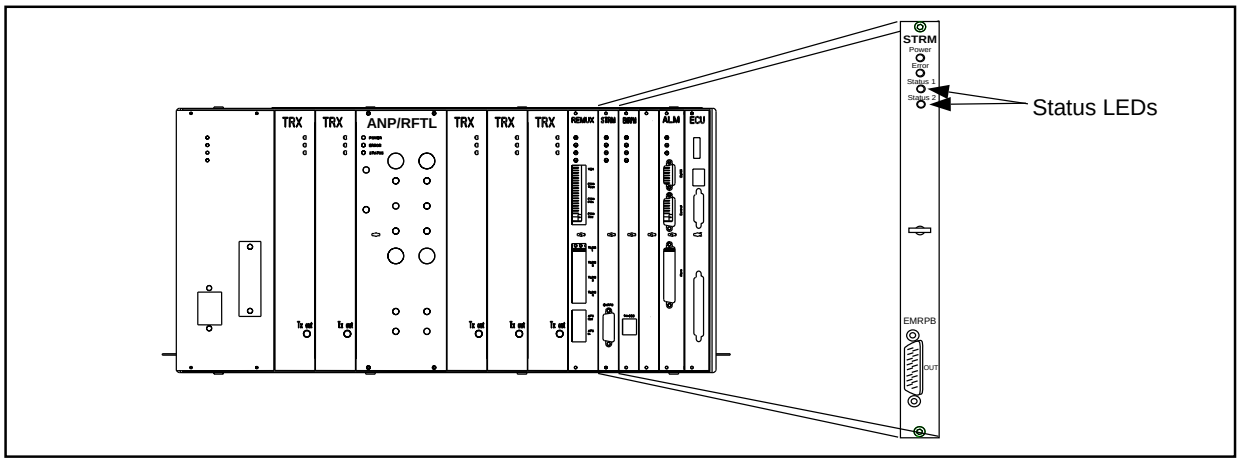

Figure 5-11. The STRM Unit

5. Attach the ESD strap to your wrist and connect the free end of the strap cable to an appropriate ground conductor in the cabinet.

6. Disconnect the cable or terminator from the unit.

7. Use the torque wrench with the Torx bit TX10 to loosen the screws on the front of the unit.

8.

Warning!

The slot in the cabinet must not be left empty for an extended period of time. If there is any delay in installing the hardware replacement unit, a blank panel (Blank 8M) must be screwed into the slot position.

Pull out the unit, using the extractor tool, and place it in an ESD bag. Save the extractor hole plug. Replace the plug after installing or replacing unit.

Hardware Replacement Unit

9. Remove the hardware replacement unit from its ESD bag

10. Carefully slide the replacement unit into the cabinet in place of the old unit. Push the unit firmly into the backplane connector.

11. Use the torque wrench with the Torx bit TX10 to tighten the screws on the front.

    Turn the torque wrench until it slides to tighten to 0.6 Nm.

12. Check that the green power LED on the unit is on and the red error LED is off. If this is not the case, refer to the troubleshooting procedure in Section 4 on page 5-6 for detection of units suspected to be faulty.

13. Reconnect the cable or terminator that was disconnected earlier.

14. If the RBS 884 Micro (1900 MHz) does not become operational, cycle the power to the cabinet to reload the software.

15. Inform the MSC that the unit has been replaced, so that they can perform a test.

16. Remove the ESD strap cable from the cabinet, and detach it from your wrist.

17. Close the cabinet door.

Unit Repair

18. Complete the Repair Traveler Note and attach it to the unit suspected to be faulty.

19. Pack the unit in the packing material from the new unit and return it to your local service center.

Plant Specification update

20. Update the *Plant Specification* in the *Site Installation Documentation* concerning the new unit: use the comments field to note the date of hardware replacement and new R-state.

6.5 CONN Unit Replacement

Unit Removal

Warning!

The following procedure will disable the RBS 884 Micro (1900 MHz). The unit will be out of service during the procedure. Contact the MSC before performing the following procedure.

1. Get permission from the MSC to replace the unit.

2. Open the cabinet door as described in the steps beginning with Step 1 on page 5-7.

3.

Warning!

A unit must never be replaced with another with a lower R-state number.

Check that the hardware replacement unit is the same type as the unit to be replaced, and that it has the same or higher R-state number.

4.

Warning!

Check that all TRX status LEDs (see Figure 5-14 on page 5-31) in the relevant cabinet are off.

If they are on or flashing, contact the MSC.

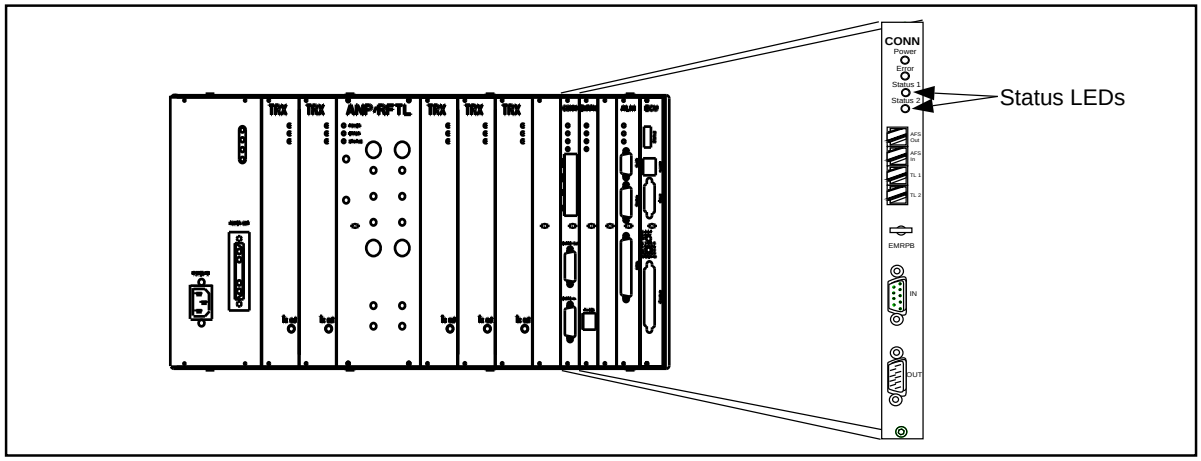

Figure 5-12. The CONN Unit

5. Attach the ESD strap to your wrist and connect the free end of the strap cable to an appropriate ground conductor in the cabinet.

6. Make a note of the cables connected to the unit.

7. Disconnect the cables from the unit.

8. Use the torque wrench with the Torx bit TX10 to loosen the screws on the front of the unit.

9.

Warning!

The slot in the cabinet must not be left empty for an extended period of time. If there is any delay in installing the hardware replacement unit, a blank panel (Blank 8M) must be screwed into the slot position.

Pull out the unit, using the extractor tool, and place it in an ESD bag. Save the extractor hole plug. Replace the plug after installing or replacing unit.

Hardware Replacement Unit

10. Remove the hardware replacement unit from its ESD bag.

11. Carefully slide the replacement unit into the cabinet in place of the old unit. Push the unit firmly into the backplane connector.

12. Use the torque wrench with the Torx bit TX10 to tighten the screws on the front.

    Turn the torque wrench until it slides to tighten to 0.6 Nm.

13. Check that the green power LED on the unit is on and the red error LED is off. If this is not the case, refer to the troubleshooting procedure in Section 4 on page 5-6 for detection of units suspected to be faulty.

14. Connect the cables that were disconnected earlier.

15. Inform the MSC that the unit has been replaced, so that they can perform a test.

16. Remove the ESD strap cable from the cabinet, and detach it from your wrist.

17. Close the cabinet door.

Unit Repair

18. Complete the Repair Traveler Note and attach it to the unit suspected to be faulty.

19. Pack the unit in the packing material from the new unit and return it to your local service center.

Plant Specification update

20. Update the *Plant Specification* in the *Site Installation Documentation* concerning the new unit: use the comments field to note the date of hardware replacement and new R-state.

6.6 EMRPM Unit Replacement

Unit Removal

Warning!

The following procedure will disable the RBS 884 Micro (1900 MHz). The unit will be out of service during the procedure. Contact the MSC before performing the following procedure.

1. Get permission from the MSC to replace the unit.
2. Open the cabinet door as described in the steps beginning with Step 1 on page 5-7.
3. **Warning!**

   A unit must never be replaced with another with a lower R-state number.

   Check that the hardware replacement unit is the same type as the unit to be replaced, and that it has the same or higher R-state number.
4. **Warning!**

   Check that the EMRPM status LEDs (see Figure 5-13 on page 5-29) and all TRX status (see Figure 5-14 on page 5-31) in the relevant cabinet are off. If any main cabinet EMRPM is to be changed, all TRX status LEDs in all cabinets have to be checked.

   If any of the mentioned status LEDs are on or flashing, contact the MSC.

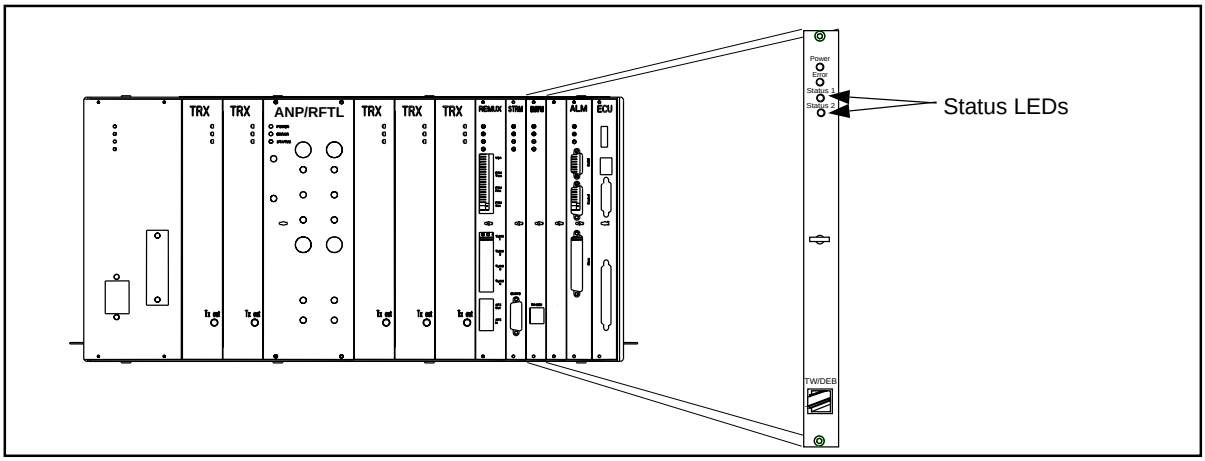

Figure 5-13. An EMRPM Unit

5. Attach the ESD strap to your wrist and connect the free end of the strap cable to an appropriate ground conductor in the cabinet.

6. Disconnect the cables from the unit.

7. Use the torque wrench with the Torx bit TX10 to loosen the screws on the front of the unit.

8.

Warning!

The slot in the cabinet must not be left empty for an extended period of time. If there is any delay in installing the hardware replacement unit, a blank panel (Blank 8M) must be screwed into the slot position.

Pull out the unit, using the extractor tool, and place it in an ESD bag. Save the extractor hole plug. Replace the plug after installing or replacing unit.

Unit hardware replacement

9. Remove the replacement unit from its ESD bag and set its switches to match those on the old unit.

   The EMRPM unit has an address switch. The settings are described in *Installation, Setting the Unit Switches*.

10. Carefully slide the replacement unit into the cabinet in place of the old unit. Push the unit firmly into the backplane connector.

11. Use the torque wrench with the Torx bit TX10 or TX8 to tighten the screws on the front.

    Turn the torque wrench until it slides to tighten to 0.6 Nm.

12. Check that the green power LED on the unit is on and the red error LED is off. If this is not the case, refer to the troubleshooting procedure in Section 4 on page 5-6 for detection of units suspected to be faulty.

13. If the RBS 884 Micro (1900 MHz) does not become operational after five to eight minutes, cycle the power to the cabinet to reload the software.

14. Inform the MSC that the unit has been replaced, so that they can perform a test.

15. Remove the ESD strap cable from the cabinet, and detach it from your wrist.

16. Close the cabinet door.

Unit Repair

17. Complete the Repair Traveler Note and attach it to the unit suspected to be faulty.

18. Pack the unit in the packing material from the new unit and return it to your local service center.

Plant Specification update

19. Update the *Plant Specification* in the *Site Installation Documentation* concerning the new unit: use the comments field to note the date of hardware replacement and new R-state.

6.7 TRX Unit Replacement

Unit Removal

1. Get permission from the MSC to replace the unit.

2. Open the cabinet door as described in the steps beginning with Step 1 on page 5-7.

3.

Warning!

A unit must never be replaced with another with a lower R-state number.

Check that the hardware replacement unit is the same type as the unit to be replaced, and that it has the same or higher R-state number.

4.

Warning!

Check that the status LED on the TRX to be replaced (see Figure 5-14 on page 5-31) is off.

If it is on or flashing, contact the MSC.

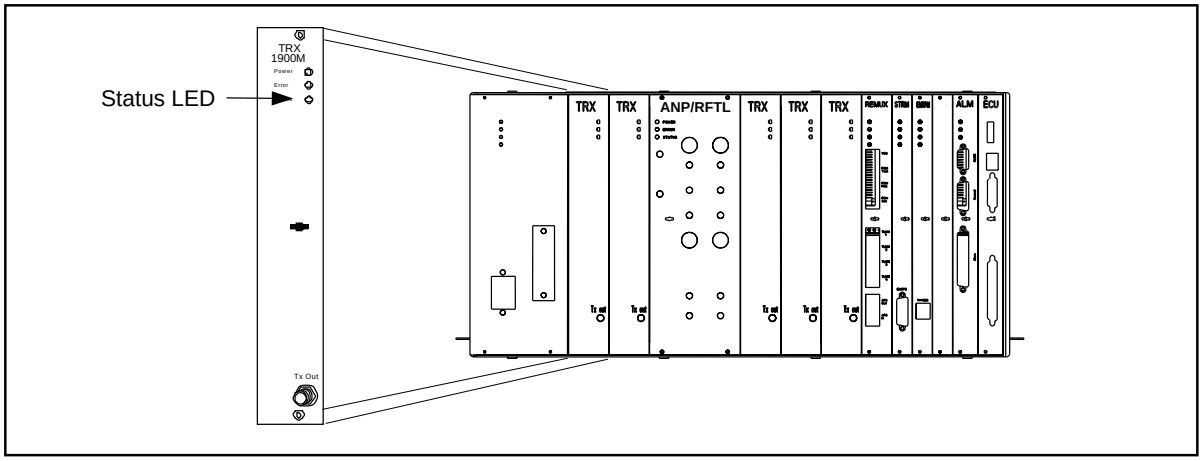

Figure 5-14. A TRX Unit

5. Attach the ESD strap to your wrist and connect the free end of the strap cable to an appropriate ground conductor in the cabinet.

6. Disconnect the cable from the unit, using the torque wrench with the SMA tool.

7. Use the torque wrench with the Torx bit TX10 to loosen the screws on the front of the unit.

8.

Warning!

The slot in the cabinet must not be left empty for an extended period of time. If there is any delay in installing the hardware replacement unit, an RMU (dummy TRX) must be installed or the old TRX left in position.

Pull out the unit, using the extractor tool, and place it in an ESD bag. Save the extractor hole plug. Replace the plug after installing or replacing unit.

Unit hardware replacement

9. Remove the hardware replacement unit from its ESD bag.

10. Carefully slide the replacement unit into the cabinet in place of the old unit. Push the unit firmly into the backplane connector.

11. Use the torque wrench with the Torx bit TX10 to tighten the screws on the front.

    Turn the torque wrench until it slides to tighten to 0.6 Nm.

12. Check that the green power LED on the unit is on and the red error LED is off. If this is not the case, refer to the troubleshooting procedure in Section 4 on page 5-6 for detection of units suspected to be faulty.

13. Connect the cable that was disconnected earlier.

    When attaching the cable connector to the connector on the unit, hand-tighten as much as possible. Thereafter, fully tighten using the torque wrench with the SMA tool. When turning the torque wrench until it slides, the connector is tightened with the torque 0.6 Nm.

14. Inform the MSC that the unit has been replaced, so that they can perform a test.

15. Remove the ESD strap cable from the cabinet, and detach it from your wrist.

16. Close the cabinet door.

Unit Repair

17. Complete the Repair Traveler Note and attach it to the unit suspected to be faulty.

18. Pack the unit in the packing material from the new unit and return it to your local service center.

    Note: *Do not* dispose of the TRX unit. Its components contain beryllium oxide.

Plant Specification update

19. Update the *Plant Specification* in the *Site Installation Documentation* concerning the new unit: use the comments field to note the date of hardware replacement and new R-state.

6.8 ANP/RFTL Unit Replacement

Unit Removal

Warning!

The following procedure will disable the RBS 884 Micro (1900 MHz). The unit will be out of service during the procedure. Contact the MSC before performing the following procedure.

1. Get permission from the MSC to replace the unit.
2. Open the cabinet door as described in the steps beginning with Step 1 on page 5-7.
3. **Warning!**

   A unit must never be replaced with another with a lower R-state number.

   Check that the hardware replacement unit is the same type as the unit to be replaced, and that it has the same or higher R-state number.
4. **Warning!**

   Check that the status LED on the unit to be replaced (see Figure 5-15 on page 5-34) is off.

   If it is on or flashing, contact the MSC.

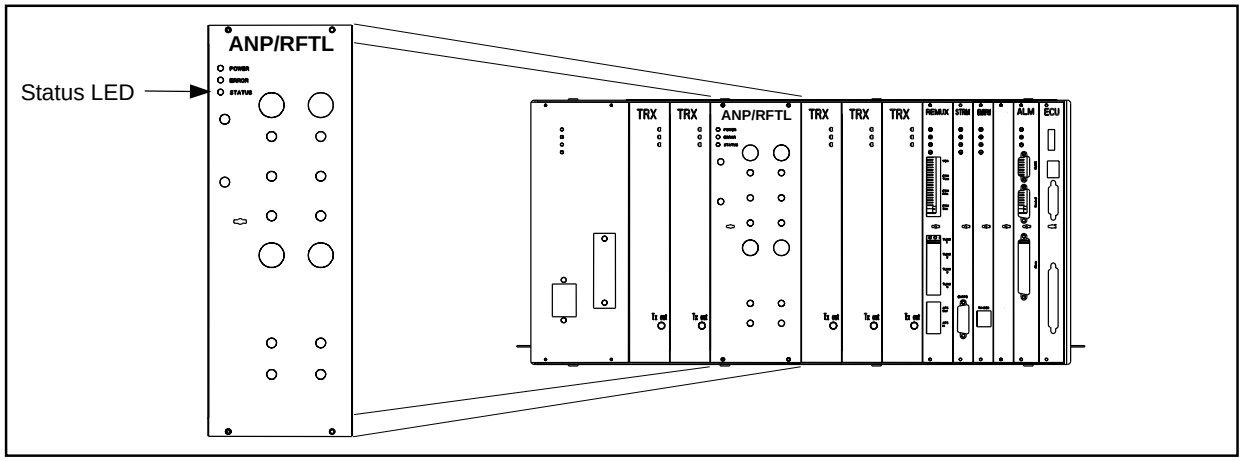

Figure 5-15. The ANP/RFTL Unit

5. Attach the ESD strap to your wrist and connect the free end of the strap cable to an appropriate ground conductor in the cabinet.

6. Make a note of the cables connected to the unit.

7. Disconnect the cables from the unit. Disconnect antenna cables by hand. Use the torque wrench with the SMA tool for other cables.

8. Use the torque wrench with the Torx bit TX10 or TX8 to loosen the screws on the front of the unit.

9.

Warning!

The slot in the cabinet must not be left empty for an extended period of time. If there is any delay in installing the hardware replacement unit, leave the old unit in the slot until the replacement unit is available.

Pull out the unit, using the extractor tool, and place it in an ESD bag. Save the extractor hole plug. Replace the plug after installing or replacing unit.

Unit Hardware Replacement

10. Remove the hardware replacement unit from its ESD bag.

11. Carefully slide the replacement unit into the cabinet in place of the old unit. Push the unit firmly into the backplane connectors.

12. Use the torque wrench with the Torx bit TX10 to tighten the screws on the front.

    Turn the torque wrench until it slides to tighten to 0.6 Nm.

13. Check that the green power LED on the unit is on and the red error LED is off. If this is not the case, refer to the *troubleshooting* procedure in Section 4 on page 5-6 for detection of units suspected to be faulty.

14. Connect the cables that were disconnected earlier.

    When attaching the cable connector to the connector on the unit, hand-tighten as much as possible. Fully tighten SMA connectors using the torque wrench with the SMA tool. Turn the torque wrench until it slides. The torque wrench tightens the connector to a torque of 0.6 Nm. Hand tighten TNC connectors. Do not use the torque wrench on TNC connectors.

    If you are not sure of how the cables were connected, see the *Installation* part *External Cable Installation* (external cables) and *Appendix C* (internal cables).

15. Inform the MSC that the unit has been replaced, so that they can perform a test.

16. Remove the ESD strap cable from the cabinet, and detach it from your wrist.

17. Close the cabinet door.

Unit Repair

18. Complete the Repair Traveler Note and attach it to the unit suspected to be faulty.

19. Pack the unit in the packing material from the new unit and return it to your local service center.

Plant Specification update

20. Update the *Plant Specification* in the *Site Installation Documentation* concerning the new unit: use the comments field to note the date of hardware replacement and new R-state.

6.9 Alarm (ALM) Unit Replacement

Unit Removal

1. Get permission from the MSC to replace the unit.

2. Open the cabinet door as described in the steps beginning with Step 1 on page 5-7.

3.

Warning!

A unit must never be replaced with another with a lower R-state number.

Check that the hardware replacement unit is the same type as the unit to be replaced, and that it has the same or higher R-state number.

4.

Warning!

Check that the status LED on the unit (see Figure 5-16 on page 5-36) is off.

If it is on or flashing, contact the MSC.

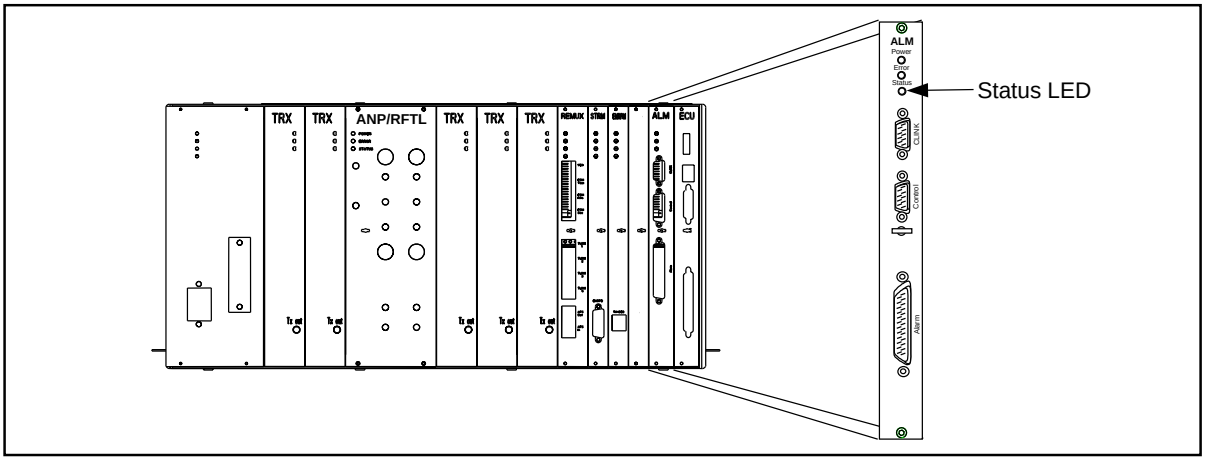

Figure 5-16. The Alarm Unit

5. Attach the ESD strap to your wrist and connect the free end of the strap cable to an appropriate ground conductor in the cabinet.

6. Make a note of the cables connected to the unit.

7. Disconnect the cables from the unit.

8. Use the torque wrench with the Torx bit TX10 to loosen the screws on the front of the unit.

   Note: All External Alarms are disabled when the ALM unit is blocked.

9.

Warning!

The slot in the cabinet must not be left empty for an extended period of time. If there is any delay in installing the hardware replacement unit, a blank panel (Blank 10M) must be screwed into the slot position.

Pull out the unit, using the extractor tool, and place it in an ESD bag. Save the extractor hole plug. Replace the plug after installing or replacing unit.

Unit Hardware Replacement

10. Remove the hardware replacement unit from its ESD bag.

11. Carefully slide the replacement unit into the cabinet in place of the old unit. Push the unit firmly into the backplane connector.

12. Use the torque wrench with the Torx bit TX10 to tighten the screws on the front.

    Turn the torque wrench until it slides to tighten to 0.6 Nm.

13. Check that the green power LED on the unit is on and the red error LED is off. If this is not the case, refer to the *troubleshooting* procedure in Section 4 on page 5-6 for detection of units suspected to be faulty.

14. Connect the cables that were disconnected earlier.

15. Inform the MSC that the unit has been replaced, so that they can perform a test.

16. Remove the ESD strap cable from the cabinet, and detach it from your wrist.

17. Close the cabinet door.

Unit Repair

18. Complete the Repair Traveler Note and attach it to the unit suspected to be faulty.

19. Pack the unit in the packing material from the new unit and return it to your local service center.

Plant Specification update

20. Update the *Plant Specification* in the *Site Installation Documentation* concerning the new unit: use the comments field to note the date of hardware replacement and new R-state.

6.10 Environmental Control Unit (ECU) Replacement

Unit Removal

Warning!

The following procedure will disable the RBS 884 Micro (1900 MHz). The unit will be out of service during the procedure. Contact the MSC before performing the following procedure.

1. Get permission from the MSC to replace the unit.
2. Open the cabinet door as described in the steps beginning with Step 1 on page 5-7.
3.

Warning!

A unit must never be replaced with another with a lower R-state number.

Check that the hardware replacement unit is the same type as the unit to be replaced, and that it has the same or higher R-state number.

4. Refer to Figure 5-17 on page 5-39)

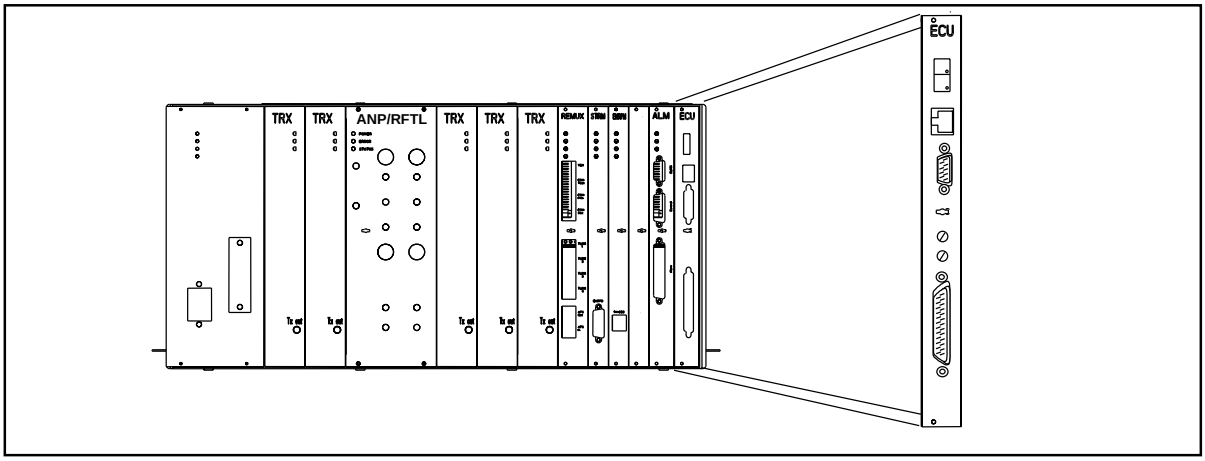

Figure 5-17. Environmental Control Unit (ECU)

5. Attach the ESD strap to your wrist and connect the free end of the strap cable to an appropriate ground conductor in the cabinet.

6. Turn off the ECU circuit breaker.

7. Make a note of the cables connected to the unit.

8. Disconnect the cables from the unit.

9. Use the torque wrench with the Torx bit TX10 to loosen the screws on the front of the unit.

10. Pull out the unit, using the extractor tool, and place it in an ESD bag. If required, remove the handle of the extractor tool. Save the extractor hole plug. Replace the plug after installing or replacing unit.

Unit Hardware Replacement

11. Remove the hardware replacement unit from its ESD bag.

12. Carefully slide the replacement unit into the cabinet in place of the old unit. Push the unit firmly into the backplane connector.

13. Use the torque wrench with the Torx bit TX10 to tighten the screws on the front.

    Turn the torque wrench until it slides to tighten to 0.6 Nm.

14. Connect the cables that were disconnected earlier.

15. Turn on the ECU circuit breaker.

16. After fan test is complete, verify the decimal points located in the two digit display are illuminated. If not, refer to the *troubleshooting* procedure in Section 4 on page 5-6 for detection of units suspected to be faulty.

17. Remove the ESD strap cable from the cabinet, and detach it from your wrist.

18. Close the cabinet door.

Unit Repair

19. Complete the Repair Traveler Note and attach it to the unit suspected to be faulty.

20. Pack the unit in the packing material from the new unit and return it to your local service center.

Plant Specification update

21. Update the *Plant Specification* in the *Site Installation Documentation* concerning the new unit: use the comments field to note the date of hardware replacement, and new R-state.

6.11 Fan Replacement

Unit Removal

1. Get permission from the MSC to replace the unit.

2. Open the cabinet door as described in the steps beginning with Step 1 on page 5-7.

3. Pull out the two plungers in the top cap and lift cap up until the top brace limits travel. Lower cap slightly while pushing the support brace towards the rear of the cabinet. Ensure the support brace engages the mating bracket

4. Identify the failed fan unit.

5.

Warning!

A unit must never be replaced with another with a lower R-state number.

Check that the hardware replacement unit is the same type as the unit to be replaced, and that it has the same or higher R-state number.

6.

Warning!

The remaining steps in this procedure must be performed as quickly as possible in order to avoid overheating the cabinet.

Disconnect the cable from the unit.

7. Inform the MSC that the unit has been replaced, so that they can perform a test.

8. Disconnect the three-wire connector. See Figure 5-18 on page 5-41.

9. Disconnect the two-wire connector.

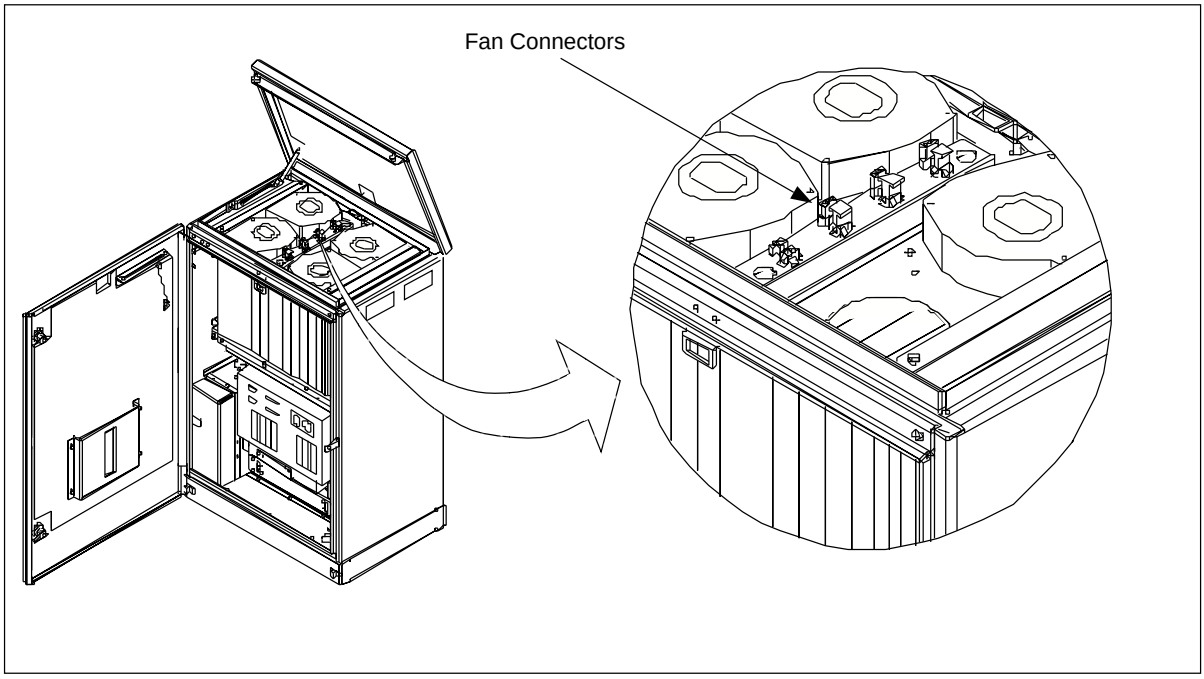

Figure 5-18. The Fan Unit

10. Remove the tie wraps securing the fan wiring.

11. Remove the three screws that secure the fan unit to the cabinet frame.

12. Remove the fan unit.

Unit Hardware Replacement

13. Remove the replacement fan unit.

14. Install new fan unit and replace three mounting screws.

15. Replace tie wraps if required.

16. Reconnect the two-wire fan connector.

17. Reconnect the three-wire fan connector.

18. Cycle the fan breaker (turn off and turn on) to reset the fan alarm. The fan start-up sequence will be initiated.

19. If the new fan does not start, refer to the troubleshooting procedure in Section 4 on page 5-6 for detection of units suspected to be faulty.

20. Close the top cap by disengaging the support brace. Press down firmly on the top cap until the two plungers engage the slots on the cabinet.

    Note: Press the plungers toward rear of cabinet to ensure proper plunger seating.

21. Close the cabinet door.

22. Inform the MSC that the unit has been replaced.

Unit Repair

23. Complete the Repair Traveler Note and attach it to the unit suspected to be faulty.

24. Pack the unit in the packing material from the new unit and return it to your local service center.

Plant Specification update

25. Update the *Plant Specification* in the *Site Installation Documentation* concerning the new unit: use the comments field to note the date of hardware replacement and new R-state.

6.12 Main Heater Replacement

Warning!

The following procedure will disable the RBS 884 Micro (1900 MHz). The unit will be out of service during the procedure. Contact the MSC before performing the following procedure.

Unit Removal

1. Get permission from the MSC to replace the unit.

2. Open the cabinet door as described in the steps beginning with Step 1 on page 5-7.

3. Place the **MAIN HTR** circuit breaker on the right side of the AC/DC Distribution Box in the OFF position. See Figure 5-19 on page 5-43

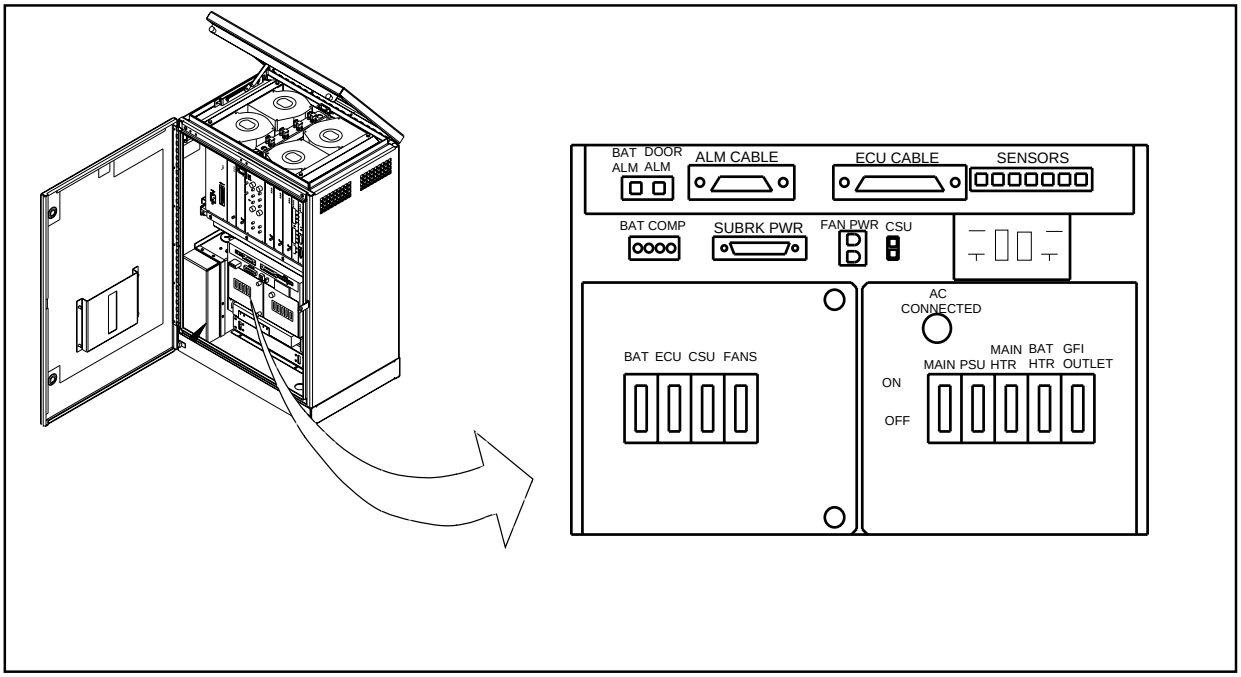

Figure 5-19. AC/DC Distribution Box

4. Locate the Main Heater Assembly. See Figure 5-20 on page 5-43.

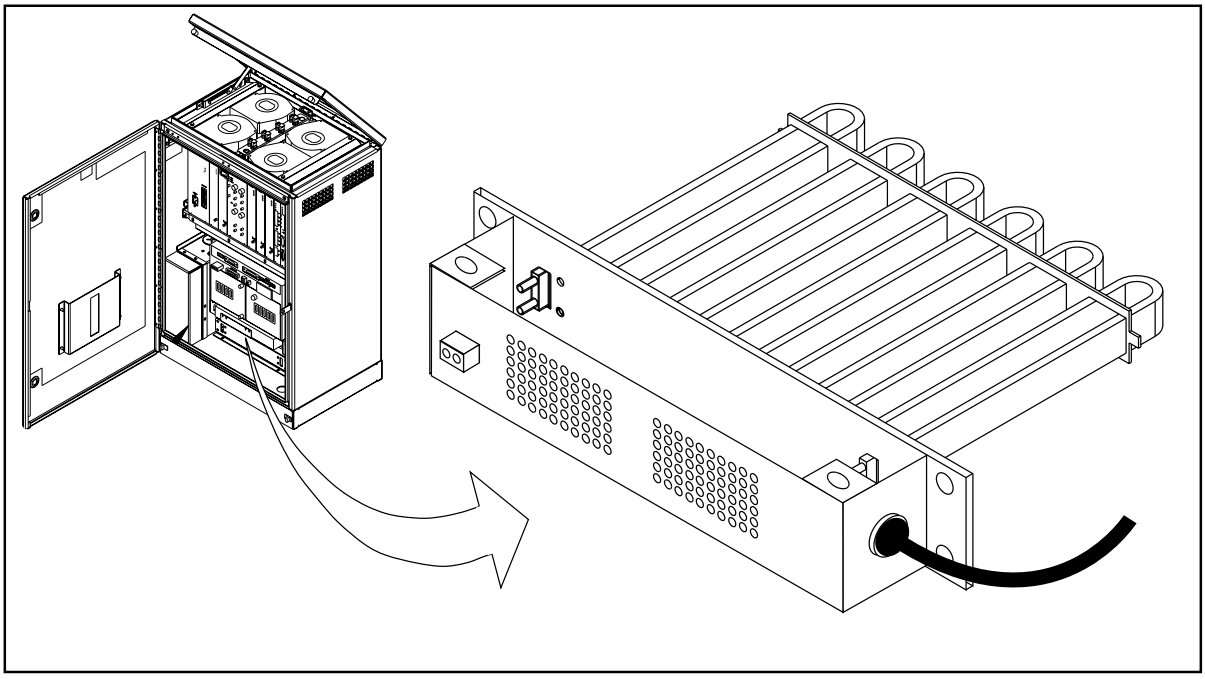

Figure 5-20. Subrack Heater

5. Check that the heater assembly is the same type as the unit to be replaced.

6. Unplug the heater control wires from the front of the heater assembly.

7. Remove the two screws located on the top of the perforated heater assembly cover. Remove the cover and retain for installation on replacement unit.

8. Remove the mounting screws located on each side of the heater assembly (two per side). Pull the heater assembly out four to six centimeters.

9.

Warning!

Use a voltmeter to verify the unit is NOT energized. Do not assume power is OFF.

Locate the heater power cable on the right side of the heater assembly. Follow cable into the heater assembly and locate the black, white, and green power wires.

Note: If required, remove any ties or clamps securing power wires.

10. Disconnect the black, white, and green power wires. If needed, record wire position and connections.

11. Remove the strain relief and remove the power cable from the heater assembly. Remove heater assembly from cabinet.

Unit Hardware Replacement

12. Remove the replacement unit from any packing material.

13. Remove the two screws located on the top of the perforated heater assembly cover. Remove the cover.

14. Insert new replacement heater assembly approximately eight to ten centimeters into cabinet opening.

15. Insert power cable through right side of heater assembly.

16. Reconnect the black, white, and green power wires. The black wire connects to the solid-state relay terminal (2). The white wire connects to 1L1 and 1L2 with a wire nut. The green wire connects to the heater assembly ground.

17. Replace the top cover and secure with two screws.

18. Insert the heater assembly all the way into the cabinet opening and replace the mounting screws (two per side).

19. Reconnect the heater control wires to front of heater assembly.

20. Place the **MAIN HTR** circuit breaker on the right side of the AC/DC Distribution Box in the ON position.

21. Close the cabinet door.

22. Inform the MSC that the unit has been replaced.

Unit Repair

23. Complete the Repair Traveler Note and attach it to the unit suspected to be faulty.

24. Pack the unit in the packing material from the new unit and return it to your local service center.

Plant Specification update

25. Update the *Plant Specification* in the *Site Installation Documentation* concerning the new unit: use the comments field to note the date of hardware replacement and new R-state.

6.13 Battery Heater Replacement

Unit Removal

1. Get permission from the MSC to replace the unit.

2. Open the cabinet door as described in the steps beginning with Step 1 on page 5-7.

3. Place the **BAT** circuit breaker on the left side of the AC/DC Distribution Box in the OFF position.

4. Place the **BAT HTR** circuit breaker on the right side of the AC/DC Distribution Box in the OFF position. See Figure 5-21 on page 5-46

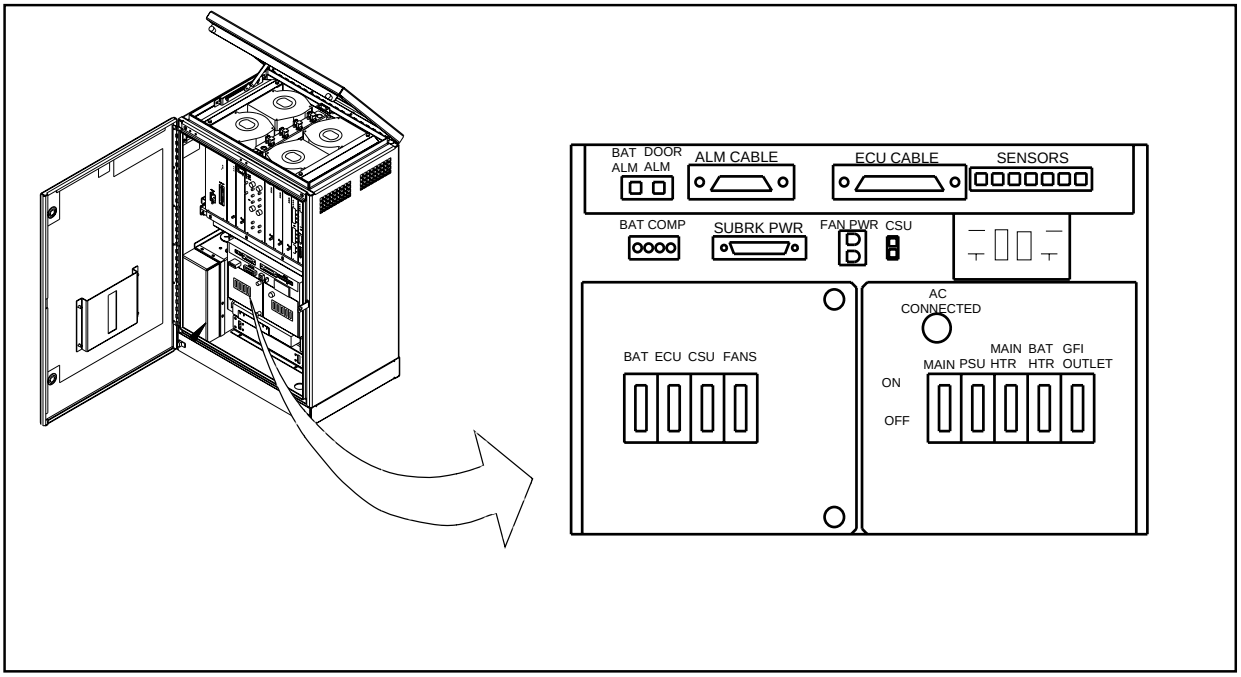

Figure 5-21. AC/DC Distribution Box

5. Locate the battery compartment. The battery heater is under the battery tray. See Figure 5-22 on page 5-46.

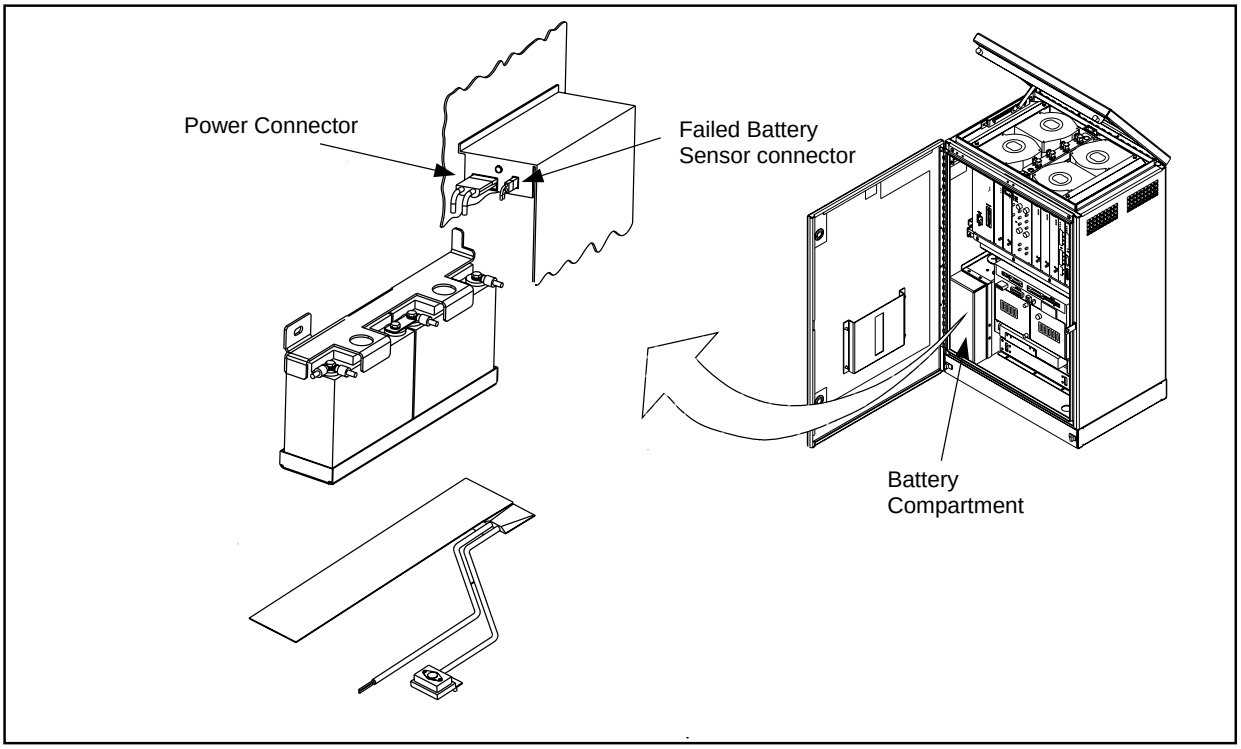

Figure 5-22. Location of Battery Heater

6. Remove the four screws from the battery cover and remove the cover from the battery compartment.

7. Disconnect the Failed Battery Sensor connector.

8. Disconnect the power connector of the battery cable assembly from the connector at the top of the battery compartment.

9. Remove the hex nut on the hold-down bracket on the side wall of the battery compartment. Remove the hold down bracket.

10. Remove the battery tray with the batteries from the battery compartment.

11. Locate the battery compartment. The battery heater is under the battery tray. See Figure 5-25 on page 5-50.

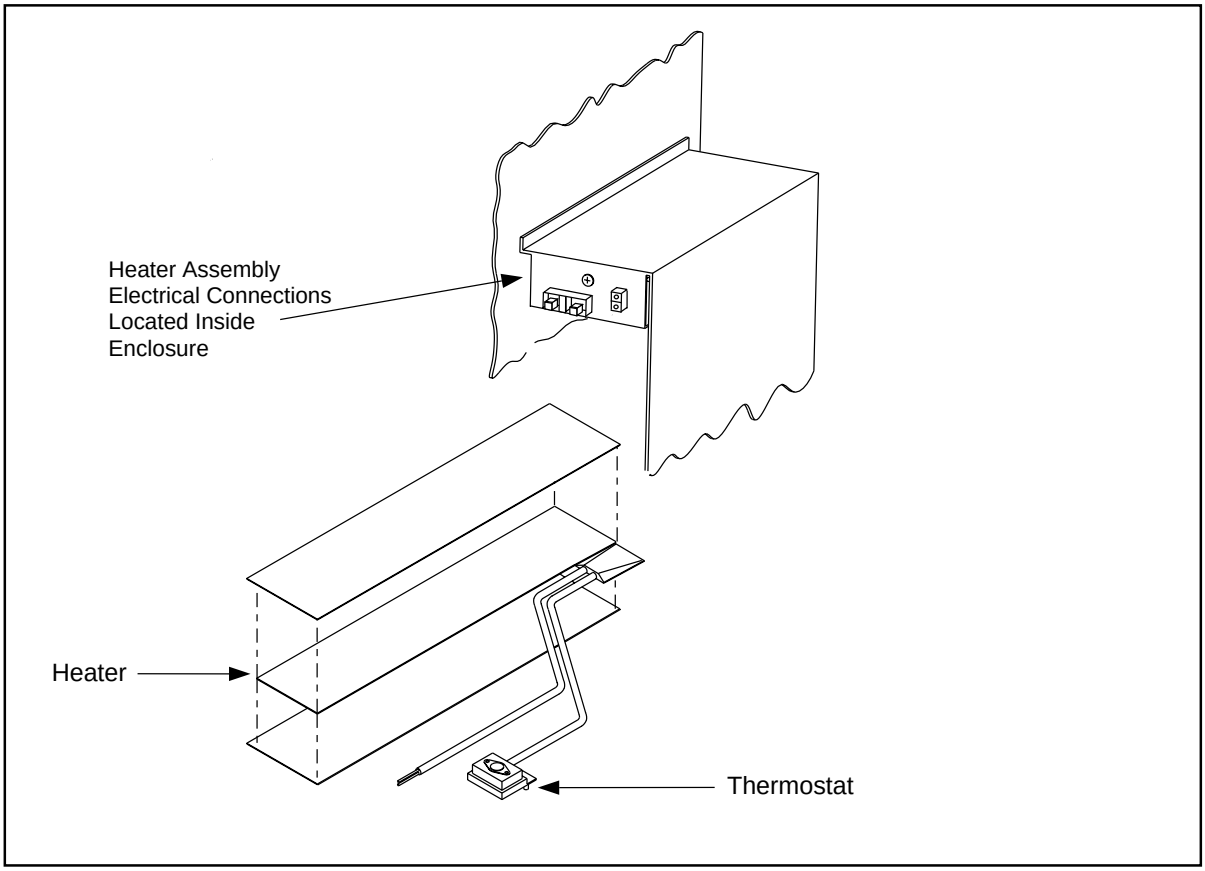

Figure 5-23. Battery Heater Assembly

12. Remove the screw on the front of the wiring enclosure located above the battery compartment. Support the enclosure.

13. Pull the enclosure down and locate the two screws securing the battery heater thermostat to bottom of enclosure.

14. Remove the thermostat nuts and thermostat.

15. Remove the two heater power wires from the terminal strip inside the enclosure. Remove the strain relief and pull the wires through the bottom of the enclosure.

16. Remove the heater assembly from the cabinet.

Unit Hardware Replacement

17. Remove any packing material from the replacement heater assembly.

18. Push two heater power wires through strain relief and bottom of enclosure. Connect wires to terminal strip.

19. Secure thermostat to bottom of enclosure with two screws removed previously.

20. Raise enclosure and slide pins into holes. Secure enclosure to top of battery compartment with screw removed previously.

21. Install the battery tray.

22. Install the hold-down bracket and the hex nut on the side wall of the battery compartment.

23. Reconnect the power connector of the battery cable assembly to the connector at the top of the battery compartment.

24. Reconnect the Failed Battery Sensor connector.

25. Install the battery compartment cover with the four screws removed previously.

26. Place the **BAT** circuit breaker on the left side of the AC/DC Distribution Box in the ON position.

27. Place the **BAT HTR** circuit breaker on the right side of the AC/DC Distribution Box in the ON position.

28. Close the cabinet door.

29. Inform the MSC that the unit has been replaced.

Unit Repair

30. Complete the Repair Traveler Note and attach it to the unit suspected to be faulty.

31. Pack the unit in the packing material from the new unit and return it to your local service center.

Plant Specification update

32. Update the *Plant Specification* in the *Site Installation Documentation* concerning the new unit: use the comments field to note the date of hardware replacement, and new R-state.

6.14 Battery Replacement

Unit Removal

1. Get permission from the MSC to replace the unit.

2. Open the cabinet door as described in the steps beginning with Step 1 on page 5-7.

3. Place the **BAT** circuit breaker on the left side of the AC/DC Distribution Box in the OFF position. See Figure 5-24 on page 5-49

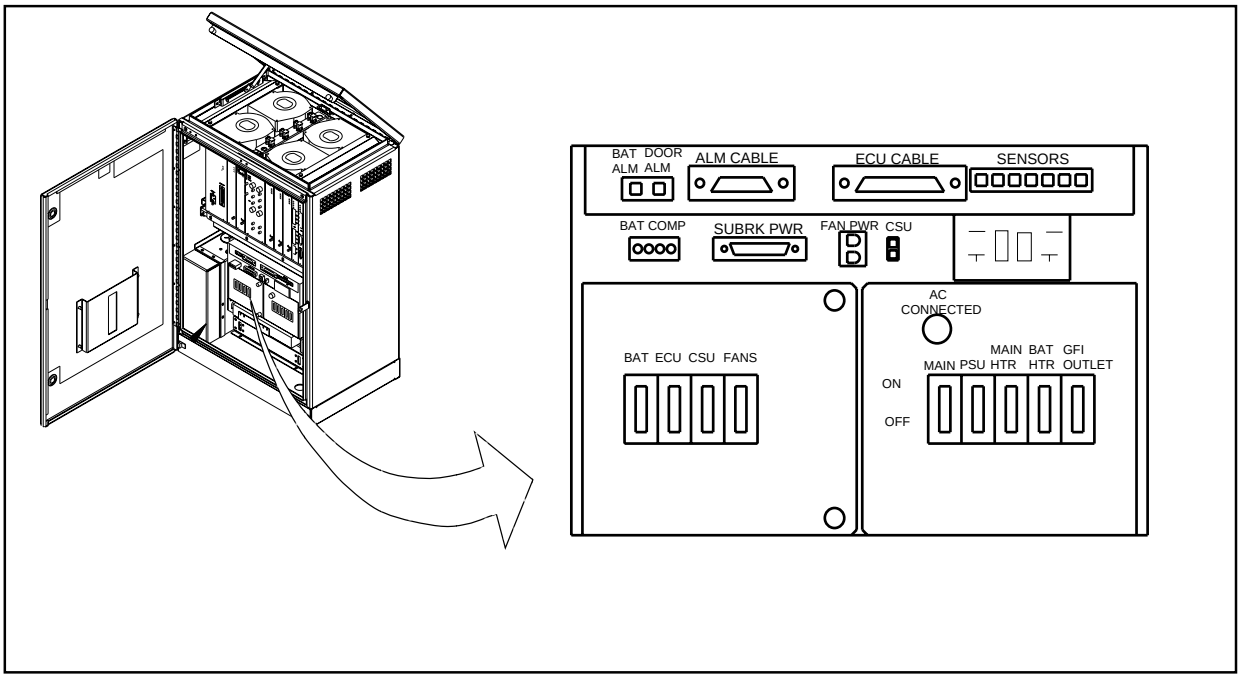

Figure 5-24. AC/DC Distribution Box

4. Locate the battery compartment. See Figure 5-25 on page 5-50.

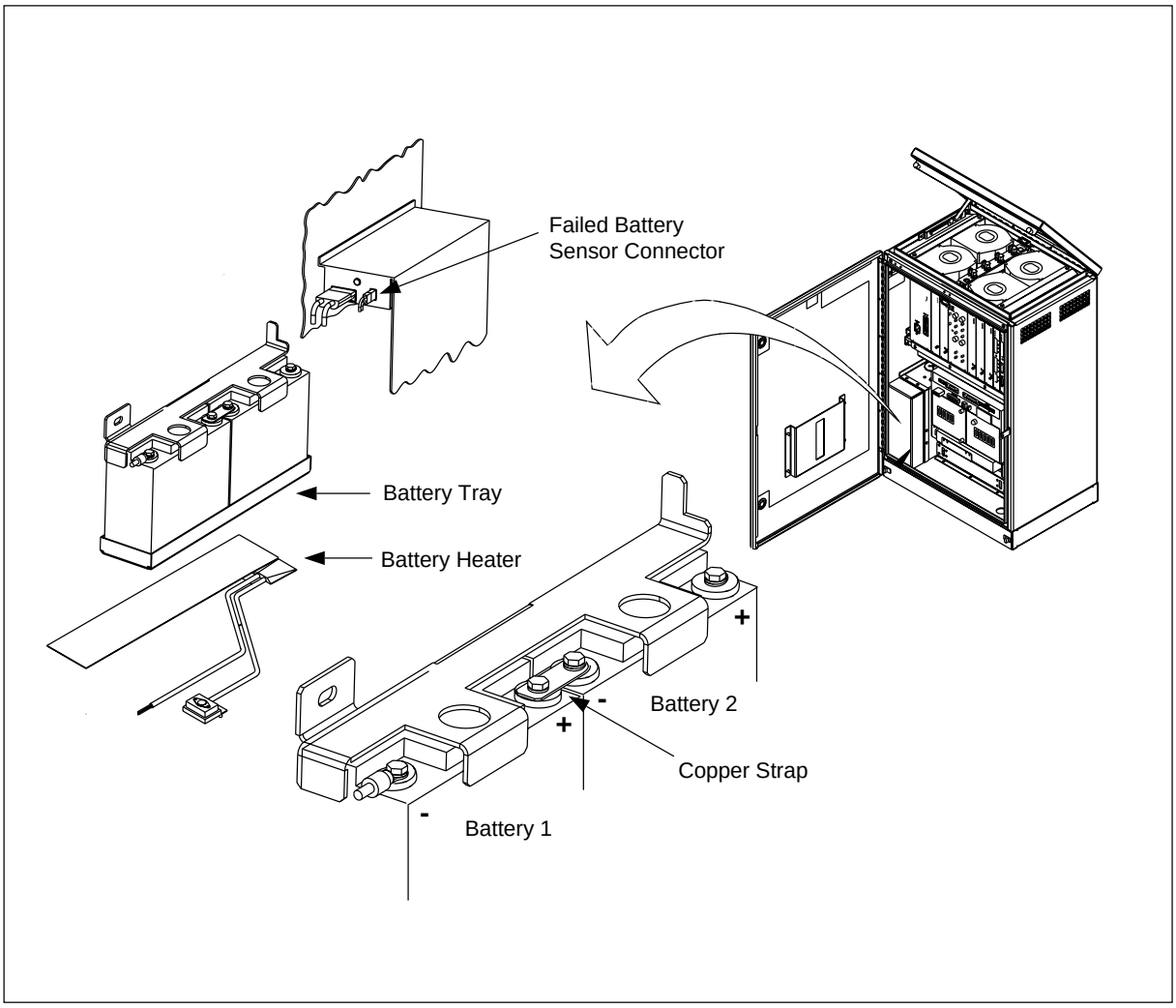

Figure 5-25. Battery Assembly

5. Remove the four hex head screws from the battery cover and remove the cover from the battery compartment.

6. Disconnect the Failed Battery Sensor connector.

7. Disconnect the power connector of the battery cable assembly from the connector at the top of the battery compartment.

8. Remove the hex nut on the hold-down bracket on the side wall of the battery compartment. Remove the hold down bracket.

9. Remove the battery tray with the batteries from the battery compartment.

10. Disconnect one of the 18-gauge white wires labeled POST from the negative terminal of battery 1. Disconnect the other 18-gauge white wire from the negative terminal of battery 2.

11. Disconnect the 8-gauge black cable from the negative terminal (-) of battery 1.

12. Disconnect the 8-gauge red cable from the positive terminal (+) of battery 2.

13. Remove the copper strap connecting the center terminals (positive terminal of battery 1 to negative terminal of battery 2).

14. Remove the batteries from the battery tray.

15. Dispose of old batteries properly.

Unit Hardware Replacement

16. Remove the replacement batteries from the packing material.

17. Install the batteries into the battery tray as illustrated in Figure 5-25 on page 5-50. Place the hold-down bracket on the batteries.

18. Connect the center terminals (positive terminal of battery 1 to negative terminal of battery 2) with the copper strap. Do not tighten the negative terminal of battery 2 at this time.

19. Connect the 8-gauge black cable to the negative terminal (-) of battery 1.

20. Connect the 8-gauge red cable to the positive terminal (+) of battery 2.

    Note: Ensure the terminals are placed inward, toward the back of the battery. Torque all bolts to 50 in-lbs.

21. Connect one of the 18-gauge white wires labeled POST to the negative terminal of battery 1. Connect the other 18-gauge white wire to the negative terminal of battery 2.

22. Install the battery tray with the batteries in the battery compartment. Make sure the battery cable assembly is not pinched against the battery compartment.

23. Place the hold-down bracket over the screw on the side wall of the battery compartment. Secure with a hex nut.

24. Connect the power connector of the battery cable assembly to the connector at the top of the battery compartment.

25. Connect the Failed Battery Sensor connector.

26. Install the battery cover on the battery compartment with the four hex head screws.

27. Place the **BATT** circuit breaker on the left side of the AC/DC Distribution Box in the ON position.

Plant Specification update

28. Update the *Plant Specification* in the *Site Installation Documentation* concerning the new unit: use the comments field to note the date of hardware replacement and new R-state.

6.15 AC Surge Suppressor Replacement

Unit Removal

Warning!

The following procedure will disable the RBS 884 Micro (1900 MHz). The unit will be out of service during the procedure. Contact the MSC before performing the following procedure.

1. Get permission from the MSC to replace the unit.
2. Open the cabinet door as described in the steps beginning with Step 1 on page 5-7.
3. Disconnect all power to the RBS 884 Micro (1900 MHz) cabinet.
4. **Warning!**

   Verify all power is removed from cabinet. Verify the AC CONNECTED indicator light is off.

   Place the **MAIN** circuit breaker on the right side of the AC/DC Distribution Box in the OFF position. See Figure 5-26 on page 5-53

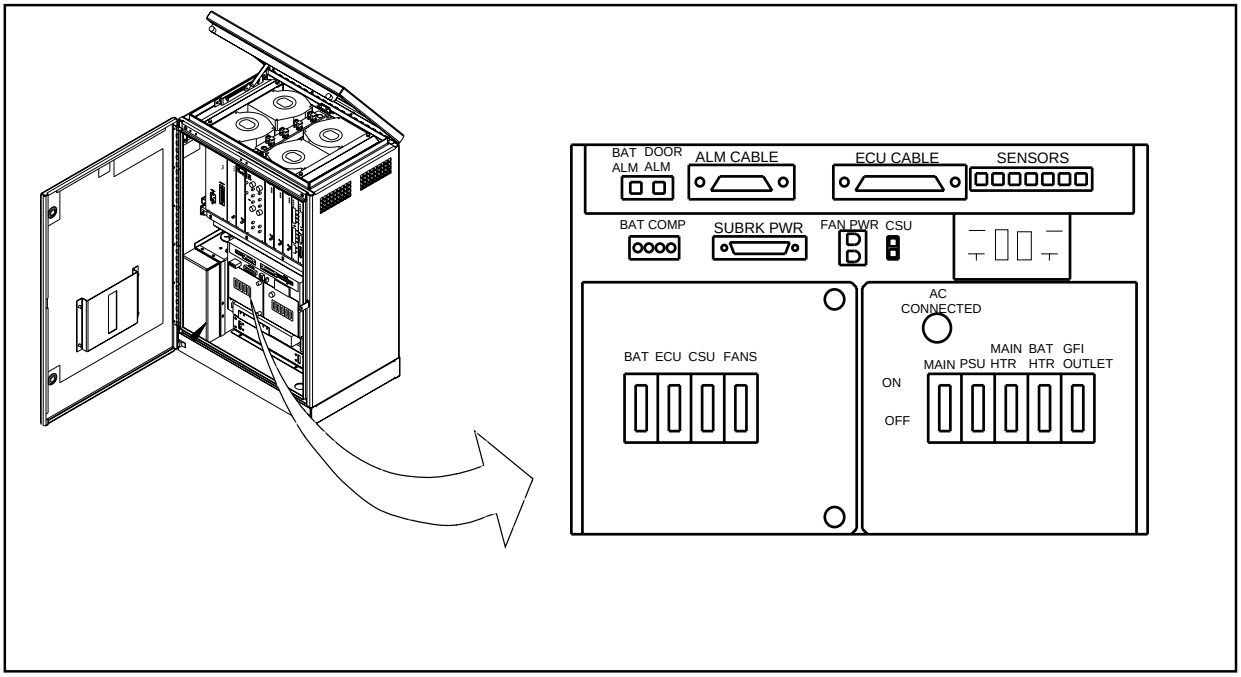

Figure 5-26. AC/DC Distribution Box

5. Open the front of the AC/DC Distribution Box and locate the AC Surge Suppressor on back wall. See Figure 5-27 on page 5-53.

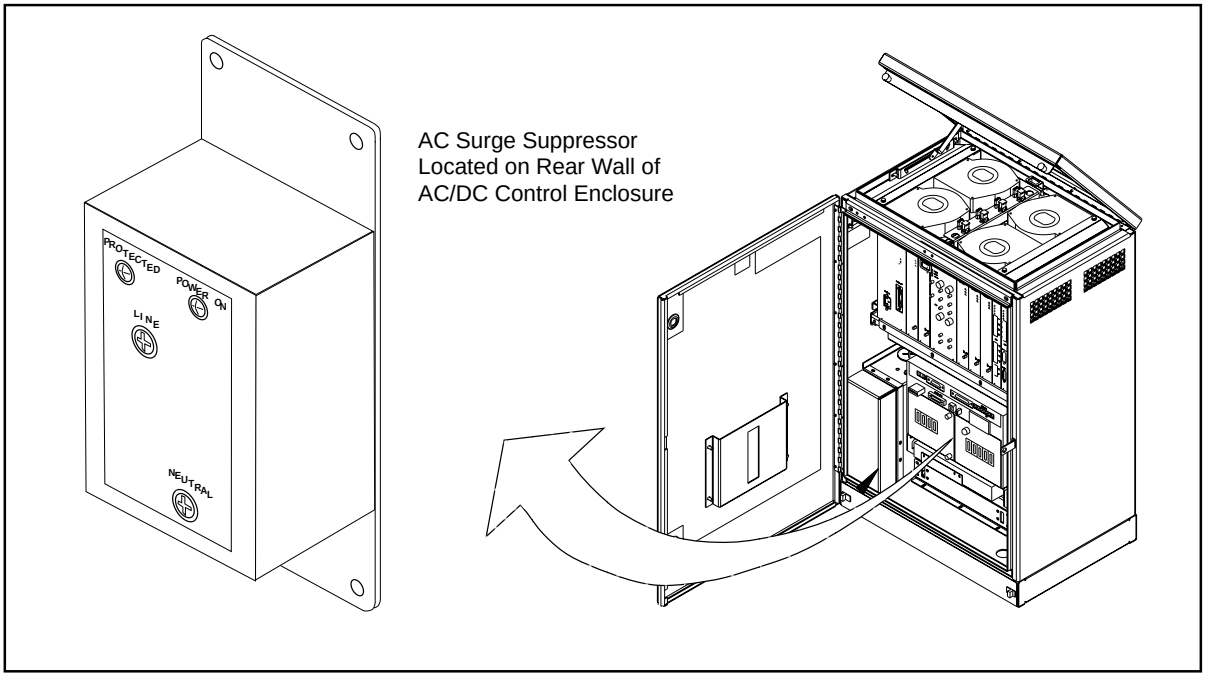

Figure 5-27. AC Surge Suppressor Assembly

6. Verify the LEDs on front of surge suppressor are off.

7. Disconnect the LINE and NEUTRAL wires from the front of the surge suppressor.

8. Remove the nuts securing the surge suppressor to rear wall. Remove the surge suppressor.

Unit Hardware Replacement

9. Remove any packing material from the replacement unit.

10. Install new surge suppressor to rear wall of AC/DC Distribution Box using nuts removed previously.

11. Reconnect the LINE and NEUTRAL wires to the front of the surge suppressor.

12. Place the **MAIN** circuit breaker on the right side of the AC/DC Distribution Box in the ON position.

13. Verify the LEDs on front of surge suppressor are on.

14. Close the AC/DC Distribution Box.

15. Close the cabinet door.

16. Inform the MSC that the unit has been replaced.

Unit Repair

17. Complete the Repair Traveler Note and attach it to the unit suspected to be faulty.

18. Pack the unit in the packing material from the new unit and return it to your local service center.

Plant Specification update

19. Update the *Plant Specification* in the *Site Installation Documentation* concerning the new unit: use the comments field to note the date of hardware replacement, and new R-state.

6.16 T1(E1) PCM Primary Surge Suppressor Replacement

Unit Removal

Warning!

The following procedure will disable the RBS 884 Micro (1900 MHz). The unit will be out of service during the procedure. Contact the MSC before performing the following procedure.

1. Get permission from the MSC to replace the unit.
2. Open the cabinet door as described in the steps beginning with Step 1 on page 5-7.
3. Locate the Primary Surge Suppressor on the right inside wall of cabinet.
4. See Figure 5-28 on page 5-55.

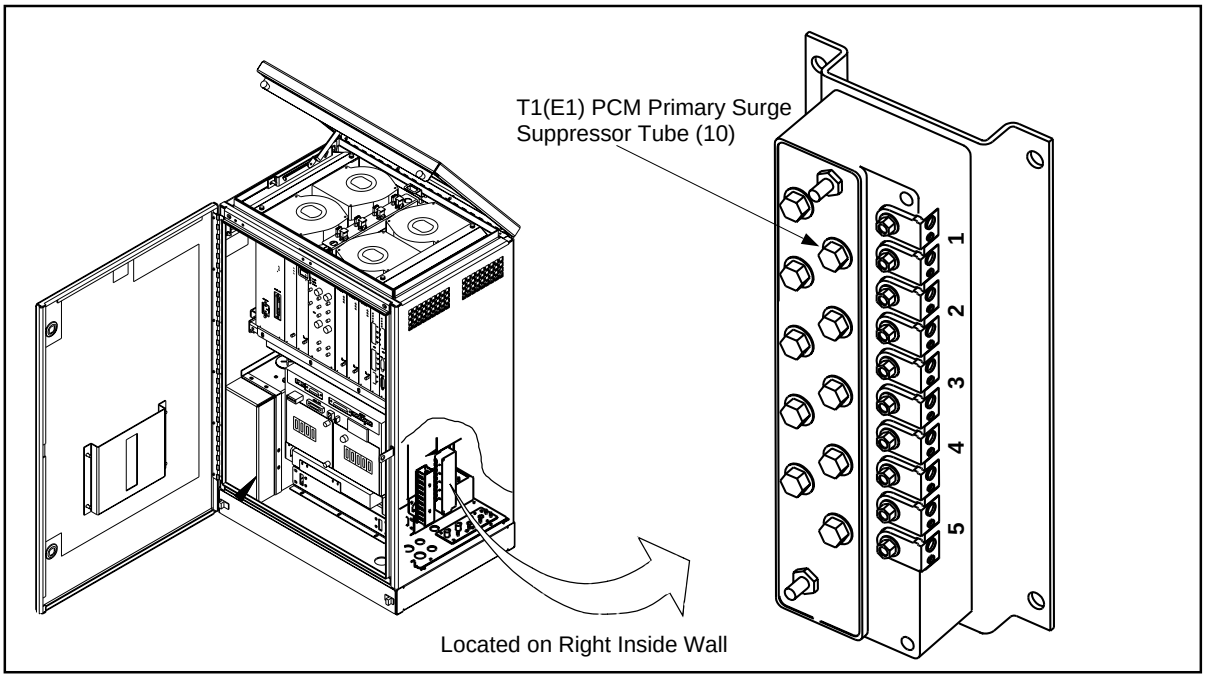

Figure 5-28. T1(E1) Primary Surge Suppressor

5. Remove the T1(E1) connections from the surge suppressor.
6. Remove the four nuts securing the surge suppressor to the cabinet. remove the unit from the cabinet.

Unit Hardware Replacement

7. Remove the replacement unit.
8. Install the replacement unit in the cabinet and replace the four nuts.
9. Reattach the T1 (E1) connections.
10. Close the cabinet door.
11. Inform the MSC that the unit has been replaced.

Unit Repair

12. Complete the Repair Traveler Note and attach it to the unit suspected to be faulty.
13. Pack the unit in the packing material from the new unit and return it to your local service center.

Plant Specification update

14. Update the *Plant Specification* in the *Site Installation Documentation* concerning the new unit: use the comments field to note the date of hardware replacement, and new R-state.

6.17 T1(E1) PCM Secondary Surge Suppressor Replacement

Unit Removal

Warning!

The following procedure will disable the RBS 884 Micro (1900 MHz). The unit will be out of service during the procedure. Contact the MSC before performing the following procedure.

1. Get permission from the MSC to replace the unit.
2. Open the cabinet door as described in the steps beginning with Step 1 on page 5-7.
3. Locate the T1(E1) PCM Secondary Surge Suppressor. See Figure 5-29 on page 5-57.

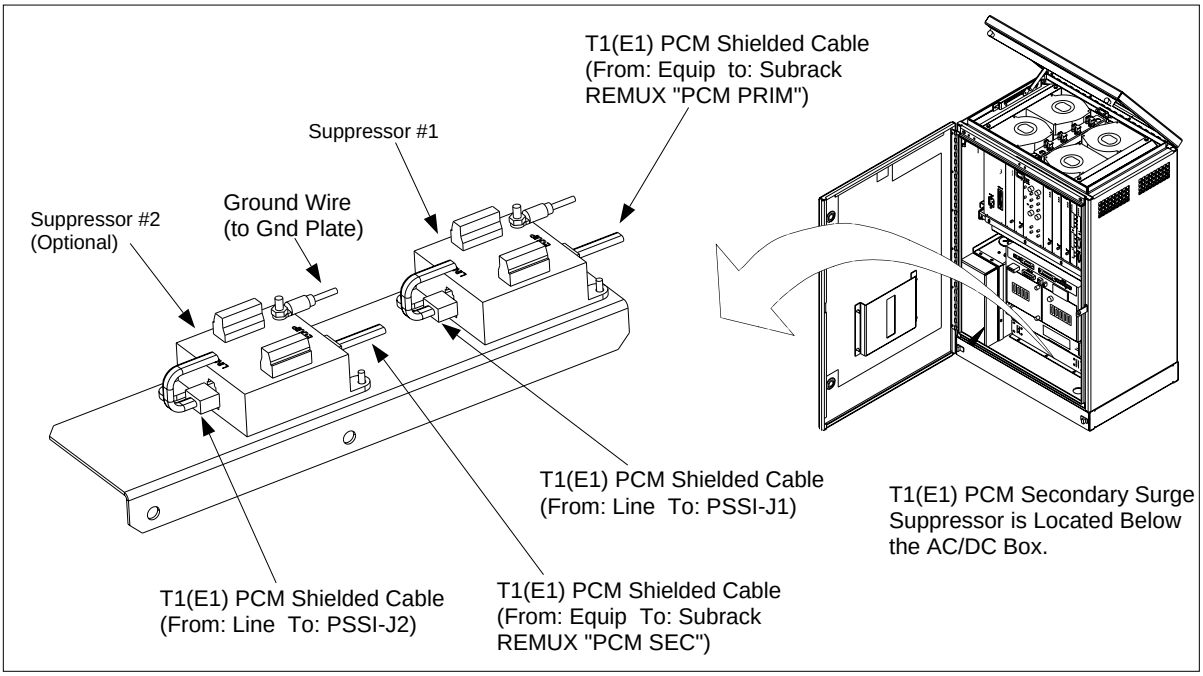

Figure 5-29. T1(E1) PCM Secondary Surge Suppressor Assembly

4. Remove the T1(E1) PCM shielded cables from the surge suppressor to be replaced. Record position of cables if required.

5. Remove the ground wire.

6. Remove the two mounting screws (or nuts) and remove unit from the cabinet.

Unit Hardware Replacement

7. Install replacement unit in cabinet and replace two mounting screws.

8. Reattach T1(E1) cables and ground wire.

9. Close the cabinet door.

10. Inform the MSC that the unit has been replaced.

Unit Repair

11. Complete the Repair Traveler Note and attach it to the unit suspected to be faulty.

12. Pack the unit in the packing material from the new unit and return it to your local service center.

Plant Specification update

13. Update the *Plant Specification* in the *Site Installation Documentation* concerning the new unit: use the comments field to note the date of hardware replacement, and new R-state.

6.18 Air Filter Replacement

Unit Removal

1. Get permission from the MSC to replace the unit.

2. Open the cabinet door as described in the steps beginning with Step 1 on page 5-7.

3. See Figure 5-30 on page 5-58.

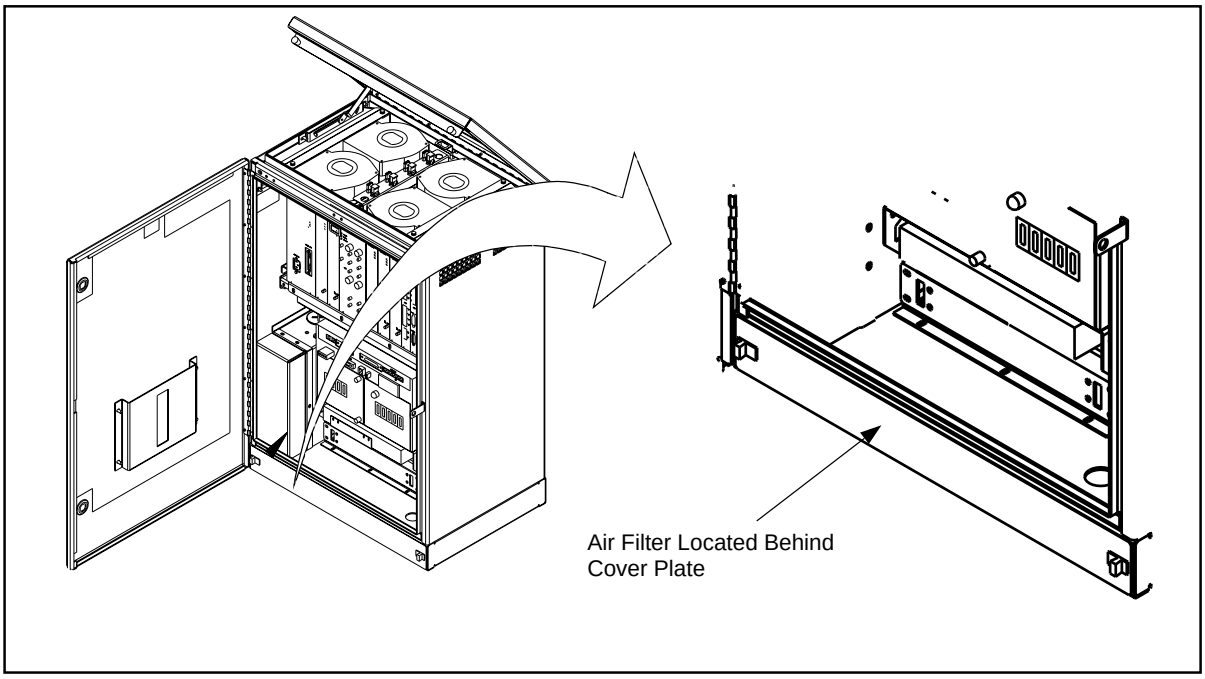

Figure 5-30. Air Filter Location

4. Locate the lower air filter cover.

5. If equipped with slide latches, grasp the slide latches and move outward. If equipped with screws, remove the screws. Remove the cover and set aside.

6. Locate the air filter and slide outward.

   Note: Use care when removing air filter. Ensure that no dust or debris from the air filter enters the cabinet.

7. Dispose of the old air filter properly.

Unit Hardware Replacement

8. Remove the replacement unit and note air flow directional arrows on side of filter.

9. Install the new air filter with directional air flow arrows pointed up.

10. Replace front cover and slide latches inward to secure cover.

11. Close the cabinet door.

12. Inform the MSC that the unit has been replaced.

Plant Specification update

13. Update the *Plant Specification* in the *Site Installation Documentation* concerning the new unit: use the comments field to note the date of hardware replacement, and new R-state.

Part 6

Glossary of Terms

Auxiliary Cabinet	Any extra RBS cabinet besides the main RBS cabinet. It is connected to the main cabinet (no direct connection with the MSC).
Cascading	Connecting another radio base station to a first one, thus using a common PCM line to the MSC.
Dummy TRX	A blank panel with an empty box behind, to be placed in unused TRX positions to ensure proper cooling and EMC shielding.
E1 Connection	The European standard for 2.048 Mbit/s PCM connections, carrying 32 independent 64 kbit/s channels (DS0s) numbered 0–31.
Main Cabinet	The Main Cabinet is directly connected to an MSC by a PCM link. The cabinet always has an antenna system.
Mobile Switching Center	The Mobile Switching Center handles all connections and disconnections of calls to a mobile station (MS) and serves as the interface between the mobile network and the Public Switched Telephone Network (PSTN).
Primary Cabinet	The Primary Cabinet is used to create an additional sector within an omni cell.
T1 Connection	The American standard for 1.544 Mbit/s PCM connections carrying 24 independent 64 kbit/s channels (DS0s) numbered 1–24.

Part 7

Acronyms and Abbreviations

AC	Alternating Current
ALM	Alarm
ANP	Antenna Near Part
B8ZS	Bit 8 Zero Substitute
CLC	Control signaling Link
CONN	Connection Board
CRC	Cyclic Redundancy Check
DS0	Digital Signal Level 0
DVER	Digital Verification module
EMC	Electromagnetic Compatibility
EMRP	Extension Module Regional Processor
EMRPM	EMRP for Micro Base
ESD	Electrostatic Discharge
FCC	Federal Communications Commission
LED	Light Emitting Diode
MC	Multi Coupler
MCPA	Multi Carrier Power Amplifier
MSC	Mobile Switching Center
PCB	Printed Circuit Board
PCM	Pulse Code Modulation
PSU	Power Supply
RBS	Radio Base Station
REMUX	Remote Multiplexor: Interfacing Board for the RBS
RF	Radio Frequency
RFTL	Radio Frequency Test Loop
RMU	Radio Matching Unit
RX	Receiver
STR	Signaling Terminal Regional
STRM	Signal Terminal Remote
TRX	Transceiver
TS	Time slot
TX	Transmitter

Appendix A

Documentation Overview

1 Introduction A-3

2 RBS 884 Customer Manuals A-3

1 Introduction

This appendix provides an overview of the existing customer manuals for RBS 884, the work procedures covered by the manuals, and the recommended use of the manuals.

2 RBS 884 Customer Manuals

The customer manuals for RBS 884 cover the work procedures for Radio Network Design, Radio Site Engineering, Data Transcript, Installation and Test, Customer System Test, and Maintenance (see Figure A-1 on page A-3).

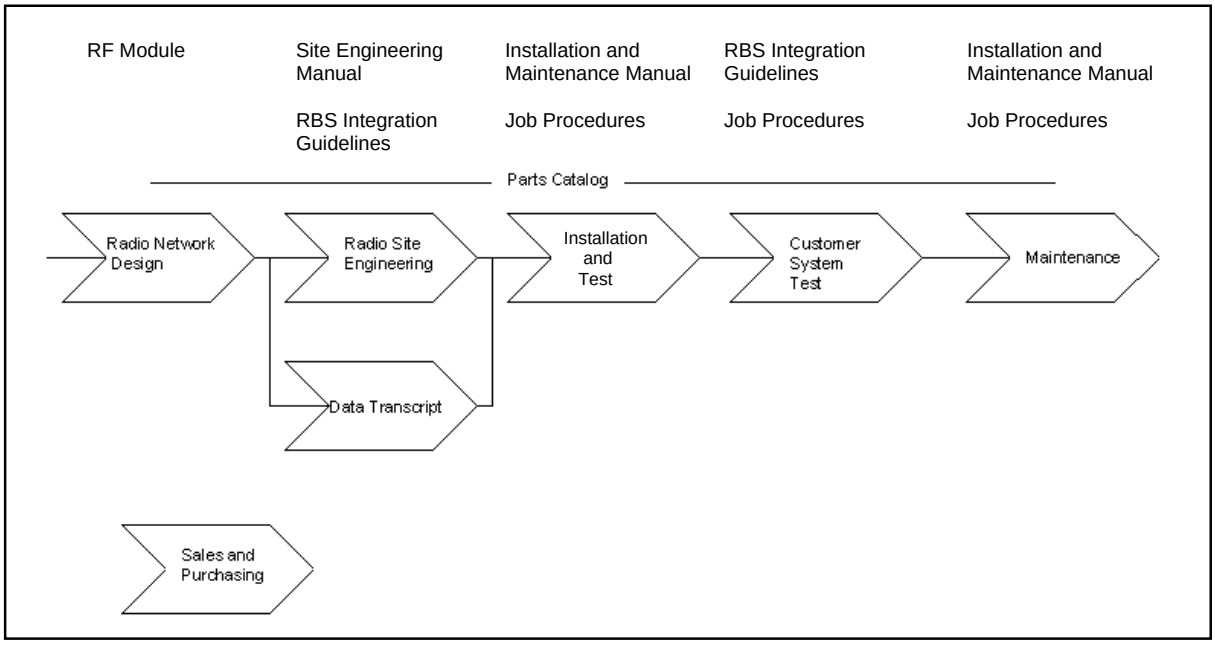

Figure A-1. RBS 884 Customer Manuals Related to Work Procedures

Use the *RF Guidelines and Cell Design Data* to plan and dimension a cellular network based on the Ericsson Cellular Telephone System. Then engineer all the sites using the *Site Engineering Manual*, and create a data transcript using the *RBS Integration Guidelines*.

Install and test the sites using the *Installation Manuals* and the *Job Procedures*. Commission the sites and test the cellular network using the *RBS Integration Guidelines* and *Job Procedures*.

Use the *Job Procedures* during operation and maintenance from the MSC. Use the *Parts Catalog* to identify replacable RBS parts, and use the *Installation Manuals* for RBS hardware replacement and hardware extensions.

Table A-1. RBS 884 Customer Manuals

Customer Manual	Product Number
RF Guidelines and Cell Design Data for AS 100	EN/LZB 119 2614
RF Guidelines and Cell Design Data for AS 123	EN/LZB 119 2614/1
RBS 884 Series Site Engineering Manual	EN/LZB 119 2855
RBS 884 Macro 800 MHz Installation and Maintenance Manual	EN/LZB 119 2170
RBS 884 Macro 1900 MHz Installation and Maintenance Manual	EN/LZB 119 2713
RBS 884 DBC Installation and Maintenance Manual	EN/LZB 119 2856
RBS 884 Micro Installation and Maintenance Manual	EN/LZB 119 2221
RBS 884 Compact Installation and Maintenance Manual	EN/LZB 119 2224
RBS 884 Macro 800 MHz Parts Catalog	EN/LZB 119 2453
RBS 884 Macro 1900 MHz Parts Catalog	EN/LZB 119 2784
RBS 884 DBC Parts Catalog	EN/LZB 119 2857
RBS 884 Micro Parts Catalog	EN/LZB 119 2454
RBS 884 Compact Parts Catalog	EN/LZB 119 2455
RBS 884 Integration Guidelines for AS 100	EN/LZB 119 2786
RBS 884 Integration Guidelines for AS 123	EN/LZB 119 2785

The Job Procedures are listed in the *RBS 884 Integration Guidelines*.

Appendix B

User Feedback

1 Introduction B-3

2 Ordering of Customer Manuals B-3

3 Problem Solving B-3

4 Trouble Reporting B-3

1 Introduction

This appendix provides information on ordering and trouble reporting for the RBS 884 customer manuals.

2 Ordering of Customer Manuals

For ordering of RBS 884 customer manuals, please contact your Ericsson account manager.

3 Problem Solving

If you have any problems with a radio base station in the RBS 884 series that can not be solved by reading the manuals, please contact your nearest Ericsson Technical Assistance Center (TAC).

4 Trouble Reporting

Please report any errors found in this manual to:

Ericsson Radio Systems, AR/SO

S-164 80 Stockholm

Sweden

or

e-mail: erarimpl@memo.ericsson.se

send e-mail as “Mime Compliant” (7–bits)

Appendix C

Internal Cables

1	Introduction	C-3
2	One-Sector Sites	C-3
3	Two-Sector Sites	C-5
4	Three-Sector Sites	C-7
5	Transceivers (TRXs)	C-9

1 Introduction

This appendix describes the internal cabling within each RBS cabinet.

All internal cables are installed at the factory.

The configuration diagrams in this section show cabinets (main, and primary), antenna configurations, and interconnections between cabinets. The cabinets are shown with maximum equipment installed.

2 One-Sector Sites

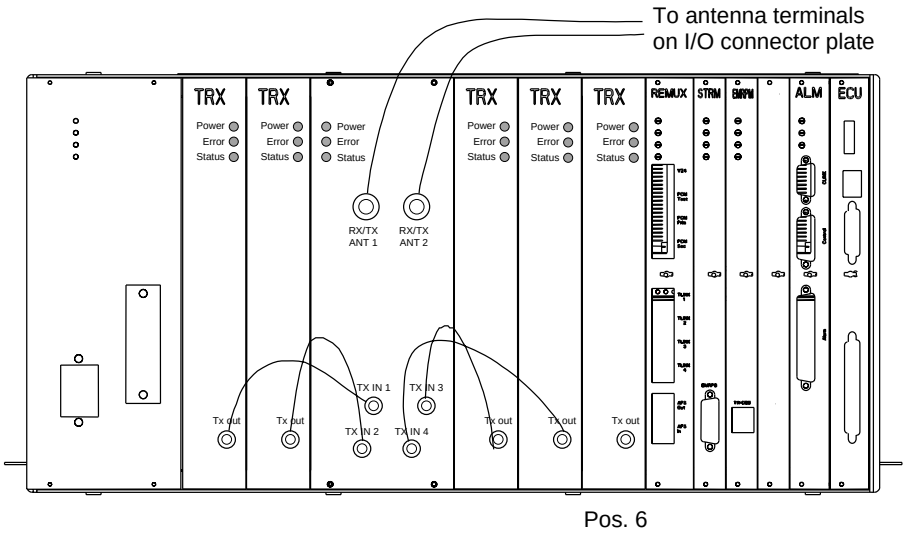

Note: The TRX board in position 6 is used for DVER

Figure C-1. One-Sector Site, One Cabinet, Two Antennas

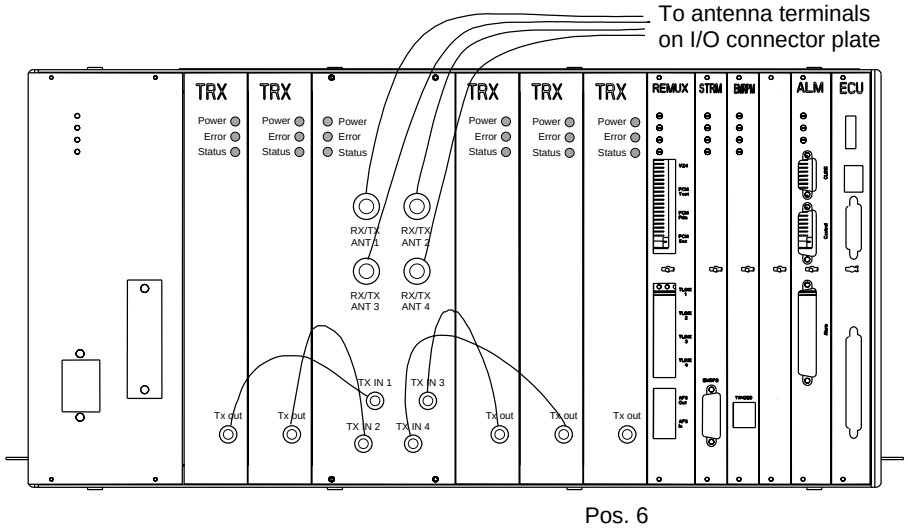

Note: The TRX board in position 6 is used for DVER

Figure C-2. One-Sector Site, One Cabinet, Four Antennas

3 Two-Sector Sites

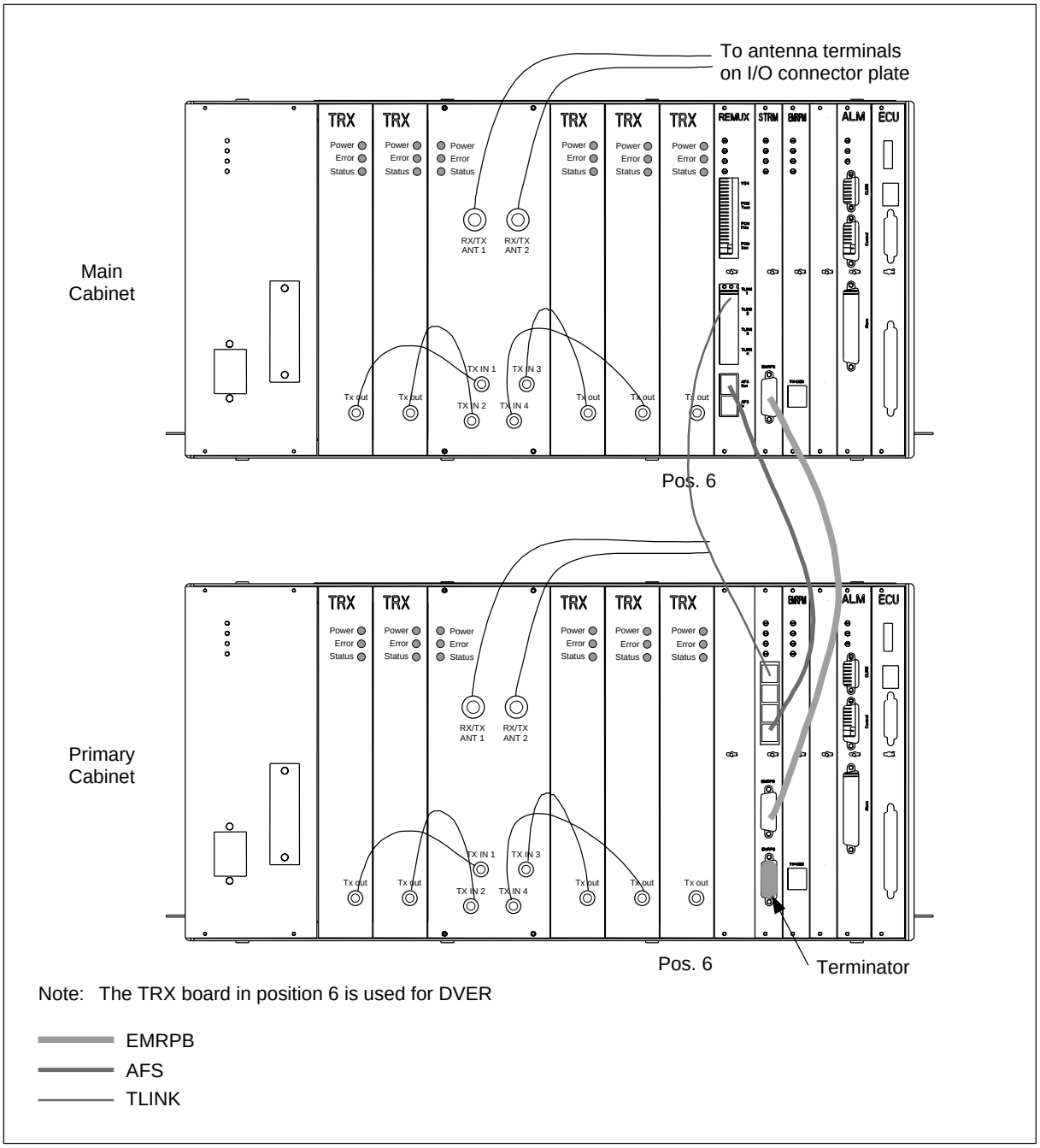

Figure C-3. Two-Sector Site, Two Cabinets, Main and Primary Cabinet have Two Antennas each

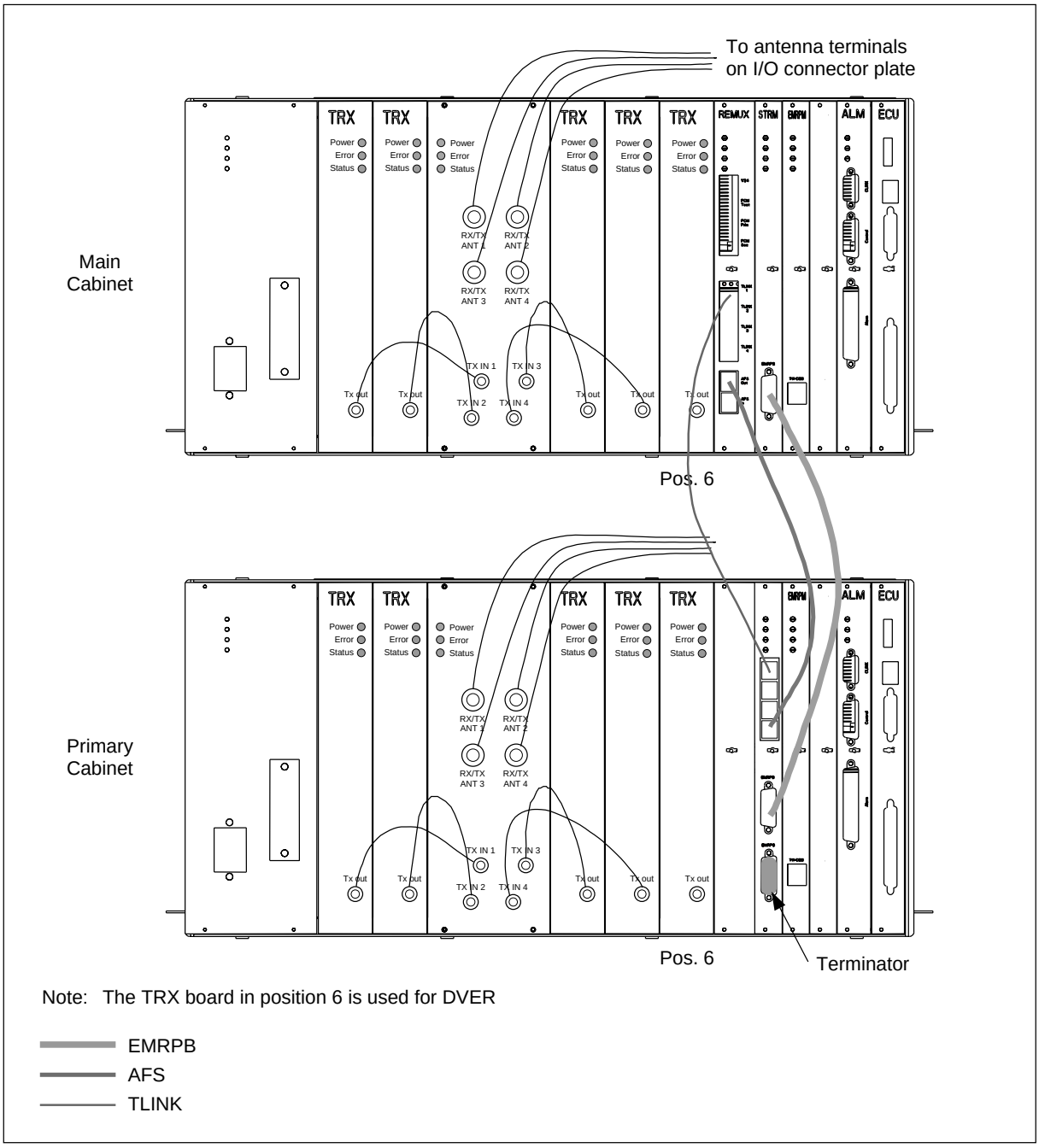

Figure C-4. Two-Sector Site, Two Cabinets, Main and Primary Cabinet have Four Antennas each

4 Three-Sector Sites

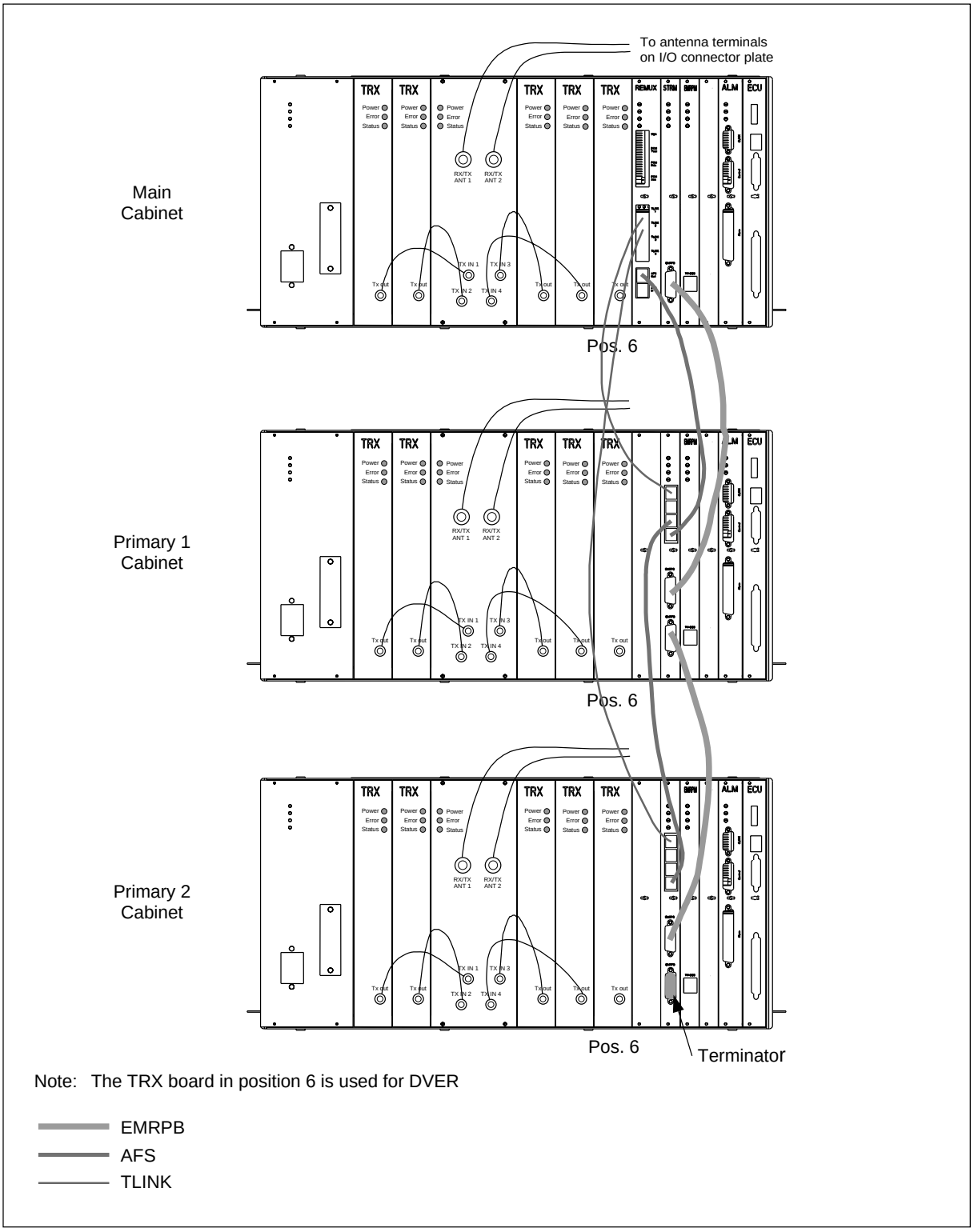

Figure C-5. Three-Sector Site, each Cabinet has Two Antennas

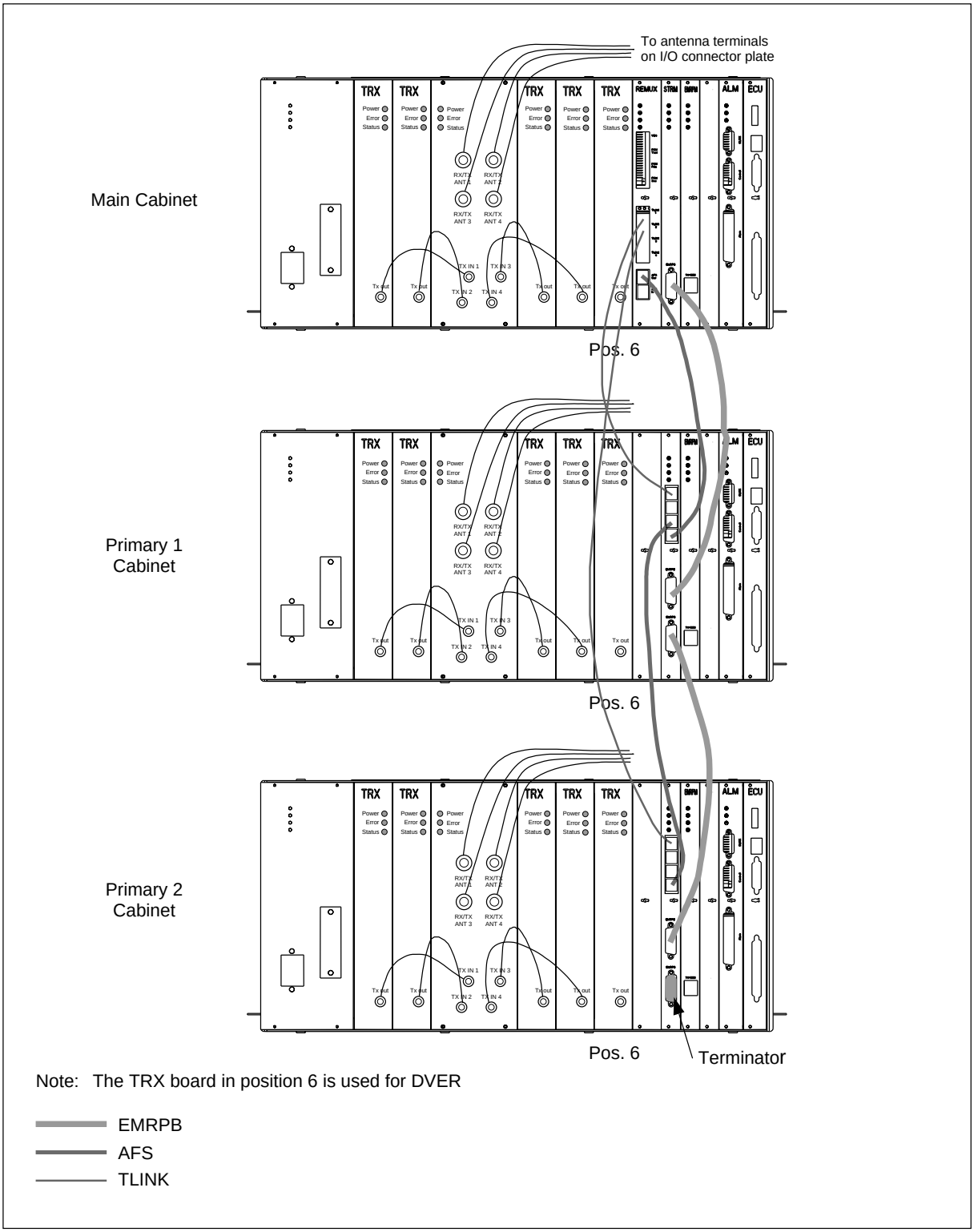

Figure C-6. Three-Sector Site, each Cabinet has Four Antennas

5 Transceivers (TRXs)

The transceiver cables RPM 513 977/00185 are installed as shown in Figure C-7 on page C-9.

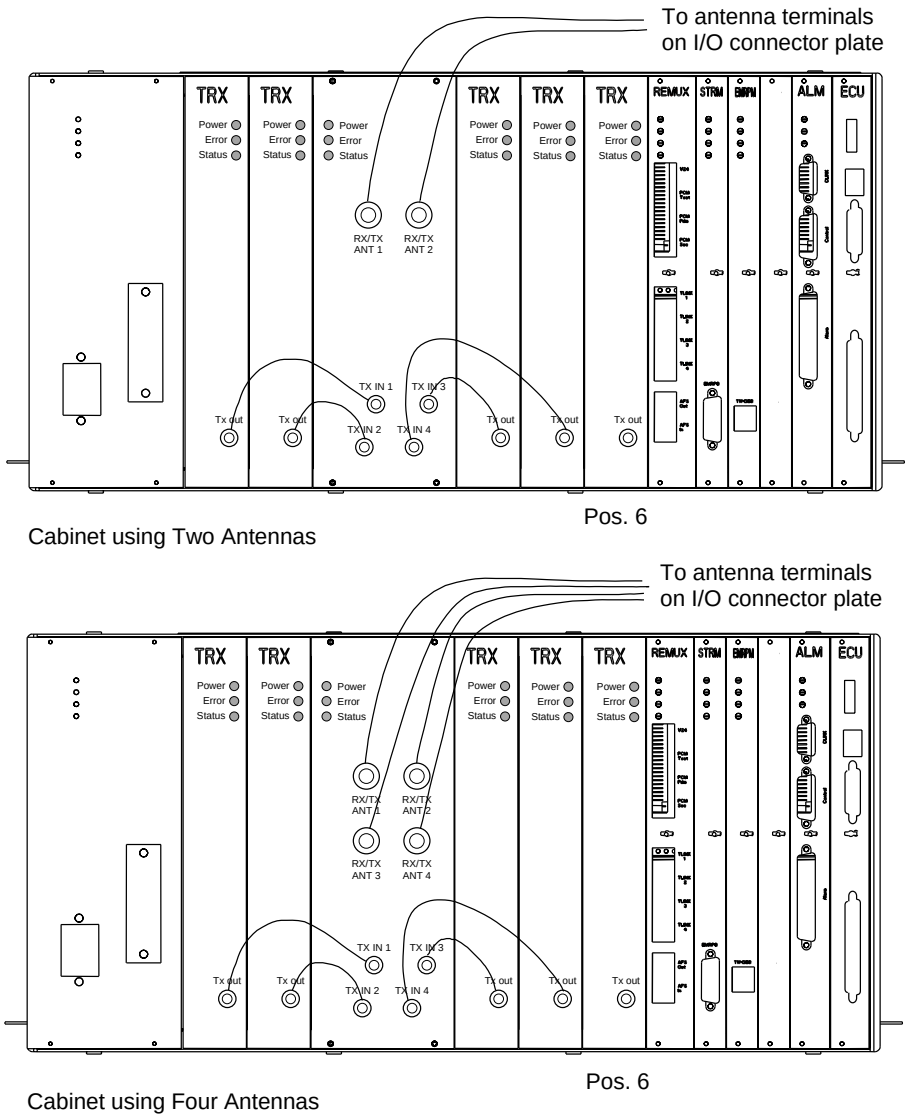

Note: The TRX board in position 6 is used for DVER
Cabinets illustrated are Main Cabinets, but the cabling is the same for Primary Cabinets.

Figure C-7. TRX Cable Connections for Main and Primary Cabinets

Appendix D

Conversion Table

1 Introduction D-3

2 Conversion Table D-3

1 Introduction

This appendix contains a conversion table between some SI units and non SI units.

2 Conversion Table

Table D-1. Conversion Table between SI Units and non SI Units

SI Unit	Non SI Unit
1 Nm	0.738 ft lbf (foot pound-force)
0.356 Nm	1 ft lbf
1 kg	2.2 lb
0.45 kg	1 lb = 16 oz
0.305 m	1 ft = 12 inches
0.0254	1 inch