CONTENTS

Radio Overview 3

Parts of the Radio 3
On-Off/Volume Knob. 4
Channel Selector Knob 4
Push-to-Talk (PTT) Button 4
Microphone 4
LED Indicator 4
Programmable Buttons 4
Menu Keys 6
Keypad Keys. 6
LCD Screen 6
Indicator Tones 8
Programmable Buttons' Audio Indicators. . 8

Getting Started 9

Battery Information. 9
Charging your Battery 9
Accessory Information 10
Attaching the Battery. 10
Removing the Battery 10
Attaching the Antenna. 11
Removing the Antenna 11
Attaching the Belt Clip. 12
Removing the Belt Clip 12
Turning the Radio On or Off 13
Adjusting the Radio's Volume 13
Selecting a Radio Channel 13
Sending a Call 14
Receiving a Call. 14

Radio Call Information 15

Repeater or Talkaround Mode. 15
Setting Tight or Normal Squelch 15
Setting the Power Level. 16

Scan 18

Starting or Stopping a Scan Operation . . .18
Talkback 19
Deleting a Nuisance Channel 19
Adding a Deleted Nuisance Channel back to the Scan List 19
Prioritization of a Scan List member 19

Phone 21

Making a Phone Call 21
Entering the Phone Mode. 21
Sending the Access Code 21
Sending the Phone Number 22
The Phone Conversation 23
Ending the Phone Call 23

CONTENTS

Phone List 24
Adding an Entry to the Phone List . . . 24
Deleting an Entry 24
Editing an Entry. 25

Audio/Tone Settings 27

General Instructions. 27

Utilities 28

General Instructions. 28

Safety Information 29

Safe And Efficient Operation Of Motorola Two-Way Radios 29
Exposure To Radio Frequency Energy 29
Portable Radio Operation and EME Exposure. 30
Electromagnetic Interference/Compatibility 30
Operational Warnings 30
Operational Cautions 31
Recycling/Disposal of NiCd Batteries. . . . 32

RADIO OVERVIEW

PARTS OF THE RADIO

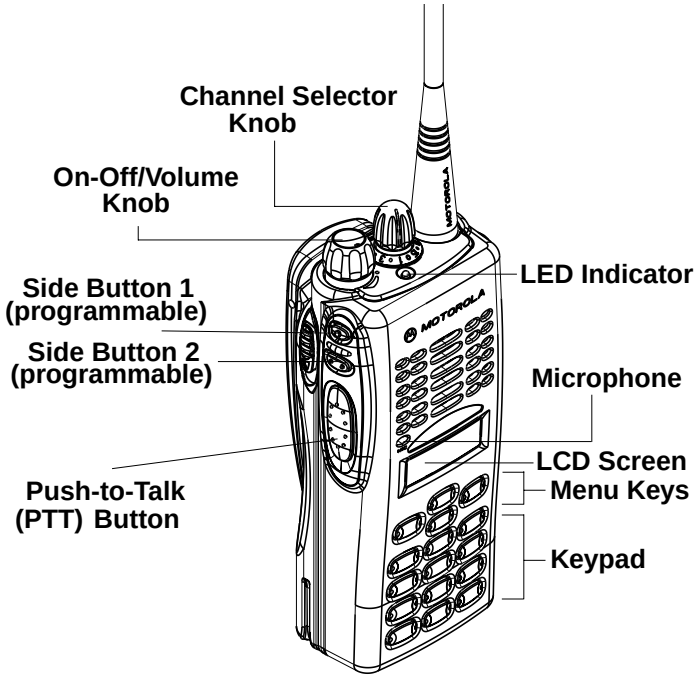

On-Off/Volume Knob

Turns the radio on or off, and adjusts the radio's volume.

Channel Selector Knob

Switches the radio to different channels.

Push-to-Talk (PTT) Button

Press and hold down this button to talk; release it to listen.

Microphone

Speak clearly into the microphone when sending a message.

LED Indicator

Indicates power-up, radio call and scan status.

LED State/Color	Indication
Radio Call Continuous Red Blinking Red	 Sending message. Receiving message.
Power Level *Continuous Red *Continuous Green	 Sending message in high power. Sending message in low power.
Scan Blinking Green*	Scanning for activity.
Low Battery Blinking Red when sending message	Low battery level.

* Only if this feature is programmed into your radio. Check with your dealer for more details.

Programmable Buttons

Your radio's two side buttons can be programmed by your dealer as short-cut buttons for many of the radio's features.

Check with your dealer for a complete list of the functions your radio's programmable buttons support.

The table on page 5 shows the functions available by

- **short press** - quickly pressing and releasing the programmable buttons, or
- **long press** - pressing and holding the programmable buttons for a period of time (at least 1.5 seconds) before releasing, or
- **hold down**- pressing and holding down the programmable buttons while checking status or making adjustments.

Depending on how your radio has been programmed by your dealer, these functions are activated **EITHER** through short press **OR** long press, but **NOT** both.

Button	Short Press/Long Press	Hold Down
Monitor	—	Monitors the selected channel for any activity.
Volume Set	—	Sounds a tone for adjusting the radio's volume level.
Scan	Starts or stops the Scan operation.	—
Nuisance Channel Delete	Deletes a nuisance channel while scanning.	—
Power Level	Toggles your radio's transmit power level between High and Low power.	—
Repeater/ Talkaround	Toggles between using a repeater and transmitting directly to another radio.	—
Squelch	Toggles your radio's squelch level between tight and normal squelch.	—
Keypad Lock	Locks or unlocks your radio's keypad.	—
Phone	Makes a Phone Call.	—
Speed Dial	Accesses the phone numbers in your phone list.	—
Light	Turns on your radio's backlight.	—

Menu Keys

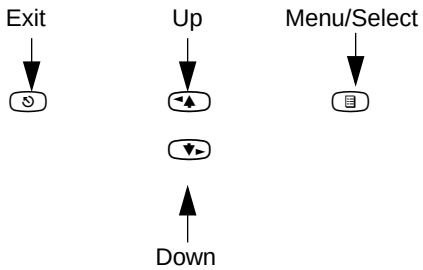

Menu/Select Key

Enters Menu Mode. When already in Menu Mode, makes Menu selections.

Exit Key

Backs up one level in the Menu hierarchy (short press); also exits the Menu Mode (long press).

Up Key

Used for scrolling when in Menu Mode. Used as a backspace key when editing.

Down Key

Used for scrolling when in Menu Mode. Moves the cursor right or inserts a space when editing.

Keypad Keys

Used to dial a phone number or enter programming list entries.

When entering information for the programming lists, each key can generate numeric information.

LCD Screen

Used to display channel, menu as well as other iconic information.

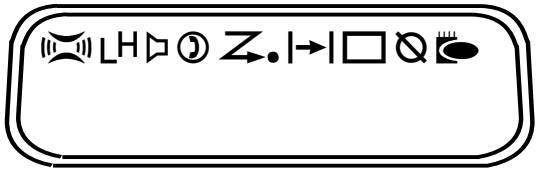

Symbol	Name and Description
	Companding Indicator Indicates that you have activated the companding feature.
L H	**Power Level Indicator** “L” is lit up when your radio is configured to transmit in Low Power, while “H” is lit up when your radio is configured to transmit in High Power.
	Phone Indicator Indicates that you are performing a Phone operation.
	Scan Indicator Indicates that you have activated the Scan feature. Also during Scan, indicates that there is some activity on a non-priority channel.
	Priority 1 Scan Indicator (● flashing) During Scan, indicates that there is some activity on a Priority 1 channel.
	Monitor Indicator Indicates that you are monitoring the selected channel.

Symbol	Name and Description
	Talkaround Indicator When lit, indicates that you are not transmitting through the repeater. When not lit, you are transmitting through the repeater.
	Programming Mode Indicator Indicates that you are editing one of the Program Lists.
	Keypad Lock Indicator Indicates that your keypad is locked.

INDICATOR TONES

High pitched tone ☐ Low pitched tone ■

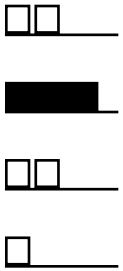

Self Test Pass Tone

Self Test Fail Tone

Positive Indicator Tone

Negative Indicator Tone

PROGRAMMABLE BUTTONS' AUDIO INDICATORS

Some programmable keys function as toggles (alternating between two different choices). These keys use audio indicators to indicate the change.

Button	Positive Indicator Tone	Negative Indicator Tone
Scan	**Start** Scan operation	**Stop** Scan operation
Power Level	Radio transmits at **high** power	Radio transmits at **low** power
Squelch*	Radio operates in **tight** squelch	Radio operates in **normal** squelch
Repeater/Talkaround	Radio **DOES NOT** use the repeater	Radio uses the repeater
Keypad Lock	Radio's keypad is **locked**.	Radio's keypad is **unlocked**.
* There is no visual indicator for the Squelch function.		

GETTING STARTED

BATTERY INFORMATION

Charging your Battery

When the battery level is very low, a blinking red LED indicator lights up during transmit mode, and an alert tone sounds. You will need to recharge the battery before you can continue to use your radio.

Place the radio with the battery attached or the battery alone in the charger. The charger's LED indicator will indicate the charging progress.

NOTE: Since new batteries or batteries that have not been used for several months could prematurely indicate full charge (solid green LED), charge the batteries for 14 to 16 hours prior to initial use to achieve optimal performance.

LED color	Status
Single flash of Green	Successful charger power-up.
Flashing Red*	Battery is unchargeable.
Flashing Yellow	Charger is getting ready to charge.
Red	Battery is charging.
Flashing Green†	Battery is 90% charged.
Green	Battery is fully charged.

* Remove the battery from charger and use a pencil eraser to clean the four metal contacts on the bottom of the battery. Place the battery back into the charger. If the LED indicator continues to flash red, replace the battery.

† A standard battery may require one hour to charge to 90% capacity.

ACCESSORY INFORMATION

Attaching the Battery

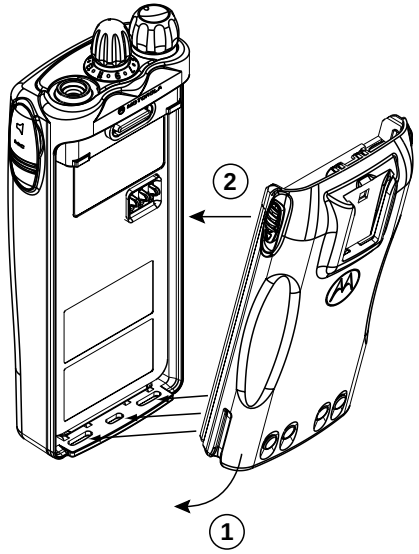

1. Fit the extensions at the bottom of the battery into the slots at the bottom of the radio's body.
2. Press the top part of the battery toward the radio until you hear a click.

Removing the Battery

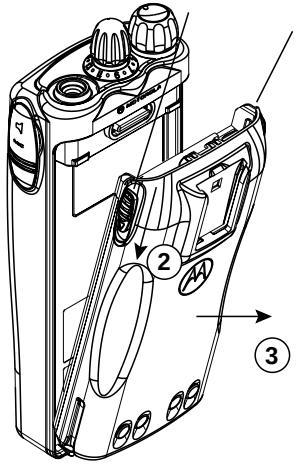

1. Turn off the radio, if it is turned on.
2. Slide the battery latches on both sides of the battery downwards.
3. Pull the top part of the battery away from the radio body.

Attaching the Antenna

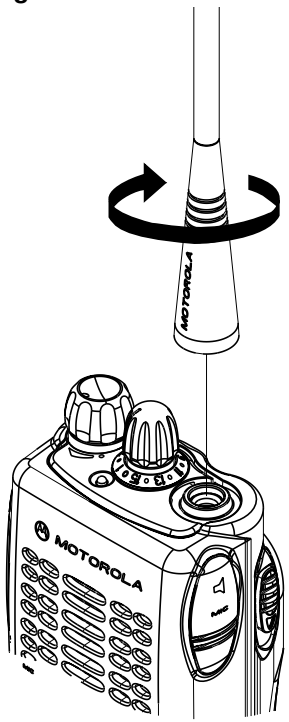

Turn the antenna clockwise to attach it.

Removing the Antenna

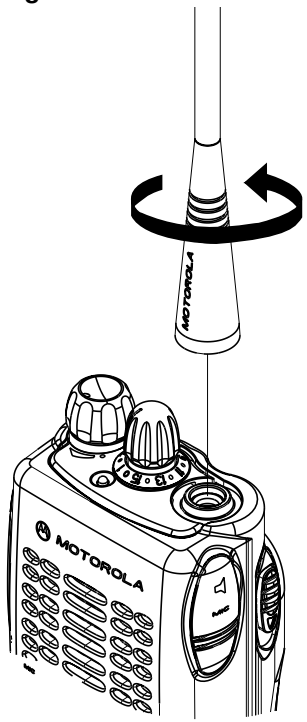

Turn the antenna counter-clockwise to remove it.

Attaching the Belt Clip

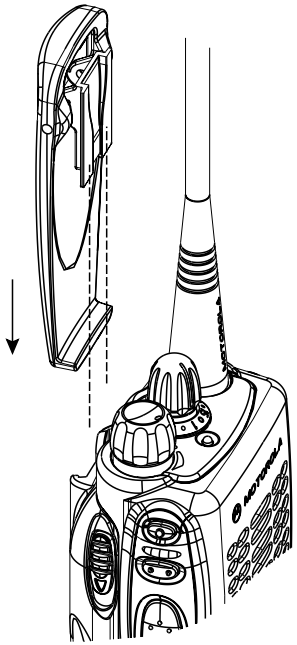

1.	Align the grooves of the belt clip with those of the battery.
2.	Press the belt clip downward until you hear a click is heard.

Removing the Belt Clip

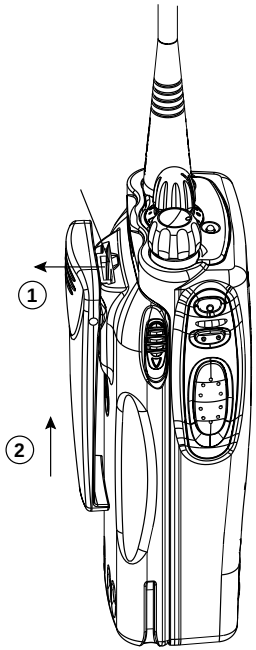

1.	Use a key to press the belt clip tab away from the battery.
2.	Slide the belt clip upward to remove it.

TURNING THE RADIO ON OR OFF

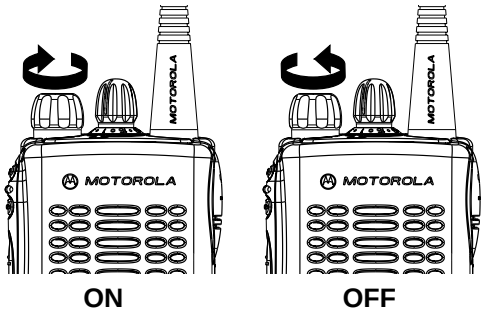

1. Turn the **On-Off/Volume Control** knob clockwise to turn on the radio. You will hear the Self Test Pass Tone ( ) and see a green LED if the radio powers up successfully. If the radio fails its self test, you will hear the Self Test Fail Tone ( ). Switch off and on again and if fault persists contact your dealer.
2. To turn off the radio, turn the **On-Off/Volume Control** knob counter-clockwise, until you hear a click.

ADJUSTING THE RADIO'S VOLUME

1. Press and hold the preprogrammed **Volume Set** button; you will hear a continuous tone.
2. Turn the **On-Off/Volume Control** knob and adjust the volume level.
3. Release the preprogrammed **Volume Set** button.

SELECTING A RADIO CHANNEL

Your radio offers 16 channels for easy access to required conventional channels. Some channels on your radio may not be programmed. Check with your dealer for more information.

Turn the **Channel Selector** knob clockwise or counter-clockwise until you reach the desired channel.

SENDING A CALL

1. Turn your radio on.
2. Use the **Channel Selector** knob to select the desired channel.
3. Hold the radio in a vertical position, press the **PTT** button, and talk at a distance of about 2.5 to 5 cm (one to two inches) from the microphone.
4. Release the **PTT** button to listen.

RECEIVING A CALL

1. Turn your radio on.
2. Adjust the radio's volume.
3. Switch to the desired channel. Hold the radio in a vertical position with its microphone 2.5 to 5 cm (one to two inches) away from your mouth.

RADIO CALL INFORMATION

REPEATER OR TALKAROUND MODE

Talkaround Mode enables you to communicate with another radio when either:

- the repeater is not operating

  —or—

- your radio is out of the repeater's range but within communicating distance of another radio.

NOTE: The |→| symbol will appear on the LCD screen when Talkaround Mode is selected.

To select either Repeater Mode or Talkaround Mode:

Press the preprogrammed **Repeater/ Talkaround** button to toggle between the two modes. A positive indicator tone indicates that the radio is in talkaround mode, while a negative indicator tone indicates that the radio is in repeater mode.

—or—

1.	to enter Menu Mode.	
2.	*or* until	**TLK ARD**
3.	to select	**TLK ARD**
4.	*or* until	**OFF**
	(talk through repeater)	
	or until	**ON**
	(talk directly without going through repeater).	
5.	to select the desired option.	

SETTING TIGHT OR NORMAL SQUELCH

Use this feature to filter out nuisance (unwanted) calls and/or background noise. However, tightening squelch could cause calls from remote locations to be filtered out as well. In this case, normal squelch may be more desirable.

To select tight or normal squelch:

Press the preprogrammed **Squelch** button to toggle between tight and normal squelch. A

positive indicator tone indicates that the radio is operating in tight squelch, while a negative indicator tone indicates that the radio is operating in normal squelch.

—or—

1.	to enter Menu Mode.	
2.	*or* until	**UTILITY**
3.	to select	**UTILITY**
4.	*or* until	**SQUELCH**
5.	to select	**SQUELCH**
6.	*or* until	**TIGHT**
	(tighten channel's squelch),	
	or until	**NORMAL**
	(channel operates under normal squelch).	
7.	to select the squelch setting.	

SETTING THE POWER LEVEL

Each channel in your radio has a predefined transmit power level that can be changed.

- *High power* (**H**) allows you to reach a radio that is farther away.
- *Low power* (**L**) conserves the battery's charge.

To set the power level:

Press the preprogrammed **Power Level** button to toggle between *low* and *high* transmit power level. A positive indicator tone indicates that the radio is in high power mode, while a negative indicator tone indicates that the radio is in low power mode.

—or—

1.	to enter Menu Mode.	
2.	*or* until	**UTILITY**
3.	to select	**UTILITY**
4.	*or* until	**TX PWR**
5.	to select	**TX PWR**

6. ◄▲ *or* ▼► until **HIGH**

(to transmit at high power),

or until **LOW**

(to transmit at low power).

7. ▤ to select the power level.

SCAN

You can monitor several channels in order to receive any call that is transmitted on any of these channels. Sixteen different channels can be programmed into each scan list by the dealer.

Once the radio's scan operation is activated and the radio detects a call coming through a channel in its scan list, it switches to that channel for you to receive the call.

NOTE: The same channels can be assigned to different scan lists.

STARTING OR STOPPING A SCAN OPERATION

The symbol, and the channel you are transmitting on, will appear on the LCD screen when you start a scan operation.

The LED indicator blinks green during a scan operation, and stops blinking when the radio switches to a channel.

NOTE: If you enter Menu Mode while the radio is scanning, scanning will stop. It will resume when you exit Menu Mode.

To start or stop a scan operation:

1. Press the preprogrammed **Scan** button to start a scan operation. You will hear a positive indicator tone.
2. Press the preprogrammed **Scan** button again to stop the scan operation. You will hear a negative indicator tone.

—or—

1. to enter Menu Mode.
2. *or* until **SCAN**
3. to select **SCAN**
4. *or* until **ON** (to start a scan operation), *or* until **OFF** (to stop a scan operation).
5. to select the desired option.

NOTE: The LED indicator will blink (green) during a scan operation. It will stop blinking when the radio switches to a channel.

TALKBACK

If the programmable Talkback option is set, you can respond to any calls received during the scan operation by pressing the PTT before the programmed hang-time ends. Check with your dealer for details.

DELETING A NUISANCE CHANNEL

If a channel continually generates unwanted calls or noise (a “nuisance” Channel), you can temporarily remove it from the scan list by performing a *Nuisance Channel Delete* operation.

1. While the radio is on the Nuisance Channel, press the preprogrammed **Nuisance Channel Delete** button until you hear a tone.
2. Release the **Nuisance Channel Delete** button. The nuisance channel is deleted.

NOTE: You cannot perform a *Nuisance Channel Delete* on a priority channel or if there is only one remaining channel in the scan list.

ADDING A DELETED NUISANCE CHANNEL BACK TO THE SCAN LIST

1. Press the **Scan** button to stop the scan operation.
2. Press the **Scan** button again to re-start the scan operation. The Deleted Nuisance Channel is reinstated to the scan list.

PRIORITIZATION OF A SCAN LIST MEMBER

You may want your radio to check a particular channel more frequently for calls. Prioritization of scan list members is done by your dealer using the Customer Programming Software. Check with your dealer for details.

Priority Channel	Scanning Sequence
None specified	Ch1➡Ch2➡Ch3➡ Ch4➡...Ch1
Channel **2**	Ch**2**➡Ch1➡Ch**2**➡Ch3➡ Ch**2**➡Ch4➡Ch**2**➡...Ch1

Even though your radio has switched to a non-priority channel, your radio will still check for activity on the priority channel. If activity is detected the radio will switch to the priority channel.

PHONE

You can use your radio to connect to a phone line to make a phone call.

To do this, your radio must send an access code to a station that connects it to a phone line. After you have finished your call, the radio has to send a deaccess code to shutdown the connection to the phone line.

MAKING A PHONE CALL

You can make a phone call by using the menu or by using the programmed Phone button. The icon will light up on the LCD screen when you are in Phone mode.

A complete phone session consists of

- entering the Phone mode
- sending the access code
- sending the phone number
- having the phone conversation
- ending the phone call.

Entering the Phone Mode

Before you can make a phone call, you must enter the radio's Phone mode.

1. Press the Phone button.

To enter the Phone mode via the menu:

1.	to enter Menu Mode.	
2.	*or* until	**PHONE**
3.	to select	**PHONE**
	You will see the last phone number dialed; shown here as	**5554567**

Sending the Access Code

Your radio can be programmed to send the access code in any of the following ways:

- manual (for radios with keypad only)
- automatic delayed
- automatic immediate.

Check with your dealer for more details.

Method	Steps to Take
Manual*	Dial the access code from the keypad.
Automatic Delayed	Press and release the PTT; the radio automatically sends the preprogrammed access code.
Automatic Immediate	You do not have to do anything; the radio immediately sends the access code when it enters phone mode.

* for radios with keypad only

Sending the Phone Number

After the access code is sent, you should wait for a dialing tone before sending your phone number.

You can send

- a phone number that is stored in the radio, or
- a new number (for radios with keypad only).

Additionally, depending on how your radio is programmed, if you use the keypad to send a number, the radio can send the numbers in one of the following ways:

- live dial
- buffered dial.

Check with your dealer for details.

Sending a Stored Phone Number

You can access the stored phone numbers by

- recalling the last number dialed,
- using the phone list, or
- using the speed dial feature (for radios with keypad only).

Method	Steps to Take
Last Number Redial*	Press and release the PTT; the radio sends the last number dialed.
Phone List	1. Press ◄▲ or ▼► to scroll the phone list until you reach the desired phone number.† 2. Press and release the PTT to send the number.
Speed Dial	1. Press and release the programmed Speed Dial button. 2. Press the numbered keys (1-9) corresponding to the first nine phone numbers in the phone list. Press “0” if you want the last number dialed. 3. If your radio uses buffered dial, press and release the PTT. 4. The radio sends out the phone number.

* The method described is not applicable for radios which manually send the access code; these radios can access this number from the phone list or the speed dial.

† For radios that manually send the access code, press the Down Key once to access the last number dialed.

Sending a New Number (for radios with keypad only)

You enter the phone number by pressing the relevant keys on the keypad.

Method	Steps to Take
Live Dial	Enter the phone number by using the keypad; the radio sends out the numbers as the keys are pressed.
Buffered Dial	1. Enter the phone number by using the keypad; the radio saves the selected numbers in a buffer. 2. Press and release the PTT; the radio sends out the numbers in its buffer.

The Phone Conversation

Once the radio has connected to the intended party, you can begin the conversation. Even though this is a phone call, your conversation mimics a radio call (that is, both parties speak in turn).

1. Press and hold the PTT, while talking into the microphone.
2. Release the PTT when you finish what you want to say, and wait for the response.
3. Repeat steps 1 and 2 until the conversation ends.

NOTE: The radio starts a programmable Time-Out-Timer the moment both parties stop transmitting (talking). If the Time-Out-Timer expires, the radio will end the phone call.

Ending the Phone Call

Just as the radio needs to send the access code when starting a phone call, the radio needs to send the deaccess code to end the phone call.

The radio can send the deaccess code in any of the following ways:

- manual (for radios with keypad only), and
- automatic.

Check with your dealer for details.

1. If your radio sends the deaccess code manually, dial the deaccess code from the keypad.
2. Press the **Phone** button to exit phone mode.

   NOTE: Radios using the automatic method will send the deaccess code automatically.

   or

2. Exit the phone mode using the menu:

(⏻) to exit phone mode and return to **PHONE**

or

Hold (⏻) to exit the *Menu Mode.*

NOTE: Radios using the automatic method will send the deaccess code automatically.

PHONE LIST

Your radio can store a list of frequently accessed phone numbers. The ☐ icon will light up on the LCD screen when you edit the phone list.

NOTE: The radio will not receive any calls when you are editing the phone list.

Adding an Entry to the Phone List

1. (▤) to enter Menu Mode.
2. (◄▲) *or* (▼►) until **PROGRAM**
3. (▤) to select **PROGRAM**
4. (◄▲) *or* (▼►) until **PHONE**
5. (▤) to select **PHONE**
6. (◄▲) *or* (▼►) until **ADD**
7. (▤) to select **ADD**

   You will see **NUMBER**
8. Use the keypad to enter the phone number. Press the numeric keys to enter the numbers. You can also add a dash (press (▼►)) and a Pause Indicator (press and hold (#) the key until the ♯ character on the LCD screen changes to a "P").
9. (▤) to store the phone number.

   (▤) again to confirm its storage.
10. (⏻) to return to **ADD**

    or

    Hold (⏻) to exit Menu Mode.

PHONE

Deleting an Entry

1. to enter Menu Mode.
2. *or* until **PROGRAM**
3. to select **PROGRAM**
4. *or* until **PHONE**
5. to select **PHONE**
6. *or* until **DELETE**
7. to select **DELETE**
8. *or* until you see the entry you wish to delete.
9. to select the entry.
   again to confirm the deletion.
10. to return to **DELETE**

    or

    Hold to exit Menu Mode.

Editing an Entry

1. to enter Menu Mode.
2. *or* until **PROGRAM**
3. to select **PROGRAM**
4. *or* until **PHONE**
5. to select **PHONE**
6. *or* until **EDIT**
7. to select **EDIT**
8. *or* until you see the entry you wish to edit.
9. to select the entry.

   or until **NUMBER**

   (to edit the entry's phone number),

   or until **LOCATN**

   (to edit the entry's location in the phone list).

PHONE

11. (▤) to select the edit type.

12. Use the keypad to edit the entry. See *Keypad Keys* on page 6.

13. (▤) to store the information.

14. (⏻) to return to **EDIT**

or

Hold (⏻) to exit Menu Mode.

AUDIO/TONE SETTINGS

The Audio/Tones menu allows you to customize the audio and tone settings on your radio.

GENERAL INSTRUCTIONS

1. (menu) to enter Menu Mode.
2. (◄▲) *or* (▼►) until **TONES**
3. (menu) to select **TONES**
4. (◄▲) *or* (▼►) until you see the audio/tone setting you wish to change.
5. (menu) to select the tones setting. You will see the current status of the setting.
6. (◄▲) *or* (▼►) to see the available optional settings.
7. (menu) to select the desired setting.

Use instructions above to change your radio's audio and tones settings shown in the table below.

Menu Items	Optional Settings	Function
ALERT	ON OFF	Allows you to turn all tones on or off.
KEYPAD	ON OFF	Allows you to turn the tones associated with the radio keys on or off.

UTILITIES

The Utilities menu allows you to customize some general settings on your radio.

GENERAL INSTRUCTIONS

1. to enter Menu Mode.
2. *or* until **UTILITY**
3. to select **UTILITY**
4. *or* until you see the setting that you wish to change.
5. to select the setting to change. You will see the current status of the setting.
6. *or* to see the available optional settings.
7. to select the desired setting.

Use the instructions above to change your radio settings shown in the table below.

Menu Items	Optional Settings	Function
SQUELCH	NORMAL TIGHT	Allows you to change the squelch setting of the radio between normal and tight.
TX LEVEL	HIGH LOW	Allows you to change the power level of the radio between high or low.
LIGHT	ON OFF	Allows you to turn the back-light feature of the radio on or off.

SAFETY INFORMATION

SAFE AND EFFICIENT OPERATION OF MOTOROLA TWO-WAY RADIOS

This document provides information and instructions for the safe and efficient operation of Motorola Portable Two-Way Radios.

For information regarding radio use in hazardous areas, please refer to the Factory Mutual (FM) approval manual supplement or Instruction Card which is included with radio models that offer this capability.

Exposure To Radio Frequency Energy

Your Motorola Two-Way Radio, which generates and radiates radio frequency (RF) electromagnetic energy (EME) is designed to comply with the following National and International Standards and Guidelines regarding exposure of human beings to radio frequency electromagnetic energy:

- Federal Communications Commission Report and Order No. FCC 96-326 (August 1996)
- American National Standards Institute (C95.1 - 1992)
- National Council on Radiation Protection and Measurements (NCRP-1986)
- International Commission on Non-Ionizing Radiation Protection (ICNRP- 1986)
- European Committee for Electrotechnical Standardisation (CENELEC):

ENV 50166-1 1995 E	*Human exposure to electromagnetic fields Low frequency (0 Hz to 10 kHz)*
ENV 50166-2 1995 E	*Human exposure to electromagnetic fields High frequency (10 kHz to 300 GHz)*
Proceedings of SC211/B 1996	*“Safety Considerations for Human Exposure to EMFs from Mobile Telecommunication Equipment (MTE) in the Frequency Range 30MHz - 6 GHz.”(EMF - Electro-Magnetic Fields)*

To assure optimal radio performance and to ensure that your exposure to radio frequency electromagnetic energy is within the guidelines in the above standards, always adhere to the following procedures:

Portable Radio Operation and EME Exposure

•When transmitting with a portable radio, hold radio in a vertical position with the microphone 2.5 to 5 centimeters (one or two inches) away from the mouth. Keep antenna at least 2.5 centimeters (one inch) from your head or body when transmitting.

- If you wear a portable Two-Way radio on your body, ensure that the antenna is at least 2.5 centimeters (one inch) from the body when transmitting.

Electromagnetic Interference/Compatibility

Note: Nearly every electronic device is susceptible to electromagnetic interference (EMI) if inadequately shielded, designed or otherwise configured for electromagnetic compatibility.

- To avoid electromagnetic interference and/or compatibility conflicts, turn off your radio in any facility where posted notices instruct you to do so. Hospital or health facilities may be using equipment that is sensitive to external RF energy.
- When instructed to do so, turn off your radio when on board an aircraft. Any use of a radio must be in accordance with airline regulations or crew instructions.

Operational Warnings

WARNING

Vehicles with an air bag

- Do not place a portable radio in the area over an airbag or in the air bag deployment area. Air bags inflate with great force. If a portable radio is placed in the air bag deployment area and the air bag inflates, the radio may be propelled with great force and cause serious injury to occupants of vehicle.

Potentially explosive atmospheres

- Turn off your Two-Way radio when you are in any area with a potentially explosive atmosphere, unless it is a radio type especially qualified for use in such areas (e.g. FM or Cenelec approved). Sparks in a potentially explosive atmosphere can cause an explosion or fire resulting in bodily injury or even death.

Batteries

- Do not replace or recharge batteries in a potentially explosive atmosphere. Contact sparking may occur while installing or removing batteries and cause an explosion.

Blasting caps and areas

- To avoid possible interference with blasting operations, turn off your radio when you are near electrical blasting caps. In a "*blasting area*" or in areas posted "*turn off two-way radio*", obey all signs and instructions.

Note: The areas with potentially explosive atmospheres referred to above include fuelling areas such as: below decks on boats; fuel or chemical transfer or storage facilities; areas where the air contains chemicals or particles, such as grain, dust or metal powders; and any other area where you would normally be advised to turn off your vehicle engine. Areas with potentially explosive atmospheres are often but not always posted.

Operational Cautions

Damaged antennas

- Do not use any portable two-way radio that has a damaged antenna. If a damaged antenna comes into contact with your skin, a minor burn can result.

Batteries

- All batteries can cause property damage and/or bodily injury such as burns if a conductive material such as jewellery, keys or beaded chains touch exposed terminals. The conductive material may complete an electrical circuit (short circuit) and become quite hot. Exercise care in handling any charged battery, particularly when placing it inside a pocket, purse or other container with metal objects.

RECYCLING/DISPOSAL OF NICD BATTERIES

The Basel Convention classifies used NiCd batteries as hazardous waste, unless certain exemptions apply.

At the end of your battery's useful life, it can be recycled. However, recycling facilities may not be available in all areas. Under various state or local laws, such batteries must be recycled or disposed of properly, and cannot be dumped in landfills or incinerators.

Motorola fully endorses and encourages the recycling of NiCd batteries. The following is a list of recycling facilities around the world, where you can ship your NiCd batteries to be recycled:

United States

INMETCO
P.O. Box 720
245 Porteville Road
Ellwood City, PA 16117
Tel:(412) 758-5515
Fax:(412) 758-9311

Europe

S.N.A.M.
Rue de la Garenne
Z.I. Chesnes Tharabie -BP733
Saint Quentin Fallavier
38297 La Verpilliere Cedex,
France
Tel: 033-74-94-59-85
Fax: 033-74-94-13-18

Asia

Hanil Metal Recycle Co. Ltd.
2404 Palryong-dong
Changwon-Shi
Kyongsangnam-Do, Korea
Tel: 082-551-93-1911
Fax: 082-551-96-0050

Japan

Onahama Refinery of Toho Zinc Co., Ltd.,
10 Aza-Yoshihama,
Onahama,
Iwaki-City Fukushima Prefecture,
Japan

Marubeni Co.
Head Office/Attn. B6B2
4-2 Ohtemachi 1-Choma
Ciyoda-Ku, Tokyo, Japan

Nippon Recycle Ctr., Corp.
6-3-19, Nishitamma, Kita-Ku
Osaka, 530, Japan
Tel: 081-6-311-9071
Fax: 081-311-0949

You should consider the methods of collecting, labeling, and shipping used NiCd batteries. Consult your federal, state, or local environmental authority for specific legal requirements and for recycling options in your area.

Motorola, as a responsible corporate citizen, has always been concerned with the protection of the environment. Please feel free to call our toll-free number,1-800-422-4210, for further battery information.