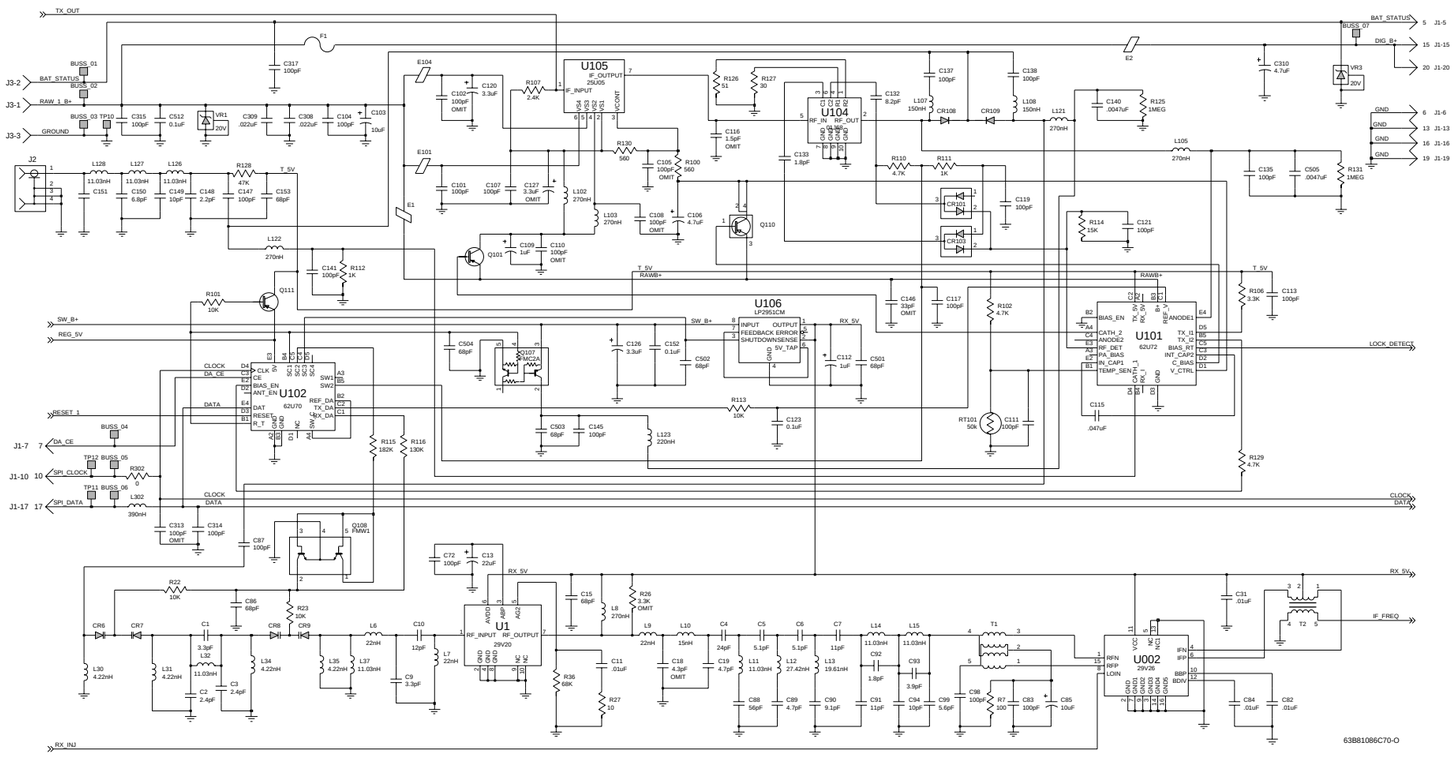
TX_OUT
BAT_STATUS
DIG_B+
GND
J1-5
J1-15
J1-20
J1-6
J1-13
J1-16
J1-19
J3-2
J3-1
J3-3
RAW_1_B+
GROUND
J2
T_5V
RAWB+
SW_B+
REG_5V
CLOCK
DA_CE
DATA
RESET_1
SPI_CLOCK
SPI_DATA
J1-7
J1-10
J1-17
U105
IF_OUTPUT
25G05
IF_INPUT
U104
RF_IN
RF_OUT
U106
LP2951CM
INPUT
OUTPUT
FEEDBACK
ERROR
SHUTDOWN
SENSE
5V_TAP
U101
62U72
BIAS_EN
CATH_2
ANODE2
RF_DET
PA_BIAS
IN_CAP1
TEMP_SEN
ANODE1
TX_I1
TX_I2
BIAS_RT
INT_CAP2
C_BIAS
V_CTRL
U102
62U70
U1
29V20
RF_INPUT
RF_OUTPUT
U002
29V20
RFIN
RFIP
LOIN
IFN
IFP
BBN
BBP
LOCK_DETECT
CLOCK
DATA
RX_5V
IF_FREQ
RX_INJ
63B81086C70-O

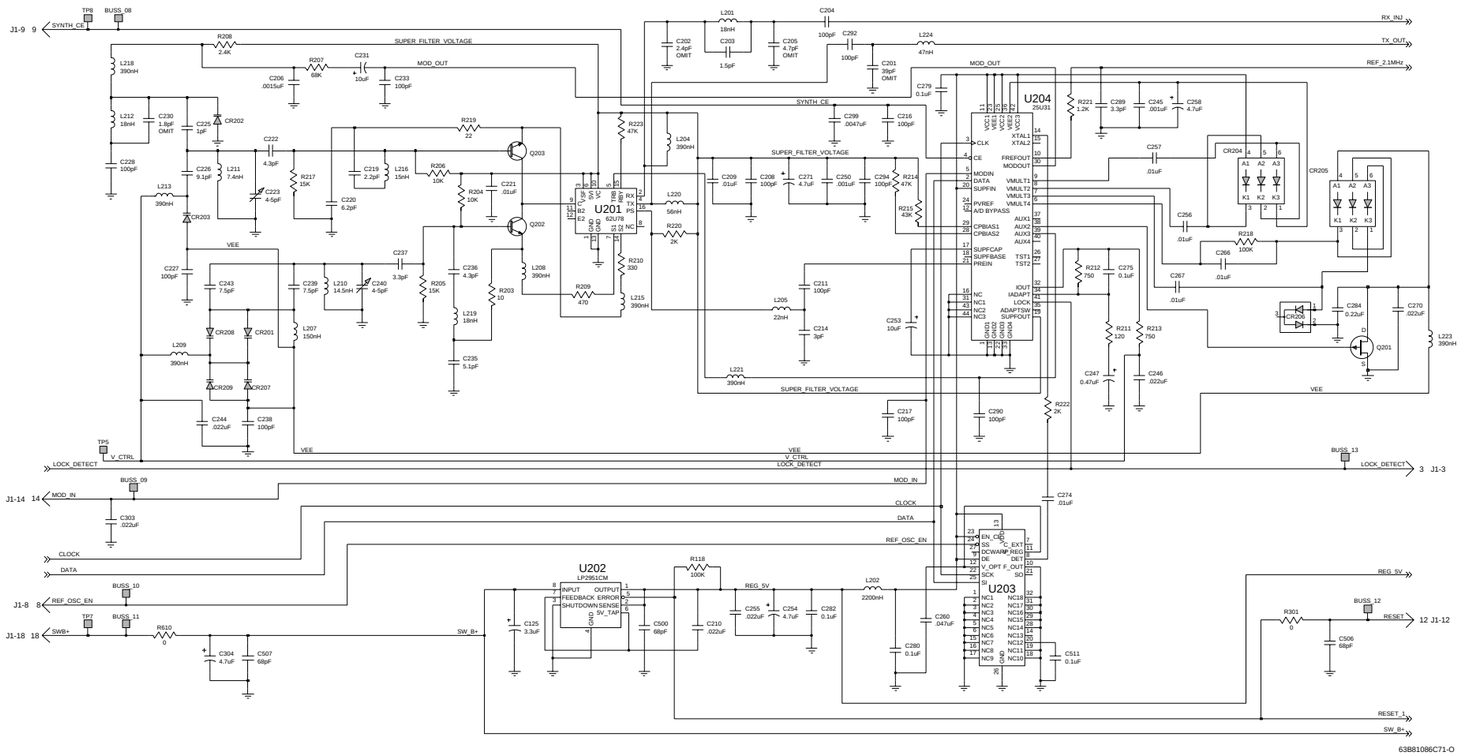
J1-9 9
SYNTH_CE
TP8
BUSS_08
SUPER_FILTER_VOLTAGE
MOD_OUT
RX_INJ
TX_OUT
REF_2.1MHz
U204
25U31
U201
62U78
U202
LP2951CM
U203
TP5
V_CTRL
LOCK_DETECT
BUSS_13
3 J1-3
J1-14 14
MOD_IN
BUSS_09
CLOCK
DATA
J1-8 8
REF_OSC_EN
BUSS_10
J1-18 18
SWB+
TP7
BUSS_11
SW_B+
REG_5V
BUSS_12
RESET
12 J1-12
RESET_1
VEE
63B81086C71-O

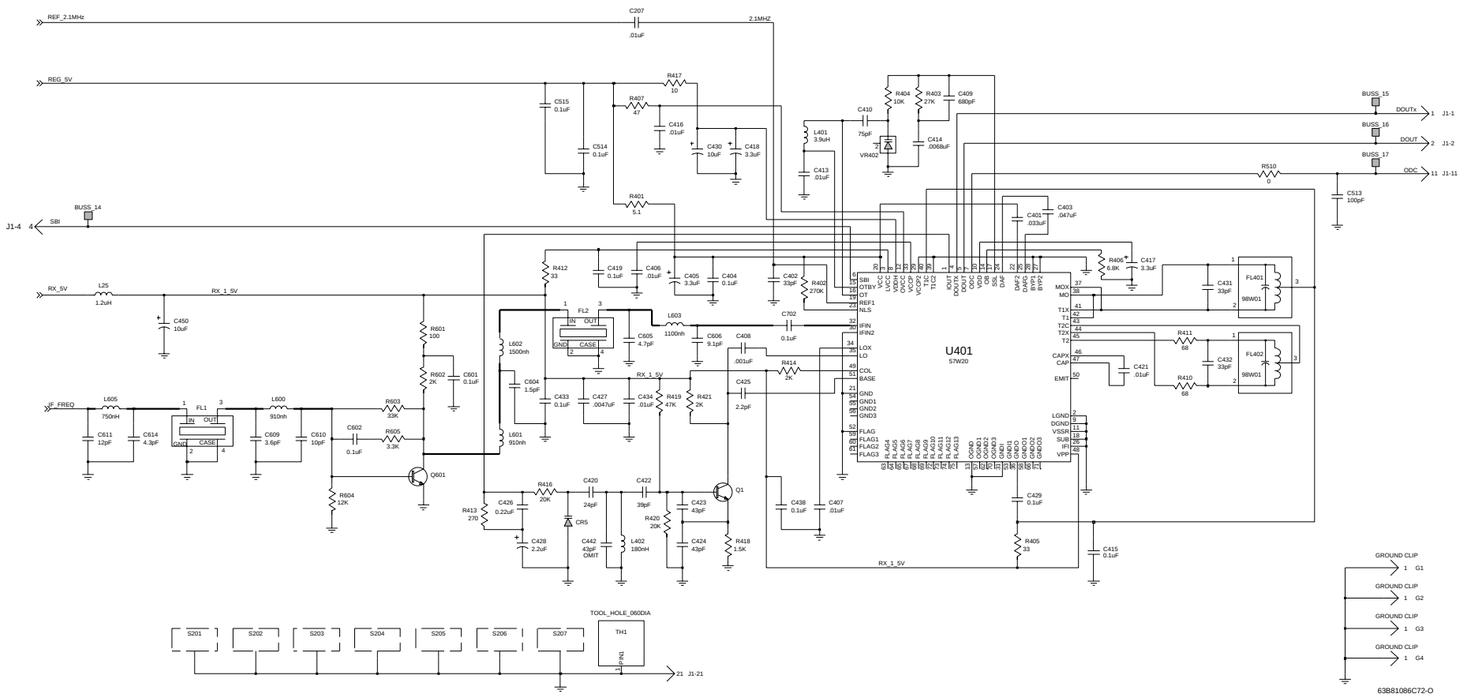
REF_2.1MHz
C207
.01uF
2.1MHZ
REG_5V
R417
10
C515
0.1uF
R407
47
C416
.01uF
C514
0.1uF
C430
10uF
C418
3.3uF
L401
3.9uH
C413
.01uF
C410
75pF
R404
10K
R403
27K
C409
680pF
C414
.0068uF
VR402
BUSS_15
DOUTx
J1-1
BUSS_16
DOUT
J1-2
BUSS_17
ODC
J1-11
R510
0
C513
100pF
R401
5.1
BUSS_14
SBI
J1-4
C403
.047uF
C401
.033uF
R406
6.8K
C417
3.3uF
R412
33
C419
0.1uF
C406
.01uF
C405
3.3uF
C404
0.1uF
C402
33pF
R402
270K
RX_5V
L25
1.2uH
RX_1_5V
C450
10uF
FL2
IN
OUT
GND
CASE
L603
1100nh
C702
0.1uF
C605
4.7pF
C606
9.1pF
C408
.001uF
R414
2K
R601
100
L602
1500nh
C604
1.5pF
C601
0.1uF
R602
2K
RX_1_5V
C433
0.1uF
C427
.0047uF
C434
.01uF
R419
47K
R421
2K
C425
2.2pF
IF_FREQ
L605
750nH
FL1
C611
12pF
C614
4.3pF
L600
910nh
C609
3.6pF
C610
10pF
C602
0.1uF
R603
33K
R605
3.3K
Q601
R604
12K
L601
910nh
U401
57W20
SBI
OTBY
OT
REF1
NLS
IFIN
IFIN2
LOX
LO
COL
BASE
GND
GND1
GND2
GND3
FLAG
FLAG1
FLAG2
FLAG3
MOX
MO
T1X
T1
T2C
T2X
T2
CAPX
CAP
EMIT
LGND
DGND
VSSP
SUB
IPI
VPP
C431
33pF
FL401
98W01
R411
68
C432
33pF
FL402
98W01
C421
.01uF
R410
68
C429
0.1uF
R405
33
C415
0.1uF
R416
20K
C420
24pF
C422
39pF
C426
0.22uF
R413
270
CR5
C423
43pF
Q1
R420
20K
C428
2.2uF
C442
43pF
OMIT
L402
180nH
C424
43pF
R418
1.5K
C438
0.1uF
C407
.01uF
RX_1_5V
S201
S202
S203
S204
S205
S206
S207
TOOL_HOLE_060DIA
TH1
21
J1-21
GROUND CLIP
G1
G2
G3
G4
63B81086C72-O