Owner's Manual

Distributed I/O System- Piccolo Interface Unit (PIU) and Piccolo-XR Unit

6802974C40-O

6802974C40-O

MOTOROLA and the Stylized M Logo are registered in the U.S. Patent and Trademark Office. All other product or service names are the property of their respective owners.

Copyright © 2004 Motorola All Rights Reserved

COMMERCIAL WARRANTY (STANDARD)

Motorola radio communications products are warranted to be free from defects in material and workmanship for a period of ONE (1) YEAR, (except for crystals and channel elements which are warranted for a period of ten (10) years), from the date of shipment. Parts, including crystals and channel elements, will be replaced free of charge for the full warranty period but the labor to replace defective parts will only be provided for one Hundred-Twenty (120) days from the date of shipment. Thereafter purchaser must pay for the labor involved in repairing the product or replacing the parts at the prevailing rates together with any transportation charges to or from the place where warranty service is provided. This express warranty is extended by Motorola Communications and Electronics Inc., 1301 E. Algonquin Road, Schaumburg, Illinois 60196, to the original purchaser only, and only to those purchasing for purpose of leasing or solely for commercial, industrial, or governmental use.

THIS WARRANTY IS GIVEN IN LIEU OF ALL OTHER WARRANTIES EXPRESS OR IMPLIED WHICH ARE SPECIFICALLY EXCLUDED, INCLUDING WARRANTIES OF MERCHANTABILITY OR FITNESS FOR A PARTICULAR PURPOSE. IN NO EVENT SHALL MOTOROLA BE LIABLE FOR INCIDENTAL OR CONSEQUENTIAL DAMAGES TO THE FULL EXTENT SUCH MAY BE DISCLAIMED BY LAW.

In the event of a defect, malfunction or failure to conform to specifications established by seller, or if appropriate, to specifications accepted by Seller in writing, during the period shown, Motorola, at its option, will either repair or replace the product or refund the purchase price thereof, and such action on the part of Motorola shall be the full extent of Motorola's liability hereunder.

This warranty is void if:

a. the product is used in other than its normal and customary manner;

b. the product has been subject to misuse, accident neglect or damage;

c. unauthorized alterations or repairs have been made, or unapproved parts used in the equipment.

This warranty extends only to individual products, batteries are excluded, but carry their own separate limited warranty. Because each radio system is unique, Motorola disclaims liability for range, coverage, or operation of the system as a whole under this warranty except by a separate written agreement signed by an officer of Motorola.

Non-Motorola manufactured products are excluded from this warranty, but subject to the warranty provided by their manufacturers, a copy of which will be supplied to you on specific written request.

In order to obtain performance of this warranty, purchaser must contact its Motorola salesperson or Motorola at the address first above shown, attention Quality Assurance Department.

This warranty applies only within the United States.

COMPUTER SOFTWARE COPYRIGHTS

The Motorola products described in this instruction manual may include copyrighted Motorola computer programs stored in semi conductor memories or other media. Laws in the United States and other countries preserve for Motorola certain exclusive rights for copyrighted computer programs including the exclusive right to copy or reproduce in any form the copyrighted computer program. Accordingly, any copyrighted Motorola computer programs contained in the Motorola products described in this instruction manual may not be copied or reproduced in any manner without the express written permission of Motorola. Furthermore, the purchase of Motorola products shall not be deemed to grant either directly or by implication, estoppel, or otherwise, any license under the copyrights, patents or patent applications of Motorola, except for the normal non-exclusive, royalty free license to use that arises by operation of law in the sale of a product.

CONTENTS

INTRODUCTION 1
Scope of this Manual 1
General Description.....1
Safety Handling Instructions.....5
INSTALLATION 7
General 7
PIU Installation.....8
Mounting the PIU On A Wall Using Screws.....9
Mounting the PIU Using a Bracket.....10
PIU DIN Rail Mounting.....11
PIU Electrical Connections.....12
PIU Antenna Connection 18
Piccolo–XR Installation 19
Piccolo–XR Screw Mounting Options 20
Piccolo–XR Electrical Connections.....22
THE DIOS PIU AND PICCOLO-XR UNITS 27
PIU Overview.....27
PIU Communication Ports.....28
PIU Connectors.....29
PIU LED Operation 29
PIU Adapter Operation 30
PIU Portable Use 30
Piccolo-XR Overview 36
Piccolo-XR Communication Ports 36
Piccolo-XR Connector.....37
APPENDIX A: PIU AND PICCOLO-XR SPECIFICATIONS.....39

PIU Specifications **39**

Environmental **39**

Mechanical **39**

PIU Board **40**

Power **41**

PICCOLO XR Specifications **44**

Environmental **44**

Mechanical **44**

PICCOLO XR Board **44**

Communication Ports **45**

Power **46**

APPENDIX B: MODELS AND ACCESSORIES **49**

General **49**

APPENDIX C: ANTENNA **51**

General **51**

Flexible Antenna Specifications **51**

Pole Antenna **52**

Pole Antenna installation **53**

APPENDIX D: PIU/PICCOLO–XR MOUNTING TEMPLATES ... **57**

INTRODUCTION

Scope of this Manual

This manual provides instructions for the installation and operation of the Distributed I/O system Piccolo Interface Unit (PIU) and Piccolo–XR units. The Distributed I/O System includes PIUs and Piccolo–XRs. Each PIU can be linked to up to 256 Piccolo–XRs. For more information on the PIU and Piccolo–XR, see the online help of the DIOS Service Toolkit.

General Description

The Distributed I/O System (DIOS) is a self-sustained system designed to function within the IRRInet irrigation control product line.

The DIOS consists of the following components:

- Piccolo Interface Unit (PIU)
- Piccolo–XR Units

The PIU functions as an interface between the host application (irrigation SW and HW) and the Piccolo–XR units. The PIU and Piccolo-XR are portable devices, which are commonly used in fixed installations. The PIU uses one of its communication ports to link to the host application and radio communication to link to the Piccolo–XR units. Figure 1 provides a general view of the DIOS System.

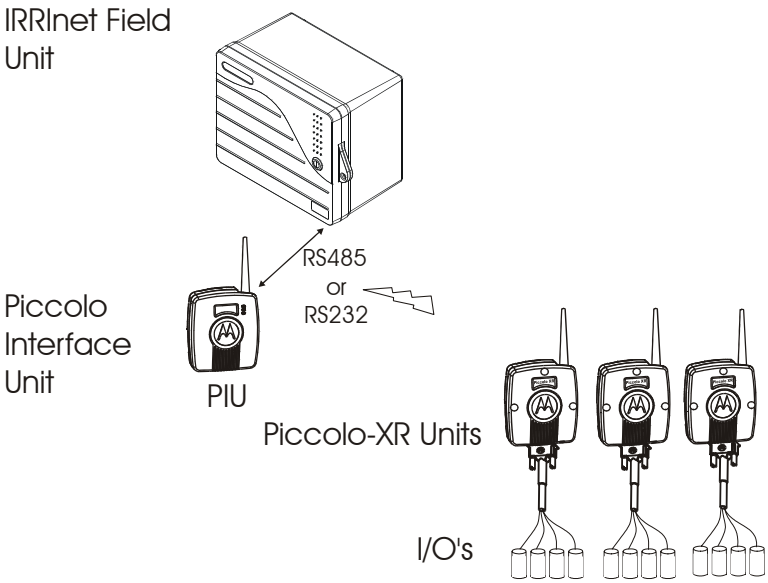

Figure 1
DIOS –General System View

The battery-operated Piccolo–XR unit is available in various models with different options of Inputs and Outputs. The Piccolo–XR unit can operate DC latch solenoids (outputs), read status and calculate flow of dry contact meters (inputs).

The units are equipped with built-in radio for communication with the PIU.

The DIOS automatically builds communication network, using Store and Forward (S&F) technology, enabling the DIOS to cover areas larger than normally possible when using a single radio to communicate with the PIU.

Using the DIOS, the IRRInet system opens and closes stations (manually or automatically by irrigation programs), reads dry contact input status, calculates flow rate and accumulates pulses from water meters.

PIU - Piccolo Interface Unit

The Piccolo Interface Unit (PIU; see Figure 2) is connected to the IRRInet Field Unit (FU) via RS232 or RS485 serial ports.

Each PIU supports up to 256 Piccolo–XR units, with any available I/O combination, limited by the capacity of the IRRInet software only.

Utilizing the S&F technology and networking capabilities, the PIU can be linked to Piccolo–XR units positioned in distances of up to 1500-2000 meters (approx. 1 mile), depending on topography, antenna type and antenna installation.

The PIU is an interface between the Piccolo–XR and the IRRInet FU, which provides communication and networking operations only. (Monitor and control features are not included in the PIU.) That is: The control and monitor functions are provided either locally, by the Piccolo–XR or by an upper hierarchy unit (i.e. IRRInet FU).

The PIU is a portable device, which is most commonly used in the fixed installations enclosed with an indoor plastic housing.

The PIU must be installed by qualified and authorized technicians, so as to meet applicable safety standards and to ensure protection against weather hazards for the unit.

If the PIU will be connected to outdoor lines, an interface unit, complying with Clause 6 of the UL 60950 standard must be provided.

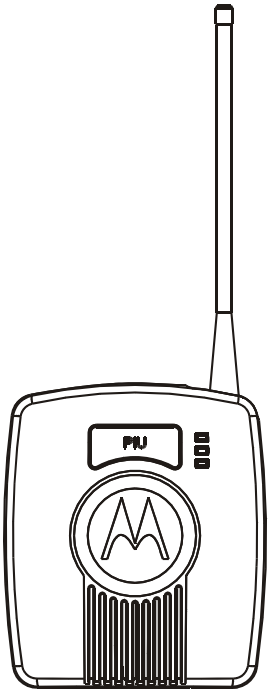

Figure 2
PIU – General View

Piccolo–XR

The Piccolo–XR is an intelligent, microprocessor based unit that can be used to monitor and control local units in a multi unit communication network. Piccolo–XR units communicate data to a PIU while functioning as intelligent nodes in Distributed I/O monitor and control systems. The Piccolo–XR is often used in irrigation and water distribution systems (i.e. irrigation valves, water meters, fertilizing meters, various sensors, flushing filters, and other non-irrigation devices).

The Piccolo–XR is ideal for use in applications where very low power consumption is essential. The Piccolo–XR is also available in an outdoor resistant housing (IP66), designed to resist harsh environment, such as exposure to sun, dust, and pouring rains.

Figure 3
Piccolo XR –General View

Safety Handling Instructions

For safety handling instructions, see the Product Safety and RF Energy Exposure Booklet for PIU and Piccolo XR Units, Motorola publication no. 6802974C70, which is distributed with the devices.

INSTALLATION

General

SAFETY SUMMARY

Caution

The PIU and Piccolo–XR must be installed by qualified and authorized technicians, specifically qualified to handle high voltage if the installation involves high-voltage connections/installations.

Caution

If the PIU will be installed outdoors, an outdoor plastic housing complying with UL60950 standard clause 6 is required.

Note! **See Piccolo–XR Screw Mounting Options (pg 19) for mounting details.**

Note! **This equipment is tested with specified length cables and in standard enclosure. If longer cables or a different enclosure are used, the installer is responsible to ensure that the installation complies with the requirements of the applicable standards.**

PIU Installation

PIU Dimensions

The unit dimensions are (see Figure 4):

- Width – 4.25" (108 mm),
- Height – 4.96" (126 mm),
- Height including antenna – 11.46” (291.1 mm),
- Depth – 1.67" (42 .6mm),
- Weight – 0.558 Lb (253g) maximum.

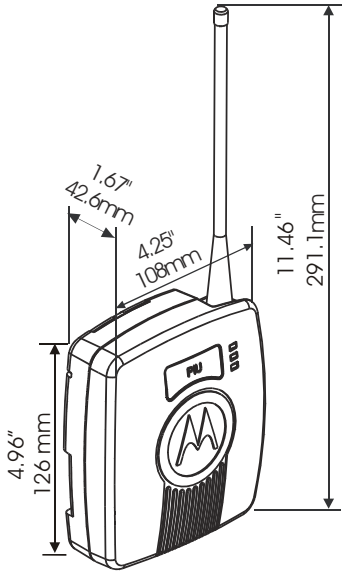

Figure 4
Dimensions of PIU Unit

The PIU is enclosed in a plastic housing, allowing 3 mounting options:

- Wall mount (Screws)
- Bracket mount
- DIN rail mount

Before installing the PIU, verify that there is sufficient space around the unit according to the specific installation.

Mounting the PIU On A Wall Using Screws

Secure two screws (not supplied) of maximum 0.37” (9.5 mm) head size to the wall, 3.256” (82.7 mm) apart. The wall-mounting template in Appendix D can be used to determine the space between both screws.

The screws must not protrude from the wall surface by more than 0.23” (6 mm) or by less than 0.16” (4 mm).

Attach the unit to the wall, fitting the two shaped cavities on the back cover of the unit over the screws and sliding it down. (See Figure 5.)

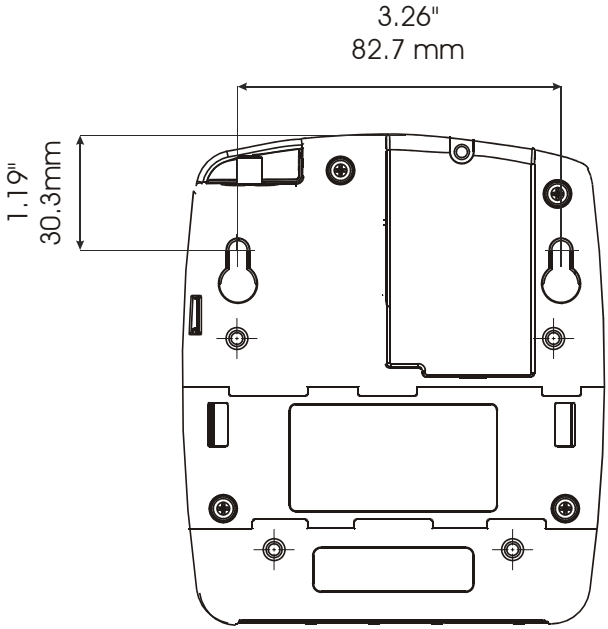

Figure 5
PIU Installation– Screw Mount dimensions

Mounting the PIU Using a Bracket

Using four M3x6 or M3x8 screws, attach a bracket (not supplied) to the back of the PIU. The upper two bracket holes must be 81 mm (3.19”) apart, and the lower two bracket holes must be 61 mm (2.40”) apart and 54 mm (2.13”) below the upper holes, as shown in Figure 6.

Attach the bracket to the mounting surface.

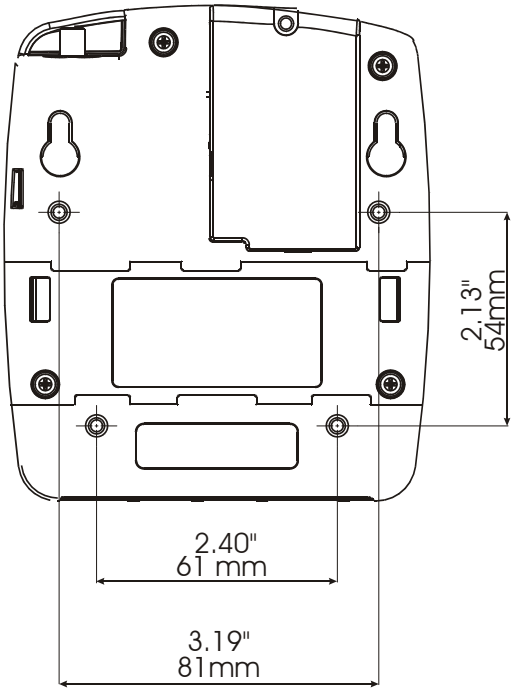

Figure 6
PIU Installation– Bracket Mount dimension

PIU DIN Rail Mounting

To mount the PIU on a DIN rail (not supplied), slide the PIU onto the rail at the grooves on the back of the unit. See Figures 7 and 8.

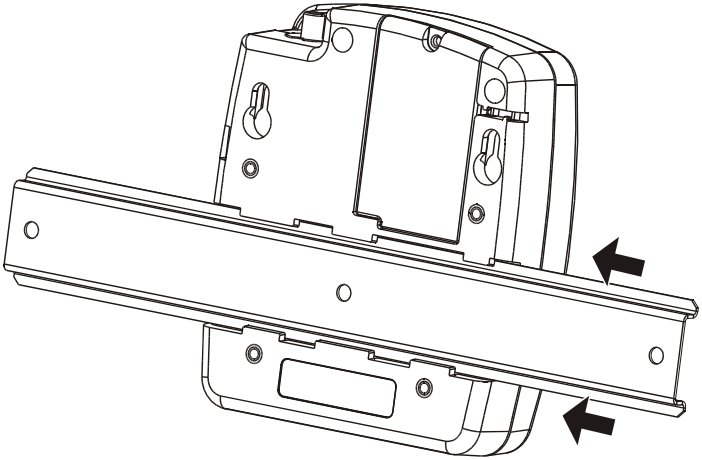

Figure 7
DIN Rail Attachment – Back View

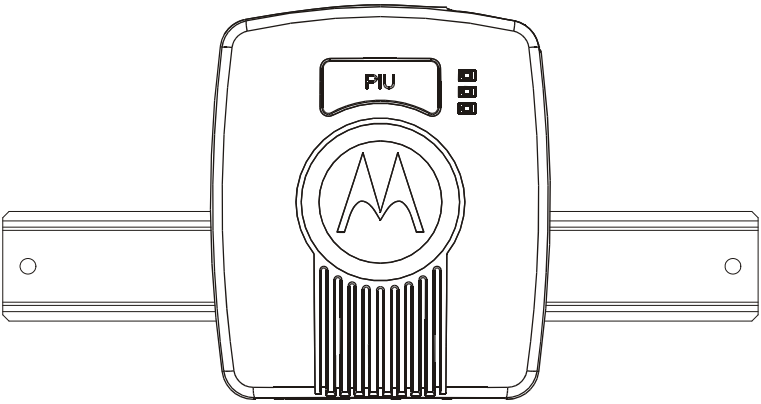

Figure 8
DIN Rail Attachment – Front View

PIU Electrical Connections

NOTE! Verify that all power connections are made in accordance with the applicable local standards.

PIU Ground Connections

Use the FKN8254A cable to connect the grounding cable directly to the TB connector of the PIU as shown in Figure 9.

NOTE! The grounding connector is also used as an ON/OFF switch, and the unit cannot be powered on without connecting it.

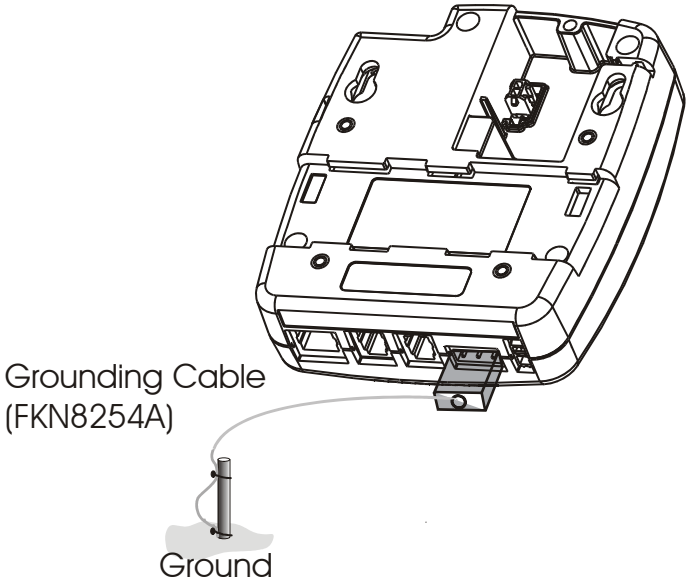

Figure 9
PIU Ground connection

Power Connection

The PIU can be powered by various types of supply sources:

- Internal (9VDC) battery;
- External 6V or 12V DC battery;
- Motorola power supplies – controllers. For example: IRRInet XL, IRRInet XM, IRRIcom, MOSCAD;
- 24VAC.

NOTE! The unit DC voltage range is 6 to 16 volts.

9VDC Internal Battery

Incorrect replacement of the battery can result in explosion! Replace only with the same or with an equivalent type of battery recommended by the manufacturer.

Dispose of used batteries according to the battery manufacturer instructions.

Place a standard 9VDC alkaline battery (not supplied) into the PIU battery chamber (see Figure10). Battery operation is applicable when operating the unit in a non-radio mode, e.g. when the PIU is used as an adapter.

Installation of an Internal Battrey

Release the screw at the top of the battery chamber door, and slide the door out, as shown in Figure 10.

Connect the 9V battery cable (FKN8204A) to the DC power input connector on the back of the unit.

Connect the 9V DC battery to the cable.

Place the 9V DC alkaline battery in the chamber as shown in Figure 10.

Close the battery chamber door and secure with the screw.

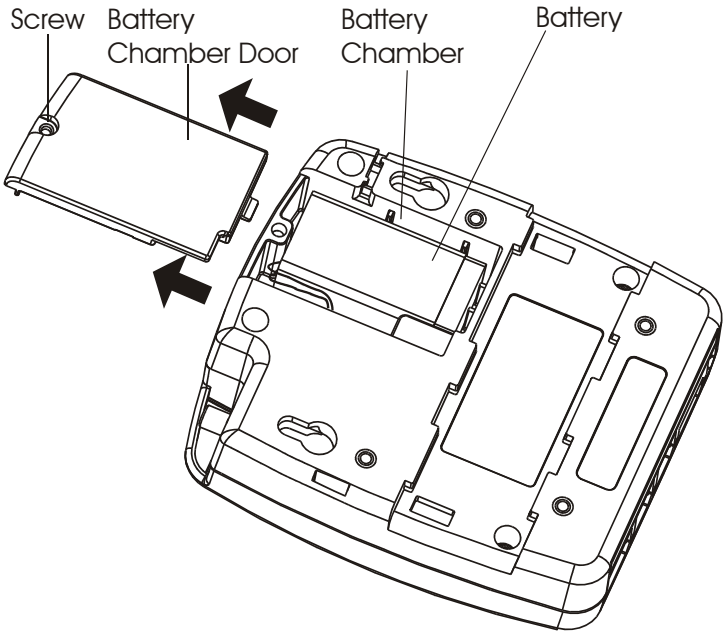

Figure 10
PIU Battery Chamber

External Battery Power Connections

Caution

The unit must be powered by a limited power source in accordance with standard UL/IEC 60950-1.

This connection is used for normal operation of the PIU, when radio communication is required, or when RS485 or RS232 ports are used.

Release the screw at the top of the battery chamber door and slide the door out, as shown in Figure 10.

Connect the DC Adapter board (FCN6538A) to the DC power input connector on the back of the unit (Figure 11).

Connect the FKN8250A 7 ft cable to the DC Adapter board.

Connect the other cable end to an external 12VDC battery through 1A fuse (not supplied).

Close the battery chamber door and secure with the screw.

Error! Not a valid link.

Figure 11
PIU Unit – Rear View with DC Adapter

External Power Supply Connections

Use the applicable cable from the V152AH PIU installation kit to connect the PIU to Motorola standard controller power supply.

Release the screw at the top of the battery chamber door and slide the door out, as shown in Figure 10.

Connect one end of the cable to the DC power input connector on the back of the unit.

Connect the other end of the cable to the power supply output of a Motorola controller.

Close the battery chamber door and secure with the screw.

24VAC Power Connections

Caution

The PIU must be connected to a power source equivalent to one or more of the following:

a. A listed Direct plug-in unit.
b. A Class II power source (defined by the National Electrical Code (NEC) and the Canadian Electrical Code (CEC).
c. A power source that complies with UL1950 C1.2.1 or UL60950 C1.2.5.

Caution

The unit must be powered by a limited power source in accordance with standard UL/IEC 60950-1.

Connect the FKN8264A cable to the 24 V AC PWR IN connector as shown in Figure 12.

Connect the other end of the cable to the 24 V AC connection of a 110 V AC/220 V AC transformer (not supplied) through a 1 A fuse (not supplied).

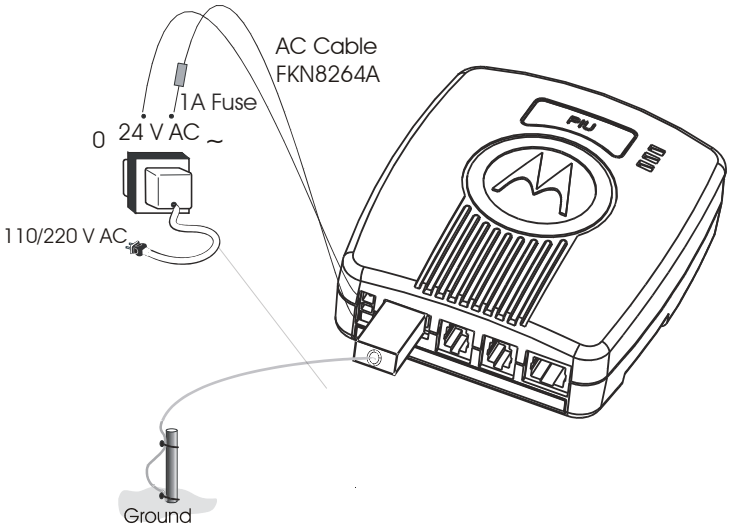

Figure 12
24VAC Power In Connection

PIU Antenna Connection

Flexible Antenna: Attach the flexible monopole antenna to the antenna connector at the top of the unit. See Appendix C for detailed information.

Pole Antenna: Attach the FKN8258A antenna cable to the antenna connector at the top of the unit. Connect the other end of the antenna cable to the pole antenna. See Appendix C for detailed information

Piccolo–XR Installation

Piccolo–XR Dimensions

The unit dimensions are (see Figure 13):

- Width – 4.6" (117 mm)
- Height – 5.00" (127 mm)
- Hight including antenna – 11.46” (291.1 mm)
- Depth –1.63" (41.5mm)
- Weight – 3.3 lb (240 gr) maximum.

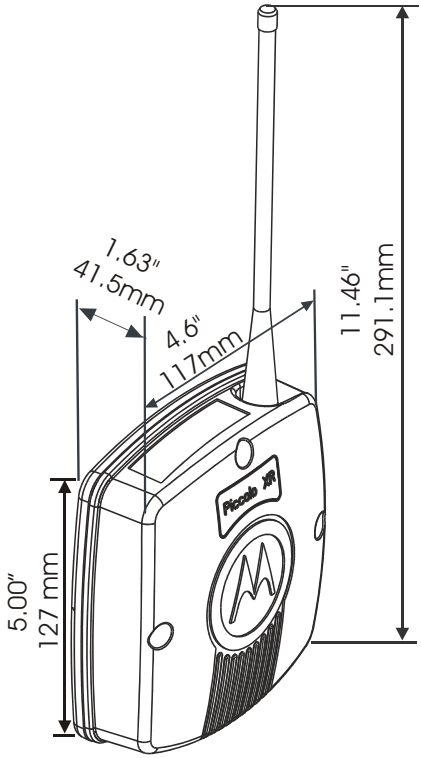

Figure 13
Dimensions of the Piccolo–XR Unit

The Piccolo–XR unit can be attached to any vertical or horizontal surface using screws. Before mounting the Piccolo–XR, verify that sufficient clearance is left around the unit. Allow 7.87" (20 cm) clearance off the bottom of the Piccolo–XR case for the TB connectors and 6.3" (16 cm) off the top of the unit for the flexible antenna.

Piccolo–XR Screw Mounting Options

Mount the Piccolo–XR on a vertical surface as follows:

Secure the unit to any vertical surface using one 0.35" (9 mm) maximum head screw. Use the mounting hole marked A in Figure 14 to attach it to the mounting surface. See figure 15 B.

Mount the Piccolo–XR on a horizontal surface as follows:

Secure the unit to any horizontal surface using two 0.35" (9 mm) maximum head screws. Use the mounting holes marked B and C in Figure 14 to attach it to the mounting surface. See Figure 15 A.

Mount the Piccolo–XR on a wide plane as follows:

Secure the unit to any plane using three 0.35" (9 mm) maximum head screws. Use all three mounting hole marked A, B and C in Figure 14 to attach it to the mounting surface. See figure 15 C.

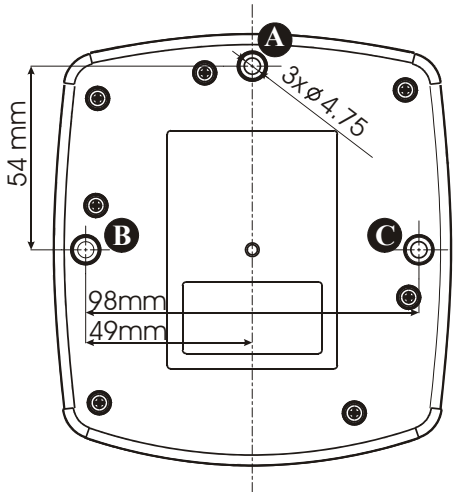

Figure 14
Piccolo–XR Mounting Screw holes – Back View

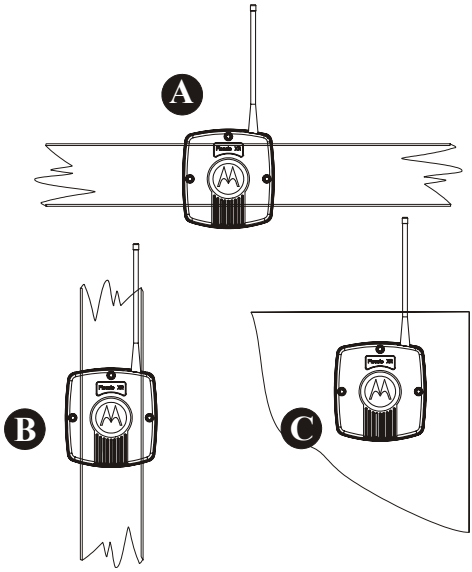

Figure 15
Piccolo–XR Mounting Options

Piccolo–XR Electrical Connections

NOTE! Verify that all power connections are made in accordance with the applicable local standards.

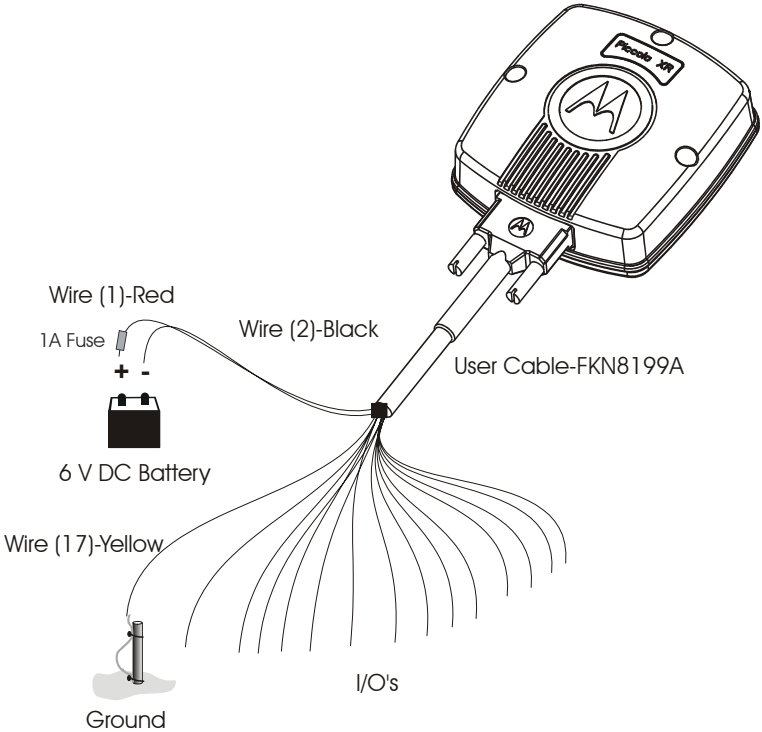

Figure 16
Piccolo–XR Ground and DC Power Connections

Piccolo–XR Ground Connections

Connect the yellow wire (17) of the FKN8199A user cable to the PGND, as shown in Figure 16.

Power Connections

Caution

The unit must be powered by a limited power source in accordance with standard UL/IEC 60950-1.

The Piccolo–XR is powered by an external 6 V DC battery source.

Use the FKN8199A cable to connect the Piccolo–XR to an external battery. Connect Wire #1 (red) to the positive (+) pole of the battery through a 1 A fuse (not supplied) and wire #2 (black) to the battery negative (–) pole. See Figure 16.

I/O Connections

The Piccolo–XR RTU can control up to four DC Latch Solenoids.

The solenoid operating voltage can vary in the range of +9 to +20V DC (defined by the site configuration definition in the DIOS Service Toolkit).

The Piccolo–XR also responds to back indication signals from a maximum of eight different field input sensors.

The available I/O module options are as follows:

1 DI / 1 DO

2 DI / 2 DO

4 DI / 4 DO

7 DI / 1DO

8 DI / 0DO

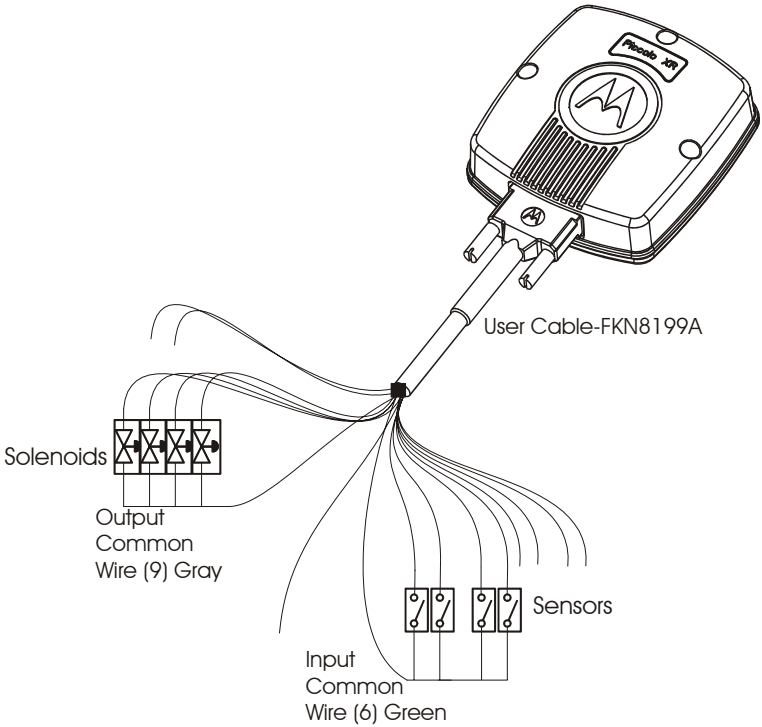

Figure 17
Piccolo–XR I/O Connections

NOTE! For proper operation, the Piccolo–XR unit must be connected either to a flexible antenna or to a pole antenna. See Appendix C for antenna installation details.

Table 1: Pin assignment of the Piccolo–XR user cable (FKN8199A) Connector

PIN No	**COLOR**	**DESCRIPTION**
1	Red	Battery 6V (+)
2	Black	Battery 6V (–)
3	Brown	Solenoid 2
4	Orange	Input 3
5	White	Input 4
6	Green	Input Common
7	Blue	Solenoid 3
8	Violet	Solenoid 4
9	Gray	Solenoid Common
10	Pink	Solenoid 1
11	Light Green	Input 7
12	Black/White	Input 8
13	Brown/White	Input 1
14	Red/White	Input 2
15	Orange/White	Input 5
16	Green/White	Input 6
17	Yellow	PGND (Chassis)

Table 2: Pin assignment of the Piccolo–XR user cable (FKN8199A) Connector

DESCRIPTION	**PIN No**	**COLOR**
Input 1	13	Brown/White
Input 2	14	Red/White
Input 3	4	Orange
Input 4	5	White
Input 5	15	Orange/White
Input 6	16	White/Green
Input 7	11	Light Green
Input 8	12	Black/White
Input Common	6	Green
Solenoid 1	10	Pink
Solenoid 2	3	Brown
Solenoid 3	7	Blue
Solenoid 4	8	Violet
Solenoid Common	9	Gray
Battery 6V (+)	1	Red
Battery 6V (–)	2	Black
PGND (Chassis)	17	Yellow

THE DIOS PIU AND PICCOLO-XR UNITS

PIU Overview

The PIU unit (see Figure 18) is comprised of the following:

- Internal radio interfaces and a radio modem
- A logic board
- Communication ports

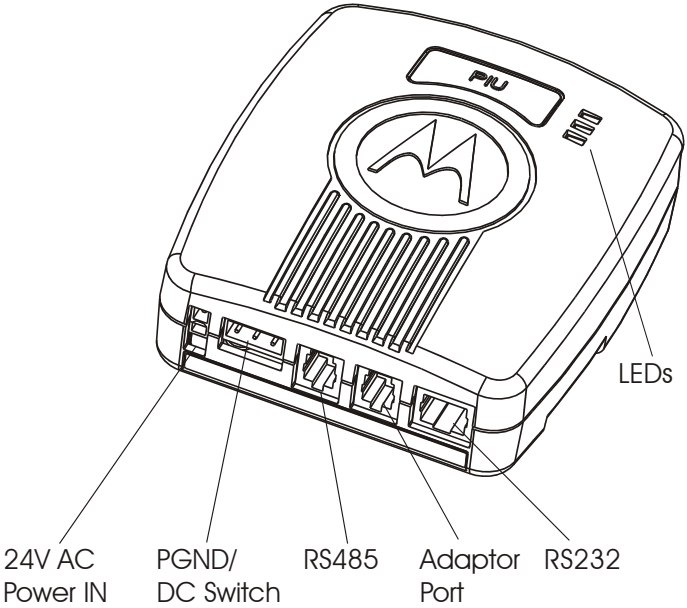

Figure 18
PIU Unit General View

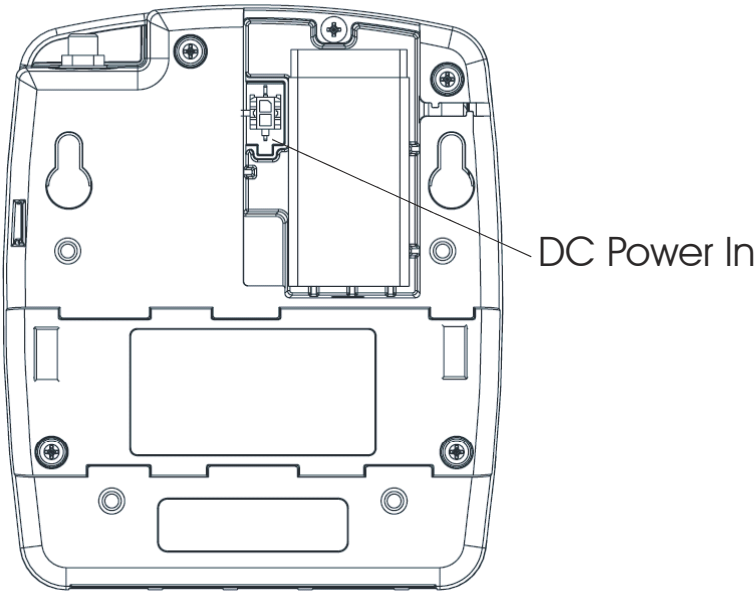

Figure 19
PIU Unit DC Power Connection– Rear View

PIU Communication Ports

The PIU has four ports:

NOTE! Only one of the two RS ports (232 and 485) can be operated at a time, i.e. they do not operate together.

- RS485: Communication between multiple PIU units and the FU.
- RS232: Communication between the PIU and the FU; Configuration Port (unit programming and monitoring).
- Adapter port: Communication with and programming the Piccolo-XR units.
- Internal Radio interface: internal DPSK modem.

PIU Connectors

The PIU connectors (see Figure 18):

- RS232 (RJ45, 8 pin)
- RS485 (RJ10, 4 pin)
- Adapter port (RJ10, 4 pin)
- PGND And Power Switch (TB 3 pin)
- 24 V AC PWR IN (2 pin)
- 6, 9, 12 V DC Battery Input (2 pin)

PIU LED Operation

Three software programmable LED indicators are located on the PIU enclosure (see Figure 18). These indicators can be used for diagnostics purposes.

- Radio TX/RX (RED): ON – a valid frame is received by the internal DPSK modem or the PIU transmits a frame.
- RS232/RS485 RX/TX (ORANGE): ON – a valid frame is received or transmitted through the RS232/RS485 port (UART1).
- Adapter port TX/RX (GREEN): ON – a valid frame is received or transmitted through the adapter port (UART2), or the Radio is being programmed.

PIU Adapter Operation

The PIU can be used as an adapter to perform the following functions:

- Communicating with the Piccolo–XR for configuration, monitoring or hardware test.
- Downloading new software to a Piccolo–XR unit.
- Downloading new software to a PIU unit.

PIU Portable Use

Use the PIU adapter while holding it in your hand (see Figure 20) or using a holster (see Figure 21).

Figure 20
PIU hand held use.

Figure 21
Holster with a PIU.

Communicating With a Piccolo–XR Unit

1. Connect the PIU adapter RS232 port to the computer with the FTN6597A cable (see Figure 22).
2. Connect the PIU adapter unit to an external 12VDC battery or to an internal 9V battery. (See page 13 for power options).
3. Connect the Piccolo–XR unit to an external 6VDC power source. (See Power Connections on page 23.)
4. Use the P5 connector (communication) of the FKN8177A cable to connect the Piccolo–XR unit to the Adapter port of the PIU unit.
5. Use the Distributed I/O Service Toolkit to configure and monitor the Piccolo–XR or to test its hardware.

For additional information, please refer to the online help of the DIOS Service Toolkit.

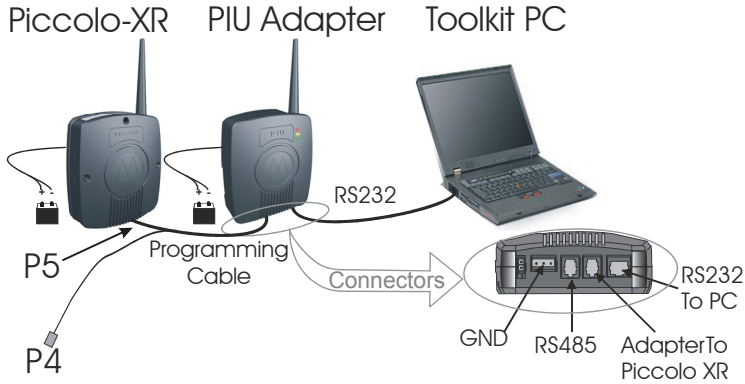

Figure 22
PIU Adapter – Piccolo–XR Communication Mode Connections

NOTE! The grounding connector is also used as an ON/OFF switch, and the unit cannot be powered on without connecting it. (See Figure 9.)

Downloading new software to a Piccolo–XR unit.

1. Connect the PIU adapter RS232 port to the computer using the FTN6597A cable (see Figure 23).
2. Connect the PIU adapter unit to an external 12VDC battery or to an internal 9V battery. (See page 13 for power options).
3. Connect the Piccolo–XR unit to an external 6 V DC power source. (See Power Connections on page 23.)
4. Use the P4 connector (programming) of the FKN8177A cable to connect the Piccolo–XR unit to the Adapter port of the PIU unit.
5. Use the Distributed I/O Service Toolkit Downloader.

For additional information, please refer to the online help of the DIOS Service Toolkit.

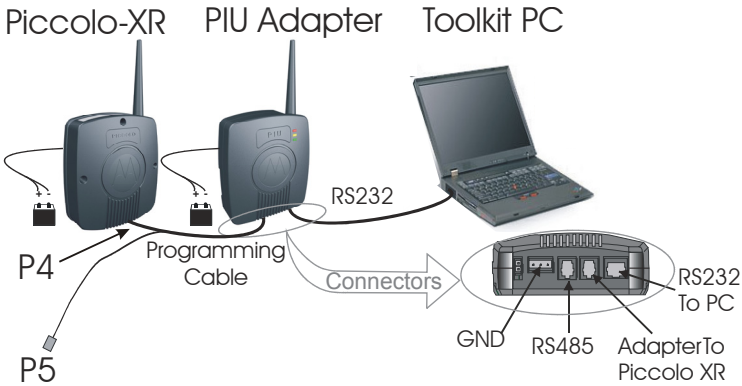

Figure 23
PIU Adapter – Piccolo–XR Downloading Mode Connections

NOTE! The grounding connector is also used as an ON/OFF switch, and the unit cannot be powered on without connecting it. (See Figure 9.)

Communicating with a PIU unit

1. Connect the PIU unit RS232 port to the computer with the FTN6597A cable (see Figure 24).
2. Connect the PIU unit to an external 12VDC battery or to an internal 9V battery. (See page 13 for power options.)
3. Use the Distributed I/O Service Toolkit for configuration, monitoring or hardware test.

For additional information, please refer to the online help of the DIOS Service Toolkit.

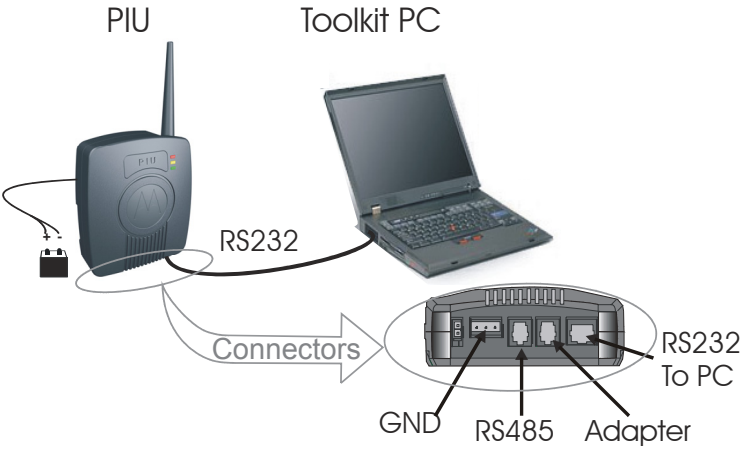

Figure 24
PIU Adapter – PC Communication Connections

NOTE! The grounding connector is also used as an ON/OFF switch, and the unit cannot be powered on without connecting it. (See Figure 9.)

Downloading new software to a PIU.

1. Connect the PIU adapter RS232 port to the computer with the FTN6597A cable (see Figure 25).
2. Connect the PIU adapter to an external 12VDC battery or to an internal 9V battery. (See page 13 for power options).
3. Connect the PIU unit to an external 12VDC battery or to an internal 9V battery. (See page 13 for power options)
4. Use the FKN8203A cable to connect the Adapter port of the PIU unit to the RS232 connector of the PIU unit to be programmed.
5. Use the Distributed I/O Service Toolkit Downloader.

For additional information, please refer to the online help of the DIOS Service Toolkit.

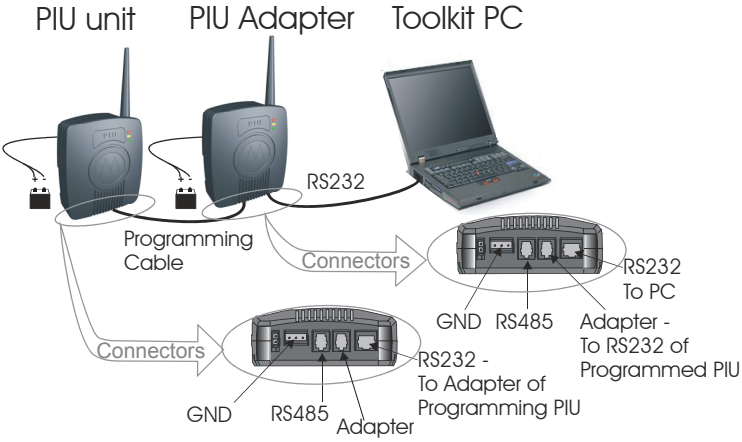

Figure 25
PIU Adapter Programming Mode Connections

NOTE! The grounding connector is also used as an ON/OFF switch, and the unit cannot be powered on without connecting it. (See Figure 9.)

Piccolo-XR Overview

The Piccolo -XR Remote Terminal Unit (RTU) is comprised of:

– Logic board, which includes:

- I/Os
- Radio interface
- Power supplies
- Communication ports

– Radio

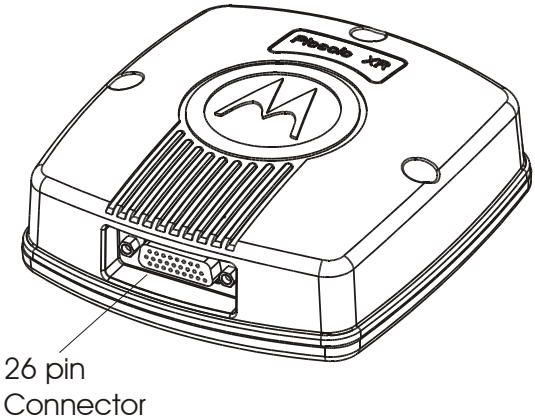

Figure 26
Piccolo-XR Unit

Piccolo-XR Communication Ports

The Piccolo-XR has three ports:

- Programming port: for downloading SW.
- UART Port: Configuration Port (for programming and monitoring the unit)
- Internal Radio interface: internal DPSK modem.

Piccolo-XR Connector

The Piccolo -XR has one D-type 26 pin connector (see Figure 26). See Table 1 and Table 2 on pages 25–26 for more information

Input/Output options

A variety of I/O options is available for use with the Piccolo-XR, increasing the system flexibility.

The available Piccolo-XR I/O options are:

- 1 DI / 1 DO (Option V608AC)
- 2 DI / 2 DO (Option V379AH)
- 4 DI / 4 DO (Option V118AG)
- 7 DI / 1DO (Option V115AL)
- 8 DI / 0DO (Option V508AD)

APPENDIX A: PIU AND PICCOLO-XR SPECIFICATIONS

PIU Specifications

Environmental

Operating Temperature	-30 °C to +60 °C (-22 °F to +140 °F)
Storage Temperature	-40 °C to +85 °C (-40 °F to + 185 °F)
Relative Operating Humidity	0 to 95% without condensation @ +50 °C (122 °F)
Operating Altitude	-400 m to +4000 m (-1300 ft to 13,000 ft) above sea level

Mechanical

Dimensions	126x108x42.6 mm ± 1 mm (4.96”x4.25”x1.67”)	
Weight	253 gr ± 25 gr (8.9 oz ± 0.9 oz)	
User Connection	RS232	(RJ45)
	Adapter port	(RJ10)
	RS485	(RJ10)
	PGND and DC switch	(TB 3 PIN)
	24 VAC	(Molex header 2 PIN)
	6V, 9V, 12V DC BAT IN	(Straight 2 PIN)

PIU Board

Communication Ports	
RS232	Serial RS-232
RS485	Multi Drop 2 Wire
Adapter	Serial interface between PIU as adapter and PICCOLO–XR (UART levels)
Boot-Strap	Software programming port
Internal Radio	
RF Frequency	UHF 450–470 MHz (Service Toolkit programmable)
Channel spacing	12.5 KHz
Internal Modem	DPSK 1200
TX RF Low power mode:	8 – 12 mW @+25 °C (+77 °F)
	5 – 16.3 mW @–30 °C - +60 °C (-22 °F to 140 °F)
TX RF High power mode:	80 – 120 mW @+25 °C (+77 °F)
	50 – 120 mW @–30 °C - +60 °C
Frequency Error:	± 0.0001% max.
TX deviation:	2KHz ± 15%
RX BER	BER<1% (See Note 5 on p. 43)
LEDs	Red, Orange, Green (SW Programmabale)

Power

Input Voltage

External Source (DC Power In)	6.00 to 16.00 VDC
External Source (24V ~ IN)	24VAC±20%

Power Modes

Adapter Mode (Using the internal 9 V battery)

Normal Operation	1 – 5 mA	(See Note 4 on p. 43)
Sleep Mode		
LPM0	250 – 400 µA	(See Note 1 on p. 43)
LPM3	140 – 290 µA	(See Note 1 on p. 43)
Power Fail Mode		
LPM3	270 – 850 µA	(See Note 3 on p. 43)

PIU Mode (Using a 12 V or 6 V external power source)

Radio Transmission

(TX power-10 mW)	25 – 40 mA	(PWR IN =14 V)
	65 – 90 mA	(PWR IN = 6 V)
(TX power-100 mW)	30 – 65 mA	(PWR IN =14 V)
	85 – 135 mA	(PWR IN = 6 V)

Standby current

Radio Receives	13 – 18 mA	(PWR IN =14 V)
	30 – 38 mA	(PWR IN = 6 V)

Sleep Mode

LPM0	200 – 320 µA (See Note 2 on p. 43)
LPM3	130 – 250 µA (See Note 2 on p. 43)

Power Monitors

Power OK Voltage	(Service Toolkit Adjustable Default = 12 V DC) ± 200 mV
LOW Power Voltage	(Service Toolkit Adjustable Default = 11.2 V DC) ± 200 mV
Very Low Battery	(Service Toolkit Adjustable Default = 10.8 V DC) ± 200 mV
Reverse Input Voltage Connection	Protected

Note 1: Power In = 9 V DC (Adapter), RS232 = shutdown, RS485 = disable, Radio (On Board Circuits) = off, internal Radio is off. RS232 cable connected.

Note 2: Power Supply = 14 V DC (PIU), RS232 = shutdown, RS485 = disable, Radio (On Board Circuits) = off, internal Radio is off. RS232 cable connected.

Note 3: Power In = 5.4 V DC (Power fail), RS232 = shutdown, RS485 = disable, Radio (On Board Circuits) = off, internal Radio is off. RS232 cable connected.

Note 4: Power In = 9 V DC (Adapter), RS232 = auto shutdown, RS485 = disable, Radio (On Board Circuits) = off, internal Radio is off. RS232 cable connected.

Note 5: Apply 1.2 KHz FM signal with 2 KHz Deviation, Sensitivity @–110 dBm to the radio, and read BER. At extreme temperatures apply –104 dBm.

PICCOLO XR Specifications

Environmental

Operating Temperature	-30 °C to +60 °C (-22 °F to +140 °F)
Storage Temperature	-40 °C to +85 °C (-40 °F to + 185 °F)
Relative Operating Humidity	0 to 95% without condensation @ +50 °C (122 °F)
Operating Altitude	-400 m to +4000 m (-1300 ft to 13,000 ft) above sea level
Housing	IP66

Mechanical

Dimensions	127x117x41.5 mm ± 1 mm (5.00”x4.60”x1.63”)
Weight	240 gr ± 24 gr (8.5 oz ± 0.85 oz)
User Connection	17 pin User Cable (26 pin D-type connector)
Wire Gage	22 AWG

PICCOLO XR Board

INPUTS:

Number of Inputs	Modularity: 1, 2, 4, 7, 8
Dry contact Input Ratings	Open: > 45 kΩ (OFF) Closed: < 6 kΩ (ON)
Minimum pulse width	100 msec
Maximum pulse rate	7200 pulses per hour

OUTPUTS:

Number of Outputs	Modularity: 1, 2, 4
Output Drive Voltage	9 - 20 Volts (± 10%) (Service Toolkit Adjustable)- 2200 µF capacitor
Output Short Circuit Protection	>5 A

Communication Ports

UART 1 port	Serial port uart levels (Async.)
UART 2 port	Serial port UART levels (Async.)
Bootstrap Port	Software programming port

Internal Radio

RF Frequency	UHF 450–470 MHz (Service Toolkit programmable)	
Channel spacing	12.5 KHz	
Internal Modem	DPSK 1200	
TX RF Low power mode:	8 – 12 mW	@+25 °C (+77 °F)
	5 – 16.3 mW	@–30 °C - +60 °C (-22 °F to 140 °F)
TX RF High power mode:	80 – 120 mW	@+25 °C (+77 °F)
	50 – 120 mW	@–30 °C - +60 °C
Frequency Error	± 0.0001% max.	
TX deviation	2KHz ± 15%	
RX BER	BER<1% (See Note 10 on p. 47)	

Power

Input Voltage

External Battery Source 4 to 7.8 V DC (See Note 11 p. 47)

Power Consumption (6 V battery operation)

Normal Operating Mode:

Radio Transmission

Radio Off	1.2 – 1.5 mA	(See Notes 6, 7 p. 47)
(TX power-10mW)	65 – 90 mA	(See Notes 8, 9 p. 47)
(TX power-100mW)	100 – 150 mA	(See Notes 8, 9 p. 47)
Radio Receives	30 – 40 mA	(See Notes 8, 9 p. 47)

Sleep Mode

LPM0	190 – 250 µA	(See Note 7 p. 47)
LPM3	40 – 65 µA	(See Note 7 p. 47)

Power Fail Mode
LPM3 40 – 70 µA (See Note 6 p. 47)

Power Monitors

Power In Report	± 200 mV
Power OK Voltage	(Service Toolkit Adjustable Default = 6 V DC) ± 200 mV
Low Power Voltage	(Service Toolkit Adjustable Default = 5 V DC) ± 200 mV
Very Low Battery	(Service Toolkit Adjustable Default = 4.8 V DC) ± 200 mV
Reverse Input Voltage Connection	Protected

Note 6: Power In = 4 V DC, Radio (On Board Circuits) = Off, internal Radio is off.

Note 7: Power In = 7.8 V DC, Radio (On Board Circuits) = Off, internal Radio is off.

Note 8: Power In = 5 V DC, Radio (On Board Circuits) = On, internal Radio is On.

Note 9: Power In = 7.8 V DC, Radio (On Board Circuits) = On, internal Radio is On.

Note 10: Apply 1.2 KHz FM signal with 2 KHz Deviation, Sensitivity @-110 dBm to the radio, and read BER. At extreme temperatures apply -104 dBm.

Note 11: For radio functionality external Power In minimum voltage=5 V

APPENDIX B: MODELS AND ACCESSORIES

General

The following tables describe the available models, options and accessories.

DIOS Models	Model
Piccolo Interface Unit (PIU)	F4604
Piccolo–XR DC	F4614

PIU Options	Option
INT: 12 VDC Operation (INDOOR)	V260AG
ADD: RS-485 Option (INDOOR)	V440AD
ADD: 12 VDC Operation (OUTDOOR)	V274BQ
ADD: RS-485 Option (OUTDOOR)	V186AC
ADD: RS-232 Cable 3 m	V666AA
ADD: RS-232 Cable 80 cm	V75EF
ADD: PIU Installation Kit	V152AH
ADD: Antenna for PIU	V208AF
ADD: PIU Adapter	V345AL
ADD: PIU DIOS Application	V377AD
INT: 12.5 KHz UHF Radio, 450–470 MHz	V347CC

Piccolo-XR Options	**Option**
ADD: 1 DI / 1DO Option	V608AC
ADD: 2 DI / 2DO Option	V379AH
ADD: 4 DI / 4DO Option	V118AG
ADD: 7 DI / 1 DO Option	V115AL
ADD: 8 DI / 0 DO	V508AD
ADD: Antenna for Piccolo–XR	V208AE
INT: 12.5 KHz UHF Radio, 450–470 MHz	V347CC

Accessories:	Kit number
TEC Programming & Monitoring Cable (26 pin)	FKN 8171A
Pole Antenna Kit (SMA TO SMA)	FAE5534A
Pole Antenna Kit (SMA TO N-TYPE)	FLN3373A

APPENDIX C: ANTENNA

General

The PIU and Piccolo–XR units can be connected either to a flexible or to a pole antenna.

The antenna connector (see Figure 27), located at the top of the unit, is used for both antenna types.

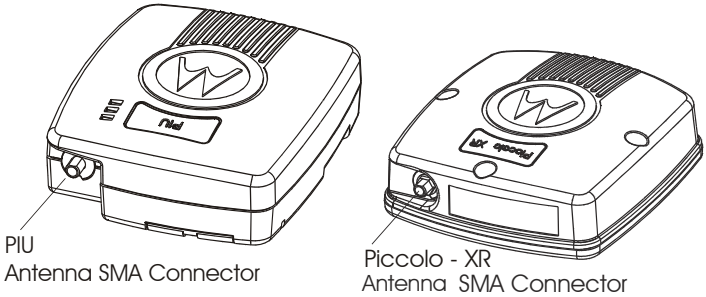

Figure 27
PIU and Piccolo–XR Antenna Connectors

Flexible Antenna Specifications

Frequency Range:	UHF
Polarization:	Vertical
Nominal Impedance:	50 ohms
VSWR:	1.5:1 max at resonance
Power Rating	50 watts

Temperature Range:-40ºC to +85ºC

Pole Antenna

The pole antenna installation must comply with the following requirements in order to ensure optimal performance and guarantee human exposure to radio frequency electromagnetic energy is within the guidelines set forth by the applicable local regulations.

The antenna must be mounted outdoors, preferably on a tower, if possible.

Building mounted antennas must be located on the building roof.

All fixed site antenna installations, including the installation of this pole antenna, require that, under the responsibility of the licensee, the installation site be managed in accordance with the applicable regulatory requirements. This may require taking additional compliance actions such as signage and site access restrictions in order to ensure that human exposure limits are not exceeded.

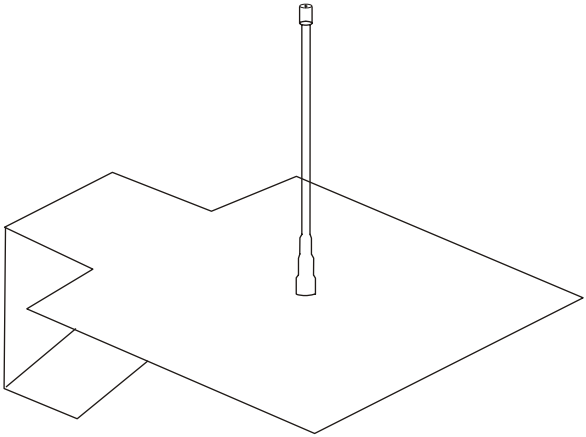

Figure 28
PIU/Piccolo–XR Pole Antenna

Pole Antenna installation

SMA to SMA option

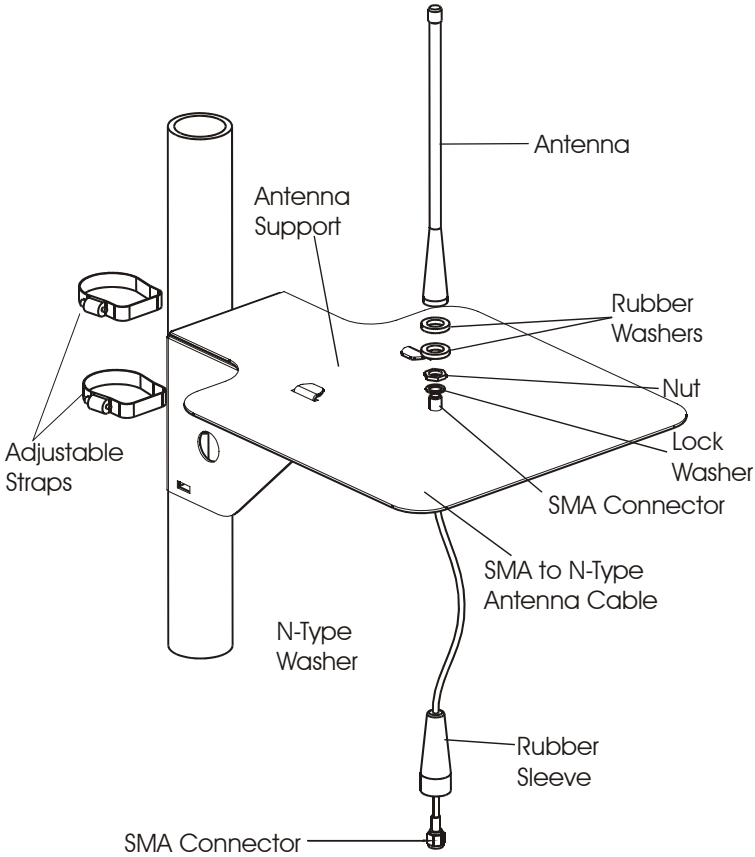

Figure 29
SMA To SMA type PIU/Piccolo–XR Pole Antenna

1. Connect a flexible antenna to the antenna support plate using rubber washers, lock washer and a nut (see Figure 29).
2. Connect one end of the SMA cable to the antenna connection.
3. Connect the other end to the PIU/Piccolo–XR.

SMA TO N-TYPE

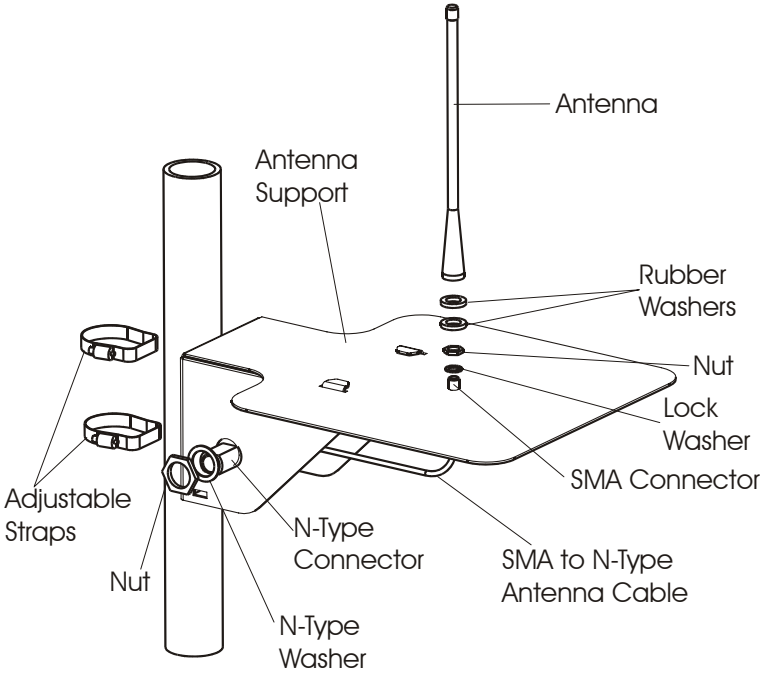

Figure 30
SMA to N Type Pole Antenna

1. Connect a flexible antenna to the antenna support plate using rubber washers, lock washer and a nut (see Figure 30).
2. Connect the SMA end of the cable to the antenna connection.
3. Connect the N Type end to the PIU/Piccolo–XR.

Pole Antenna Dimension

Figure 31 shows recommended dimensions for a supporting plate for the pole antenna.

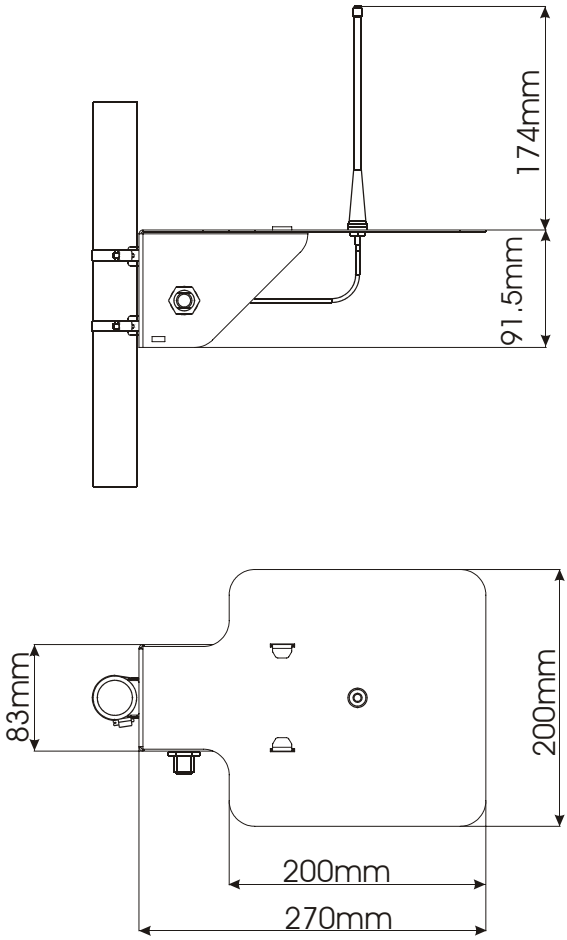

Figure 31
PIU/Piccolo–XR Pole Antenna Supporting Plate Dimensions

APPENDIX D: PIU/PICCOLO–XR MOUNTING TEMPLATES

Use the following template for PIU wall mounting.

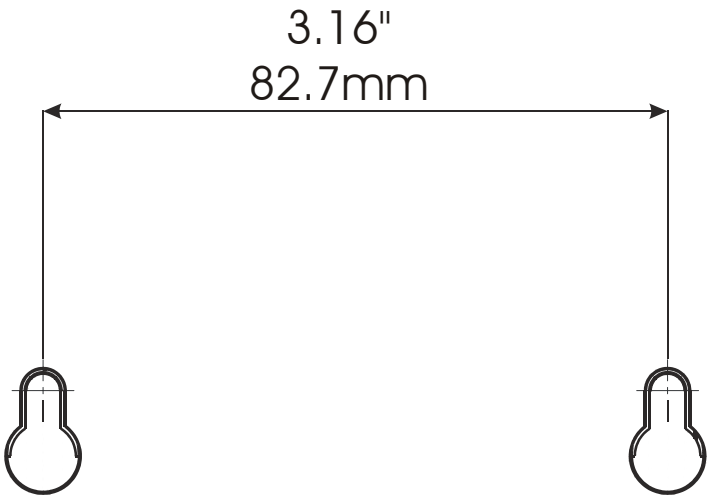

Figure 32
PIU Wall Mounting Template (Full Size)

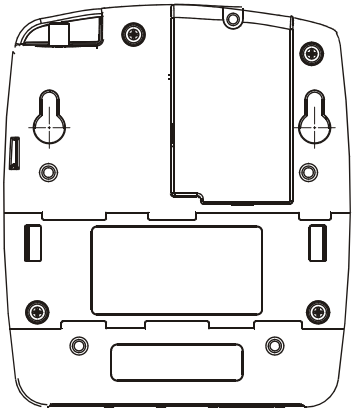

Figure 33
PIU Back

The following is a template that can be used for mounting the Piccolo–XR unit.

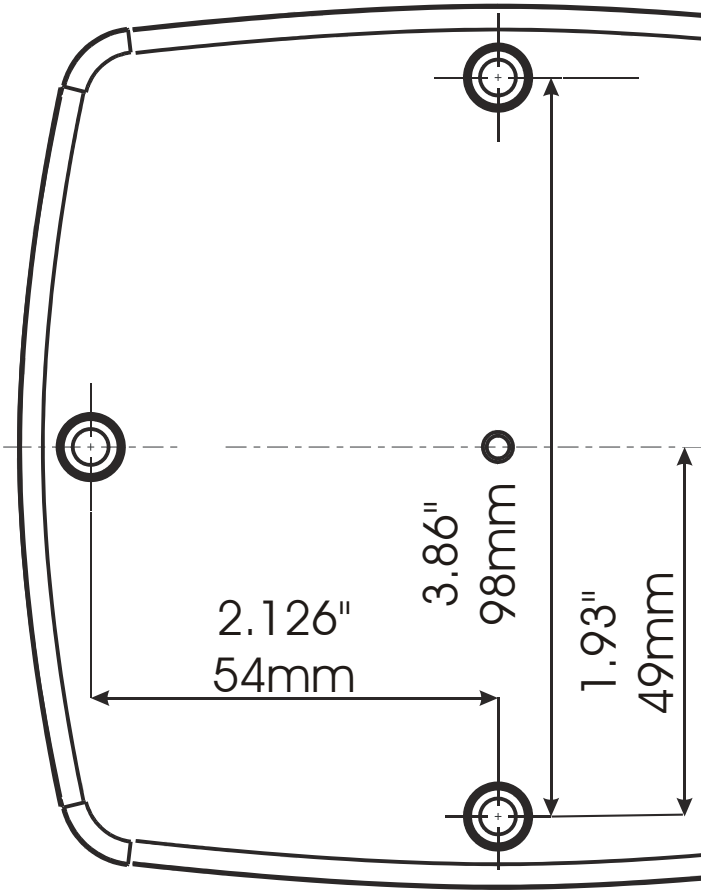

Figure 34
Piccolo–XR Mounting Template (Full Size)