EXHIBIT 9

INTERNAL PHOTOGRAPHS

(Pursuant to FCC Part 95A and 95B and RSS-210)

The following photographs are attached.		Exhibit
1.	RF board with Shields (Top)	9A
2.	RF board without Shields (Top)	9B
3.	RF board with Shields (Bottom)	9C
4.	RF board without Shields (Bottom).	9D
5.	RF board with chassis and housing (front side).	9E
6.	RF Board with chassis and housing (back side).	9F
7.	Exploded view of radio	9G

EXHIBIT 9A - RF board <u>with</u> Shields (Top)

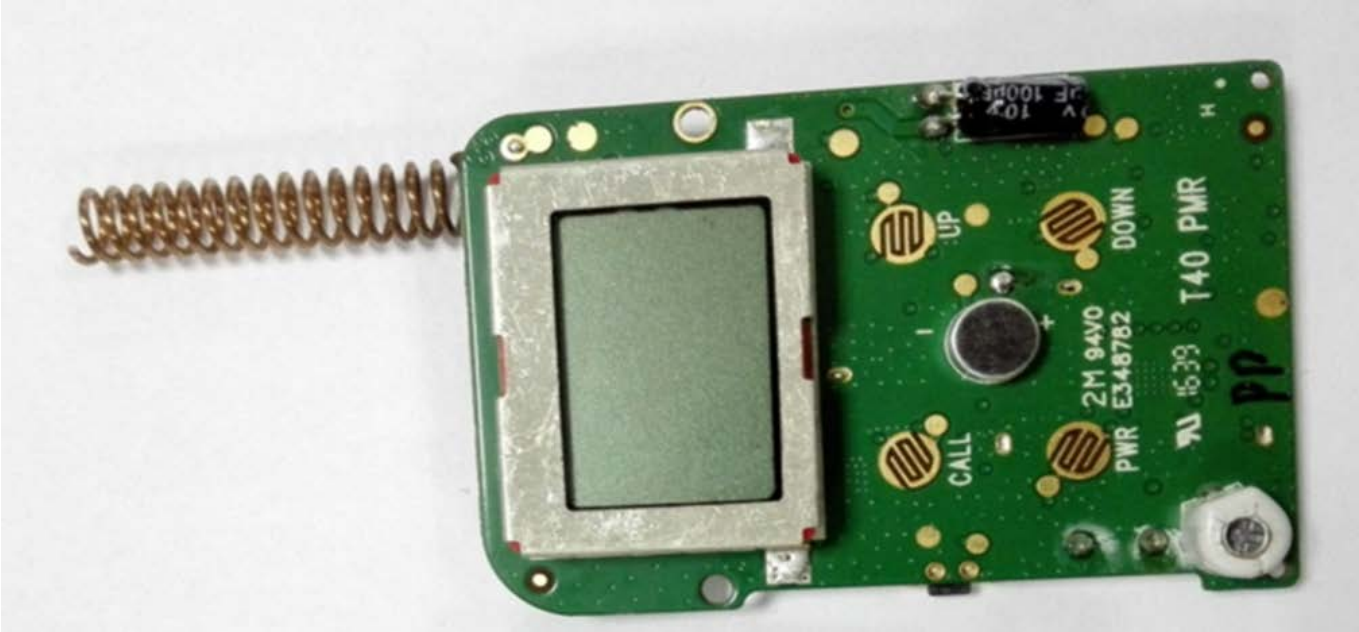

All models: T100, T107, T100TP, T100MC, T107MC, T100TMC

EXHIBIT 9B - RF board <u>without</u> Shields (Top)

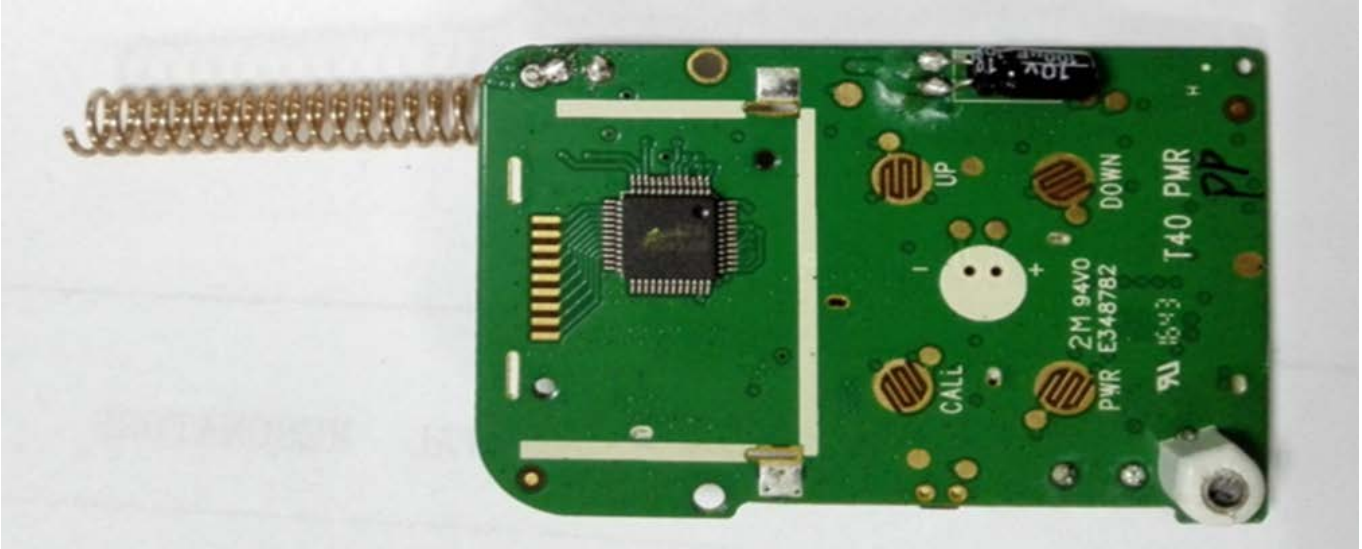

All models: T100, T107, T100TP, T100MC, T107MC, T100TMC

EXHIBIT 9C - RF board <u>with</u> Shields (Bottom)

All models: T100, T107, T100TP, T100MC, T107MC, T100TMC

EXHIBIT 9D - RF board <u>without</u> Shields (Bottom)

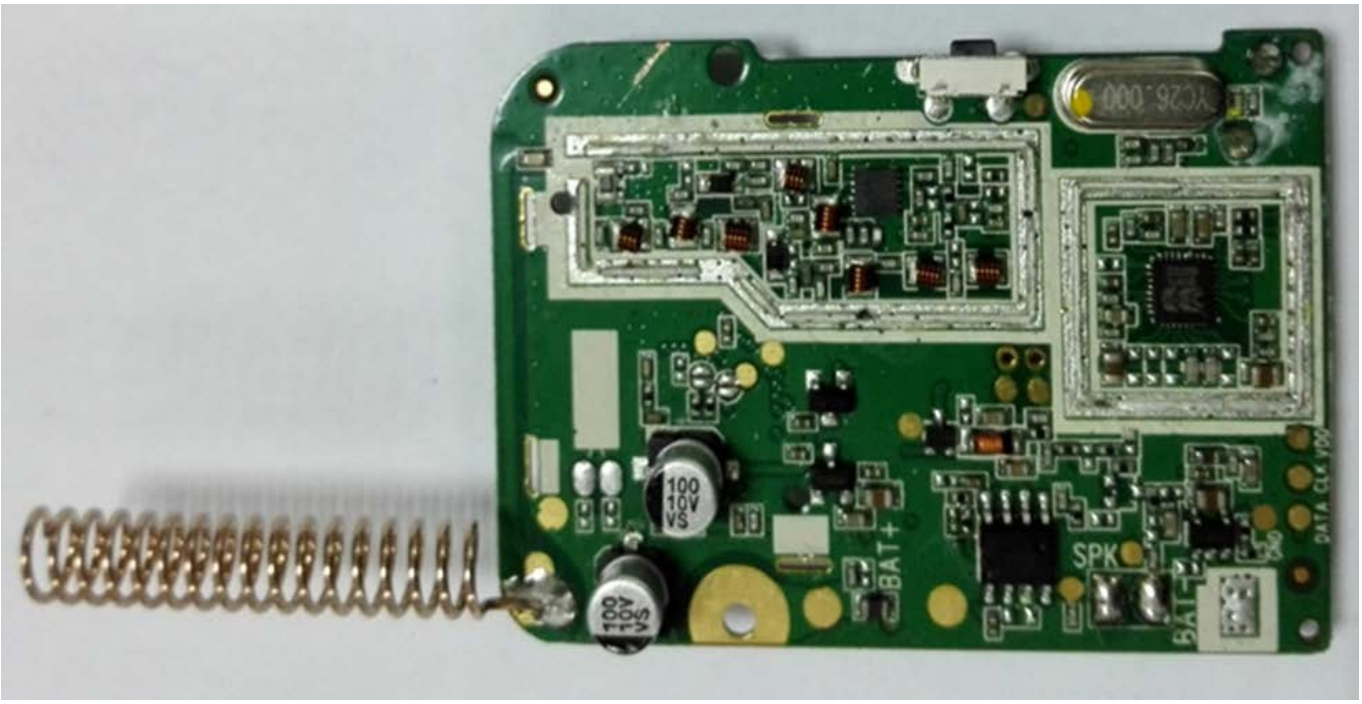

All models: T100, T107, T100TP, T100MC, T107MC, T100TMC

EXHIBIT 9E - RF board with chassis and housing (front side)

All models: T100, T107, T100TP, T100MC, T107MC, T100TMC

EXHIBIT 9F - RF board with chassis and housing (back side)

All models: T100, T107, T100TP, T100MC, T107MC, T100TMC

EXHIBIT 9G – Exploded view of radio

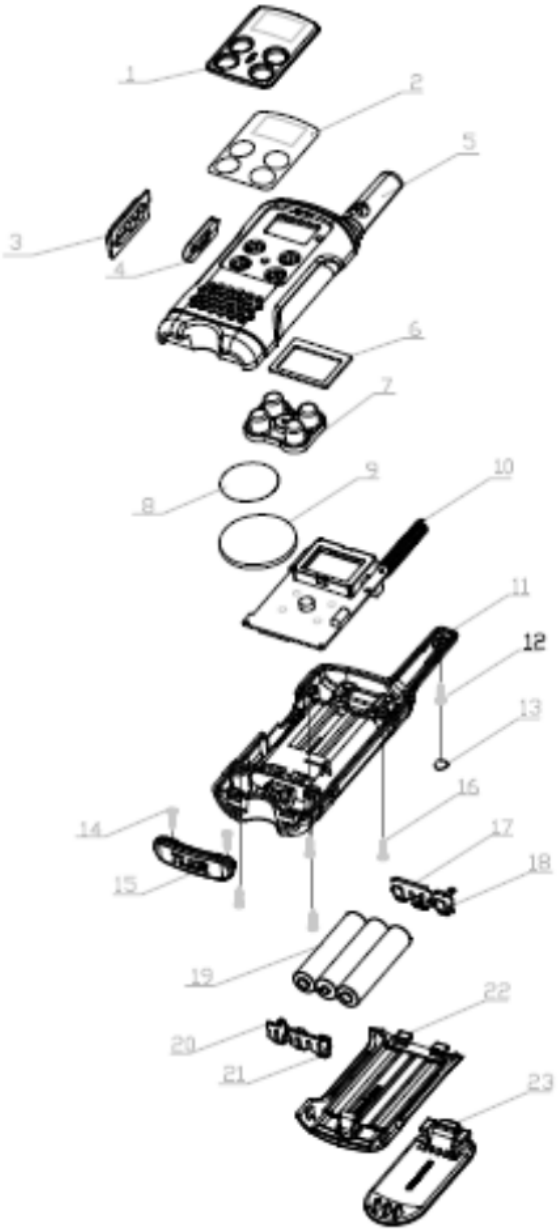

All models: T100, T107, T100TP, T100MC, T107MC, T100TMC