EXHIBIT 9

Internal Photographs

(Pursuant to FCC Part 2.1033(b)(7), 2.1033(c)(12) and RSP 100 Annex C)

The following photographs are attached.	Exhibit
1. RF board with Shields (Top)	9A
2. RF board without Shields (Top)	9B
3. RF board (Bottom)	9C
4. RF boards with chassis and housing for (Front Side)	9D
5. Chassis and housing (Back Side)	9E
6. Exploded View of Radio	9F

EXHIBIT 9A - RF board <u>with</u> Shields (Top)

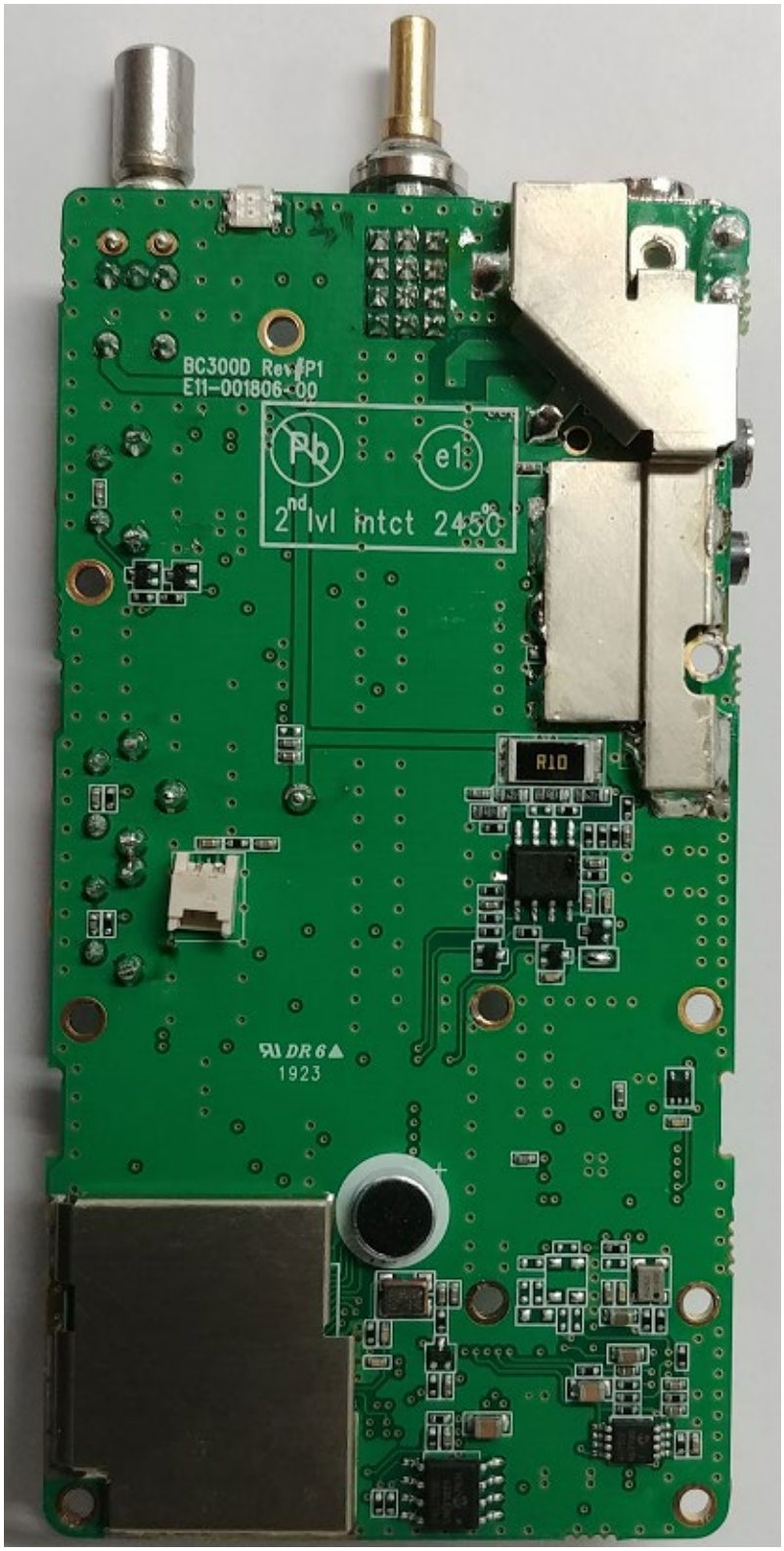

EXHIBIT 9B - RF board <u>without</u> Shields (Top)

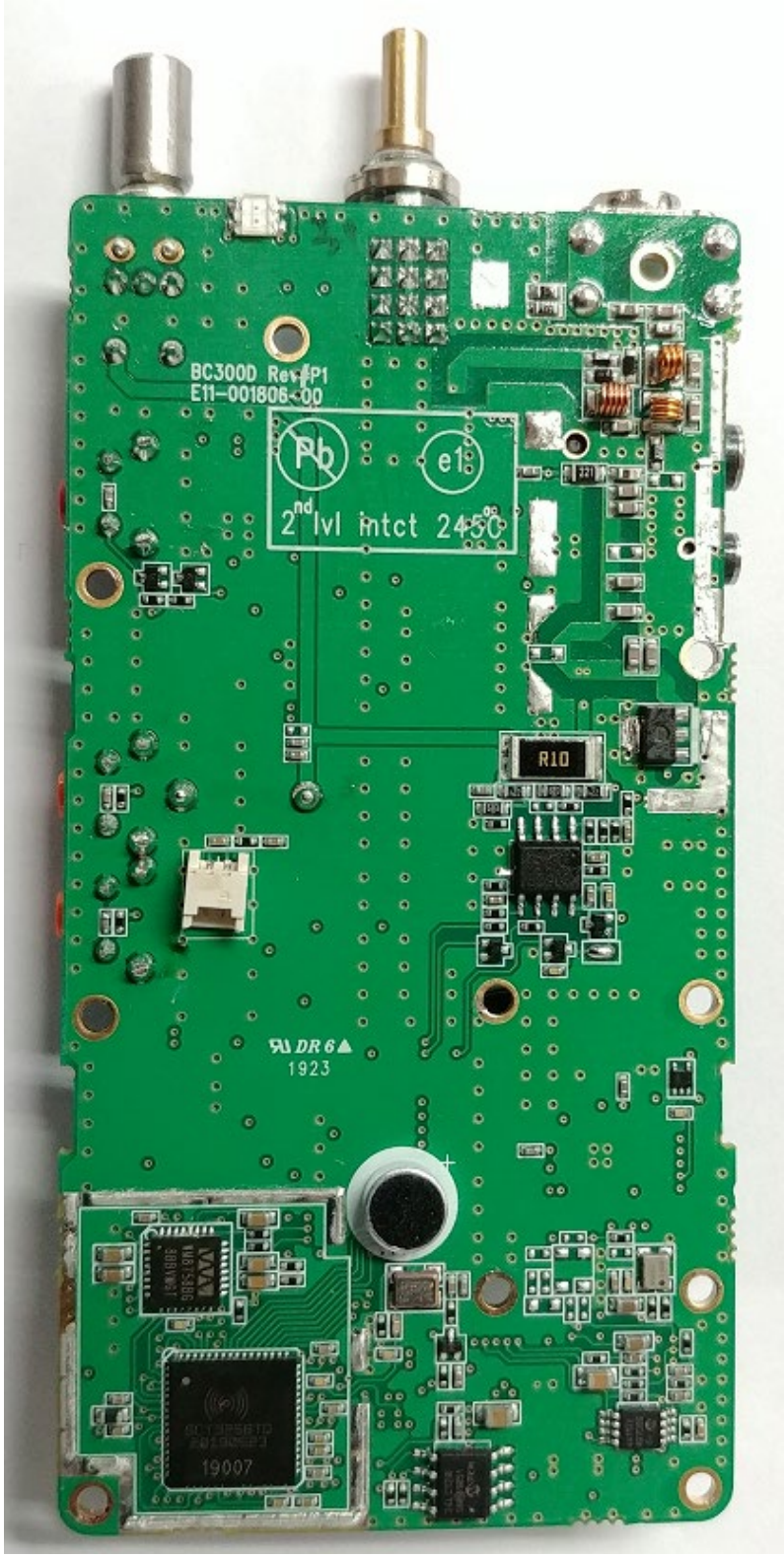

EXHIBIT 9C - RF board (Bottom)

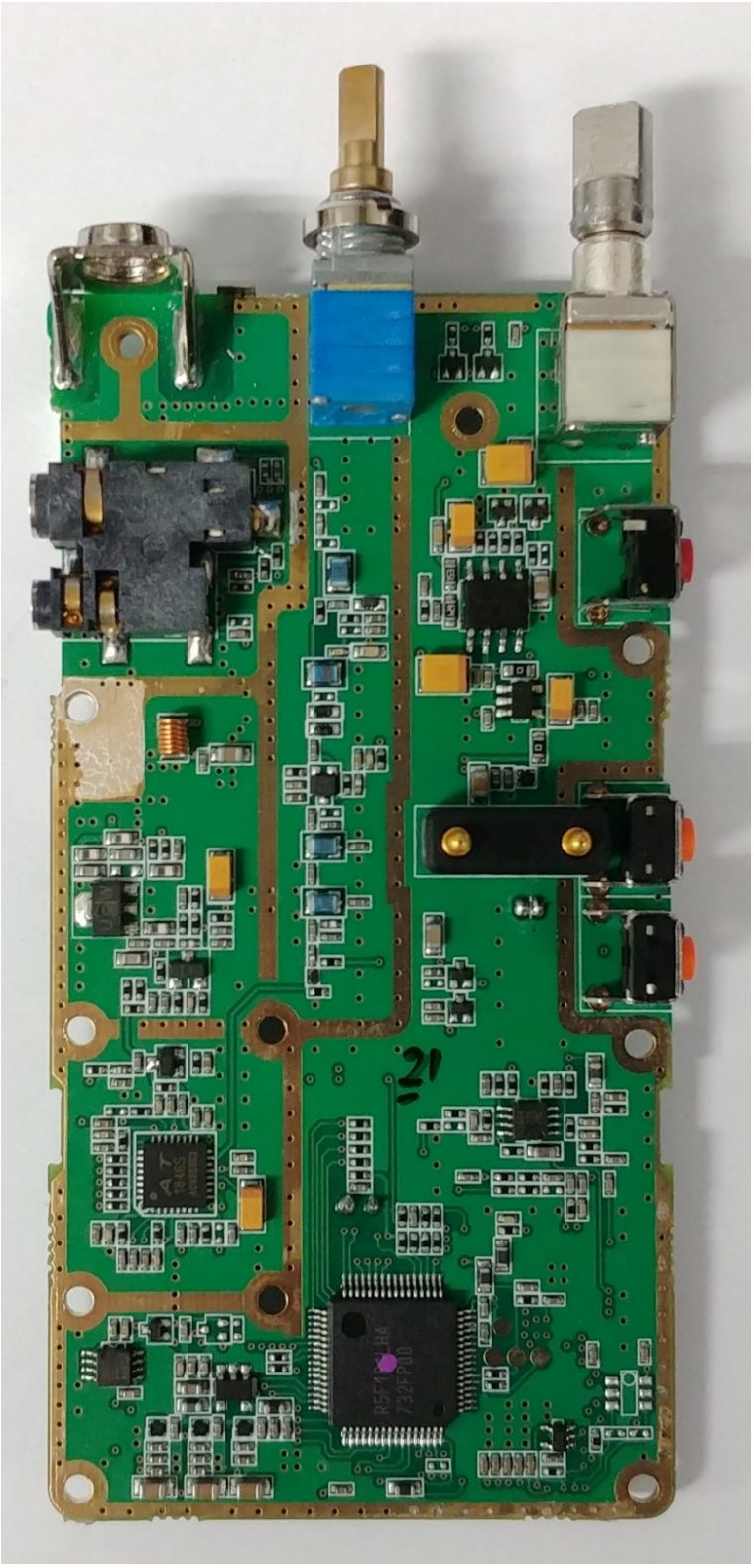

EXHIBIT 9D - RF boards <u>with</u> chassis and housing for (Front Side)

EXHIBIT 9E - Chassis and housing (Back Side)

EXHIBIT 9F – Exploded View of Radio

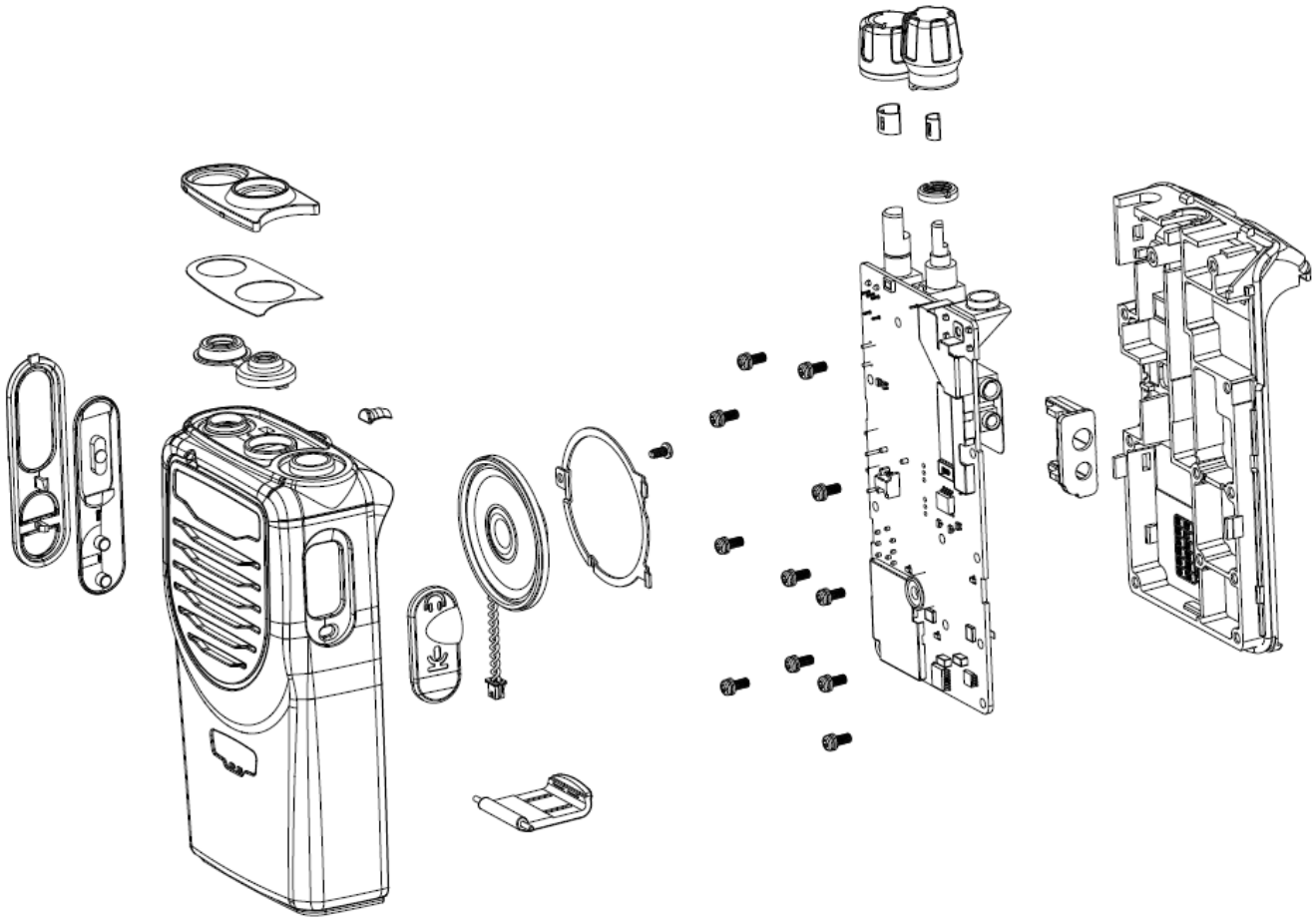

***** END *****