contacto

MOTOROLA

Ⓜ, Motorola, Radios Profesionales, Serie PRO, PRO7550, PRO7650, Tan Dedicado Como Lo Es Usted, Privacy Plus, y Call Alert son marcas de Motorola, Inc.
© 2000 Motorola, Inc. Todos los derechos reservados. Impreso en los EE.UU.

Ⓜ, Motorola, Rádios Profissionais, Série PRO, PRO7550, PRO7650, Tão Dedicado Quanto É Você, Privacy Plus, e Call Alert são marcas de Motorola, Inc.
© 2000 Motorola, Inc. Todos os direitos reservados. Impresso nos EUA.

Ⓜ, Motorola, Professional Radio, PRO Series, PRO7550, PRO7650, As Dedicated As You Are, Privacy Plus, and Call Alert are trademarks of Motorola, Inc.
© 2000 Motorola, Inc. All rights reserved. Printed in U.S.A.

68P81093C86-A

control

MOTOROLA

PRO7550™ and PRO7650™

Radio Portátil
Rádio Portátil
Portable Radio

contacto

control

Guía del usario
Manual do usuário
User Guide

Tan Dedicado Como Lo Es Usted

Radios Profesionales

CONTENTS

Computer Software Copyrights 3

Safety 5

Safety and General Information 5
RF Operational Characteristics 5
Exposure To Radio Frequency Energy . 5
Portable Radio Operation and EME Exposure 6
Antenna Care 6
Two-Way Radio Operation. 6
Body-Worn Operation 6
Approved Accessories 7
Electromagnetic Interference/ Compatibility 7
Safety and General 8
Operational Warnings 8
Operational Cautions 9
Intrinsically Safe Radio Information. 10
FMRC Approved Equipment 10
Repair of FMRC Approved Products . . 11

Radio Overview 15

Parts of the Radio 15
PRO7550™ and PRO7650™ Models . 15
On/Off/Volume Knob 16
Mode Selector Knob 16
LED Indicator. 16
Push-to-Talk (PTT) Button 16
Microphone 16
Keypad Keys 16
Menu Keys 18
Selecting a Feature 18
Menu Display. 19
LCD Screen and Icons 19
Alert Tone Indications 20
Programmable Buttons 22
Trunked Radio Systems 24

Getting Started 25

Battery Information 25
Charging the Battery 25
Battery Charge Status 26
Attaching the Battery 27
Removing the Battery 27
Accessory Information 28
Removing the Antenna 28
Attaching the Belt Clip 29
Removing the Belt Clip 29
Attaching the Side Connector Cover . . 30
Turning The Radio On or Off. 30
Receiving a Trunked Call 30
Radio Self Test 31

Radio Calls (Trunked Operation Only) . 33

Selecting a Zone and Mode 33
Selecting a Zone 33
Selecting a Mode 34
Receiving a Call 34
Making a Call 34
Conventional Modes 34
Trunked Modes 35
Low-Battery Alert 35
Coded Squelch Operation 35
Variable RF Power Level (Selected Models Only) 35
Failsoft Operation (Trunked Systems Only) 35
Muting the Keypad Tones 36

Scan 37

Scan Operation 37
Turning Scan On or Off with the Keypad) 37
Deleting Nuisance Modes 38
Viewing a Scan List 38
Programming a Scan List 39

Trunked Features 41

Viewing Your Radio's ID Number 41
Enhanced Private Call Operation 41
Answering a Private Call 42
Making a Private Call 43
Call Alert™ Operation 46
Answering a Call Alert™ Page with a Group Call 46
Making a Call Alert™ 46
Initiating a Call Alert 46
Sending the Call Alert 48
Programming the Radio's Lists 49
Programming the Telephone List Numbers 49
Programming the Call List 50
Trunked Telephone Operation 52
Answering a Telephone Call 52
Making a Telephone Call 53
Automatic Multiple Site Selection (AMSS) (PRO7650 Only) 56
Forcing a Site Change 56
Locking and Unlocking a Site 56

Conventional Call 57

Selecting a Conventional Channel 57
Sending a Conventional Call 57
Repeater or Talkaround Mode 57
Smart PTT 58

Warranty. 59
Limited Warranty 59
Accessories 65
Carry Cases 65
Chargers 65
Headsets 65
Remote Speaker Microphones 66
Adapters 66
Batteries 66
Miscellaneous 66
Antennas 67

COMPUTER SOFTWARE COPYRIGHTS

The Motorola products described in this manual may include copyrighted Motorola computer programs stored in semiconductor memories or other media. Laws in the United States and other countries preserve for Motorola certain exclusive rights for copyrighted computer programs, including, but not limited to, the exclusive right to copy or reproduce in any form the copyrighted computer program. Accordingly, any copyrighted Motorola computer programs contained in the Motorola products described in this manual may not be copied, reproduced, modified, reverse-engineered, or distributed in any manner without the express written permission of Motorola. Furthermore, the purchase of Motorola products shall not be deemed to grant either directly or by implication, estoppel, or otherwise, any license under the copyrights, patents or patent applications of Motorola, except for the normal non-exclusive license to use that arises by operation of law in the sale of a product.

Notes

SAFETY

SAFETY AND GENERAL INFORMATION

IMPORTANT INFORMATION ON SAFE AND EFFICIENT OPERATION

READ THIS INFORMATION BEFORE USING YOUR MOTOROLA TWO-WAY RADIO

The information provided in this document supersedes the general safety information contained in user guides published prior to July 2000. For information regarding radio use and hazardous atmosphere please refer to the Factory Mutual (FM) Approval Manual Supplement or Instruction Card, which is included with radio models that offer this capability.

RF Operational Characteristics

Your radio contains a transmitter and a receiver. When it is ON, it receives and transmits radio frequency (RF) energy.

Exposure To Radio Frequency Energy

Your Motorola Two-Way Radio, is designed to comply with the following National and International Standards and Guidelines regarding exposure of human beings to radio frequency electromagnetic energy: (EME)

- United States Federal Communications Commission, Code of Federal Regulations (47 CFR part 2 sub-part J)
- American National Standards Institute (ANSI)/Institute of Electrical and Electronic Engineers (IEEE) (C95.1 - 1992)
- Institute of Electrical and Electronic Engineers (IEEE) (C95.1-1999 Edition)
- National Council on Radiation Protection and Measurements (NCRP) of the United States (Report 86, 1986)
- International Commission on Non-Ionizing Radiation Protection (ICNRP - 1998)
- National Radiological Protection Board of the United Kingdom (1995)
- Ministry of Health (Canada) Safety Code 6. Limits of Human Exposure to

Radiofrequency Electromagnetic Fields in the Frequency Range from 3 kHz to 300 GHz (1999)

- Australian Communications Authority Radiocommunications (Electromagnetic Radiation - Human Exposure) Standard (1999) (applicable to wireless phones only)

PORTABLE RADIO OPERATION AND EME EXPOSURE

To assure optimal radio performance and make sure human exposure to radio frequency electromagnetic energy is within the guidelines set forth in the above standards, always adhere to the following procedures:

Antenna Care

Use only the supplied or an approved replacement antenna. Unauthorized antennas, modifications, or attachments could damage the phone and may violate **FCC** regulations.

DO NOT hold the antenna when the two-way radio is "IN USE". Holding the antenna affects call quality and may cause the radio to operate at a higher power level than needed.

Two-Way Radio Operation

When using your radio as a traditional two-way radio, **hold the radio in a vertical position with the microphone one to two inches (2.5 to 5 cm) away from the lips.**

Body-Worn Operation

To maintain compliance with FCC RF exposure guidelines, if you wear a radio on your body when transmitting, always place the radio **in a Motorola approved clip, holder, holster, case, or body harness for this product**. Use of non-Motorola-approved accessories may exceed FCC RF exposure guidelines. **If you do not use a Motorola approved body-worn accessory and are not using the radio in the intended use positions along side of the head in the phone mode or in front of the face in the two-way radio mode, then ensure the antenna and radio is kept the following minimum distances from the body when transmitting:**

- **Phone or Two-way radio mode: one inch (2.5 cm)**
- **Data operation using any data feature with or without an accessory cable: one inch (2.5 cm)**

Approved Accessories

For a list of approved Motorola accessories look in the appendix or accessory section of this manual.

ELECTROMAGNETIC INTERFERENCE/COMPATIBILITY

Note: Nearly every electronic device is susceptible to electromagnetic interference (EMI) if inadequately shielded, designed or otherwise configured for electromagnetic compatibility.

- **FACILITIES**

To avoid electromagnetic interference and/or compatibility conflicts, turn off your radio in any facility where posted notices instruct you to do so. Hospitals or health care facilities may be using equipment that is sensitive to external RF energy.

- **AIRCRAFT**

When instructed to do so, turn off your radio when on board an aircraft. Any use of a radio must be in accordance with applicable regulations per airline crew instructions.

- **MEDICAL DEVICES**
  - **Pacemakers**

    The Health Industry Manufacturers Association recommends that a minimum separation of 6 inches (15 centimeters) be maintained between a handheld wireless radio and a pacemaker.These recommendations are consistent with the independent research by, and recommendations of, Wireless Technology Research.

Persons with pacemakers should:

- ALWAYS keep the radio more than six inches (15 centimeters) from their pacemaker when the radio is turned ON.

- not carry the radio in the breast pocket.
- use the ear opposite the pacemaker to minimize the potential for interference.
- turn the radio OFF immediately if you have any reason to suspect that interference is taking place.

- **Hearing Aids**

Some digital wireless radios may interfere with some hearing aids. In the event of such interference, you may want to consult your hearing aid manufacturer to discuss alternatives.

- **Other Medical Devices**

If you use any other personal medical device, consult the manufacturer of your device to determine if it is adequately shielded from RF energy. Your physician may be able to assist you in obtaining this information.

SAFETY AND GENERAL

- **Use While Driving**

Check the laws and regulations on the use of radios in the area where you drive. Always obey them

When using your radio while driving, please:

- Give full attention to driving and to the road.
- Use hands-free operation, if available.
- Pull off the road and park before making or answering a call if driving conditions so require.

OPERATIONAL WARNINGS

- **FOR VEHICLES WITH AN AIR BAG**

WARNING

Do not place a portable radio in the area over an air bag or in the air bag deployment area. Air bags inflate with great force. If a portable radio is placed in the air bag deployment area and the air bag inflates, the radio may be propelled with great force and cause serious injury to occupants of the vehicle.

- **POTENTIALLY EXPLOSIVE ATMOSPHERES**

Turn off your radio prior to entering any area with a potentially explosive atmosphere, unless it is a radio type especially qualified for use in such areas as "Intrinsically Safe" (for example, Factory Mutual, CSA, or UL Approved). Do not remove, install, or charge batteries in such areas. Sparks in a potentially explosive atmosphere can cause an explosion or fire resulting in bodily injury or even death.

Note: The areas with potentially explosive atmospheres referred to above include fueling areas such as below decks on boats, fuel or chemical transfer or storage facilities, areas where the air contains chemicals or particles, such as grain, dust or metal powders, and any other area where you would normally be advised to turn off your vehicle engine. Areas with potentially explosive atmospheres are often but not always posted.

- **BLASTING CAPS AND AREAS**

To avoid possible interference with blasting operations, turn off your radio when you are near electrical blasting caps, in a blasting area, or in areas posted: "Turn off two-way radio". Obey all signs and instructions.

OPERATIONAL CAUTIONS

- **ANTENNAS**

Caution

Do not use any portable radio that has a damaged antenna. If a damaged antenna comes into contact with your skin, a minor burn can result.

- **BATTERIES**

All batteries can cause property damage and/or bodily injury such as burns if a conductive material such as jewelry, keys, or beaded chains touch exposed terminals. The conductive material may complete an electrical circuit (short circuit) and become quite hot. Exercise care in handling any charged battery, particularly when placing it inside a pocket, purse, or other container with metal objects.

INTRINSICALLY SAFE RADIO INFORMATION

FMRC Approved Equipment

Anyone intending to use a radio in a location where hazardous concentrations of flammable material exist (hazardous atmosphere) is advised to become familiar with the subject of intrinsic safety and with the National Electric Code NFPA 70 (National Fire Protection Association) Article 500 (hazardous [classified] locations).

An Approval Guide, issued by Factory Mutual Research Corporation (FMRC), lists manufacturers and the products approved by FMRC for use in such locations. FMRC has also issued a voluntary approval standard for repair service (“Class Number 3605”).

FMRC Approval labels are attached to the radio to identify the unit as being FM Approved for specified hazardous atmospheres. This label specifies the hazardous Class/Division/ Group along with the part number of the battery that must be used. Depending on the design of the portable unit, this FM label can be found on the back or the bottom of the radio housing. The FM Approval mark is shown below:

FM
APPROVED

WARNINGS

WARNING

- Do not operate radio communications equipment in a hazardous atmosphere unless it is a type especially qualified for such use (e.g., FMRC Approved). An explosion or fire may result.
- Do not operate an FMRC Approved Product in a hazardous atmosphere if it has been physically damaged (e.g., cracked housing). An explosion or fire may result.
- Do not replace or charge batteries in a hazardous atmosphere. Contact sparking may occur while installing or removing batteries and cause an explosion or fire.

WARNINGS

WARNING

- Do not replace or change accessories in a hazardous atmosphere. Contact sparking

may occur while installing or removing accessories and cause an explosion or fire.

- Do not operate an FMRC Approved Product unit in a hazardous location with the accessory contacts exposed. Keep the connector cover in place when accessories are not used.
- Turn a radio off before removing or installing a battery or accessory.
- Do not disassemble an FMRC Approved Product unit in any way that exposes the internal electrical circuits of the unit.

Radios must ship from the Motorola manufacturing facility with the hazardous atmosphere capability and FM Approval labeling. Radios will not be “upgraded” to this capability and labeled in the field.

A modification changes the unit’s hardware from its original design configuration. Modifications can only be made by the original product manufacturer at one of its FMRC-audited manufacturing facilities.

WARNINGS

WARNING

- Failure to use an FMRC Approved Product unit with an FMRC Approved battery or FMRC Approved accessories specifically approved for that product may result in the dangerously unsafe condition of an unapproved radio combination being used in a hazardous location.
- Unauthorized or incorrect modification of an FMRC Approved Product unit will negate the Approval rating of the product.

Repair of FMRC Approved Products

REPAIRS FOR MOTOROLA PRODUCTS WITH FMRC APPROVAL ARE THE RESPONSIBILITY OF THE USER.

You should not repair or relabel any Motorola-manufactured communication equipment bearing the FMRC Approval label (“FMRC Approved Product”) unless you are familiar with the current FMRC Approval standard for repairs and service (“Class Number 3605”).

You may want to consider using a repair facility that operates under 3605 repair service approval.

WARNINGS

WARNING

- Incorrect repair or relabeling of any FMRC Approved Product unit could adversely affect the Approval rating of the unit.
- Use of a radio that is not intrinsically safe in a hazardous atmosphere could result in serious injury or death.

FMRC's Approval Standard Class Number 3605 is subject to change at any time without notice to you, so you may want to obtain a current copy of 3605 from FMRC. Per the December 1994 publication of 3605, some key definitions and service requirements are as follows:

Repair

A repair constitutes something done internally to the unit that would bring it back to its original condition—Approved by FMRC. A repair should be done in an FMRC Approved facility.

Items not considered as repairs are those in which an action is performed on a unit which does not require the outer casing of the unit to be opened in a manner which exposes the internal electrical circuits of the unit. You do not have to be an FMRC Approved Repair Facility to perform these actions.

Relabeling

The repair facility shall have a method by which the replacement of FMRC Approval labels are controlled to ensure that any relabeling is limited to units that were originally shipped from the Manufacturer with an FM Approval label in place. FMRC Approval labels shall not be stocked by the repair facility. An FMRC Approval label shall be ordered from the original manufacturer, as needed, to repair a specific unit. Replacement labels may be obtained and applied by the repair facility, provided there is satisfactory evidence that the unit being relabeled was originally an FMRC Approved unit. Verification may include, but is not limited to: a unit with a damaged Approval label, a unit with a defective housing displaying an Approval label, or a customer invoice indicating the serial number of the unit and purchase of an FMRC Approved model.

Do Not Substitute Options or Accessories

The Motorola communications equipment certified by Factory Mutual is tested as a system and consists of the FM Approved portable, FM Approved battery, and FM Approved accessories or options, or both. This FM Approved portable and battery combination must be strictly observed. There must be no substitution of items, even if the substitute has been previously Approved with a different Motorola communications equipment unit. Approved configurations are listed in the FM Approval Guide published by FMRC, or in the product FM Supplement. This FM Supplement is shipped from the manufacturer with the FM Approved radio and battery combination. The Approval Guide, or the Approval Standard Class Number 3605 document for repairs and service, can be ordered directly from Factory Mutual Research Corporation located in Norwood, Massachusetts.

Notes

PARTS OF THE RADIO

PRO7550™ and PRO7650™ Models

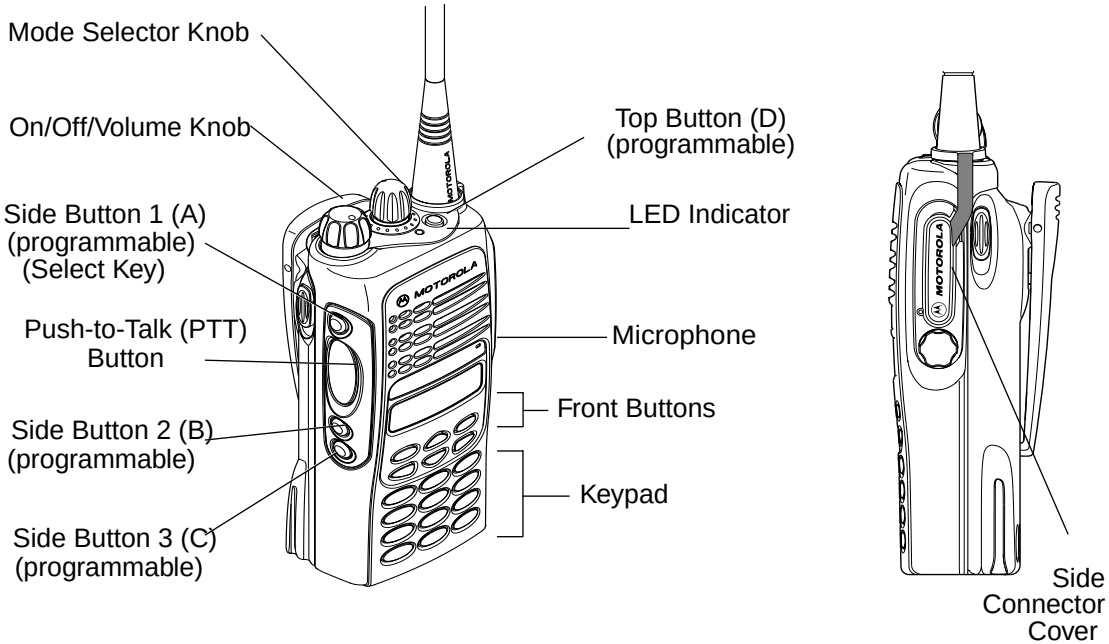

On/Off/Volume Knob

Turns the radio on or off, and adjusts the radio's volume.

Mode Selector Knob

Selects the required operation mode.

LED Indicator

Indicates status of battery (see page 26); or (see table below) power-up, scan, or receipt of a radio selective call:

With PTT switch pressed (radio transmitting)	
Steady red	Radio is transmitting (**PTT** button pressed)
LED unlit	Radio is not transmitting
Flashing red	Low battery (conventional mode only; programmable from the CPS)
Momentary green	Radio has powered-up successfully
Amber	In Permanent Monitor (Conventional only)

Push-to-Talk (PTT) Button

Press and hold down this button to talk; release it to listen.

With PTT Released (radio receiving)	
Blinking red light*	Mode busy (conventional mode only)
Blinking green light	Receipt of a telephone call, Private Conversation call, or Call Alert page

Microphone

When sending a message, hold the microphone 1 to 2 inches (2.5 to 5 cm) away from your mouth, and speak clearly into the microphone.

Keypad Keys

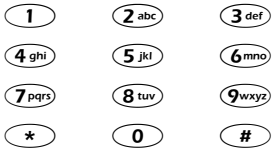

These keys are used for:

- dialing a phone number.
- entering a specific radio ID number when making a private or Call Alert radio call

The following table shows the character cycle for each key, when entering information for programming the radio's lists.

Key	Number of Times the Key is Pressed					
	1	2	3	4	5	6
0	0					
1	1	Blank space				
2 abc	A	B	C	2		
3 def	D	E	F	3		
4 ghi	G	H	I	4		
5 jkl	J	K	L	5		
6 mno	M	N	O	6		
7 pqrs	P	Q	R	S	7	
8 tuv	T	U	V	8		
9 wxyz	W	X	Y	Z	9	
*	*					
#	#	-	+	.	/	\

Note: The sequence in the table above is valid when entering information on a blank display. However, when editing existing information, the above sequence may differ. For instance, if the last character entered is a "**R**", pressing 7 pqrs to enter the next character, would start the character cycle at "S" and NOT at "P". After the button rolls over from the number, alpha characters are displayed again but in lower case letters.

- When editing existing information, pressing 1 would **ALWAYS** start the character cycle at the "*blank space*" and **NOT** at "**1**".

Menu Keys

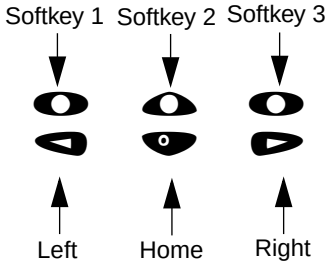

Selecting a Feature

A unique feature of your radio is its use of the display to give you quick access to many of the radio's features without having to have a dedicated key for each feature.

The names of the features (CALL, MUTE, etc.) are shown on the display, three at a time. Selection of features is controlled by the three keys directly below the feature names: the left key controls the left feature, the middle key controls the middle feature, and the right key controls the right feature.

Softkeys ( )

When already in Menu Mode, these keys are used to make Menu selections.

Left and Right Arrow Keys ( )

The left and right arrow keys are used to scroll the display forward or backward through the radio's features and lists. There is no end point to the list, so if you continue to scroll in one direction, the display will "wrap around" back to the beginning of the list. If you hold either key down, the display will scroll at a faster rate until the key is released.

The left arrow key is also used for editing when you are entering information manually from the keypad.

Pressing the left arrow key, when editing numeric information (such as telephone numbers), will backspace, and erase the display, one character at a time. If you have erased all the digits, an additional press of the left arrow key will return the display to the pre-programmed list.

Pressing the left arrow key, when editing alphabetic information (such as member's names), will move the cursor one step to the left.

HOME Key ( )

The **HOME** key will always return you to the home (default) display. In most cases, this is the current mode. In addition, if you are using a feature that requires it, pressing the HOME key will also cause information to be saved in memory before going to the home display. Some radio features will automatically go to the home display when they are completed, without having to press the HOME key, thus reducing the number of key presses required.

Menu Display

The menu items can be displayed in normal video or in reversed video (programmable through the CPS). All the menu items in the examples in this manual are shown in reversed video.

The order in which the menu items are displayed is programmable. Thus, the order of the menu items on your radio may differ from those shown here in this manual. In such a situation, press the relevant softkey to make your menu selections. All descriptions of functions and displays after the selection are valid.

LCD Screen and Icons

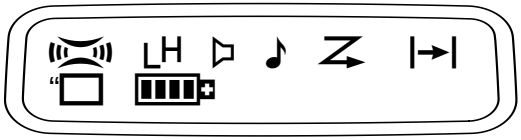

Displays mode selected, channel, menu, and radio status information. The top two screen rows show radio status indicator symbols, explained in the following table.

Symbol	Name and Description
	XPAND™ Indicator Indicates that your radio has the companding feature activated.
LH	**Power Level Indicator** L lights up when your radio is configured to transmit in Low Power. H lights up when your radio is configured to transmit in High Power.

Symbol	Name and Description
	Carrier Squelch Indicator Indicates when the active conventional mode is being monitored in the carrier squelch mode; ON = BEING MONITORED/ OFF = NOT BEING MONITORED.
	Call Received Flashes when a call or page is received.
	Scan Indicator Indicates when the radio is scanning; ON = SCANNING/OFF =NOT SCANNING.
	Direct Indicates whether you are talking directly to another radio (talkaround), or through a repeater; ON = DIRECT OFF = REPEATER.

Symbol	Name and Description
	Programming/Viewing Mode Indicates when the radio is in the programming or viewing mode; ON = IN VIEWING MODE BLINKING = IN PROGRAMMING MODE.
	Battery Level Indicator Shows the remaining charge in your battery, based on how many bars are displayed. Flashing, indicates flat battery.

Alert Tone Indications

Your radio generates a number of audible tones to indicate radio operating conditions:

- Low Battery – A low-battery condition is indicated by a high-pitched, cricket-like “chirp-chirp” when the **PTT** button is released following a transmission.
- Successful Power-Up – A short, medium-pitched tone when the radio is first turned on indicates that the radio has passed its power-up self test and is ready for use.

- Unsuccessful Power-Up – A short, low-pitched tone when the radio is first turned on indicates that the radio has failed its power-up self test and is not ready for use. Contact your service representative for service.
- Transmit on Receive-Only Mode – If you press the **PTT** button while tuned to a “receive-only” mode, you will hear a continuous, low-pitched alert tone, indicating that no transmission is possible on this mode. This tone will continue until the **PTT** button is released.
- Transmit Inhibit on Busy Mode – If you press the **PTT** button while the mode is busy, you will hear a continuous, low-pitched alert tone, indicating that no transmission is possible on this mode. This tone will continue until the **PTT** button is released.
- Transmit Inhibit on Flat Battery – If you press the **PTT** button while the battery is flat, you will hear a continuous, low pitched alert tone, indicating that transmission is impossible.
- Invalid Mode – A continuous, low-pitched tone is heard when an invalid or unprogrammed operation is attempted on the radio.
- Valid (Good) Key Press – A short, medium-pitched tone when a keypad key is pressed indicates that the key press was accepted.
- Invalid (Bad) Key Press – A short, low-pitched tone when a keypad key is pressed indicates that the key press was rejected.
- Failsoft (Trunked Systems Only) – A faint “beeping” tone every ten seconds indicates that the radio is operating in the failsoft mode.
- Time-Out Timer Warning – Your radio’s time-out timer limits the length of your transmission time. When you are pressing the **PTT** button (transmitting), a short, low-pitched warning tone will sound four seconds before the allotted time will expire.
- Time-Out Timer Timed-Out – If you hold down the **PTT** button longer than the time-out timer’s allotted time, a continuous, low-pitched tone will sound, indicating that your transmission has been cut off. This tone will continue until the **PTT** button is released.
- Phone Busy – A “bah-bah-bah-bah” tone when telephone interconnect is accessed indicates that all available modes are busy and the radio is in queue for the next available phone line.
- Call Alert™ (Page) Received – A group of four medium-pitched tones every five seconds indicates that your radio has received a Call Alert page.

- Call Alert™ (Page) Sent – A single medium-pitched tone (central acknowledge), followed by a group of four medium-pitched tones indicates that a Call Alert page sent by your radio has been received by the target radio.
- Private Conversation™ Call Received – A group of two medium-pitched tones indicates that your radio has received a Private Conversation call. This sequence is repeated every five seconds for approximately 20 seconds for enhanced Private Conversation.
- Trunked System Busy (Trunked Systems Only) – A “bah-bah-bah-bah” tone when a trunked system is accessed indicates that all available channels are busy and the radio is in queue for the next available channel.
- Call Back (Trunked Systems Only) – A group of three medium-pitched tones (di-di-dit) indicates that a talkgroup is now available for your previously requested transmission.

Programmable Buttons

Several of your radio’s buttons can be programmed by your dealer as shortcuts to many of the radio’s features.

Check with your dealer for a complete list of functions your radio supports.

Programmable buttons include:

- The three Side Buttons (A, B, C) and the Top Button (D)
- On keypad radios only, the three Front Buttons (P1, P2, P3)

Each button can access up to two features, depending on the type of button press:

- **short press**—quickly pressing and releasing the programmable buttons, or
- **long press**—pressing and holding the programmable buttons for a period of time (programmable for 1/2 to 16 seconds), or
- **hold down**—pressing and holding down the programmable buttons while checking status or making adjustments.

The following table summarizes the programmable features available.

In the “Button” column, have your dealer write down the programmable buttons next to the features that have been programmed to them.

Use the abbreviations (e.g., A for Side Button 1, D for Top Button, etc.) shown in the radio illustration at the front of this manual.

Also, where a choice exists, have your dealer indicate whether the button press is short press (SP) or long press (LP).

Check with your dealer for a complete list of features your radio supports.

Button	Short Press	Long Press	Hold Down
Monitor/Permanent Monitor	Temporarily monitors the selected channel for any activity.	Continually monitors the selected channel.	Monitors the selected channel for any activity.
Volume Set	—	—	Sounds a tone for adjusting the radio's volume level.
Scan	Toggles between the start/stop of the Scan operation.	—	—
Nuisance Delete	Temporarily deletes an unwanted active scan member.	—	—
Search	Makes a system search.		
Light	Turns on/off your radio's backlight.	—	—
Call	Enters or exits a Private call.		
Page	Enters or exits a Call Alert.		
Call Response	Respond to or exit from a Private Call or Call Alert.	—	—
Phone	Enters or leaves Phone mode.	—	—

TRUNKED RADIO SYSTEMS

PRO7550 and PRO7650 radios can operate on both *Privacy Plus™ trunked* and *conventional* radio systems.

Conventional typically refers to radio-to-radio communication, sometimes through a repeater.

A *trunked* radio system allows a large number of users to share a relatively small number of frequencies without interfering with each other.

The air time of all the repeaters in the trunked system is pooled, which maximizes the amount of air time available to any one radio, and minimizes channel congestion.

Some of the benefits of trunked two-way radio systems are:

- No channel monitoring required prior to transmission.
- Improved system access.
- Automatic channel selection.
- Increased privacy among members of the same group.
- Only one attempt is required to access the system. If all channels are busy, the call request enters a queue and the central controller automatically assigns the next available channel. Two (2) medium-pitched tones followed by one (1) high-pitched tone sounds when the call can be made.

GETTING STARTED

BATTERY INFORMATION

Charging the Battery

If a battery is new, or its charge level is very low, you will need to charge it before you can use it.

Note: Batteries are shipped uncharged from the factory. Always charge a new battery 14 to 16 hours before initial use, regardless of the status indicated by the charger.

To charge the battery

Place the battery, with or without the radio, in the charger. The charger LED indicates the charging progress:

LED Color	Status
No LED Indication	Battery inserted incorrectly.
Single Green Flash	Successful charger power-up.
Flashing Red*	Battery unchargeable or not making proper contact.
Steady Red	Battery in rapid-charge mode.
Flashing Yellow	Battery in charger, not in rapid-charge mode but waiting to be charged.
Flashing Green†	Battery 90% (or more) charged.
Steady Green	Battery fully charged.

* Remove the battery from the charger. Clean battery contacts with isopropyl alcohol applied to a soft cloth. Place the battery back in the charger. If the LED indicator continues to flash red, replace the battery.

† A standard battery may require one hour to charge to 90%.

Battery Charge Status

If programmed by your dealer, you can check your battery's charge status by holding down the preprogrammed **Battery Gauge** button. The charge status is shown by the color of the radio's LED indicator.

Battery Level	LED Indicator
High	Green
Sufficient	Yellow
Low	Flashing red
Very Low	None

Battery chargers will only charge the Motorola-authorized batteries listed below; other batteries may not charge.

Part No.	Description
HNN9008	High-Capacity/NiMH
HNN9009	Ultra-High-Capacity/NiMH
HNN9010	Ultra-High-Capacity/Factory Mutual/NiMH
HNN9011	High-Capacity/Factory Mutual/ NiCd
HNN9012	High-Capacity/NiCd
HNN9013	High-Capacity/Lithium-Ion

Attaching the Battery

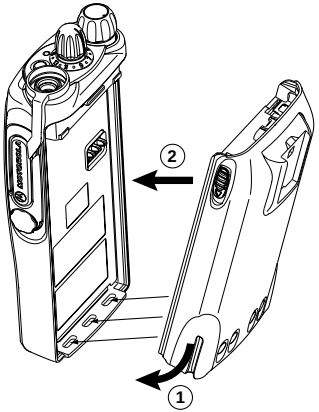

1	Fit the extensions at the bottom of the battery into the bottom slots on the radio.
2	Press the top part of the battery toward the radio until you hear a click.

Removing the Battery

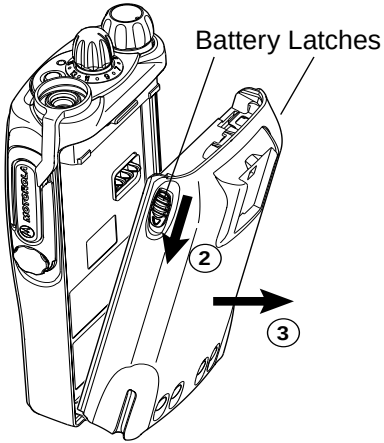

1	Turn off the radio (see page 30).
2	Slide both battery latches downward.
3	Pull the top part of the battery away from the radio.

ACCESSORY INFORMATION

Attaching the Antenna

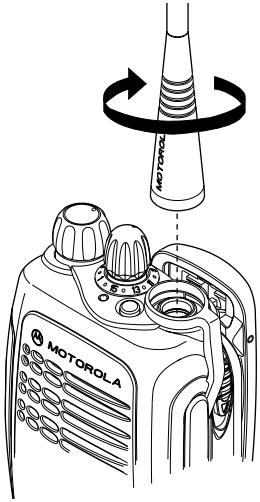

1 Turn the antenna clockwise to attach it.

Removing the Antenna

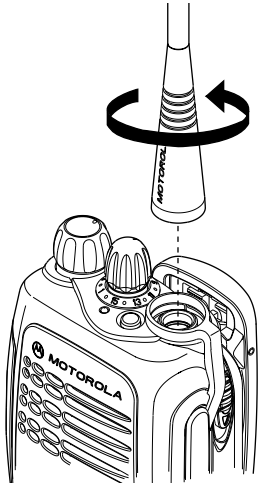

1 Turn the antenna counterclockwise to remove it.

Attaching the Belt Clip

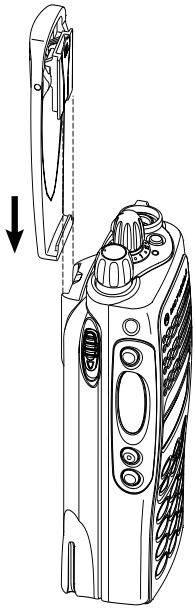

1	Align the grooves of the belt clip with those of the battery.
2	Press the belt clip downward until you hear a click.

Removing the Belt Clip

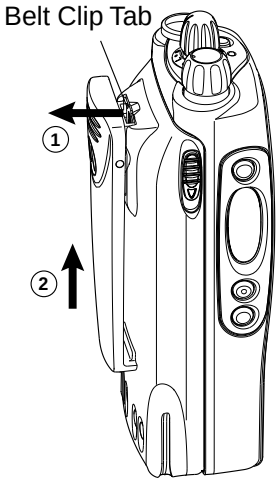

1	Use a key to press the belt clip tab away from the battery.
2	Slide the belt clip upward to remove it.

Attaching the Side Connector Cover

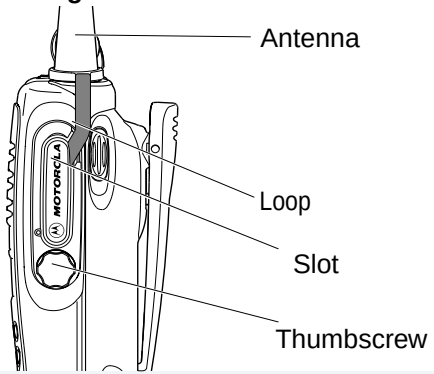

1	Place the loop (attached to the side connector cover) over the antenna; then slide it downward until it touches the top of the radio.
2	Insert the tab on the top of the cover into the slot above the connector.
3	Position the cover over the connector and align the thumbscrew with the threaded hole in the radio.
4	Tighten the thumbscrew to hold the cover in place. Do not overtighten the thumbscrew.

Turning The Radio On or Off

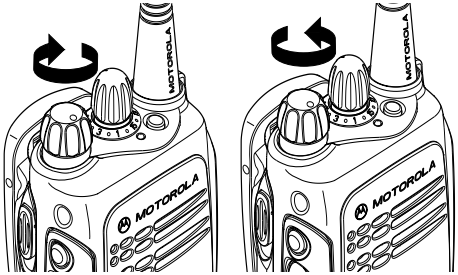

ON **OFF**

RECEIVING A TRUNKED CALL

1	Turn your radio on.
2	Adjust your radio's volume.
3	Use the **Mode Selector** knob to select the desired trunked talkgroup. • Make sure the **PTT** button is released.
4	Listen for voice activity. The LED indicator flashes green when your radio is receiving.

RADIO SELF TEST

Turn the radio on by rotating the volume control clockwise. The radio goes through a power-up self check and, if it passes the check, the display momentarily shows “SELF TEST.” A good-power-up, high-pitched tone sounds to indicate that the radio has passed the self check.

If the radio fails the self check, the display shows “ERROR XX/XX” (where XX/XX is an alphanumeric error code), accompanied by a bad-power-up, low-pitched tone. Turn the radio off, check the battery, and turn the radio back on. If the radio still does not pass the self check, a problem exists in the radio. Contact your nearest Motorola Service Shop.

Note: The power-up self check verifies that the radio’s microprocessor-based systems are working, but it does not check all of the rf components, nor does it check the operation of all customer-specific features. Motorola recommends that the functionality of the radio be periodically checked by an authorized Motorola service shop.

Notes

RADIO CALLS (TRUNKED OPERATION ONLY)

This section outlines the basic functions of your radio. All references to what is shown on the display is only valid for PRO7550/PRO7650 radios. Throughout this section, the display below

PLANT POLICE

is used to indicate the radio's home display.

SELECTING A ZONE AND MODE

A *mode* is a channel or talkgroup and all the features that are programmed to it. A *zone* is a grouping of modes that is selected using the menu keys. Before you use your radio to receive or send messages, you should first select the desired zone and mode.

Selecting a Zone

1	until *ZONE* is displayed.	ZONE MUTE CALL
2	(the softkey below *ZONE*). The current zone name blinks on the display.	For example PLANT POLICE
3	until the desired zone name is displayed. —or— Enter the number of the desired zone.	For example CITY POLICE
4		
5	The displayed zone is the new selected zone	CITY POLICE

Selecting a Mode

1	Turn the ***Mode Selector*** *knob* to the desired mode.	
2	The display shows the selected mode's name.	For example PLANT MODE 1
3	If the selected mode is unprogrammed, an invalid-mode tone is heard until a valid programmed mode is selected.	UNPROGRAMMED

RECEIVING A CALL

1	Turn the radio on and select the desired zone and mode (see *Selecting a Zone and Mode*).
2	Your radio is now set to receive calls on the selected mode.

MAKING A CALL

Conventional Modes

1	Turn the radio on and select the desired conventional zone and mode (see *Selecting a Zone and Mode*).
2	Press and hold the **PTT** switch on the side of the radio and speak slowly and clearly into the microphone area. The red LED lights continuously when the radio is transmitting.
3	When you have finished talking, release the **PTT** switch to listen.

Note: Do not interrupt another user. If the present mode is programmed to receive PL, ensure that the mode is not in use by pressing the monitor button to listen for activity.

- If the mode-busy feature is enabled, a blinking red LED on receive (**PTT** switch released) indicates that the mode is currently busy.
- If a mode is programmed for receive only, any attempt to transmit on that mode will cause an invalid-mode tone to sound until the **PTT** switch is released.

Trunked Modes

1. Turn the radio on and select the desired trunked zone and mode (see *Selecting a Zone and Mode*).
2. Press and hold the **PTT** switch on the side of the radio and speak slowly and clearly into the microphone area. The red LED lights when the radio is transmitting. When you have finished talking, release the **PTT** switch to listen.

- If you hear a busy signal (a low-frequency “bah-bah-bah-bah”), release the **PTT** switch and wait for a call-back tone (sounds like “di-di-dit”). When you hear the call-back tone you will have three seconds to press the **PTT** switch. This allows you to make another call without getting a busy signal.
- If a continuous talk-prohibit tone is heard when the **PTT** switch is pressed, transmission is not possible. The radio may be out of range.

Low-Battery Alert

Your radio emits an alert tone when a low-battery condition is detected.

Coded Squelch Operation

Tone Private-Line® (PL), Digital Private-Line™ (DPL), and carrier squelch operation are all available in your radio, on a per-mode basis.

When in carrier squelch operation, all traffic on the mode is heard. When in PL or DPL operation, your radio responds to only those messages intended for you. When this feature is mode-slaved, PL, DPL, or carrier squelch is programmed to each mode.

Whenever the radio is operating in carrier squelch, the display will show ⚐.

Variable RF Power Level (Selected Models Only)

Radios can have more than one power level. High power can be programmed on modes where high power is permitted, and low power can be programmed on all other modes. The high-/low-power feature can be selected via the menu keys.

FAILSOFT OPERATION (TRUNKED SYSTEMS ONLY)

The “failsoft” system ensures continual radio communications capability during a trunked system failure. Your radio will automatically go into failsoft operation, if the central trunking controller fails for any reason. While in failsoft operation, your radio will transmit and receive on a predetermined frequency

on a conventional mode. When the trunked system returns to normal operation, the radio will automatically leave the failsoft operation and return to trunked operation.

During failsoft operation,

1	You will hear a faint “beeping” sound every ten seconds.	Alternates between FAILSOFT and PLANT POLICE
2	Your radio becomes unsquelched.	

MUTING THE KEYPAD TONES

The radio’s keypad tones, normally heard each time a keypad key is pressed, can be turned off (muted) or on (unmuted) at your discretion. To use the keypad mute feature:

1	until *MUTE* is displayed.	ZONE MUTE CALL
2	Press the softkey below the desired mute state (on or off). The radio returns to the home display.	PLANT POLICE
3	(the softkey below *MUTE*).	You will see the current mute state momentarily TONES ON or TONES OFF Then ON OFF

Note: Pressing or the PTT switch will exit this menu without changing the mute selection.

SCAN

This section outlines the scan functions of your radio. All references to what is shown on the display is only valid for PRO7550/PRO7650 radios. Throughout this section, the display below

PLANT POLICE

is used to indicate the radio's home display.

SCAN OPERATION

The scan feature allows you to monitor activity on different conventional or trunked modes by scanning a *scan list* of modes. This list can be programmed with the Customer Programming Software (CPS) or user programmable.

The table below lists the types of scan operations available depending on radio model.

Conventional	Comprises Conventional-Only Modes.
Talkgroup Scan	Comprises conventional modes and trunked modes from more than one trunking system.

Automatic scanning (autoscan) can be programmed through the CPS. If autoscan is enabled for a mode, your radio begins scanning, using the mode's scan list, whenever you select that mode. The radio will continue autoscanning until you select a mode that does not have autoscan enabled.

Turning Scan On or Off with the Keypad)

1	until *SCAN* is displayed.	PHON SCAN CALL
2	(the softkey below *SCAN*).	You will see the current scan state momentarily. SCAN ON or SCAN OFF Then ON OFF

SCAN

3	Press the softkey below the desired scan state (on or off). The radio returns to the home display.	PLANT POLICE

Note: The scan status annunciator, Z, is displayed when the scan operation is active. It will be removed from the display when the scan operation is terminated.

Deleting Nuisance Modes

When the radio scans to a mode you do not wish to monitor (nuisance mode), you can temporarily delete that mode from the scan list.

1	When your radio is locked on the mode to be deleted, press the nuisance-mode delete button (programmed via the CPS).
2	A valid-keypress chirp is heard, indicating that the mode has been deleted.
3	The radio continues scanning the remaining modes in the list.
4	To resume scanning the deleted mode, you must leave and reenter scan operation.

Viewing a Scan List

The *view scan list* feature allows you to view the members of the scan list associated with the currently selected mode.

To view a scan list

1	until *VIEW* is displayed.	PAGE STS VIEW
2	(the softkey below *VIEW*).	PHON SCAN CALL
3	(the softkey below *SCAN*). The display shows the first member of the scan list.	For example FIRE DEP
4	Every subsequent press of will scroll through subsequent members of the scan list.	
5	To leave the scan list feature, press the **HOME** key, or the **PTT** button, or turn the mode selector knob.	
6	The radio returns to the home display.	PLANT POLICE

Note: The programming-mode annunciator, ☐, is displayed while list view mode is active.

- The scan status annunciator, Z, appears, indicating that a scan list is being viewed.

Programming a Scan List

The program scan list feature allows you to program the members of the scan list associated with the currently selected mode.

To program a scan list

1	▶ until *PROG* is displayed.	PROG
2	● (the softkey below *PROG*).	SCAN PHON CALL
3	● (the softkey below *SCAN*). The display shows the current mode selected.	For example FIRE DEPT
4	Use the mode selector knob to select the required talkgroup zone.	
5	◀ or ▶ to select the required zone. If the scan status annunciator Z is displayed, the mode is part of the scan list.	
6	Press the select key to enable or disable the scan mode.	
7	After making all the changes, select the required operating mode.	
8	Press the **HOME** key, or the **PTT** button, or turn the mode selector knob to commit all the changes made.	

Note: The programming-mode annunciator, K, blinks while program mode is active.

Notes

TRUNKED FEATURES

This section outlines the trunked features of your radio. All references to what is shown on the display is only valid for PRO7550/PRO7650 radios. Throughout this section, the display below

PLANT POLICE

is used to indicate the radio's home display.

VIEWING YOUR RADIO'S ID NUMBER

To view your radio's ID number:

1	until *CALL* is displayed.	ZONE MUTE CALL
2	(the softkey below *CALL*).	
3	The display shows the last ID number transmitted or received.	ID: 722588
4	.	
5	The display shows your radio's ID number.	my id 741317
6	to return the radio to the home display.	

Note: If your radio has been so programmed, you can press the call button for quick access to viewing your radio's ID number. This takes you directly to step 3.

ENHANCED PRIVATE CALL OPERATION

The Enhanced Private Conversation feature not only allows you to have a conversation that is heard only by the two parties involved, but also enables you to determine whether the radio that you are calling is in service. The radio being called can also view the calling radio's ID number before answering. You can then choose whether or not to leave your radio's ID number (via a Call Alert page) with the radio you are calling so that you may be called back. Enhanced Private Conversation operation is similar to telephone operation.

Answering a Private Call

1	Upon receiving a Private Conversation call, two alert tones sounds (repeating every five seconds for 20 seconds).	Alternates between `CALL` and `PLANT POLICE`
2	The green LED and call received status annunciator, ♪, will blink indicating that a call is being received. You have 20 seconds to answer the call before the radio automatically returns to the home display.	
3	Press the call response button or the call button.	
4	The display shows the incoming caller's ID number, and the call received annunciator will turn off.	`ID: 722588`
5	After viewing the caller's ID number, you can decide to either talk privately (go to next step), or not answer the call by pressing the call response or call button to return to the home display.	
6	If you decide to answer the call, press the **PTT** button.	
7	The caller's ID number remains displayed for the duration of the call.	`ID: 722588`
8	When finished with conversation, press or the call response button to hang up.	
9	The radio will return to the home display.	`PLANT POLICE`

Note: If you press the **PTT** button before you press the call response button, the response will be transmitted to everyone in the talkgroup (a dispatch mode operation).

- After answering a Private Call, the caller's ID number is stored in your radio as the "*last ID number received*".
- If your radio is configured for Private Call II, upon receiving a Private Conversation call, two alert tones sounds, followed by the received voice.

Making a Private Call

There are four phases in making a private call, namely:

- initiating a private call,
- entering the desired radio ID number,
- sending the radio ID number, and
- having the conversation and hanging-up.

Initiating a Private Call

1	until *CALL* is displayed.	ZONE MUTE CALL
2	(the softkey below *CALL*).	
3	The display shows the last ID number transmitted or received.	ID: 722588

Entering the Desired Radio ID Number

If the last ID number called is the desired number, go directly to step 5.

To enter a new number

4a	Enter the new six-digit ID number using the keypad.
4b	On the display, the old ID number disappears and the new digits appear as they are being entered.
4c	The cursor flashes indicating the location of the next number to be entered

Note: Exactly six digits must be entered for the radio ID number. If fewer than six digits were entered, you will hear a bad-keypress tone and the display will show "**INVALID ENTRY**" when attempting to send the radio ID number. A bad-keypress tone will also be heard if you try to enter a seventh digit.

- Once you have started entering numbers, the key functions as a backspace key. Pressing it causes the last digit entered to be erased, and the cursor moves to the left. When the last digit is erased, an additional press of this key causes the last member of the preprogrammed call list to be displayed; pressing shows the first member of the list.

To enter a number from a location in the call list

4a	or to enter the call list.
4b	Enter the first digit of the location number. If there are fewer than 10 members in the list, go directly to step 4e.

4c If there are 10 or more members in the list, the display shows "**ID LOC#X_**" (where X is the first digit). The cursor blinks to show the location of the second digit.

4d Enter the second digit of the location number.

4e The radio goes to that position in the list. The display alternates between showing the member's name and ID number.

Alternates between

GILBERTO

and

ID: 784116

Note: The last member of the list is also the "last ID transmitted or received" at position "00" on the list.

- If you enter a location number that does not exist (for example, "15"), the display will show "**INVALID ENTRY**," and the radio will sound an invalid-keypress tone and return back to step 4b of this procedure.

Sending the Radio ID Number

5 Press the **PTT** button to transmit the ID number.

6 If the radio you are calling is on the air, you will hear a telephone-type ringing for 20 seconds, or until the called radio answers the call.

7 If the party you are calling does not answer the call within twenty seconds, the telephone ringing stops and an alert tone sounds.

NO ANSWER

At this point you can either send a Call Alert™ page, or go to step 10 to hang up.

8 If the party you are calling answers the call, you will hear his/her voice.

Note: If the radio you are calling is not in service, you will not hear the ringing and the display will show "**NO ACKNOWLELDGE**". Go to step 10 to hang up.

- If your radio is configured for Private Call II, you will not hear the telephone type ringing. Instead you are able to proceed to talk to the Called party.

Having the Conversation and Hanging-up

9 Press the **PTT** button to have a Private Conversation with the called person.

10 When finished with your conversation, or if the radio you called does not answer or is not in service, press to hang up.

11 The radio will return to the home display.

PLANT POLICE

Note: Once engaged in a private conversation, if the radio is left idle for more than one minute, a momentary warning alert sounds every six seconds to remind you that dispatch calls are not being heard. After two minutes, a permanent invalid mode tone sounds.

Leaving a Call Alert™ Page

1 If the party you want to have a Private Call does not answer the call within twenty seconds, you can choose to leave a Call Alert™ page. This leaves your radio's ID number with the called radio so you can be called back later.

2 Press the **PTT** button to send the Call Alert page. You will hear five beeps, indicating that the system has received your ID number and the radio you are calling is on the air.

3

4 The radio will return to the home display.

PLANT POLICE

CALL ALERT™ OPERATION

Answering a Call Alert™ Page with a Group Call

1. Upon receiving a Call Alert page, four alert tones sounds (repeats every 5 seconds).
2. The green LED lights and the Call Received annunciator, ♪, blinks indicating a call is received.
3. Press the **PTT** button to answer the page.
4. The display shows the current talkgroup. The audible alert, LED and call received annunciator turns off.

   FIRE DEPT

5. The ID number of the radio that paged you is stored as “the last ID number received.”
6. Have your conversation in the normal manner; all members of your talkgroup will hear your response. Press the **PTT** button to talk; release the button to listen.

Note: When you received a Call Alert page, you can enter Private Call mode and call the paging radio using the latest ID received.

Making a Call Alert™

There are three phases in making a call alert, namely:

- initiating a call alert,
- entering the radio ID number that you wish to page, and
- sending the call alert

Initiating a Call Alert

1. until *PAGE* is displayed.

   PAGE PHON VIEW

2. (the softkey below *PAGE*).
3. The display shows the last ID number transmitted or received.

   ID: 722588

Note: The same list is shared by both Call Alert and Private Conversation features.

- If your radio has been so programmed, you can press the page button for quick access to the Call Alert feature. This will take you directly to step 3.

Entering the Radio ID Number that you Wish to Page

If the last ID number called or received is the desired number, go directly to step 5.

To enter a new number

4a.	Enter the new six-digit ID number using the keypad.
4b.	On the display, the old ID number disappears and the new digits appear as they are being entered.
4c.	The cursor flashes indicating the location of the next number to be entered.

Note: Exactly six digits must be entered for the radio ID number. If fewer than six digits were entered, you will hear a bad-keypress tone when attempting to send the radio ID number. A bad-keypress tone will also be heard if you try to enter a seventh digit.

- Once you have started entering numbers, the ◀ key functions as a backspace key. Pressing it causes the last digit entered to be erased, and the cursor moves to the left. When the last digit is erased, an additional press of this key causes the last member of the preprogrammed call list to be displayed; pressing ▶ shows the first member of the list.

To enter a number from the call list

4a.	◀ or ▶.	
4b.	▶ takes you forward to the first or next member of the list; ◀ takes you backwards to the last or previous member of the list.	
4c.	When at a member of the list, the display alternates between showing the member's name and ID number.	Alternates between GLORIA and ID: 784116

To enter a number from a location in the call list

4a.	◀ or ▶ to enter the call list.
4b.	Enter the first digit of the location number. If there are fewer than 10 members in the list, go directly to step 4e.

4c. If there are 10 or more members in the list, the display shows "**ID LOC#X_**" (where X is the first digit). The cursor blinks to show the location of the second digit.

4d. Enter the second digit of the location number.

4e. The radio goes to that position in the list. The display alternates between showing the member's name and ID number.

Alternates between

GLORIA

and

ID: 784116

Note: The last member of the list is also the "last ID transmitted or received" at position "00" on the list.

If you enter a location number that does not exist (for example, "15"), the display will show "**INVALID ENTRY**," and the radio will sound an invalid-key-press tone and return back to step 4b of this procedure.

Sending the Call Alert

5. Press the **PTT** button to transmit the ID number.

If the page is unsuccessful

6a. If you hear one beep, the ID number has been received by the system, but the radio you are paging is not on the air; your radio remains in the Call Alert mode.

If after six seconds the called radio fails to acknowledge the alert, a low-pitched alert tone sounds and the display changes to "**NO ACKNOWLEDGE**".

6b. Press the **PTT** button to send the ID number again, or press to hang up and return to the home display.

If the page is successful

6a. If you hear five beeps, the ID number has been received by the system, and the radio you are paging is on the air and has received your page.

6b. The radio automatically returns to the home display

PLANT POLICE

PROGRAMMING THE RADIO'S LISTS

Programming the Telephone List Numbers

This feature lets you use the radio's keypad to change the telephone numbers assigned to any of the telephone list members. Each phone number can have up to 16 digits.

To change the telephone list

1. ▶ until *PROG* is displayed.

   PROG

2. ● (the softkey below *PROG*).

   SCAN PHON CALL

3. ● (the softkey below *PHON*). The display shows the first programmable member of the telephone list.

   FIRE DEPT

4. ▶ or ◀,

   —or—

   Use the keypad to enter the desired member's position number (1 to 19) to view the other members of the telephone list.

5. When you stop on a member of the list, the display will alternate between showing the member's name and telephone number.

   Alternates between

   POLICE DEPT

   and

   5556213

6. Press the *select* key to enter edit mode.

7. A short press would enable the editing of the telephone number. The display shows the current member's telephone number.

   5556213

8. A long press would enable the editing of the member's name. The display shows the current member's name.

   POLICE DEPT

9. Use any of the alphanumeric keys to make the changes. The blinking cursor indicates the position of the next number to be added. If you require a pause in the phone dialing sequence (to allow for a delay), you can do so by first pressing the "*" key, followed by pressing the "#" key. The display will show a "**P**" for pause (see page 16).

10. When you have finished changing the telephone number, press the *select* key again. The change is saved in the radio's memory.

11. You are returned to step 5. The display will again alternate between showing the member's name and telephone number. You can now change additional numbers.

Alternates between

POLICE DEPT

and

5556445

12. When you have finished making changes, press to exit program mode.

13. The radio will return to the home display.

PLANT POLICE

Note: The programming-mode annunciator, , blinks while program mode is active.

- In the edit mode, the key functions as a backspace key. Pressing it will erase the previous digit, and the cursor will move to the left. When the last digit on the display has been erased, additional presses of this key or the key will cause you to leave the edit mode without making any changes.
- You can only enter a maximum of 16 digits in any entry for the telephone list. When this maximum is reached, the cursor will disappear. If you try to add any more digits, you will hear an invalid (bad) keypress alert tone.

Programming the Call List

This feature lets you use the radio's keypad to change the radio ID numbers assigned to the call list used by the trunked Private Conversation™ and Call Alert™ features.To change the call list radio ID numbers.

1. until *PROG* is displayed.

DIR PHON PROG

2. (the softkey below *PROG*).

SCAN PHON CALL

3. (the softkey below *CALL*). The display shows the first programmable member of the call list.

RICARDO

4. (the softkey below *CALL*). The display shows the first programmable member of the call list.

5. or
—or—
Use the keypad to enter the desired member's position number (1 to 19) to view the other members of the call list.

6. When you stop on a member of the list, the display will alternate between showing the member's name and radio ID number.

Alternates between

GILBERTO

and

ID: 753951

7. Press the *Select* key (see page 15) to enter edit mode.

8. A short press would enable the editing of the radio ID. The display shows the current member's radio ID number.

ID: 753951

9. A long press would enable the editing of the member's name. The display shows the current member's name.

GIBERTO

10. Use any of the alphanumeric keys to make the changes. The blinking cursor indicates the position of the next number to be adsee page 16see page 16).

11. When you have finished changing the number, press the *select* key again. The change is saved in the radio's memory.

12. You are returned to step 5. The display will again alternate between showing the member's name and radio ID number. You can now change additional numbers.

Alternates between

GILBERTO

and

ID: 753853

13. When you have finished making changes, press to exit program mode.

14. The radio will return to the home display.

PLANT POLICE

Note: The programming-mode annunciator, ▭, blinks while program mode is active.

- In the edit mode, the ◀ key functions as a backspace key. Pressing it will erase the previous numeric digit, and the cursor will move to the left. When the last digit on the display has been erased, additional presses of this key or the ▶ key will cause you to leave the edit mode without making any changes (see page 18).
- When the maximum number of digits for the radio ID is reached, the cursor will disappear. If you try to add any more digits, you will hear an invalid (bad) keypress alert tone.

TRUNKED TELEPHONE OPERATION

The trunked telephone feature allows you to receive calls using your trunked radio. When you are dialing from the keypad, your radio may be programmed with either buffered dial (you enter all digits and press the **PTT** button before the digits are sent out) or live dial (each digit is sent out as it is pressed).

Answering a Telephone Call

1.	When a telephone call is being received, you will hear telephone-type ringing.	Alternates between PLANT POLICE and PHONE CALL
2.	Press the pre-programmed phone button or call response button to answer the call.	PHONE CALL
3.	Carry on with your conversation in the normal manner. Press the **PTT** button to talk; release the **PTT** button to listen.	
4.	When you have finished your conversation, press ⏻ or the phone button to hang up.	
5.	The radio will return to the home display.	PLANT POLICE

Note: The call received status annunciator, ♪, flashes when you receive a call, but is not displayed when you answer the call.

Making a Telephone Call

There are three phases in making a phone call, namely:

- accessing the telephone system,
- sending the telephone number,
- having the conversation and hanging-up.

Accessing the Telephone System

1. until *PHON* is displayed.

   MSG SCAN PHON

2. (the softkey below *PHONE*).
3. Your radio attempts to access the telephone system.
4. If you connect successfully, you will hear a dial tone.
5. The display will show the last number dialed.

   5551135

Sending the Telephone Number

Sending the telephone number using the keypad

6a. The number can now be entered from the keypad, using any of the numeric (**0 – 9**) keys, and the "*" and "#" keys. The cursor flashes to indicate the location of the next digit to be entered. A pause can be entered in the telephone number by first pressing the "*" key, then the "#" key (Buffered dial only - The pause will be shown on the display as a "**P**").

6b. If your radio is programmed for "live dial," each digit is sent out as its key is pressed.

—or—

If your radio is programmed for "buffered dial," each digit is temporarily stored as you enter them. After entering the number, press the **PTT** button to send out the number.

6c. The telephone number will be sent out; you will hear tones as they are sent. If you hear a busy signal, go to step 8 for hang-up procedure.

Sending the telephone number using a number on the telephone list

6a. ◀ or ▶, to enter the telephone list. ▶ takes you forward to the next member of the list; ◀ takes you backwards to the previous member of the list.

6b. Stop at the member you wish to call.

6c. The display alternates between showing the member's name and telephone number.

Alternates between

POLICE DEPT

and

5556445

6d. Press the **PTT** button.

6e. The telephone number will be sent out; you will hear tones as they are sent.

POLICE DEPT

6f. If you hear a busy signal, go to step 8 for hang-up procedure.

Sending the telephone number using a location in the telephone list

6a. ◀ or ▶, to enter the telephone list.

6b. Enter the location (any preprogrammed location from 1 through 19) of the number you wish to call.

6c. The radio will go to the selected location.

6d. The display alternates between showing the member's name and telephone number.

Alternates between

POLICE DEPT

and

5556445

6e. Press the **PTT** button.

6f. The telephone number will be sent out; you will hear tones as they are sent.

POLICE DEPT

6g. If you hear a busy signal, go to step 8 for hang-up procedure.

Having the Conversation and Hanging Up

7. If call is answered, communicate in the normal manner. Press the **PTT** button to talk; release the **PTT** button to listen.

8. When finished with your conversation, or if the number you called is busy or does not answer, press or the phone button to send the hang-up code.

9. The radio will return to the home display.

PLANT POLICE

- You can press the pre-programmed phone button for quick access to the telephone call feature. This will take you directly to step 3.
- The “PLEASE WAIT” message is a timed message. If you cannot access the telephone system (no dial tone heard), press key or the phone button to hang up, and start again at step 1 of this procedure.
- If you are out of range of the trunked system or the phone interconnect is out of service, “NO PHONE” is displayed and a continuous low-pitched tone sounds.
- If the trunked phone interconnect is in use, a busy tone sounds and “PHONE BUSY” is displayed.
- When the maximum number of digits have been entered (buffered dial only), the cursor will disappear.
- In the edit mode, the, key functions as a backspace key. Pressing this key erases the last digit entered, and moves the cursor to the left. When the last digit on the display is erased, additional presses of this key causes the last member of the preprogrammed telephone list to be displayed; pressing the / key displays the first member of the list.
- After reaching the number you are calling, you may need to dial an extension number before you can reach your party. Here, enter the extension number from the keypad or (if so programmed) use the arrow keys to find the extension number in the telephone list. If you have live dial, the number is sent as the keys are pressed. If you have buffered dial, press the PTT button again to send out the extension number.
- Motorola trunked radios generate a high-pitched go-ahead tone when the systems **PTT** button is released. This is heard by the land-line party and is an indicator to begin talking.

AUTOMATIC MULTIPLE SITE SELECTION (AMSS) (PRO7650 ONLY)

Note: This feature is only available in the PRO7650 model. Availability of this feature is limited to customers operating in a wide-area trunking system only.

Forcing a Site Change

1. Press and hold down the search button to force the change to a new site.
2. You will hear a tone while the radio scans for a new site.

   SCANNING

3. The radio automatically returns to the home display.

   PLANT POLICE

Locking and Unlocking a Site

1. until *SITE* is displayed.

   SITE PAGE CALL

2. (the softkey below *SITE*).
3. The current lock state is momentarily displayed.

   SITE LOCKED

   SITE LOCKED

4. The display changes to

   LOCK UNLK

5. Press the key below the desired lock state.
6. The radio automatically returns to the home display.

   PLANT POLICE

CONVENTIONAL CALL

This section outlines the conventional features of your radio. .

SELECTING A CONVENTIONAL CHANNEL

Use the Mode Selector knob to select the appropriate conventional channel.

SENDING A CONVENTIONAL CALL

Note: In the United States, FCC regulations require you to monitor the conventional channels before sending a call. The monitor feature (see page 8) can be accessed through one of your programmable buttons.

To send a conventional call

1 Hold the radio in a vertical position at a distance of about 1 to 2 inches (2.5 to 5 cm) from your mouth.

2 Press the **PTT** button and speak clearly into the microphone. The LED indicator lights steady red while the call is being sent.

3 Release the **PTT** button to listen.

REPEATER OR TALKAROUND MODE

This feature allows you to bypass the repeater and talk directly to another portable radio. This is known as the talkaround mode. The transmit frequency is the same as the receive frequency.

- In REPEATER mode, you talk through the repeater, which increases the radio's operating range. The transmit frequency is not the same as the receive frequency.
- If the REPEATER or TALKAROUND feature is programmed to a mode, that mode operates on either direct or repeat operation.

- If the repeat/direct feature is programmed to the keypad, you can change the repeat/direct setting by doing the following.

1	until *DIR* is displayed.	DIR PWR PROG
2	(the softkey below *DIR*).	
3	The current talkaround state appears on the display for a few seconds.	REPEATER MODE or DIRECT MODE
4	Then, the display prompts for the new state.	DIR RPTR
5	below the desired talkaround state: repeat (*RPTR*) or direct (*DIR*).	
6	The radio returns to the home display.	PLANT POLICE

SMART PTT

Smart PTT is a per-mode feature which gives the system manager better control of radio operators.

When smart PTT is enabled in your radio, you cannot transmit on an active mode. Three radio-wide variations of smart PTT are available.

- **Transmit Inhibit on Busy Mode**—you are prevented from transmitting if any activity is detected on the mode.
- **Transmit Inhibit on Busy Mode with Wrong Squelch Code**—you are prevented from transmitting on an active mode with a squelch code other than your own. If the PL code is the same as yours, you are allowed to transmit.
- **Quick-Key Override**—This feature can work in conjunction with either of the two above variations. This feature allows you to override the transmit-inhibit state by quick-keying (two **PTT** button presses within a programmable period -- the default is one second -- of each other) the radio.

Note: If you try to transmit (press the **PTT** button) on a smart PTT mode that is busy, a continuous alert tone is generated until the **PTT** button is released; the transmission is inhibited.

- The red LED blinks when the radio is receiving indicating that the mode is busy.

WARRANTY

LIMITED WARRANTY
MOTOROLA COMMUNICATION PRODUCTS

I. WHAT THIS WARRANTY COVERS AND FOR HOW LONG:

MOTOROLA INC. (“MOTOROLA”) warrants the MOTOROLA manufactured Communication Products listed below (“Product”) against defects in material and workmanship under normal use and service for a period of time from the date of purchase as scheduled below:

PRO7550/PRO7650 Portable Units	Two (2) Years
Product Accessories	One (1) Year

Motorola, at its option, will at no charge either repair the Product (with new or reconditioned parts), replace it (with a new or reconditioned Product), or refund the purchase price of the Product during the warranty period provided it is returned in accordance with the terms of this warranty. Replaced parts or boards are warranted for the balance of the original applicable warranty period. All replaced parts of Product shall become the property of MOTOROLA.
This express limited warranty is extended by MOTOROLA to the original end user purchaser only and is not assignable or transferable to any other party. This is the complete warranty for the Product manufactured by MOTOROLA.
MOTOROLA assumes no obligations or liability for additions or modifications to this warranty unless made in writing and signed by an officer of MOTOROLA.
Unless made in a separate agreement between MOTOROLA and the original end user purchaser, MOTOROLA does not warrant the installation, maintenance or service of the Product.

MOTOROLA cannot be responsible in any way for any ancillary equipment not

furnished by MOTOROLA which is attached to or used in connection with the Product, or for operation of the Product with any ancillary equipment, and all such equipment is expressly excluded from this warranty. Because each system which may use the Product is unique, MOTOROLA disclaims liability for range, coverage, or operation of the system as a whole under this warranty.

II. GENERAL PROVISIONS:

This warranty sets forth the full extent of MOTOROLA'S responsibilities regarding the Product. Repair, replacement or refund of the purchase price, at MOTOROLA's option, is the exclusive remedy. THIS WARRANTY IS GIVEN IN LIEU OF ALL OTHER EXPRESS WARRANTIES. IMPLIED WARRANTIES, INCLUDING WITHOUT LIMITATION, IMPLIED WARRANTIES OF MERCHANTABILITY AND FITNESS FOR A PARTICULAR PURPOSE, ARE LIMITED TO THE DURATION OF THIS LIMITED WARRANTY. IN NO EVENT SHALL MOTOROLA BE LIABLE FOR DAMAGES IN EXCESS OF THE PURCHASE PRICE OF THE PRODUCT, FOR ANY LOSS OF USE, LOSS OF TIME, INCONVENIENCE, COMMERCIAL LOSS, LOST PROFITS OR SAVINGS OR OTHER INCIDENTAL, SPECIAL OR CONSEQUENTIAL DAMAGES ARISING OUT OF THE USE OR INABILITY TO USE SUCH PRODUCT, TO THE FULL EXTENT SUCH MAY BE DISCLAIMED BY LAW.

III. STATE LAW RIGHTS:

SOME STATES DO NOT ALLOW THE EXCLUSION OR LIMITATION OF INCIDENTAL OR CONSEQUENTIAL DAMAGES OR LIMITATION ON HOW LONG AN IMPLIED WARRANTY LASTS, SO THE ABOVE LIMITATION OR EXCLUSIONS MAY NOT APPLY.

This warranty gives specific legal rights, and there may be other rights which may vary from state to state.

IV. HOW TO GET WARRANTY SERVICE:

You must provide proof of purchase (bearing the date of purchase and Product item serial number) in order to receive warranty service and, also, deliver or send the Product item, transportation and insurance prepaid, to an authorized warranty service location. Warranty service will be provided by Motorola through one of its authorized warranty service locations. If you first contact the company which sold you the Product (e.g., dealer or communication service provider), it can facilitate your obtaining warranty service. You can also call Motorola at 1-800-927-2744 US/Canada.

V. WHAT THIS WARRANTY DOES NOT COVER:

A) Defects or damage resulting from use of the Product in other than its normal and customary manner.
B) Defects or damage from misuse, accident, water, or neglect.
C) Defects or damage from improper testing, operation, maintenance, installation, alteration, modification, or adjustment.
D) Breakage or damage to antennas unless caused directly by defects in material workmanship.
E) A Product subjected to unauthorized Product modifications, disassemblies or repairs (including, without limitation, the addition to the Product of non-Motorola supplied equipment) which adversely affect performance of the Product or interfere with Motorola's normal warranty inspection and testing of the Product to verify any warranty claim.
F) Product which has had the serial number removed or made illegible.
G) Rechargeable batteries if:
   1) any of the seals on the battery enclosure of cells are broken or show evidence of tampering.
   2) the damage or defect is caused by charging or using the battery in equipment or service other than the Product for which it is specified.
H) Freight costs to the repair depot.
I) A Product which, due to illegal or unauthorized alteration of the software/ firmware in the Product, does not function in accordance with MOTOROLA's published

specifications or the FCC type acceptance labeling in effect for the Product at the time the Product was initially distributed from MOTOROLA.

J) Scratches or other cosmetic damage to Product surfaces that does not affect the operation of the Product.

K) Normal and customary wear and tear.

VI. PATENT AND SOFTWARE PROVISIONS:

MOTOROLA will defend, at its own expense, any suit brought against the end user purchaser to the extent that it is based on a claim that the Product or parts infringe a United States patent, and MOTOROLA will pay those costs and damages finally awarded against the end user purchaser in any such suit which are attributable to any such claim, but such defense and payments are conditioned on the following:

A) that MOTOROLA will be notified promptly in writing by such purchaser of any notice of such claim;

B) that MOTOROLA will have sole control of the defense of such suit and all negotiations for its settlement or compromise; and

C) should the Product or parts become, or in MOTOROLA's opinion be likely to become, the subject of a claim of infringement of a United States patent, that such purchaser will permit MOTOROLA, at its option and expense, either to procure for such purchaser the right to continue using the Product or parts or to replace or modify the same so that it becomes non-infringing or to grant such purchaser a credit for the Product or parts as depreciated and accept its return. The depreciation will be an equal amount per year over the lifetime of the Product or parts as established by MOTOROLA.

MOTOROLA will have no liability with respect to any claim of patent infringement which is based upon the combination of the Product or parts furnished hereunder with software, apparatus or devices not furnished by MOTOROLA, nor will MOTOROLA have any liability for the use of ancillary equipment or software not furnished by MOTOROLA which is attached to or used in connection with the Product. The foregoing states the entire liability of MOTOROLA with respect to infringement of patents by the Product or any parts thereof.

Laws in the United States and other countries preserve for MOTOROLA certain exclusive rights for copyrighted MOTOROLA software such as the exclusive rights to reproduce in copies and

distribute copies of such Motorola software. MOTOROLA software may be used in only the Product in which the software was originally embodied and such software in such Product may not be replaced, copied, distributed, modified in any way, or used to produce any derivative thereof. No other use including, without limitation, alteration, modification, reproduction, distribution, or reverse engineering of such MOTOROLA software or exercise of rights in such MOTOROLA software is permitted. No license is granted by implication, estoppel or otherwise under MOTOROLA patent rights or copyrights.

VII. GOVERNING LAW:

This Warranty is governed by the laws of the State of Illinois, USA.

ACCESSORIES

Motorola offers a number of accessories to enhance the productivity of your two-way radio. Many of the available accessories are listed below. For a complete list, see your Motorola dealer.

CARRY CASES

HLN9714_	Spring 2 1/2” Belt Clip
HLN9952_	Belt Clip Carry Holder (compatible with all batteries and radios)
HLN9652_	Leather Case, Thin Battery with Belt Loop
HLN9665_	Leather Case, Standard Battery with Belt Loop
HLN9670_	Leather Case, Thin Battery with Swivel
HLN9676_	Leather Case, Standard Battery with Swivel
HLN9677_	Leather DTMF Case, Thin Battery with Belt Loop
HLN9689_	Leather DTMF Case, Standard Battery with Belt loop
HLN9690_	Leather DTMF Case, Thin Battery with Swivel
HLN9694_	Leather DTMF Case, Standard Battery with Swivel
HLN9701B	Nylon Case, Thin Battery with Belt Loop
HLN9844	Spring 1 1/5” Belt Clip

CHARGERS

AAHTN3000_	110V Single-Unit Rapid Charger, US Plug
AAHTN3001_	230V Single-Unit Rapid Charger, Euro Plug
AAHTN3002_	230V Single-Unit Rapid Charger, UK Plug
AAHTN3003_	110V Multi-Unit Rapid Charger, US Plug
AAHTN3004_	230V Multi-Unit Rapid Charger, Euro Plug
AAHTN3005_	230V Multi-Unit Rapid Charger, UK Plug

HEADSETS

AARMN4018	Lightweight Headset with Boom Microphone and In-Line PTT
AARMN4019	Medium Weight Over-the-Head Dual Muff Headset w/Noise Cancelling Mic & In-Line PTT
AARMN4020	Heavy Duty Dual Muff Headset with Noise Cancelling Microphone & PTT
RMN4051	2-Way Hard Hat Mount Headset, Black - Noise Reduction
RMN4052	Tactical Headband-Style Headset, Gray - Noise Reduction
RMN4053	Tactical Hard Hat Mount Headset, Gray - Noise Reduction

RMN4054	Receive Only Hard Hat Mount Headset, Gray - Noise Reduction
RMN4055	Receive Only Headband Style Headset with 3.5mm right angle plug
RKN4097	In-Line PTT Adapter Cable (for use with RMN4051, RMN4052, RMN4053 Head-sets)
BDN6648	Heavy Duty Muff Headset with Noise Cancelling Mic and PTT (must be used with AAHLN9716 Adapter)

REMOTE SPEAKER MICROPHONES

AAHMN9052_	Standard Remote Speaker Microphone
AAHMN9053_	Noise-Cancelling Remote Speaker Microphone

ADAPTERS

HLN9716_	Adapter for Audio Accessories
HLN9717_	Adapter for the 3.5mm Audio Accessories

BATTERIES

HNN9008_R	Small NiMH, High-Capacity
HNN9009_R	Large NiMH, Ultra-High-Capacity
HNN9010_R	Large NiMH, Ultra-High-Capacity FM
HNN9011_R	Large NiCd, High-Capacity FM
HNN9012_R	Large NiCd, High-Capacity
HNN9013_R	Slim Li-Ion, High-Capacity

MISCELLANEOUS

HLN9820	Dust Cover for Accessory Connector

ANTENNAS

VHF	136 - 174 MHz, Ferrule Connector
PMAD4012_	VHF 136–155 MHz 9 cm, Stubby
PMAD4013_	VHF 155–174 MHz 9 cm, Stubby
PMAD4014_	VHF 136–155 MHz 14 cm, Standard Length REd Code
PMAD4015_	VHF 155–174 MHz 14 cm, Standard Length Black Code
HAD9743_	VHF 162–174MHz, Stubby
PMAD4023_	VHF 150–161 MHz
PMAD4025_	VHF 150–161 MHz, Stubby
PMAE4002_	UHF 403–433 MHz
PMAE4003_	UHF 433–470 MHz
NAE6483_R	UHF 403–520 MHz, Whip
PMAE4006_	UHF 470–510 MHz
PMAE4007_	UHF 490–527 MHz
PMAE4008_	UHF 470–530 MHz, Whip
NAF5037_	800 MHz, Whip
NAF5042_R	800 MHz, Stubby

Notes

Answering a Telephone Call

Press the preprogrammed phone button or call response button to answer the call.

Answering a Call Alert™ Page with a Group Call

Press the **PTT** button to answer the page.

Answering a Private Call

Press the call response button or the call button.

Selecting a Conventional Mode

1. Turn the radio on and select the desired conventional zone and mode (see *Selecting a Zone and Mode*).
2. Press and hold the **PTT** switch on the side of the radio and speak slowly and clearly into the microphone area. The red LED lights continuously when the radio is transmitting.

MOTOROLA

PRO7550™ and PRO7650™ Quick Reference Card

Record the functions for your radio's programmable buttons in the table provided below. For further information, see page 22 in this User Guide.

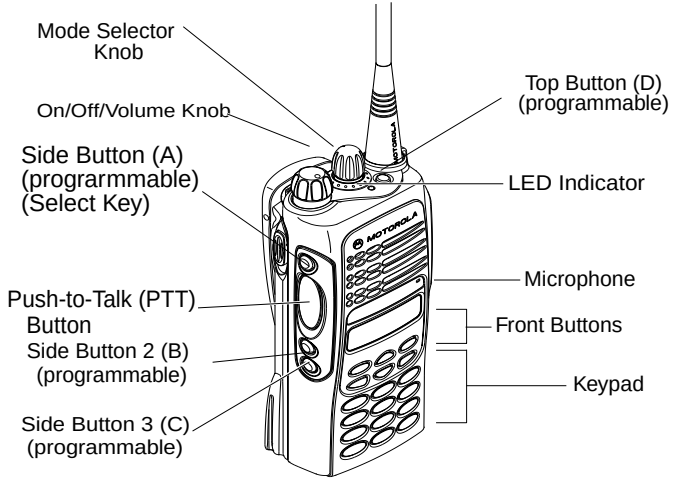

Button	Function	Short Press	Long Press	Hold Down	Page