EXHIBIT 9

INTERNAL PHOTOGRAPHS

(Pursuant to FCC Part 2.1033(b)(7), 2.1033(c)(14) and RSP 100 Sec 4)

The following photographs are attached.	Exhibit
1. RF board with Shields (Top).	9A
2. RF board without Shields (Top).	9B
3. RF board with Shields (Bottom).	9C
4. RF board without Shields (Bottom).	9D
5. RF board with chassis and housing (front side)	9E
6. Chassis and Housing (back side)	9F
7. Keypad board (Top)	9G
8. Keypad board (Bottom).	9H
9. Interface Board (Top)	9I
10. Interface Board (Bottom)	9J
11. GOB board with Shields (Top).	9K
10. GOB board without Shields (Top).	9L
11. GOB board (Bottom).	9M
12. Exploded View of FKP radio	9N
13. Exploded View of NKP radio	9O

Exhibits 9A

Current model

New model (SMA)

RF board <u>with</u> Shields (Top)

Exhibit 9B

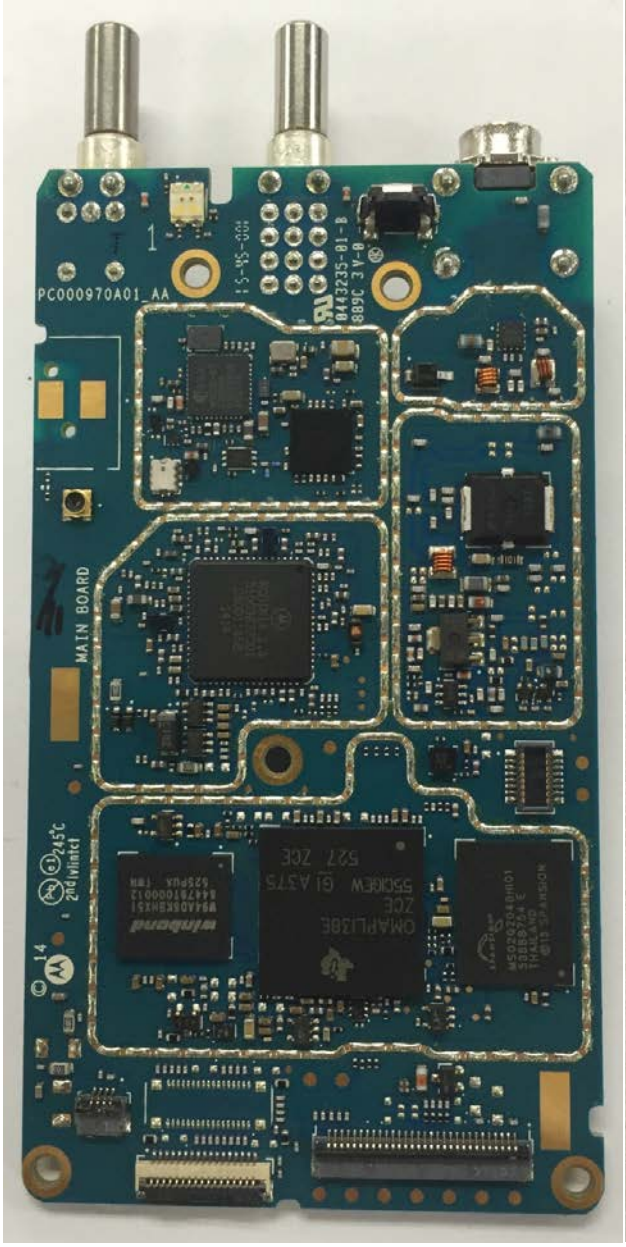

Current model

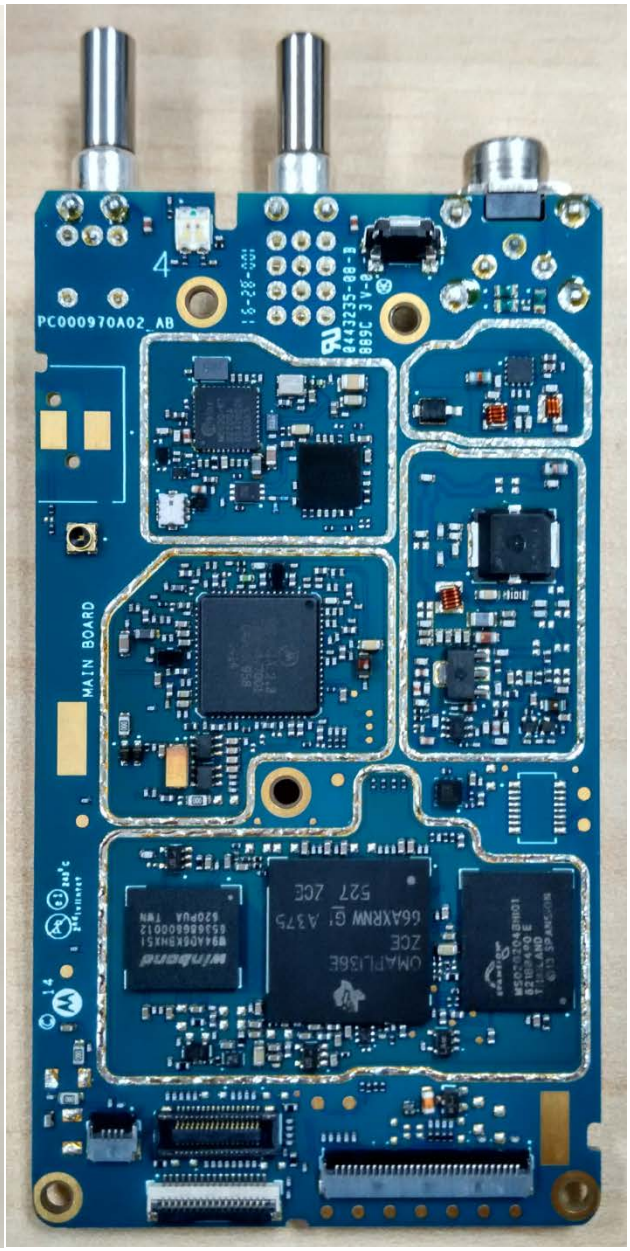

New model (SMA)

RF board <u>without</u> Shields (Top)

Exhibit 9C

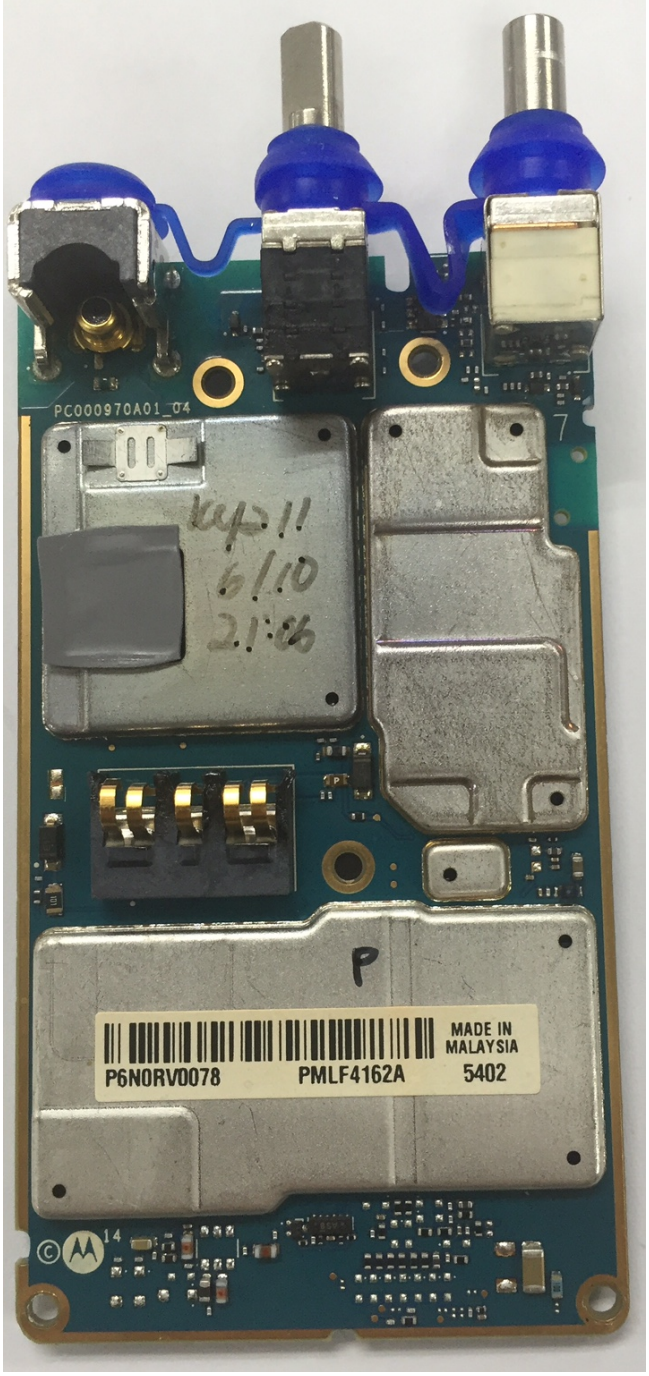

Current model

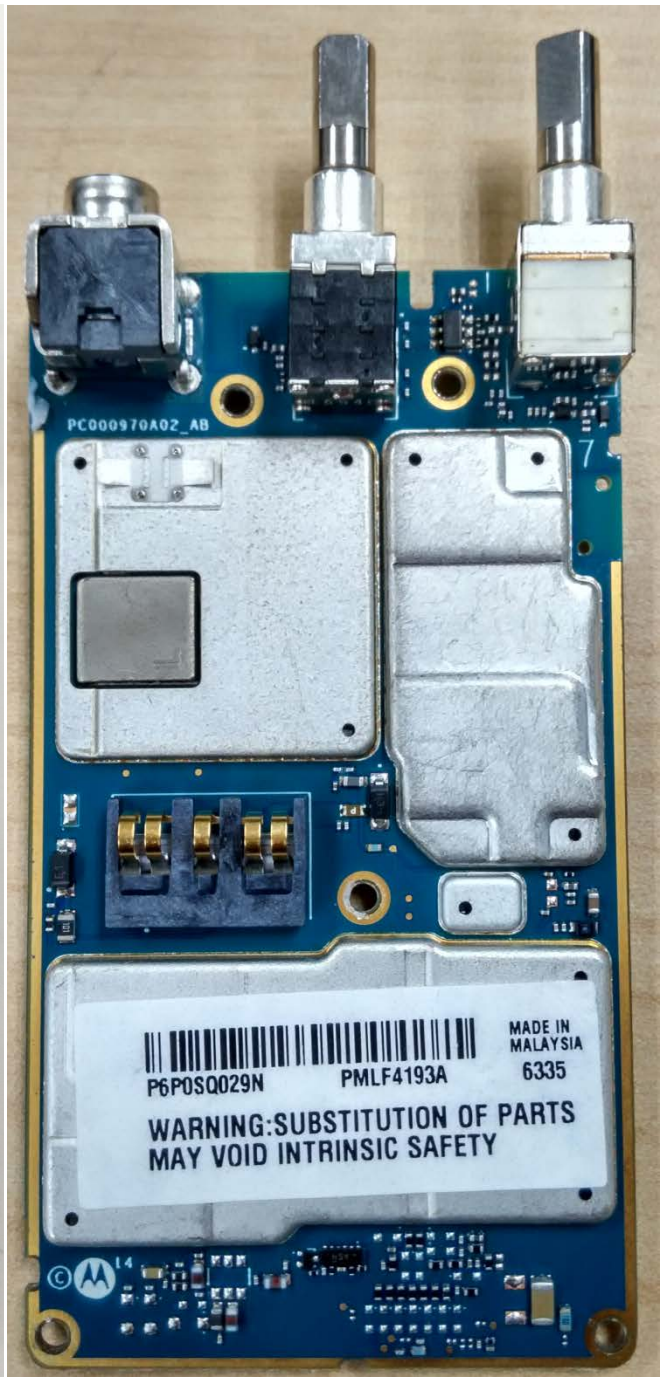

New model (SMA)

RF board <u>with</u> Shields (Bottom)

Exhibit 9D

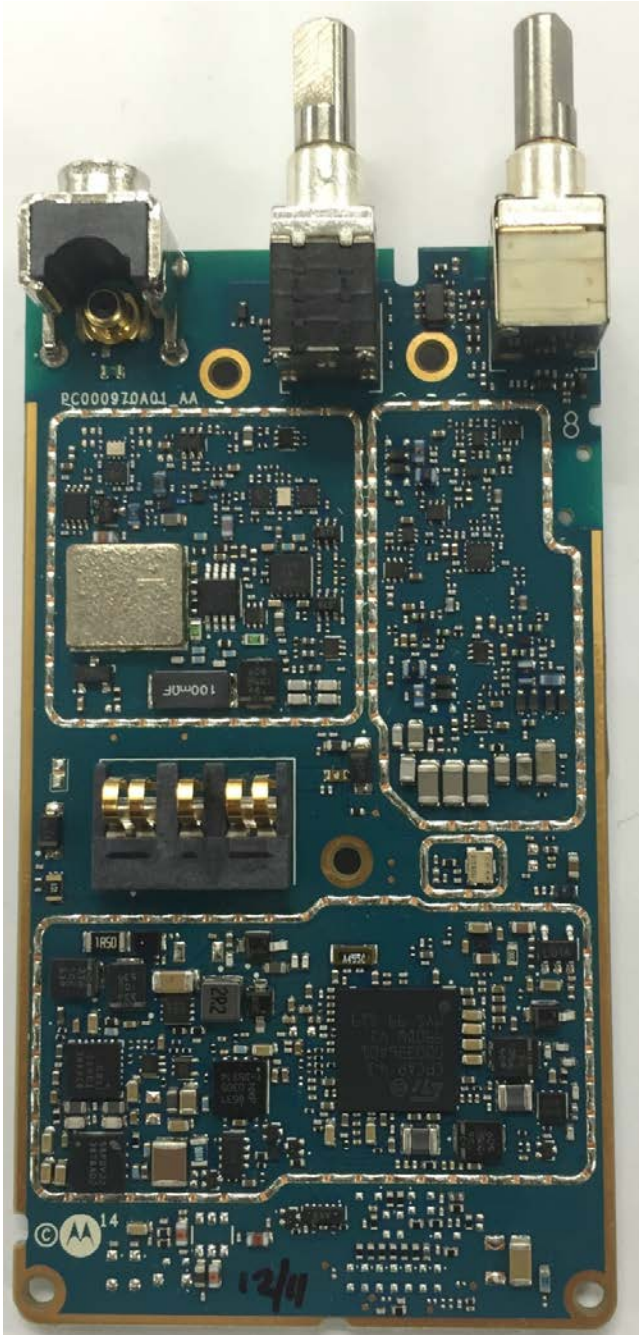

Current model

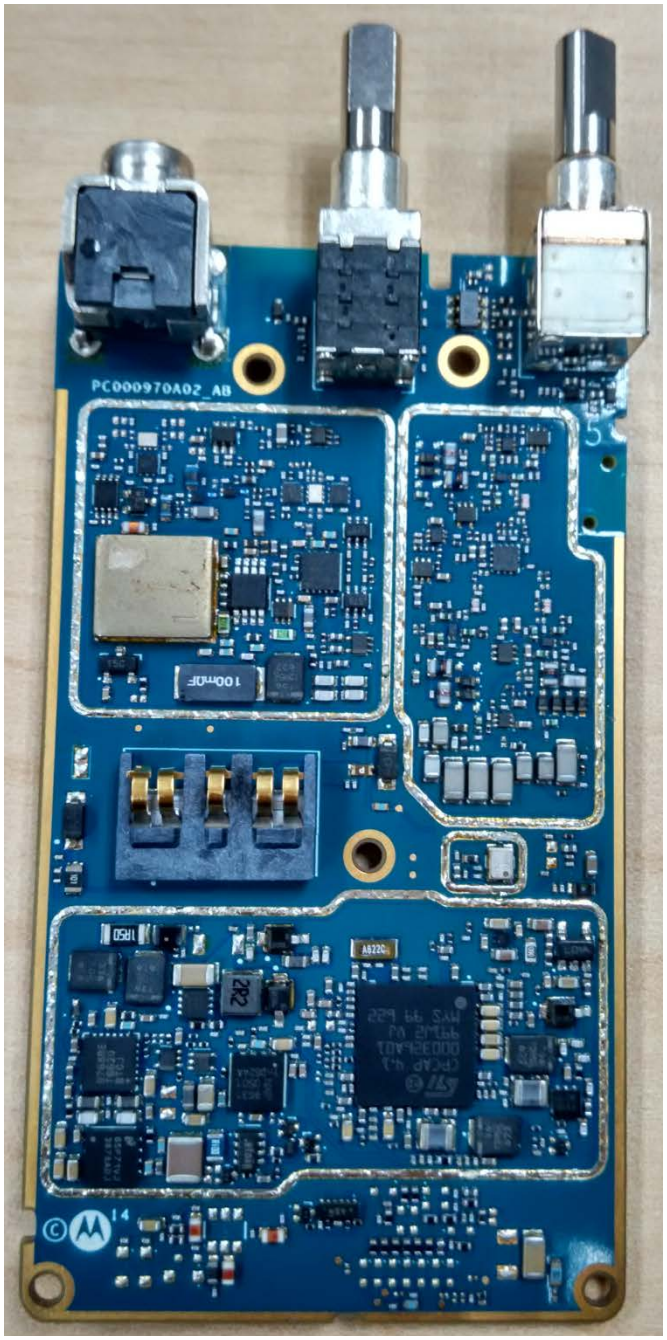

New model (SMA)

RF board <u>without</u> Shields (Bottom)

Exhibit 9E

Current model

RF board <u>with</u> chassis and housing (front side)

New model (SMA model)

RF board <u>with</u> chassis and housing (front side)

New model (SMA)

RF board <u>with</u> chassis and plain housing (front side)

Exhibit 9F

Current model

Chassis and Housing (back side)

New model

Chassis and Housing (back side)

New model (SMA)

Chassis and plain Housing (back side)

Exhibit 9G

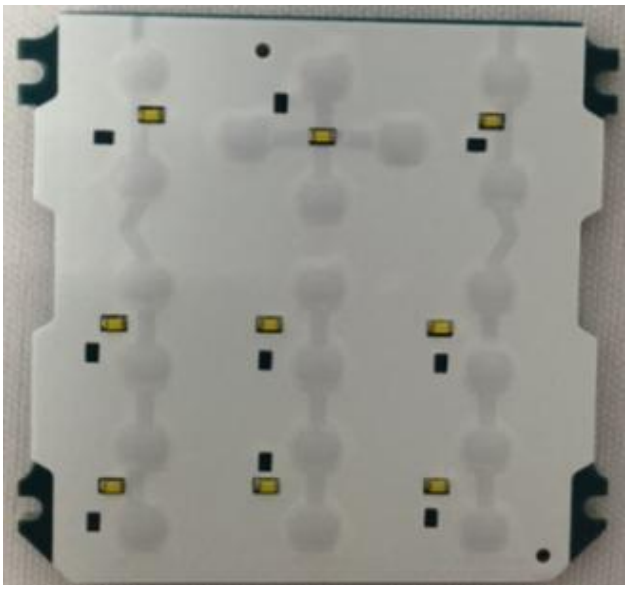

Keypad board (Top) – Current and new model

Exhibit 9H

Keypad board (Bottom) – Current and new model

Exhibit 9I

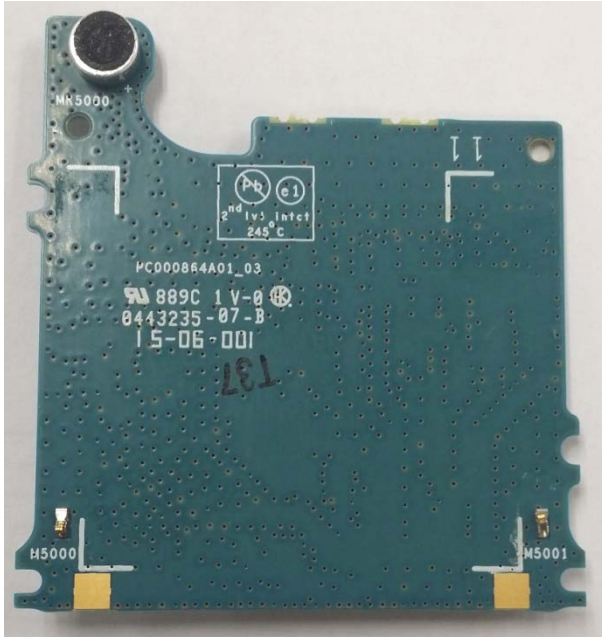

Interface board (Top) – Current and new model

Exhibit 9J

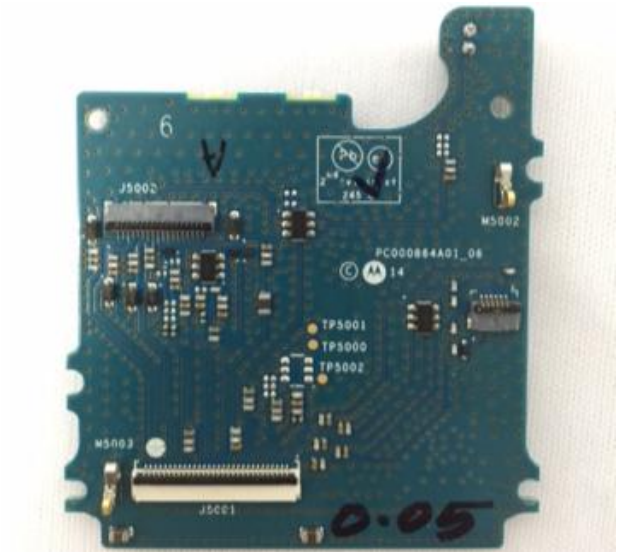

Interface board (Bottom) – Current and new model

Exhibit 9K

GOB board with Shields (Top) – Current and new model

Exhibit 9L

GOB board without shields (Top) – Current and new model

Exhibit 9M

GOB board (Bottom) – Current and new model

Exhibit 9N

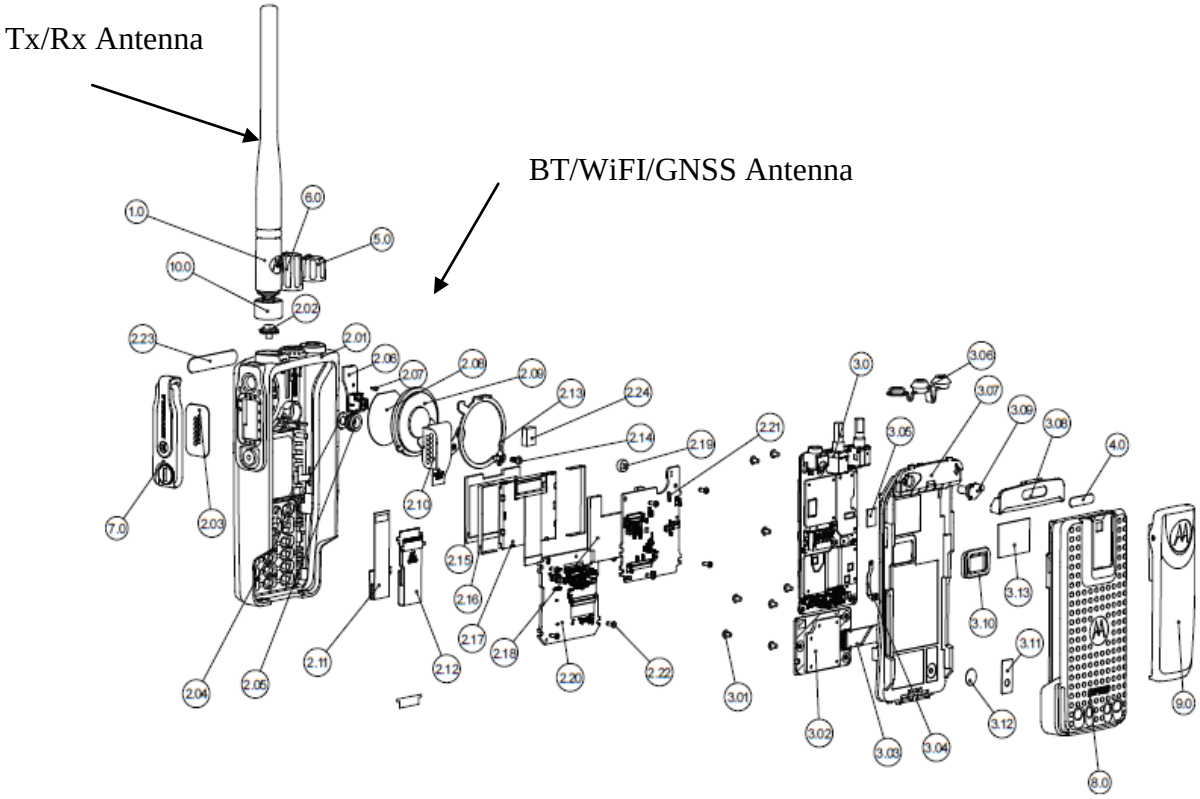

Exploded View of FKP Radio – Current model

Exhibit 9N

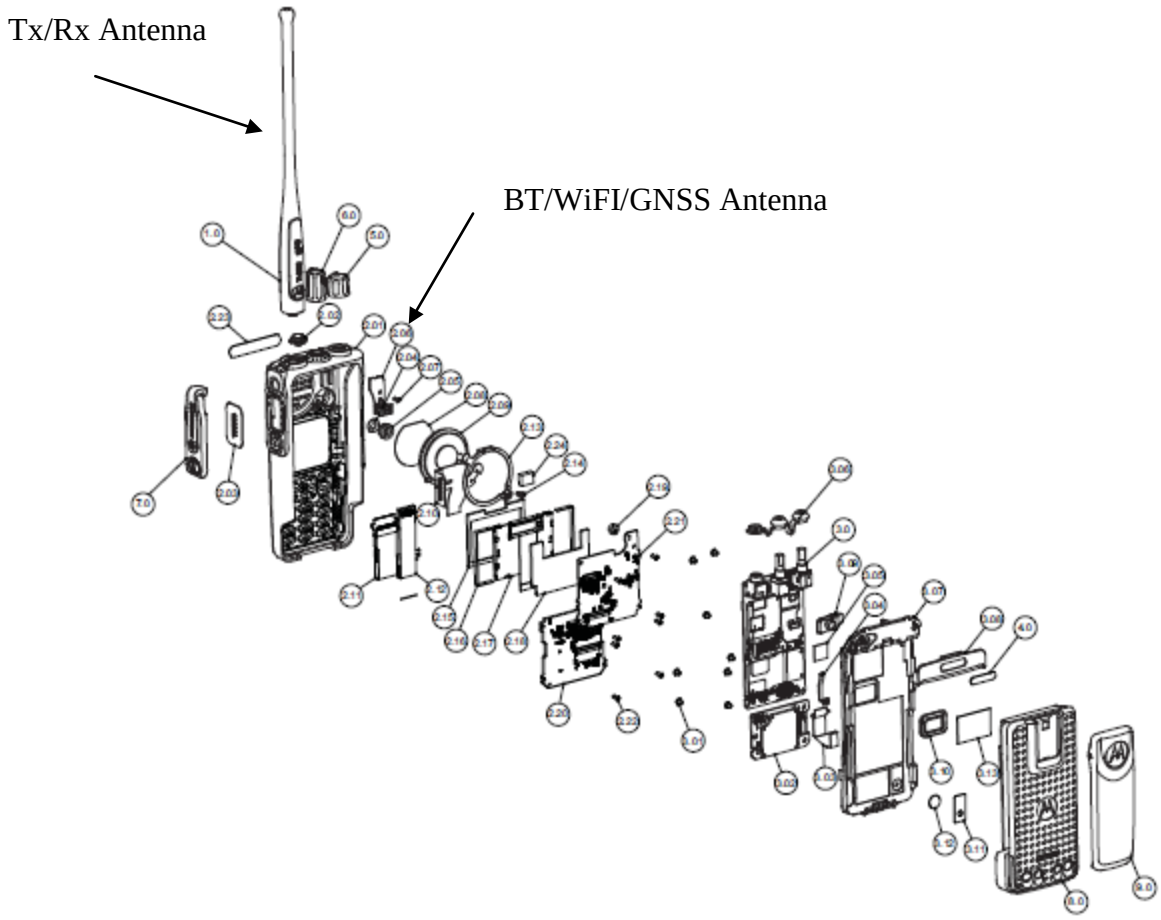

Exploded View of FKP Radio – New model

Exhibit 9O

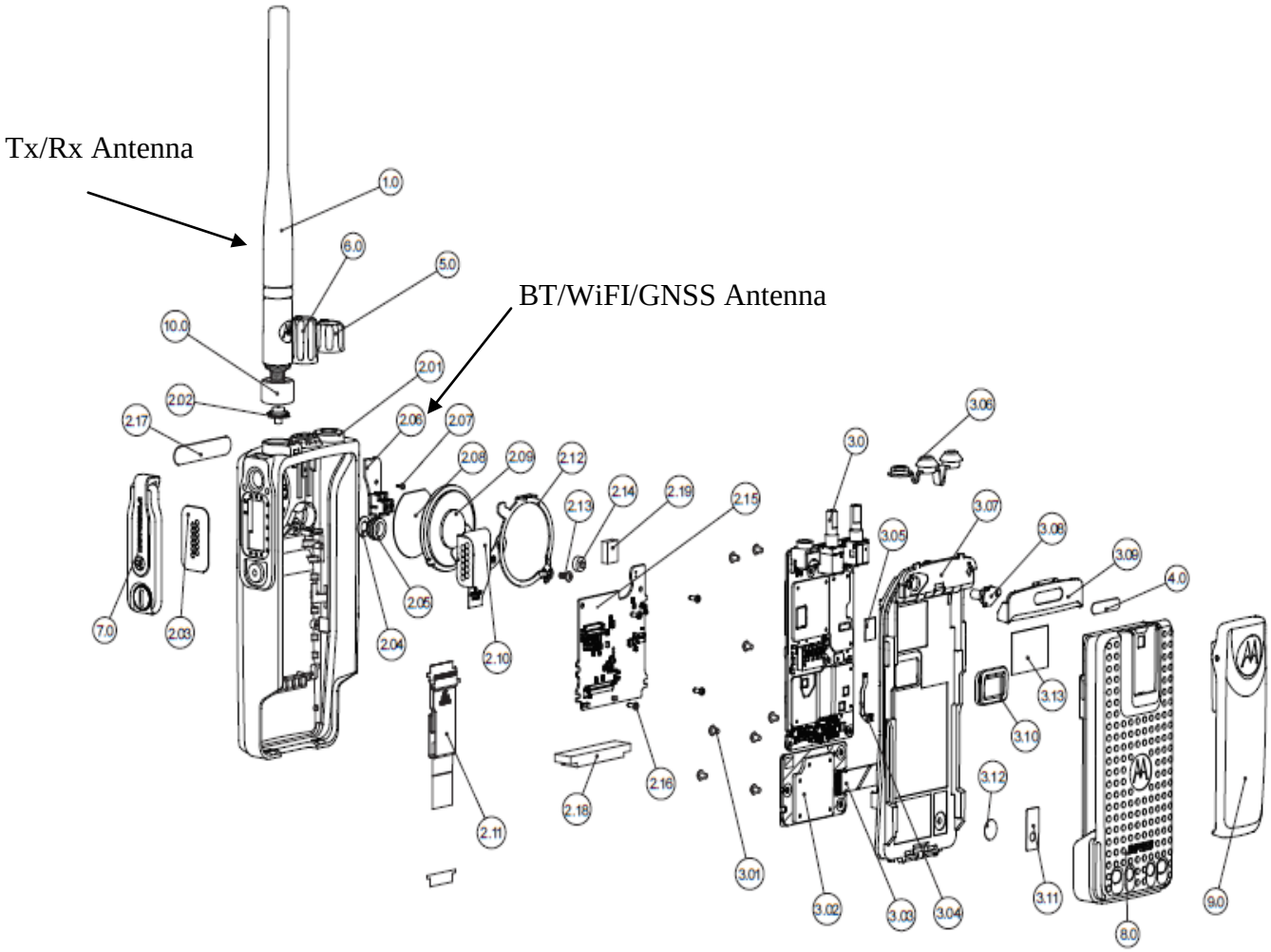

Exploded View of NKP Radio – Current model

Exhibit 9O

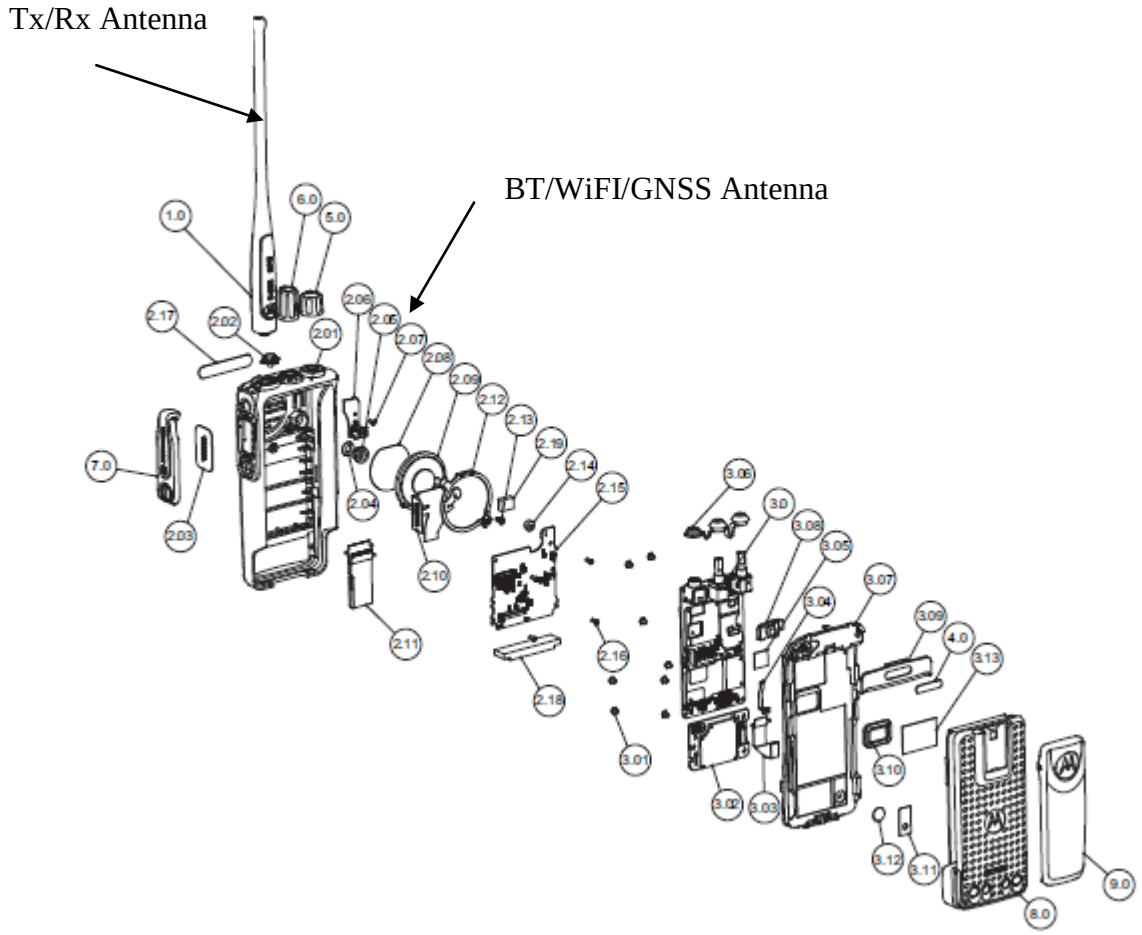

Exploded View of NKP Radio – New model