MS ISO/IEC 17025
TESTING
SAMM No. 0825

MOTOROLA PENANG ADV. COMM. LABORATORY
Motorola Solutions Malaysia Sdn Bhd
Innoplex Plot 2A, Medan Bayan Lepas,
Mukim 12 S.W.D, 11900 Bayan Lepas,
Penang, Malaysia.

FCC / ISED TEST REPORT
Report Revision : Rev.A

Date/s Tested	:	20- NOV-2017 - 24- NOV-2017
Report Issue Date	:	29-NOV-2017
Manufacturer/Location	:	Motorola Solutions Malaysia Sdn Bhd
Requestor	:	MAISARAH BINTI MAZLAN
Product Type	:	Portable
Model Number	:	AAH81QCN9TA2AN
Frequency Band	:	403 - 470MHz
Low / Max RF Output Power	:	1 Watts / 3.6 Watts
Applicant Name	:	Motorola Solutions Malaysia Sdn Bhd
Applicant Address	:	Innoplex Plot 2A, Medan Bayan Lepas, Mukim 12 S.W.D, 11900 Bayan Lepas, Penang, Malaysia
FCC Registrations	:	772092
ISED Registrations	:	109AK
FCC Test Firm Registrations	:	461337

The equipment was tested accordance to the requirement listed below:

(LMR)
FCC 47 CFR Part 90 **PASS**
ISED RSS- Gen / 119

This report shall not be reproduced without written approval from an officially designated representative of the Motorola Penang Adv. Comm. Laboratory. The results and statements contained in this report pertain only to the device(s) evaluated.

Prepared By:

Song Zhi Wei
Test Personnel

Approved By:

Vincent Foong
Responsible Engineer

Table of Contents

Report Revision History 3
1.0 General Information 4
2.0 Summary of Test Results 5
3.0 Measurement Uncertainty 5
4.0 Equipment List 6
5.0 Test Condition 8
5.1. Transmitter Test Conditions 8
6.0 Transmitter Test Parameters 9
6.1. RF Output Power 9
6.1.1. Test Setup 9
6.1.2. Test Result 9
6.2. Frequency Stability 10
6.2.1. Test Setup 10
6.2.2. Test Result 11
6.2.3. Test Limit 12
6.3. Audio Frequency Response 13
6.3.1. Test Setup 13
6.3.2. Test Result 13
6.3.3. Test Limit 13
6.4. Audio Low Pass Filter Response 14
6.4.1. Test Setup 14
6.4.2. Test Result 14
6.4.3. Test Limit 15
6.5. Modulation Limiting 16
6.5.1. Test Setup 16
6.5.2. Test Result 16
6.5.3. Test Limit 16
6.6. Occupied Bandwidth 17
6.6.1. Test Setup (Analog) 17
6.6.2. Test Result (Analog) 17
6.6.3. Test Setup (Digital) 18
6.6.4. Test Result (Digital) 19
6.6.1. Test Limit 23
6.7. Band Edge Conducted Spurious Emission (Part 22) 24
6.7.1. Test Setup (Analog) 24
6.7.2. Test Result (Analog) 24
6.7.3. Test Setup (Digital) 25
6.7.4. Test Result (Digital) 25
6.7.5. Test Limit 25
6.8. Transient Frequency Behavior 26
6.8.1. Test Setup 26
6.8.2. Test Result 27
6.8.3. Test Limit 28

6.9. Adjacent Channel Power 29
6.9.1. Test Setup (Analog) 29
6.9.2. Test Result (Analog) 29
6.9.3. Test Setup (Digital) 30
6.9.4. Test Result 30
6.9.5. Test Limit 31
6.10. Conducted Spurious Emission 33
6.10.1. Test Setup 33
6.10.2. Test Result (Analog) 33
6.10.3. Test Result (Digital) 34
6.10.4. Test Limit 40
6.11. Radiated Spurious Emission 41
6.11.1. Test Setup 41
6.11.2. Test Result (Analog) 41
6.11.3. Test Result (Digital) 42
6.11.4. Test Limit 52
6.12. Effective Radiated Power (ERP) 54
6.12.1. Test Setup 54
6.12.2. Test Result 54
6.12.3. Test Limit 54
6.13. GNSS (EIRP for 1559 - 1610MHz) 55
6.13.1. Test Setup 55
6.13.1. Test Result 55
6.13.2. Test Limit 56

Report Revision History

Revision History	Description	Date	Originator
Rev. A	Initial Report	29-NOV-2017	Song Zhi Wei

1.0 General Information

EUT Description:

Technologies	Land Mobile Radio (LMR)
Modulation Type	Analog, 4FSK

General Description of Applied Standards
The EUT is a RF Product. According to the specifications of the manufacturer, the EUT is to comply with the requirements of the following standards:

ANSI/TIA/-603-D
ANSI C63.4-2014
ANSI C63.26-2015

2.0 Summary of Test Results

FCC General Rules Part (47CFR)	ISED General Rules Part	Test Item	Result	Remark
90.210	RSS-Gen, RSS-119	RF Power Output	PASS	-
2.1055, 90.213	-	Frequency Stability	PASS	-
-	-	Audio Frequency Response	NA	-
-	-	Audio Low Pass Filter Response	NA	-
-	-	Modulation limiting	NA	-
90.210	RSS-Gen, RSS-119	Occupied Bandwidth	PASS	7K60F1D- 6.7015kHz 7K60F1E- 7.3276kHz 7K60F1W- 6.9727kHz
-	-	Band Edge Conducted Spurious Emission	NA	-
90.214	-	Transient Frequency Behavior	PASS	-
-	-	Adjacent Channel Power	NA	-
90.210	RSS-Gen, RSS-119	Conducted Spurious Emissions	PASS	Highest Spur Level -40.84dBm
90.210	RSS-Gen, RSS-119	Radiated Spurious Emission	PASS	Highest Spur Level -31.42dBm
-	-	GNSS (EIRP for 1559 – 1610MHz)	NA	-
-	-	Effective Radiated Power (ERP)	NA	-

NA → **Not Applicable**

3.0 Measurement Uncertainty

Measurement	Frequency	Expended Uncertainty (k=1.96) (±)
AC Power Line Conducted Spurious Emission	150KHz ~ 30MHz	3.43
Radiated Emissions up to 1 GHz	30MHz ~ 200MHz	5.01
	200MHz ~ 1000MHz	5.01
Radiated Emissions above 1 GHz	1GHz ~ 18GHz	5.01
	18GHz ~ 25GHz	5.01

4.0 Equipment List

FCC ANALOG ATE 1: (SW version: FCC_Frequency Stability 1.0.3 rev.)

Description	Model	Serial Number	Calibration Date	Calibration Due Date
Audio Analyzer	8903B	3011A10475	2/May/17	2/May/18
SIGNAL GENERATOR	2042	203002/745	2/May/17	2/May/18
MODULATION ANALYZER	8901B	3216A03889	3/May/17	3/May/18
TRANSCEIVER INTERFACE	8954A	2234A00398	4/May/17	4/May/18
DSA	36570A	MY42506781	3/May/17	3/May/18
SIGNAL GENERATOR	E4420B	MY41000465A	26/Mar/17	26/Mar/18
SIGNAL GENERATOR	2041	119861/041	7/Feb/17	7/Feb/18
POWER SENSOR	E4412A	MY41502652	9/May/17	9/May/18
POWER METER	E4416A	GB41293855	9/May/17	9/May/19
POWER SUPPLY	6031A	2430A00146	28/Mar/17	28/Mar/18
CHAMBER	SH-641	92014678	4/Apr/17	3/Apr/18
RF TRANSCEIVER CONTROLLER	AX2007AI	NA	CNR	CNR

FCC Transient ATE #1: (SW version: FCC Transient ATE_R1.1.1)

Description	Model	Serial Number	Calibration Date	Calibration Due Date
POWER SUPPLY	6032A	2818A03549	11-May-17	11-May-18
POWER SENSOR	E4412A	MY41498918	9-May-17	9-May-18
POWER METER	E4416A	MY45101016	11-Jan-17	11-Jan-18
ATTENUATORS/SWITCH DRIVER	11713A	2508A10141	CNR	CNR
STEP ATTENUATOR/11dB	8494G	MY52300223	9-May-17	9-May-18
STEP ATTENUATOR/110dB	8496G	MY52300176	9-May-17	9-May-18
OSCILLOSCOPE	MSO8064A	MY45001903	25-May-17	25-May-18
AUDIO ANALYZER	8903B	3729A17409	2-May-17	2-May-18
AUDIO ANALYZER	8903B	3011A08952	2-May-17	2-May-18
MODULATION ANALYZER	8901B	3019A02766	4-Mar-17	4-Mar-18
SIGNAL GENERATOR	8657A	3323A05725	2-May-17	2-May-18
SPECTRUM ANAYLYZER	E4440A	MY46185415	16/Aug/17	16/Aug/19
SWITCH CONTROL UNIT	-	-	CNR	CNR

CONDUCTED SPUR EMISSION ATE # 1 (SW version: Conducted Spur ATE_rev 1.23.01)

Description	Model	Serial Number	Calibration Date	Calibration Due Date
SWITCH CONTROL UNIT	3488A	2719A32735	CNR	CNR
SPECTRUM ANALYZER	E4440A	US45303111	16-Feb-17	16-Feb-18
POWER SUPPLY	6032A	MY41002067	5-May-17	5-May-18
HIGH PASS FILTER SWITCH BOX	-	CS001	7-Apr-17	7-Apr-18
MICROWAVE GENERATOR	SMP04	100146	18-Sept-17	18-Sept-18
MODULATION ANALYZER	8901B	3438A05278	3-Mar-17	3-Mar-18

Radiated Emission Station (SW version: 1.5.1)

DESCRIPTION	MODEL	SERIAL NUMBER	CALIBRATION DATE	CALIBRATION DUE DATE
DRG HORN FREQ.	SAS-571	719	18-Jul-17	18-Jul-19
DRG HORN FREQ.	SAS-571	720	2-Mar-17	2-Mar-19
POWER SUPPLY	6032A	2615A01178	6-Jun-17	6-Jun-18
MICROWAVE SIGNAL GENERATOR	SMP04	100127	19-Jul-17	18-Jul-18
EMI TEST RECEIVER	ESIB26	100336	13-Jul-17	12-Jul-18
SIGNAL ANALYZER	FSV40	101103	18-Jul-17	17-Jul-18
5m Semi-anechoic Chamber	S800-HX	J2308	CNR	CNR
BILOG ANTENNA	CBL6112B	2950	23-Feb-16	23-Feb-18
BILOG ANTENNA	CBL6112B	2964	3-Feb-17	3-Feb-18
BROAD-BAND HORN ANTENNA	BBHA9170	BBHA9170143	20-Mar-17	10-Apr-18
DATA LOGGER	SDL500	A.016776	18-Mar-17	18-Mar-18
LOOP ANTENNA	6502	208416	27-Jul-17	27-Jul-18
SYSTEM CONTROLLER	SC104V	050806-1	CNR	CNR
TURNTABLE FLUSH MOUNT 2M	FM2011	NA	CNR	CNR
ANTENNA POSITIONING TOWER	TLT2	NA	CNR	CNR
18 - 40GHz PREAMPLIFIER	BBV9721	9721-007	CNR	CNR
PREAMPLIFIER	PAM-0118P	361	CNR	CNR

CNR → Calibration Not Required

5.0 Test Condition

5.1. Transmitter Test Conditions

Test Item, (Channel Spacing)	Power (W)	Modulation	Test Frequency (MHz)	Tested By
RF Output Power	Low & Max	Analog	406.2000, 450.6500, 459.1250, 467.7750, 469.9875	Song Zhi Wei
Frequency Stability	Max	Analog	467.7750	NA
Audio Frequency Response (12.5kHz / 25kHz)	Max	Analog	NA	NA
Audio Low Pass Filter Response (12.5kHz / 25kHz)	Max	Analog	NA	NA
Modulation limiting (12.5kHz / 25kHz)	Max	Analog	NA	NA
Occupied Bandwidth (12.5kHz / 20kHz / 25kHz)	Max	4FSK	406.2000, 450.6500, 469.9875	Song Zhi Wei
Band Edge Conducted Spurious Emissions (Part 22) (12.5kHz / 20kHz / 25kHz)	Max	Analog	NA	NA
Transient Frequency Behavior *(UHF & VHF Band)* (12.5kHz / 25kHz)	Max	Analog	467.7750	NA
Adjacent Channel Power *(700MHz Band)* (12.5kHz / 25kHz)	Max	Analog, 4FSK	NA	NA
Conducted Spurious Emissions (12.5kHz / 20kHz / 25kHz)	Low / Max	4FSK	406.2000, 450.6500, 459.1250, 467.7750	Song Zhi Wei
Radiated Spurious Emission (12.5kHz / 25kHz)	Low / Max	4FSK	406.2000, 450.6500, 459.1250, 467.7750	Azil & Nazrin & Qawiman
GNSS (EIRP for 1559 - 1610MHz) (12.5kHz / 25kHz)	Max	Analog	NA	NA
Effective Radiated Power (ERP) (12.5kHz / 25kHz)	Max	Analog	NA	NA

NA → Not Applicable

6.0 Transmitter Test Parameters

6.1. RF Output Power

6.1.1. Test Setup

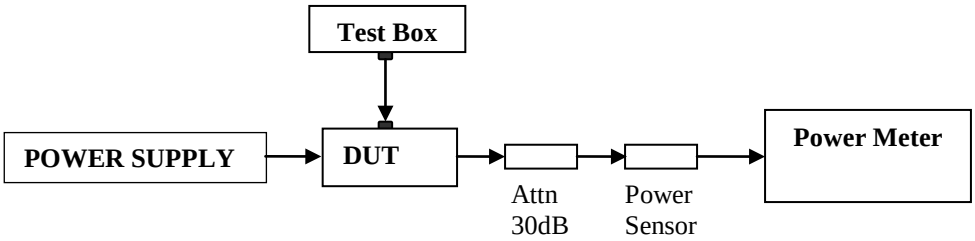

1) The DUT transmitter connected to Power Meter using the 30 dB attenuator and power sensor with above setup.
2) Path loss for the measurement included.
3) All the measurement was done at low, mid, high frequency for each band.
4) Record the power into the test report.

6.1.2. Test Result

Temperature	25˚C				
Voltage (V)	3.7V				
Frequency (MHz)	Low Power (W)	Current (A)	Max Power (W)	Current (A)	Remarks
406.2000	0.98	1.15	3.46	2.15	
450.6500	1.05	1.09	3.58	2.29	
459.1250	1.08	1.08	3.57	2.27	
467.7750	1.05	1.13	3.54	2.28	
469.9875	1.06	1.08	3.58	2.26	

6.2. Frequency Stability

6.2.1. Test Setup

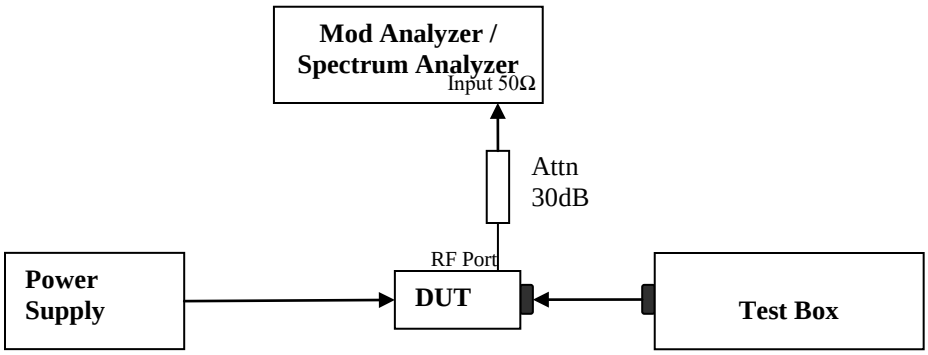

1) The DUT transmitter output port was connected to Modulation / Spectrum Analyzer.
2) Path loss for the measurement included.
3) Transmit the DUT and record the freq in MCF_{MHz}.
4) Test in 2 conditions:
   - Temperature: The frequency of the transmitter was measured from -30°C to 50°C.
   - Supply Voltage:
     -Mobile: The frequency of the transmitter was measured from 85% to 115% of the nominal operating input voltage.
     -Portable: The frequency of the transmitter was measured from nominal ± x % as specified by the manufacturer

5) Calculate the ppm frequency error by the following:

$$ppm\ error = \left(\frac{MCF_{MHz}}{ACF_{MHz}} - 1\right) * 10^6$$

Where: MCF_{MHz} is the Measured Carrier Frequency in MHz
ACF_{MHz} is the Assigned Carrier Frequency in MHz

6.2.2. Test Result

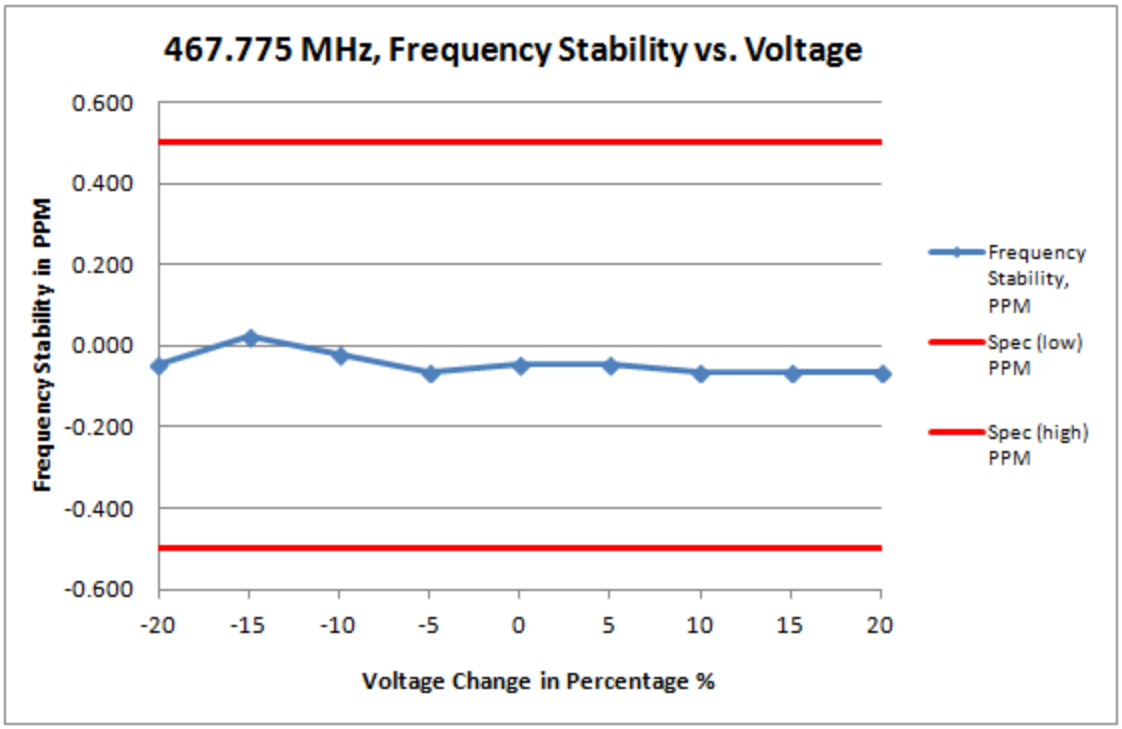

(i) Frequency Stability VS Voltage

Frequency / Channel Spacing	467.775 MHz / 12.50 kHz				
Temperature, ^{0}C	25				
Voltage %	Voltage, V	Frequency, MHz	Frequency Stability, PPM	Spec (low) PPM	Spec (high) PPM
-20	2.96	467.77498	-0.043	-0.500	0.500
-15	3.14	467.77501	0.021	-0.500	0.500
-10	3.33	467.77499	-0.021	-0.500	0.500
-5	3.52	467.77497	-0.064	-0.500	0.500
0	3.70	467.77498	-0.043	-0.500	0.500
5	3.88	467.77498	-0.043	-0.500	0.500
10	4.07	467.77497	-0.064	-0.500	0.500
15	4.26	467.77497	-0.064	-0.500	0.500
20	4.44	467.77497	-0.064	-0.500	0.500

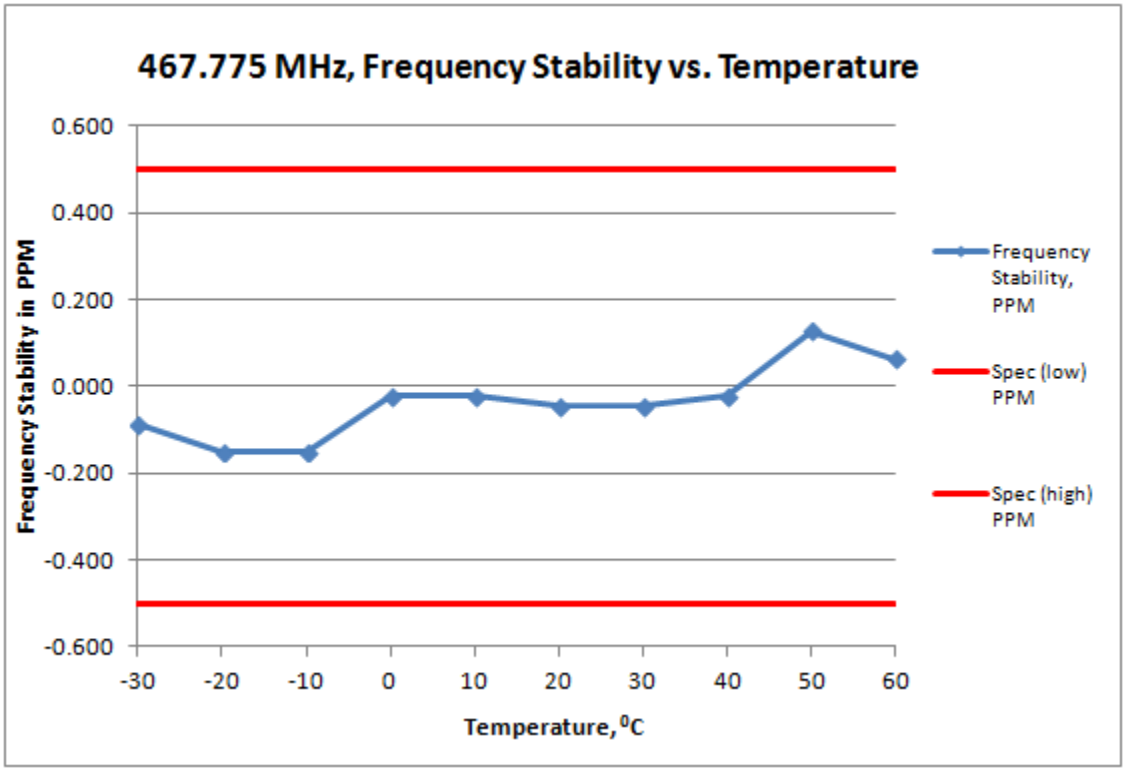

(ii) Frequency Stability VS temperature

Frequency / Channel Spacing	467.775 MHz / 12.50 kHz			
Voltage, V	3.7			
Temperature, ⁰C	Frequency, MHz	Frequency Stability, PPM	Spec (low) PPM	Spec (high) PPM
-30	467.774960	-0.086	-0.500	0.500
-20	467.774930	-0.150	-0.500	0.500
-10	467.774930	-0.150	-0.500	0.500
0	467.774990	-0.021	-0.500	0.500
10	467.774990	-0.021	-0.500	0.500
20	467.774980	-0.043	-0.500	0.500
30	467.774980	-0.043	-0.500	0.500
40	467.774990	-0.021	-0.500	0.500
50	467.775060	0.128	-0.500	0.500
60	467.775030	0.064	-0.500	0.500

6.2.3. Test Limit

As per manufacturer declared spec +/- 0.5ppm

6.3. Audio Frequency Response

6.3.1. Test Setup

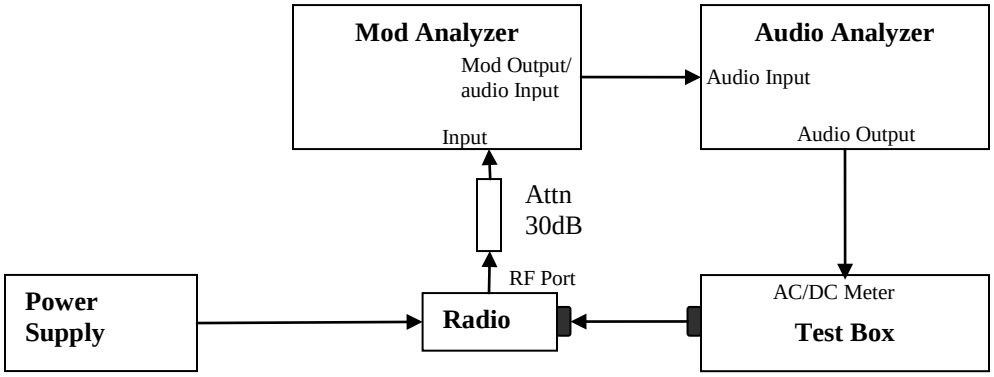

1) The DUT transmitter output port was connected to Modulation Analyzer.
2) Path loss for the measurement included.
3) Set the audio bandwidth filter to 15 kHz and 50 kHz.
4) Transmit the radio and set the audio analyzer to 1 kHz audio frequency and 20% of the Full rated system deviation.
5) On audio analyzer, set the rated level as reference to zero.
6) Vary the audio frequency from 300 Hz to 3 kHz. Record the change in dB on the audio analyzer.

6.3.2. Test Result

NA → Not Applicable

6.3.3. Test Limit

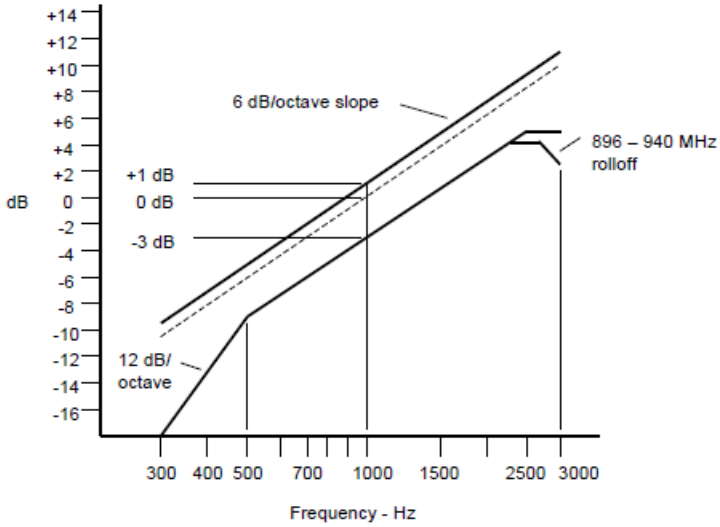

Note:

- *There are additional 6 dB per octave attenuation is allowed from 2.5KHz to 3KHz in equipment 25MHz to 869MHz radio.*
- *Additional 6 dB per octave attenuation is allowed from 2.3KHz to 2.7KHz & additional 12 dB per octave attenuation is allowed from 2.7KHz to 3KHz in equipment 896MHz to 940MHz radio.*

6.4. Audio Low Pass Filter Response

6.4.1. Test Setup

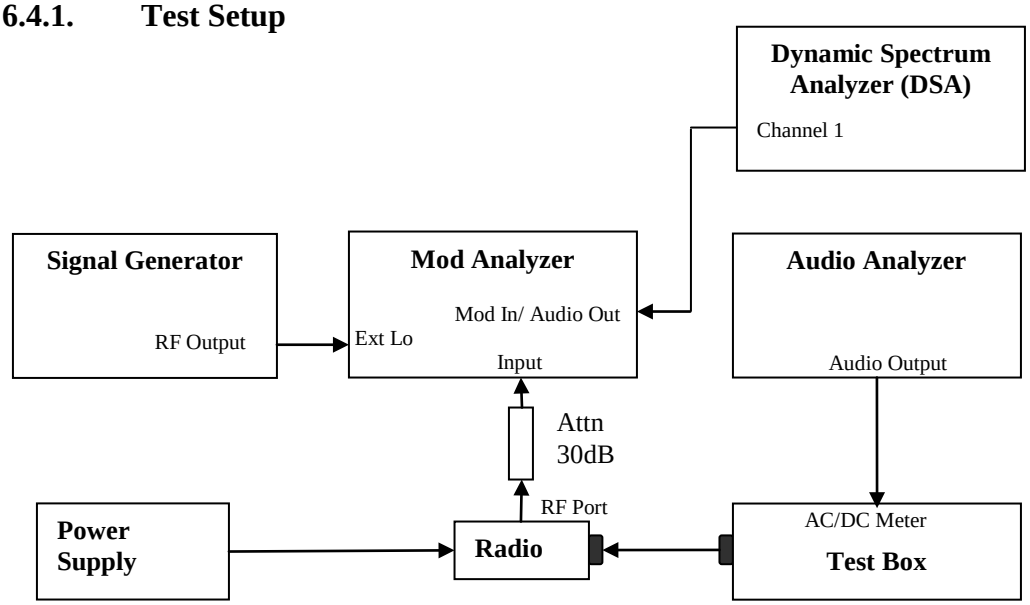

1) The DUT transmitter output port was connected to Modulation Analyzer.
2) Path loss for the measurement included.
3) Press 23.1SPCL on modulation analyzer to enable the external LO from Sigen.
4) Set the Sigen frequency to Fc + 1.5 MHz, RF output level to 0dBm without modulation.
5) Transmit the radio and set the audio analyzer to 1 kHz audio frequency and 60% of the Full rated system deviation.
6) Up the amplitude by 20dB.
7) On DSA, get the reference point to 0dB.
8) Vary the frequency on audio analyzer from 3 kHz to 20 kHz, record the audio tone from DSA

6.4.2. Test Result

NA → Not Applicable

6.4.3. Test Limit

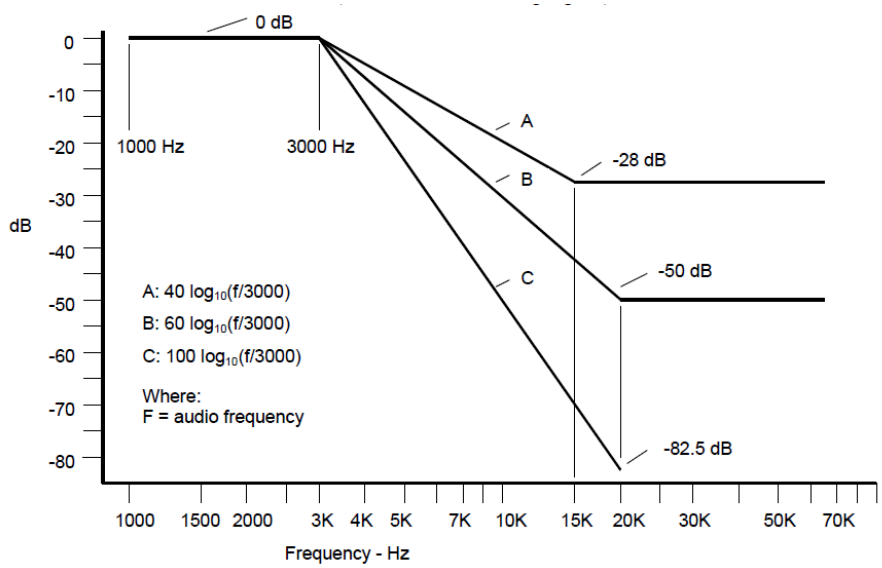

For audio frequencies above 3000 Hz, the audio response of the post limiter low-pass filter shall meet or exceed the following requirements:

a) For equipment operating on 20, 25 or 30 kHz channel bandwidth in the 25 MHz to 174 MHz range:

At frequencies from 3000 Hz through 15,000 Hz the attenuation shall be greater than the attenuation at 1000 Hz by at least: 40 $\log_{10}(f / 3000)$ dB

where: f is the audio frequency in Hz.

At frequencies above 15,000 Hz, the attenuation shall be greater than the attenuation at 1000 Hz, by at least: 28 dB.

b) For equipment operating with 25 kHz bandwidth channels between 406 and 512 MHz through 896 MHz, and between 929 MHz through 930 MHz:

At frequencies from 3000 Hz through 20,000 Hz, the attenuation shall be greater than the attenuation at 1000 Hz by at least: 60 $\log_{10}(f / 3000)$ dB

where: f is the audio frequency in Hz.

At frequencies above 20,000 Hz the attenuation shall be greater than the attenuation at 1000 Hz by at least: 50 dB.

c) For equipment operating on channels between 896 MHz through 901 MHz, between 935 MHz through 940 MHz, and 12.5 or 15 kHz spaced channels in the frequency range 138-174 MHz and 406-512 MHz.

At frequencies from 3000 Hz through 20,000 Hz the attenuation shall be greater than the attenuation at 1000 Hz by at least: 100 $\log_{10}(f / 3000)$ dB

where: f is the audio frequency in Hz.

6.5. Modulation Limiting

6.5.1. Test Setup

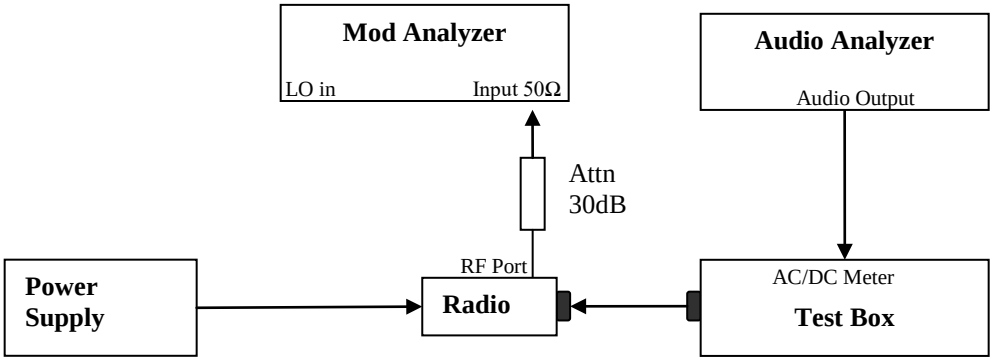

1) The DUT transmitter output port was connected to Modulation Analyzer.
2) Path loss for the measurement included.
3) Set the audio bandwidth filter to 15 kHz.
4) Transmit the radio and set the audio analyzer to 1 kHz audio frequency and 60% of the Full rated system deviation.
5) Record the frequency deviation as 0dB input level at 1kHz audio frequency.
6) Repeat the step and record the frequency deviation from -20 dB to 20dB by 5 dB increments and different audio freq 300 Hz, 2.5 kHz and 3 kHz.

6.5.2. Test Result

NA → Not Applicable

6.5.3. Test Limit

Modulation Limiting shall not exceed 100 percent.

6.6. Occupied Bandwidth

6.6.1. Test Setup (Analog)

A. Get Fc for reference

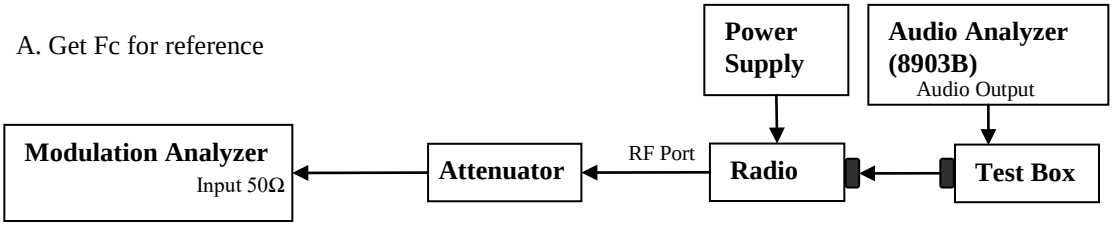

B. Testing

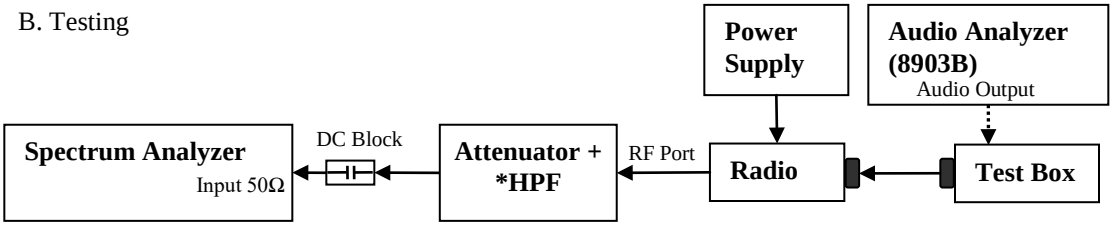

1) The DUT transmitter output port was connected to Modulation Analyzer.
2) Set the audio bandwidth filter to 15 kHz low pass filter and 50 kHz high pass filter.
3) Transmit the radio and set the audio analyzer to 2.5 kHz audio frequency and 50% of the rated deviation. Up the amplitude by 16 dB. Dekey the DUT.
4) Path loss for the measurement included.
5) Select the Occupied Bandwidth measurement for 99% Emissions Bandwidth Measurement.
6) Key in the Fc and Resolution Bandwidth (1 ~ 5 % of emission designator).
7) Transmit the DUT and record the occupied Bandwidth frequency.
8) Preset the spectrum analyzer for sideband spectrum measurement.
9) Set the span and Resolution Bandwidth (according to FCC/ ISED standard).
10) Save the screen shot as modulated signal
11) Remove the audio tone from audio analyzer to capture unmodulated signal.

* Only HPF added for Mask 80.211 measurement with attenuator.

6.6.2. Test Result (Analog)

NA → Not Applicable

6.6.3. Test Setup (Digital)

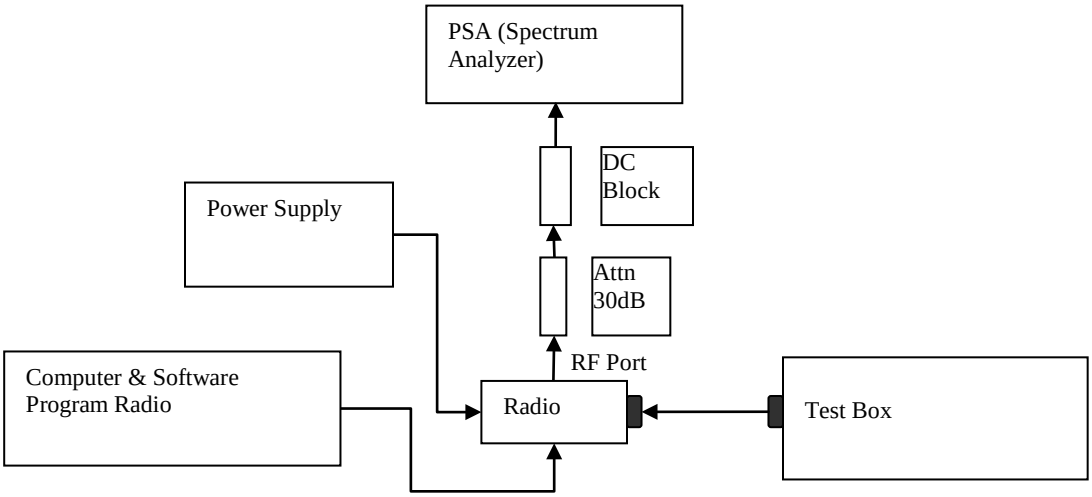

1) Program and set radio to operate in desire test frequency and digital mode with modulation. (*4FSK, C4FM or other digital modulation form).
2) Path loss for the measurement included.
3) Select the Occupied Bandwidth measurement for 99% Emissions Bandwidth Measurement.
4) Key in the Fc and Resolution Bandwidth (1 ~ 5 % of emission designator).
5) Transmit the DUT and record the occupied Bandwidth frequency.
6) Preset the spectrum analyzer for modulation emission spectrum measurement.
7) Set the span and Resolution Bandwidth (according to FCC/ ISED standard).
8) Capture the screen shot as modulated signal.

*Note:

- For Digital Modulation, 12.5 kHz Data F1D & FXD would be the same. Therefore only measurements with F1D modulation shown below.
- For Digital Modulation, 12.5 kHz Data F1E & FXE would be the same. Therefore only measurements with F1E modulation shown below.

6.6.4. Test Result (Digital)

Modulation		Rules Part		
4FSK Data		FCC Part 90 / RSS 119		
Channel Frequency (MHz)	**Channel Spacing (kHz)**		**99% OCB (kHz)**	**Emission Designator**
406.2000	12.5		7.5135	7K60F1D

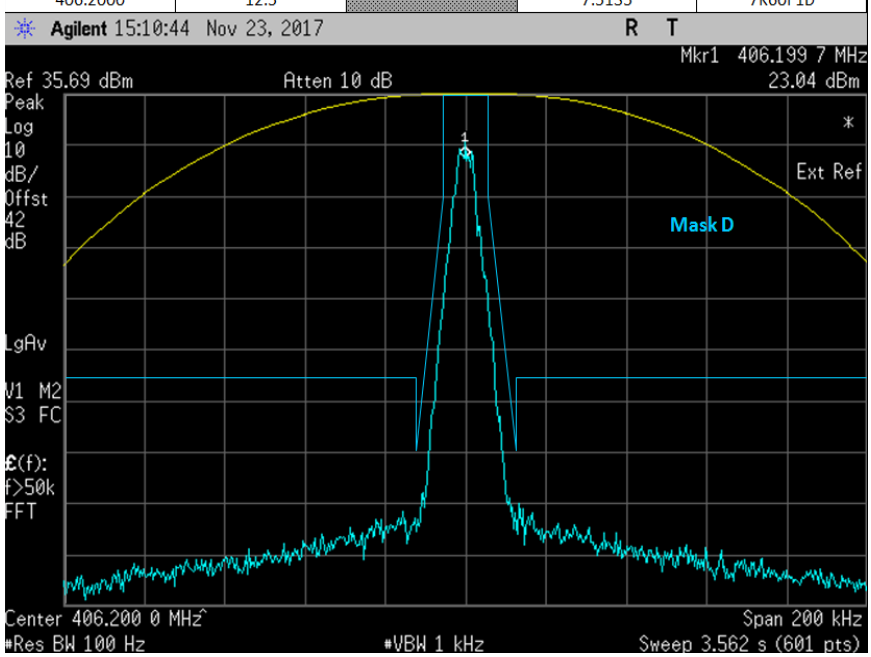

Modulation		Rules Part		
4FSK Data		FCC Part 90 / RSS 119		
Channel Frequency (MHz)	**Channel Spacing (kHz)**		**99% OCB (kHz)**	**Emission Designator**
450.6500	12.5		6.4680	7K60F1D

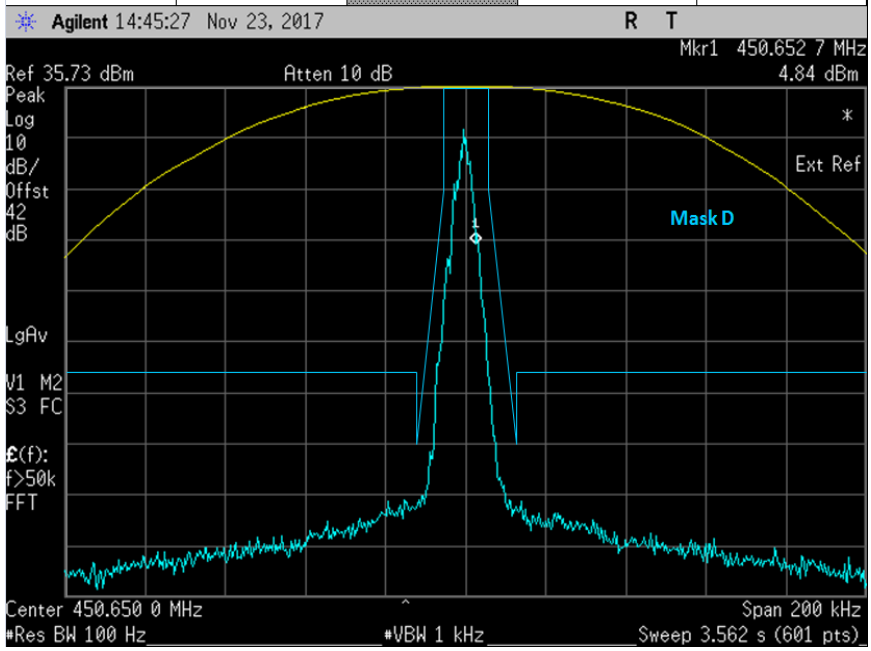

Modulation			Rules Part	
4FSK Data			FCC Part 90 / RSS 119	
Channel Frequency (MHz)	**Channel Spacing (kHz)**		**99% OCB (kHz)**	**Emission Designator**
469.9875	12.5		6.5172	7K60F1D

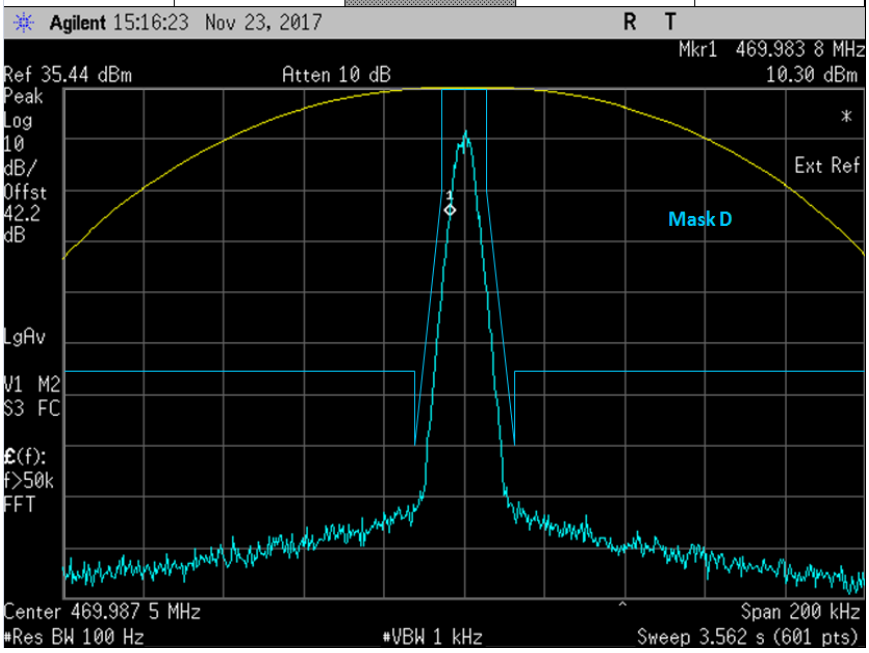

Modulation			Rules Part	
4FSK Voice			FCC Part 90 / RSS 119	
Channel Frequency (MHz)	**Channel Spacing (kHz)**		**99% OCB (kHz)**	**Emission Designator**
406.2000	12.5		6.9812	7K60F1E

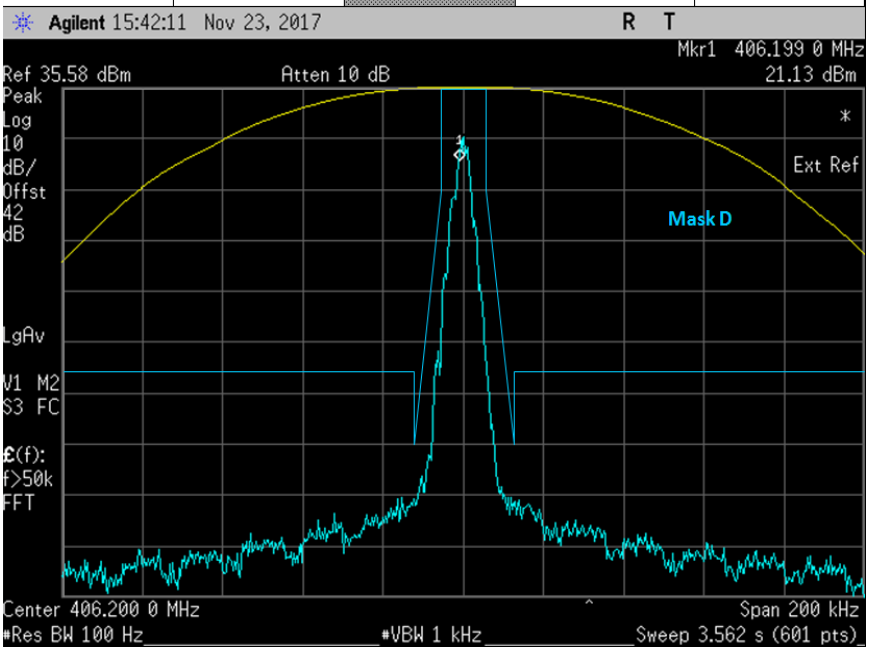

Modulation		Rules Part		
4FSK Voice		FCC Part 90 / RSS 119		
Channel Frequency (MHz)	Channel Spacing (kHz)		99% OCB (kHz)	Emission Designator
450.6500	12.5		6.4025	7K60F1E

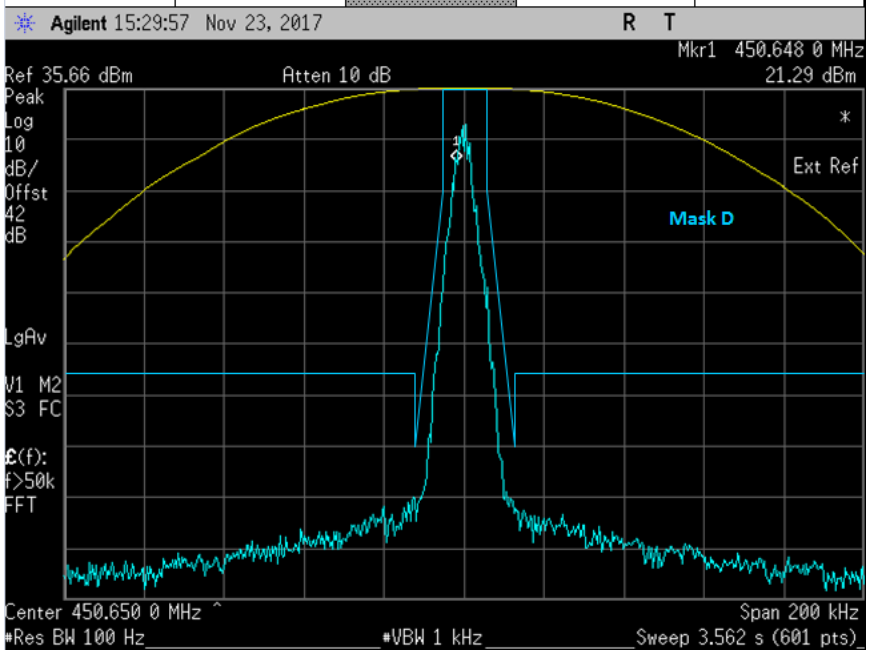

Modulation		Rules Part		
4FSK Voice		FCC Part 90 / RSS 119		
Channel Frequency (MHz)	Channel Spacing (kHz)		99% OCB (kHz)	Emission Designator
469.9875	12.5		6.3186	7K60F1E

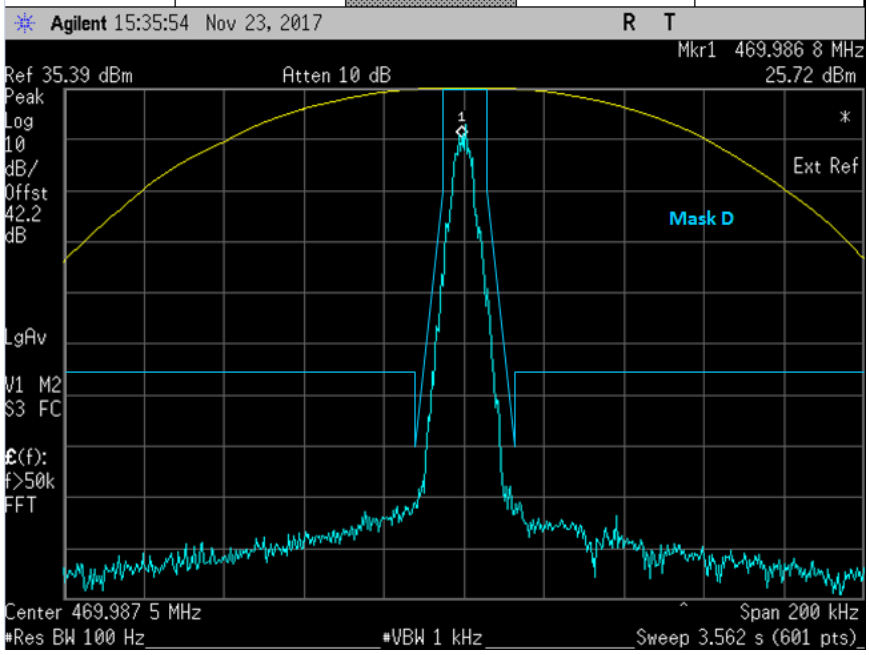

Modulation		Rules Part		
4FSK Data+Voice		FCC Part 90 / RSS 119		
Channel Frequency (MHz)	Channel Spacing (kHz)		99% OCB (kHz)	Emission Designator
406.2000	12.5		6.5637	7K60F1W

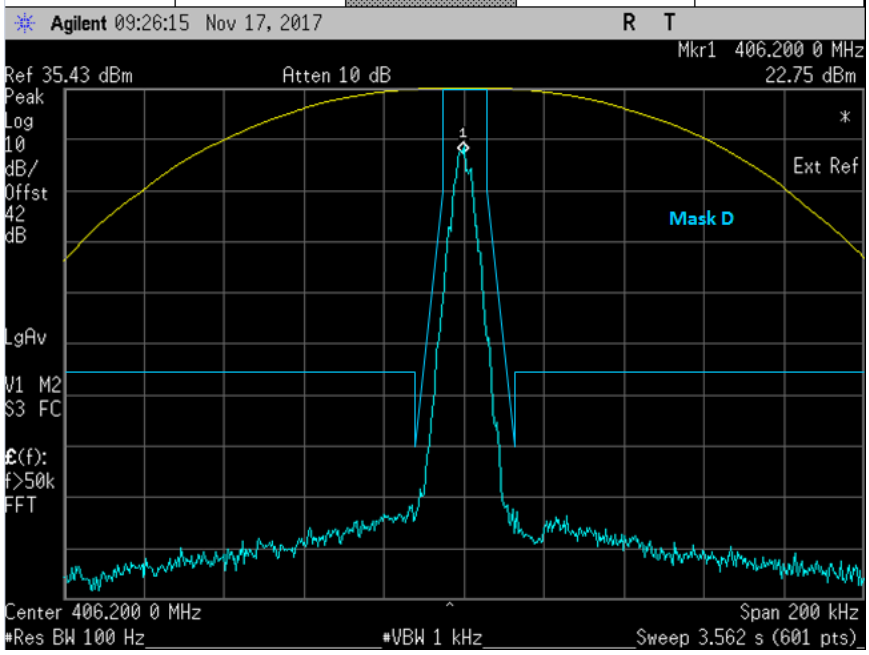

Modulation		Rules Part		
4FSK Data+Voice		FCC Part 90 / RSS 119		
Channel Frequency (MHz)	Channel Spacing (kHz)		99% OCB (kHz)	Emission Designator
450.6500	12.5		6.9727	7K60F1W

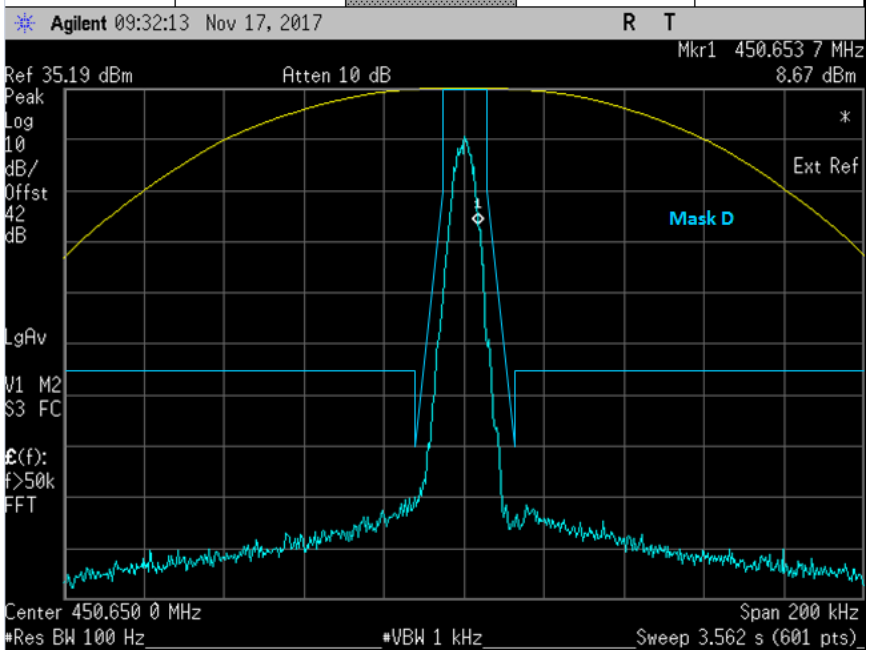

Modulation			Rules Part	
4FSK Data+Voice			FCC Part 90 / RSS 119	
Channel Frequency (MHz)	**Channel Spacing (kHz)**		**99% OCB (kHz)**	**Emission Designator**
469.9875	12.5		6.5172	7K60F1D

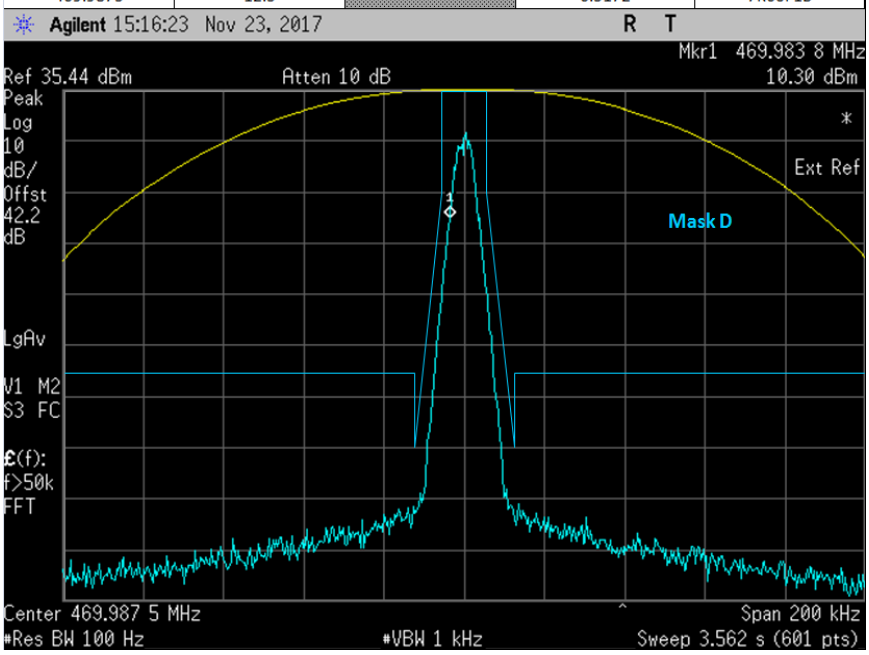

6.6.1. Test Limit

The 99% occupied bandwidth is the width of a frequency band such that, below the lower and above the upper frequency limits, the mean powers emitted are each equal to a specified percentage 0.5% of the total mean transmitted power.

6.7. Band Edge Conducted Spurious Emission (Part 22)

6.7.1. Test Setup (Analog)

A. Get Fc for reference

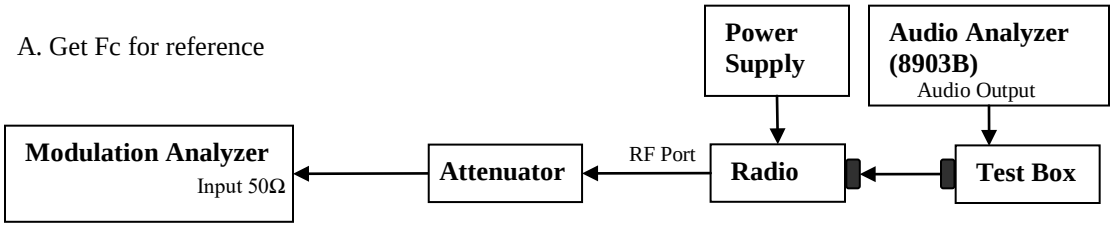

B. Testing

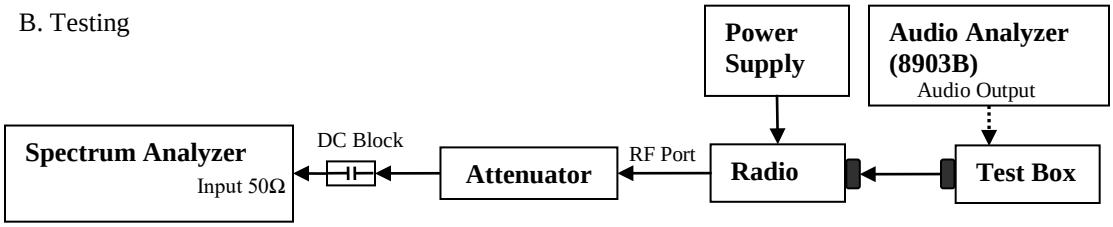

1) The DUT transmitter output port was connected to Modulation Analyzer.
2) Set the audio bandwidth filter to 15 kHz low pass filter and 50 kHz high pass filter.
3) Transmit the radio and set the audio analyzer to 2.5 kHz audio frequency and 50% of the rated deviation. Up the amplitude by 16 dB. Dekey the DUT.
4) Path loss for the measurement included.
5) Select the Occupied Bandwidth measurement for 99% and 26dB Emissions Bandwidth Measurement.
6) Key in the Fc and Resolution Bandwidth.
7) Transmit the DUT and record the occupied Bandwidth frequencies.
8) Preset the spectrum analyzer for band edge measurement.
9) The band edges of lowest and highest channels were measured.
10) Key in the Lowest and highest channel frequency, span is 60 kHz and Resolution Bandwidth is at least 1% of Emission Bandwidth.
11) Save the screen shot as modulated signal.
12) Remove the audio tone from audio analyzer to capture unmodulated signal.

*Note:

- For emission designator ending with F3E, 16K0F3E is the worst case and therefore only 16K0F3E will be shown.

6.7.2. Test Result (Analog)

NA → Not Applicable

6.7.3. Test Setup (Digital)

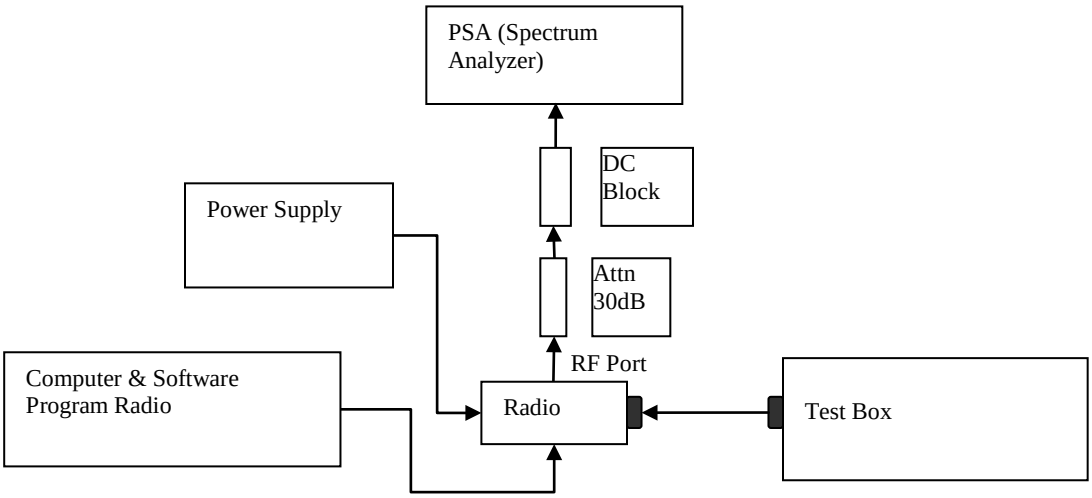

1) Program and set radio to operate in desire test frequency and digital mode with modulation. (*4FSK, C4FM or other digital modulation form).
2) Path loss for the measurement included.
3) Select the Occupied Bandwidth measurement for 99% and 26dB Emissions Bandwidth Measurement.
4) Key in the Fc and Resolution Bandwidth.
5) Transmit radio record the occupied Bandwidth frequencies.
6) Preset the spectrum analyzer for band edge measurement.
7) Key in the lowest and highest channels frequency, span is 60 kHz and Resolution Bandwidth is at least 1% of Emission Bandwidth.
8) Save the screen shot.

*Note:

- For Digital Modulation, 12.5 kHz Data F1D & FXD would be the same. Therefore only measurements with F1D modulation shown below.
- For Digital Modulation, 12.5 kHz Data F1E & FXE would be the same. Therefore only measurements with F1E modulation shown below.

6.7.4. Test Result (Digital)

NA → Not Applicable

6.7.5. Test Limit

The power of any emission outside of the authorized operating frequency ranges must be attenuated below the transmitting power (P) by a factor of at least 43 + 10 log(P) dB.

6.8. Transient Frequency Behavior

6.8.1. Test Setup

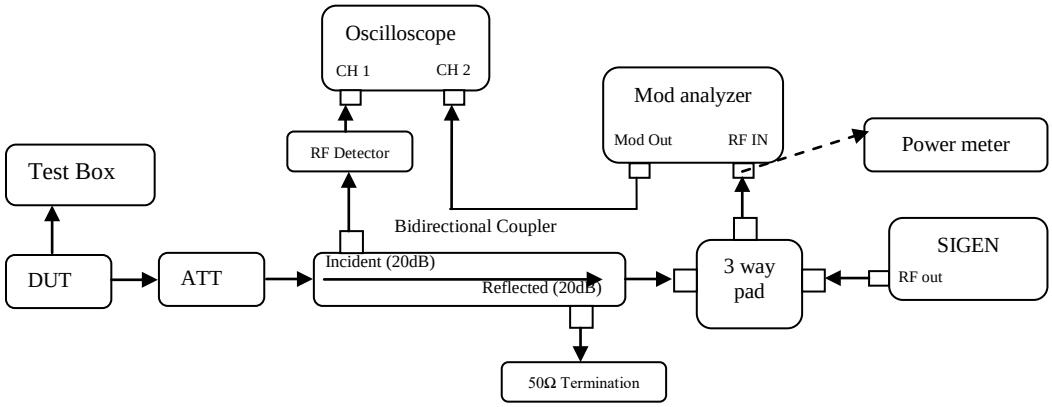

1) Connect the setup as figure above.
2) Path loss for the measurement included.
3) Set on Sigen with the assigned center frequency, internal 1 kHz FM tone.
   FM Deviation: Analog 25kHz Channel Spacing = 25 kHz
   Analog 12.5 kHz Channel Spacing = 12.5 kHz
   C4FM = 12.5 kHz
4) Turn on 50 kHz high pass filter and 15 kHz low pass filter on modulation analyzer.
5) Supply sufficient attenuation ATT to provide the output power of ≤ -11dBm into power meter when DUT is keying up.
6) Note the power level on power meter and dekey the DUT.
7) Adjust the amplitude of the signal generator to the level power meter, maintained the amplitude throughout the rest of the measurement.
8) Connect the output to modulation analyzer.
9) Reduce 30dB attenuation and transmit the radio to get the trigger line.
10) Capture the screen shot for key-up (rising edge) and de-key (falling edge) mode.

6.8.2. Test Result

Analog: 467.7750 MHz, 12.5 kHz Channel Spacing, Max Power

Switch On Condition t_{on}, t_1 and t_2

Channel Frequency (MHz)	Channel Spacing (kHz)	Mode
467.7750	12.5	Analog

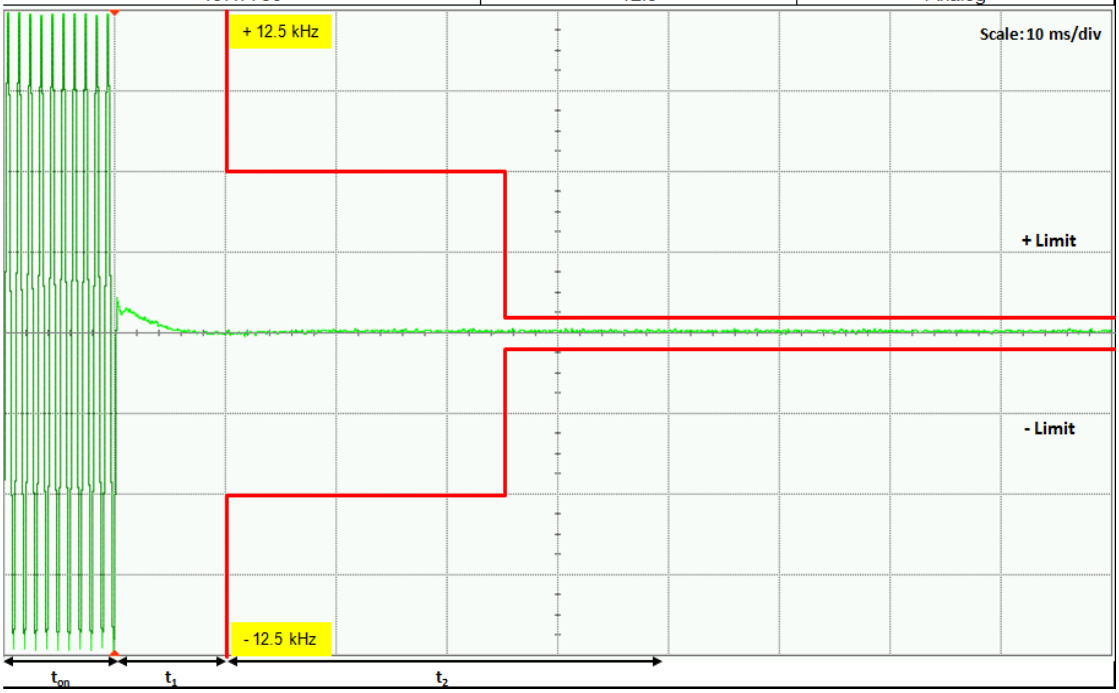

Switch Off Condition t_3 t_{off}

Channel Frequency (MHz)	Channel Spacing (kHz)	Mode
467.7750	12.5	Analog

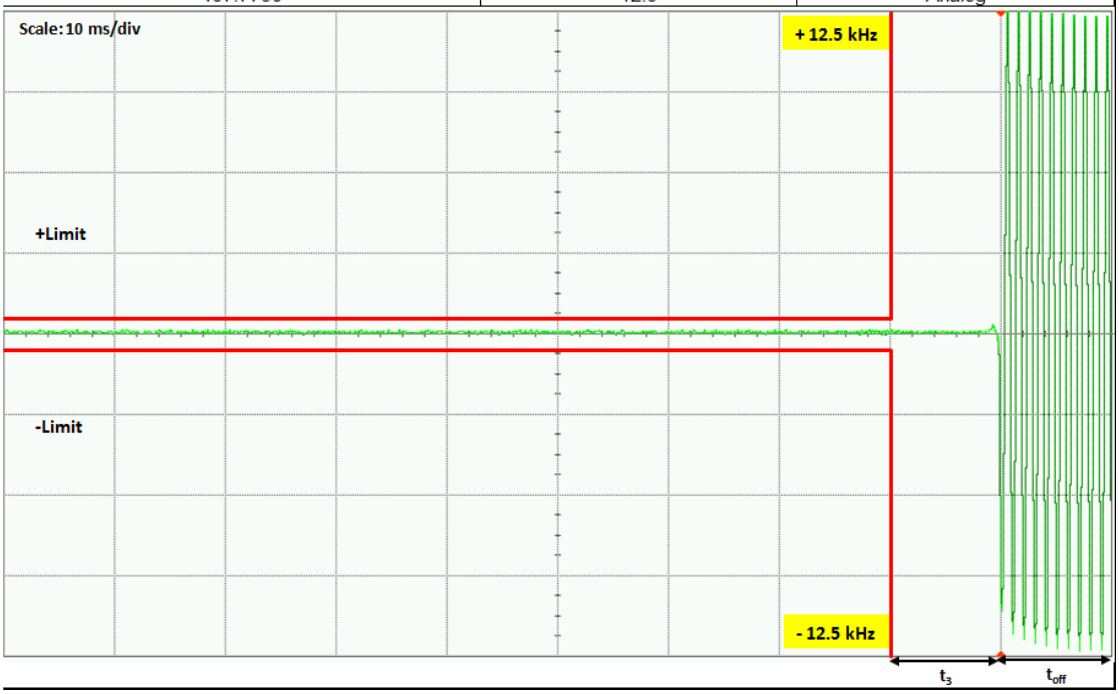

6.8.3. Test Limit

Transmitters designed to operate in the 150-174 MHz and 421-512 MHz frequency bands must maintain transient frequencies within the maximum frequency difference limits during the time intervals indicated:

Time intervals[1 2]	**Maximum frequency difference[3]**	**All equipment**	
		150 to 174 MHz	**421 to 512 MHz**
Transient Frequency Behavior for Equipment Designed to Operate on 25 kHz Channels			
t_1[4]	±25.0 kHz	5.0 ms	10.0 ms
t_2	±12.5 kHz	20.0 ms	25.0 ms
t_3[4]	±25.0 kHz	5.0 ms	10.0 ms
Transient Frequency Behavior for Equipment Designed to Operate on 12.5 kHz Channels			
t_1[4]	±12.5 kHz	5.0 ms	10.0 ms
t_2	±6.25 kHz	20.0 ms	25.0 ms
t_3[4]	±12.5 kHz	5.0 ms	10.0 ms
Transient Frequency Behavior for Equipment Designed to Operate on 6.25 kHz Channels			
t_1[4]	±6.25 kHz	5.0 ms	10.0 ms
t_2	±3.125 kHz	20.0 ms	25.0 ms
t_3[4]	±6.25 kHz	5.0 ms	10.0 ms

[1] t_{on} is the instant when a 1 kHz test signal is completely suppressed, including any capture time due to phasing.
t_1 is the time period immediately following t_{on}.
t_2 is the time period immediately following t_1.
t_3 is the time period from the instant when the transmitter is turned off until t_{off}.
t_{off} is the instant when the 1 kHz test signal starts to rise.
[2] During the time from the end of t_2 to the beginning of t_3, the frequency difference must not exceed the limits specified in §90.213.
[3] Difference between the actual transmitter frequency and the assigned transmitter frequency.
[4] If the transmitter carrier output power rating is 6 watts or less, the frequency difference during this time period may exceed the maximum frequency difference for this time period.

6.9. Adjacent Channel Power

6.9.1. Test Setup (Analog)

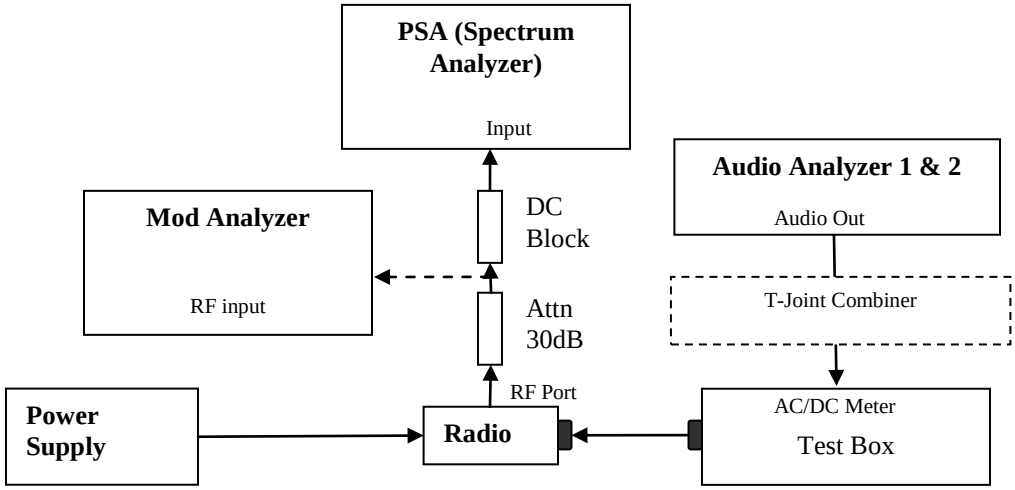

1) The DUT transmitter output port was connected to modulation analyzer.
2) Transmit the radio and turn on 1st audio analyzer with audio frequency 650Hz, 50% rated deviation, and record the amplitude value as AmpT1.
3) Turn off Audio analyzer 1 and turn on audio analyzer 2, set the audio frequency to 2.2 kHz and 50% deviation. Record the amplitude as AmpT2.
4) Turn both audio analyzers ON and up 10dB amplitude level.
5) Connect the output to PSA and set to assigned center frequency.
6) Set Span, Resolution Bandwidth and Video Bandwidth per rules part.
7) Transmit the radio and record the Adjacent Channel Power value in dBc.

6.9.2. Test Result (Analog)

Not Applicable

6.9.3. Test Setup (Digital)

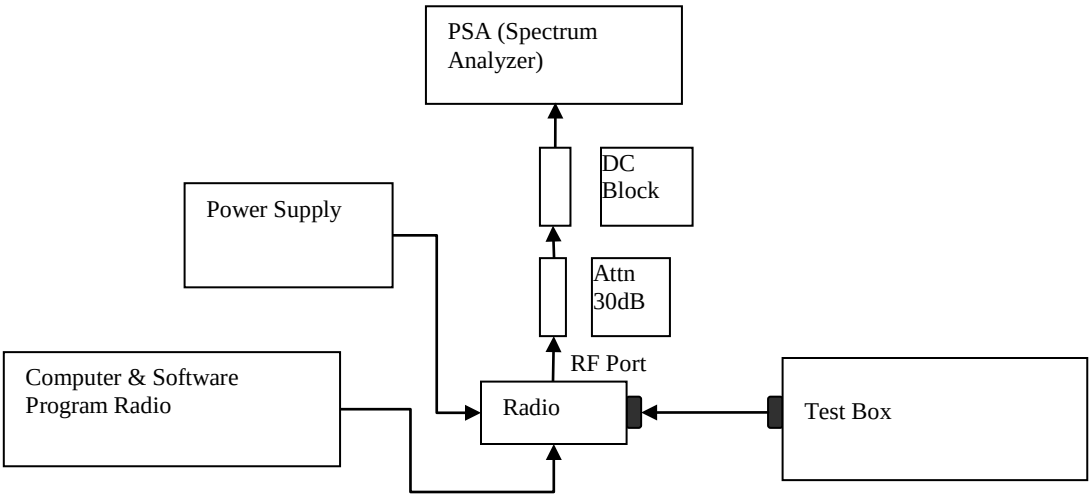

1) Program and set radio to operate in desire test frequency and digital mode with modulation. (4FSK, C4FM or other digital modulation form).
2) Prepare setup as per picture.
3) Turn on the ACP Measurement – Press Measure, ACP.
4) Set Span, Resolution Bandwidth and Video Bandwidth as per rules part.
5) Transmit the radio and record the Adjacent Channel Power value in dBc.

6.9.4. Test Result

Not Applicable

6.9.5. Test Limit

12.5 kHz Mobile Transmitter ACP Requirements

Offset from center frequency (kHz)	Measurement bandwidth (kHz)	Maximum ACP relative (dBc)
9.375	6.25	−40
15.625	6.25	−60
21.875	6.25	−60
37.50	25.00	−60
62.50	25.00	−65
87.50	25.00	−65
150.00	100	−65
250.00	100	−65
350.00	100	−65
>400 to 12 MHz	30 (s)	−75
12 MHz to paired receive band	30 (s)	−75
In the paired receive band	30 (s)	−100

25 kHz Mobile Transmitter ACP Requirements

Offset from center frequency (kHz)	Measurement bandwidth (kHz)	Maximum ACP relative (dBc)
15.625	6.25	−40
21.875	6.25	−60
37.50	25	−60
62.50	25	−65
87.50	25	−65
150.00	100	−65
250.00	100	−65
350.00	100	−65
>400 kHz to 12 MHz	30 (s)	−75
12 MHz to paired receive band	30 (s)	−75
In the paired receive band	30 (s)	−100

12.5 kHz Base Transmitter ACP Requirements

Offset from center frequency (kHz)	Measurement bandwidth (kHz)	Maximum ACP (dBc)
9.375	6.25	−40
15.625	6.25	−60
21.875	6.25	−60
37.5	25	−60
62.5	25	−65
87.5	25	−65
150	100	−65
250	100	−65
350.00	100	−65
>400 kHz to 12 MHz	30 (s)	−80
12 MHz to paired receive band	30 (s)	−80
In the paired receive band	30 (s)	[1]-85

25 kHz Base Transmitter ACP Requirements

Offset from center frequency (kHz)	Measurement bandwidth (kHz)	Maximum ACP (dBc)
15.625	6.25	−40
21.875	6.25	−60
37.5	25	−60
62.5	25	−65
87.5	25	−65
150	100	−65
250	100	−65
350	100.00	−65
>400 kHz to 12 MHz	30 (s)	−80
12 MHz to paired receive band	30 (s)	−80
In the paired receive band	30 (s)	[1]-85

6.10. Conducted Spurious Emission

6.10.1. Test Setup

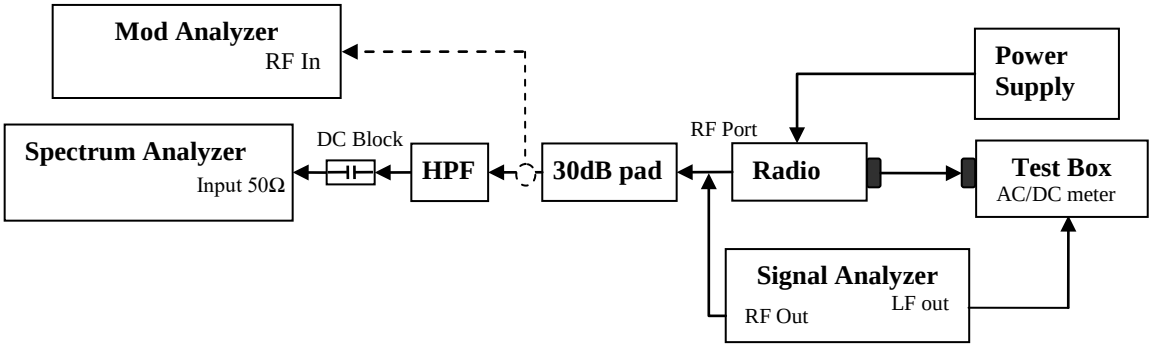

1) The DUT transmitter output port was connected to Modulation Analyzer or Spectrum Analyzer with above setup.
2) For analog measurement, turn off the High Pass Filter path and turn on 15 kHz low pass filter on modulation analyzer. Set Sigen to LF out ON with the assigned center frequency. Key up the DUT to get the 50% of rated deviation at mod analyzer and up amplitude 16dB with internal 2.5 kHz FM tone.
3) For Digital Measurement, Program and set radio to operate in desire test frequency and digital mode with modulation. (4FSK, C4FM or other digital modulation form).
4) Path loss for the measurement included.
5) Set the spectrum Resolution Bandwidth as per rules part.
6) Adjust the center frequency of the spectrum analyzer for incremental coverage of the range from:
    a. 9 KHz to Fc – Test Bandwidth
    b. Fc + Test Bandwidth to 2Fc – 5MHz.
7) Key up the DUT, record all the frequencies and levels of spurious emissions from step 5) and dekey the DUT.
8) Turn On HPF path and Key up the DUT.
9) Adjust the PSA Freq for coverage of range from 2Fc to 10Fc, record the spur and harmonics level in dBm.
10) Whichever Spur level in step 7) & step 9) is within 20dB from the test limit, replace the DUT with the Sigen and adjust the signal level to reproduce the frequencies & levels. Record the signal generator levels in dBm.

6.10.2. Test Result (Analog)

NA → Not Applicable

6.10.3. Test Result (Digital)

<u>Digital:</u> 406.2000 MHz, 12.5 kHz Channel Spacing, Max Power
<u>FCC Part 90 and RSS 119</u>

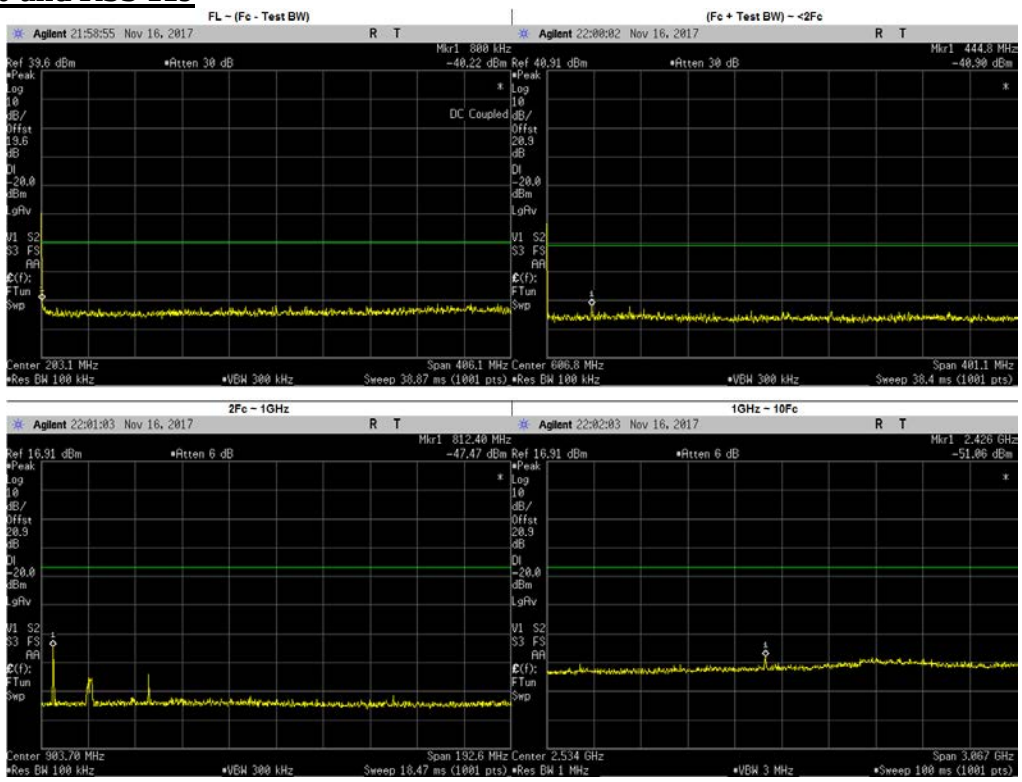

Frequency Range	Highest Spur Frequency (MHz)	Spurious Level (dBm)	Failing Limit (dBm)	Results
FL ~ (Fc - Test BW)	394.3665	-41.50	-20	PASS
(Fc + Test BW) ~ <2Fc	444.7655	-40.90	-20	PASS
2Fc ~ 1GHz	851.5054	-56.97	-20	PASS
	826.8526	-58.53	-20	PASS
	827.2378	-58.61	-20	PASS
	828.2008	-58.64	-20	PASS
	812.4000	-47.76	-20	PASS
1GHz ~ 10Fc	2426.1550	-51.06	-20	PASS
	1218.6000	-54.24	-20	PASS
	1624.8000	-56.00	-20	PASS
	2031.0000	-55.91	-20	PASS
	2437.2000	-54.98	-20	PASS
	2843.4000	-54.04	-20	PASS
	3249.6000	-52.61	-20	PASS
	3655.8000	-53.95	-20	PASS
	4062.0000	-53.56	-20	PASS

<u>Digital:</u> 450.6500 MHz, 12.5 kHz Channel Spacing, Max Power
<u>FCC Part 90 and RSS 119</u>

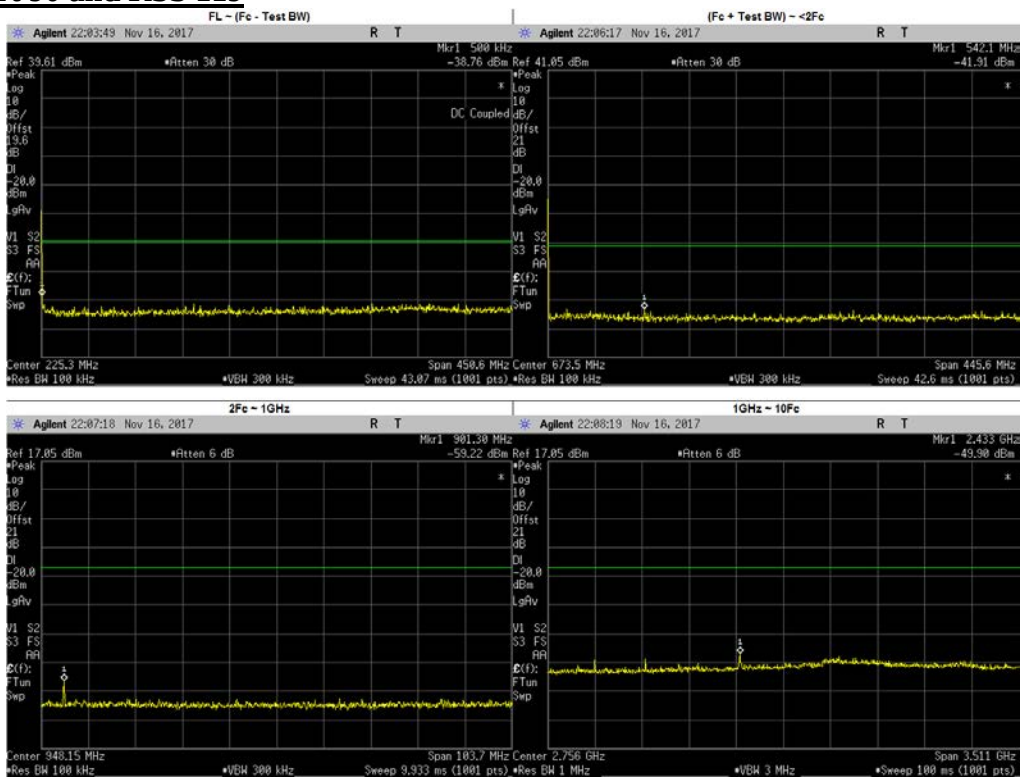

Frequency Range	Highest Spur Frequency (MHz)	Spurious Level (MHz)	Failing Limit (dBm)	Results
FL ~ (Fc - Test BW)	371.2904	-41.56	-20	PASS
(Fc + Test BW) ~ <2Fc	542.0534	-41.91	-20	PASS
2Fc ~ 1GHz	901.3000	-59.39	-20	PASS
1GHz ~ 10Fc	2432.6920	-49.90	-20	PASS
	1351.9500	-53.08	-20	PASS
	1802.6000	-55.76	-20	PASS
	2253.2500	-55.47	-20	PASS
	2703.9000	-54.58	-20	PASS
	3154.5500	-51.84	-20	PASS
	3605.2000	-53.58	-20	PASS
	4055.8500	-54.01	-20	PASS
	4506.5000	-54.71	-20	PASS

<u>Digital:</u> 450.6500 MHz, 12.5 kHz Channel Spacing, Low Power
<u>FCC Part 90 and RSS 119</u>

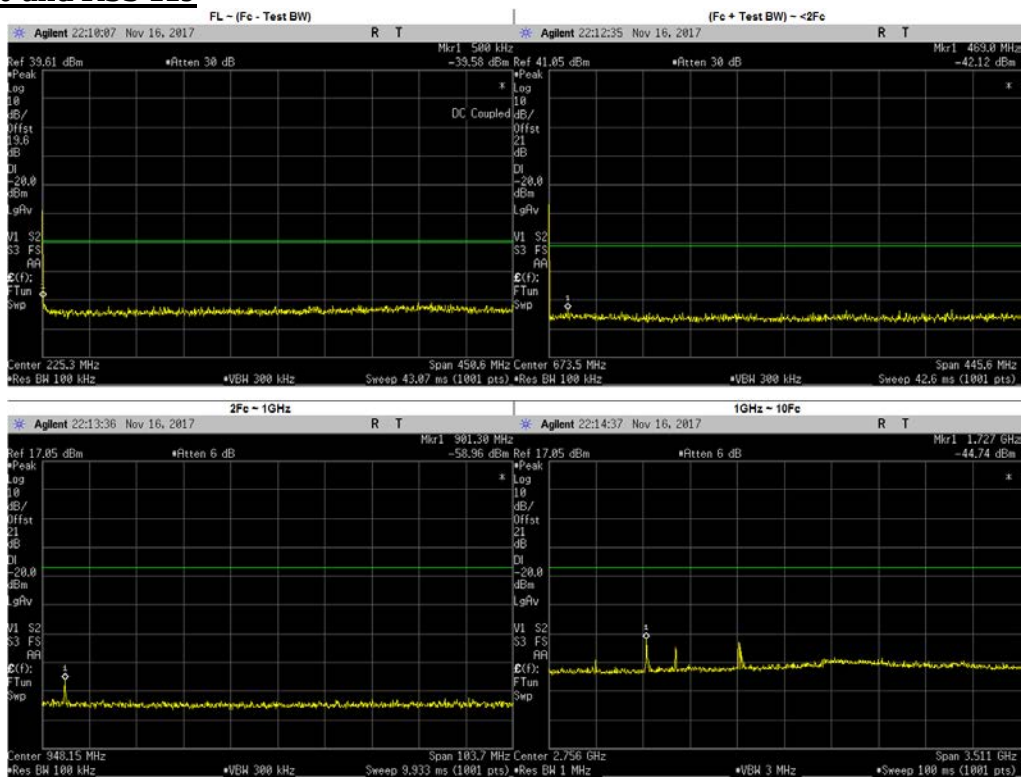

Frequency Range	Highest Spur Frequency (MHz)	Spurious Level (MHz)	Failing Limit (dBm)	Results
FL ~ (Fc - Test BW)	359.5752	-41.23	-20	PASS
(Fc + Test BW) ~ <2Fc	468.9761	-42.12	-20	PASS
2Fc ~ 1GHz	901.3000	-58.96	-20	PASS
1GHz ~ 10Fc	1726.8800	-44.74	-20	PASS
	2418.6460	-45.80	-20	PASS
	1944.5930	-47.57	-20	PASS
	2429.1800	-47.75	-20	PASS
	1351.9500	-53.13	-20	PASS
	1802.6000	-56.06	-20	PASS
	2253.2500	-55.37	-20	PASS
	2703.9000	-55.52	-20	PASS
	3154.5500	-51.93	-20	PASS
	3605.2000	-54.04	-20	PASS
	4055.8500	-53.62	-20	PASS
	4506.5000	-55.21	-20	PASS

<u>Digital:</u> 459.1250 MHz, 12.5 kHz Channel Spacing, Max Power
<u>FCC Part 90</u>

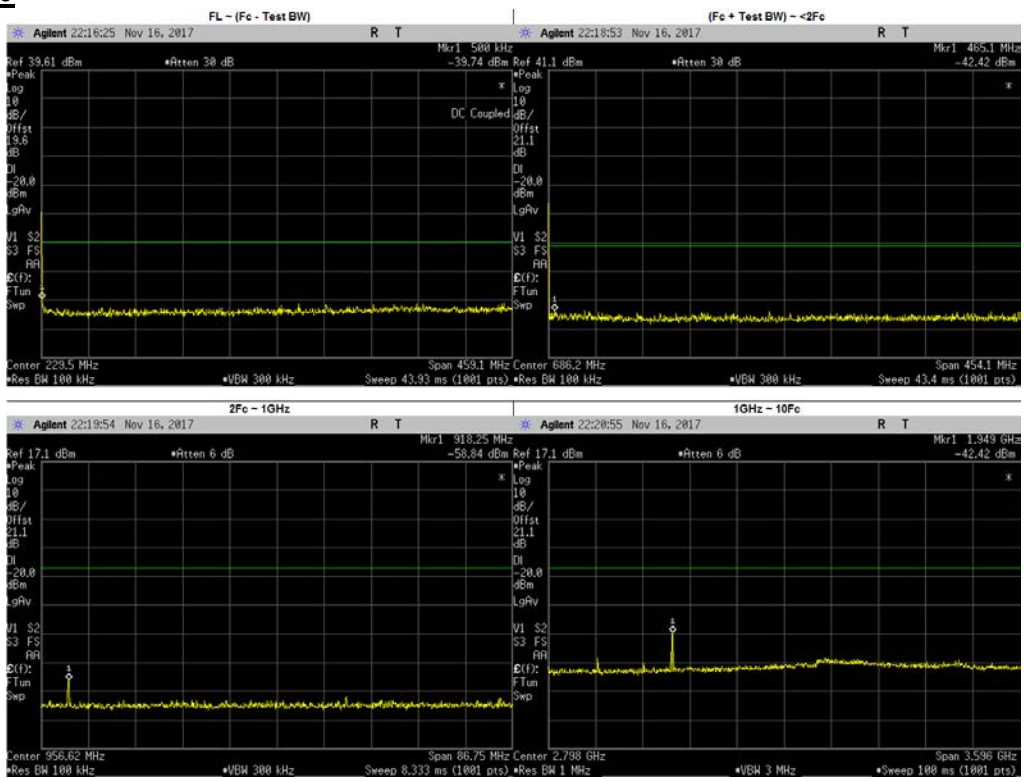

Frequency Range	Highest Spur Frequency (MHz)	Spurious Level (MHz)	Failing Limit (dBm)	Results
FL ~ (Fc - Test BW)	450.3461	-41.45	-20	PASS
(Fc + Test BW) ~ <2Fc	465.0847	-42.42	-20	PASS
2Fc ~ 1GHz	918.2500	-58.84	-20	PASS
1GHz ~ 10Fc	1949.4100	-42.42	-20	PASS
	1377.3750	-51.62	-20	PASS
	1836.5000	-55.98	-20	PASS
	2295.6250	-54.93	-20	PASS
	2754.7500	-54.93	-20	PASS
	3213.8750	-52.64	-20	PASS
	3673.0000	-54.26	-20	PASS
	4132.1250	-51.92	-20	PASS
	4591.2500	-55.06	-20	PASS

<u>Digital:</u> 467.7750 MHz, 12.5 kHz Channel Spacing, Max Power
<u>FCC Part 90 and RSS 119</u>

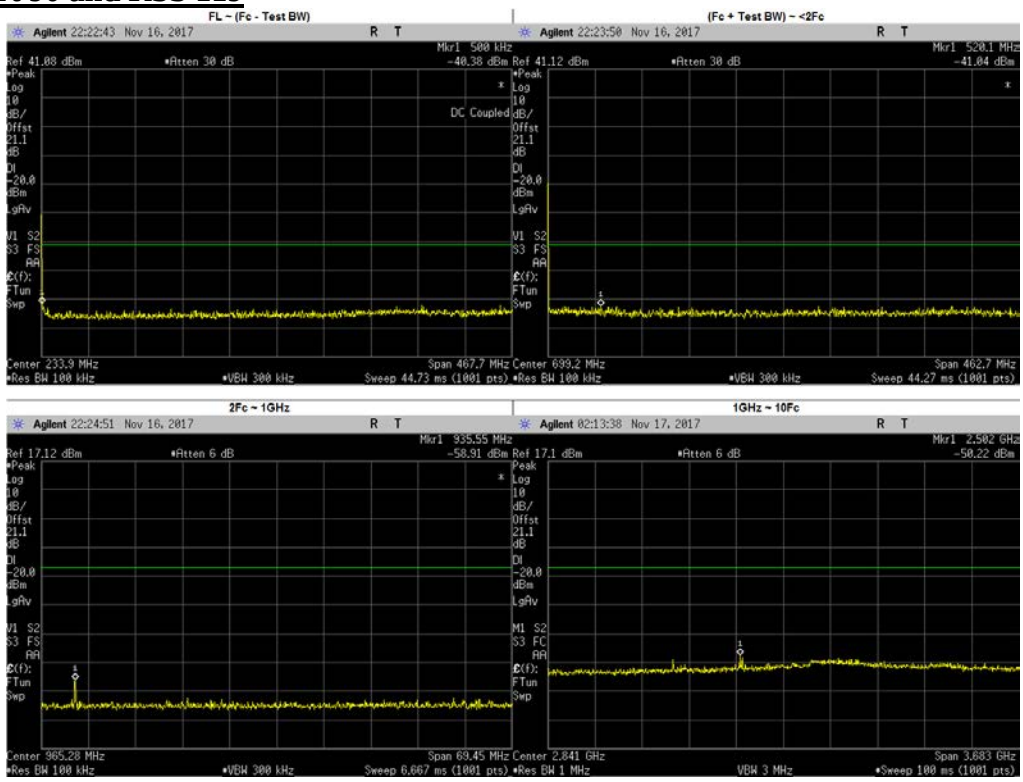

Frequency Range	Highest Spur Frequency (MHz)	Spurious Level (MHz)	Failing Limit (dBm)	Results
FL ~ (Fc - Test BW)	377.9180	-40.84	-20	PASS
(Fc + Test BW) ~ <2Fc	520.1190	-41.05	-20	PASS
2Fc ~ 1GHz	935.5500	-58.92	-20	PASS
1GHz ~ 10Fc	2502.0000	-48.88	-20	PASS
	1403.3250	-56.47	-20	PASS
	1871.1000	-55.42	-20	PASS
	2338.8750	-55.34	-20	PASS
	2806.6500	-54.34	-20	PASS
	3274.4250	-52.88	-20	PASS
	3742.2000	-54.07	-20	PASS
	4209.9750	-53.22	-20	PASS
	4677.7500	-53.43	-20	PASS

<u>Digital:</u> 467.7750 MHz, 12.5 kHz Channel Spacing, Low Power
<u>FCC Part 90 and RSS 119</u>

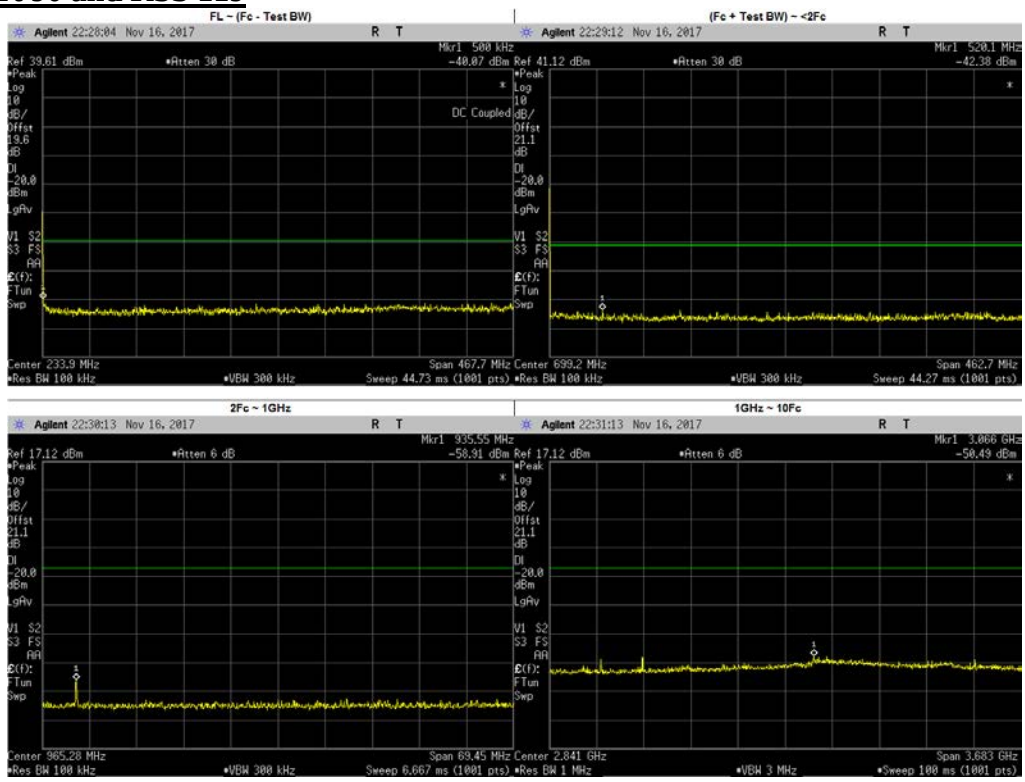

Frequency Range	Highest Spur Frequency (MHz)	Spurious Level (MHz)	Failing Limit (dBm)	Results
FL ~ (Fc - Test BW)	464.4442	-41.50	-20	PASS
(Fc + Test BW) ~ <2Fc	520.1190	-42.38	-20	PASS
2Fc ~ 1GHz	935.5500	-58.91	-20	PASS
1GHz ~ 10Fc	3066.0000	-50.49	-20	PASS
	1403.3250	-51.53	-20	PASS
	1871.1000	-55.91	-20	PASS
	2338.8750	-55.27	-20	PASS
	2806.6500	-53.99	-20	PASS
	3274.4250	-52.49	-20	PASS
	3742.2000	-53.63	-20	PASS
	4209.9750	-54.55	-20	PASS
	4677.7500	-55.40	-20	PASS

6.10.4. Test Limit

The power of any emission outside a licensee's frequency block shall be attenuated below the transmitter power (P) by at least:

Channel Spacing	Part 22	Part 24D	Part 74	Part 80	Part 90 (UHF, VHF, 800, 900)	Part 90 (700)
12.5kHz	43 + log10(P) (-13 dBm)	43 + log10(P) (-13 dBm)	43 + log10(P) (-13 dBm)	Not Applicable	50 + log10(P) (-20 dBm)	43 + log10(P) (-13 dBm)
25kHz		Not Applicable		43 + log10(P) (-13 dBm)	43 + log10(P) (-13 dBm)	43 + log10(P) (-13 dBm)

6.11. Radiated Spurious Emission

6.11.1. Test Setup

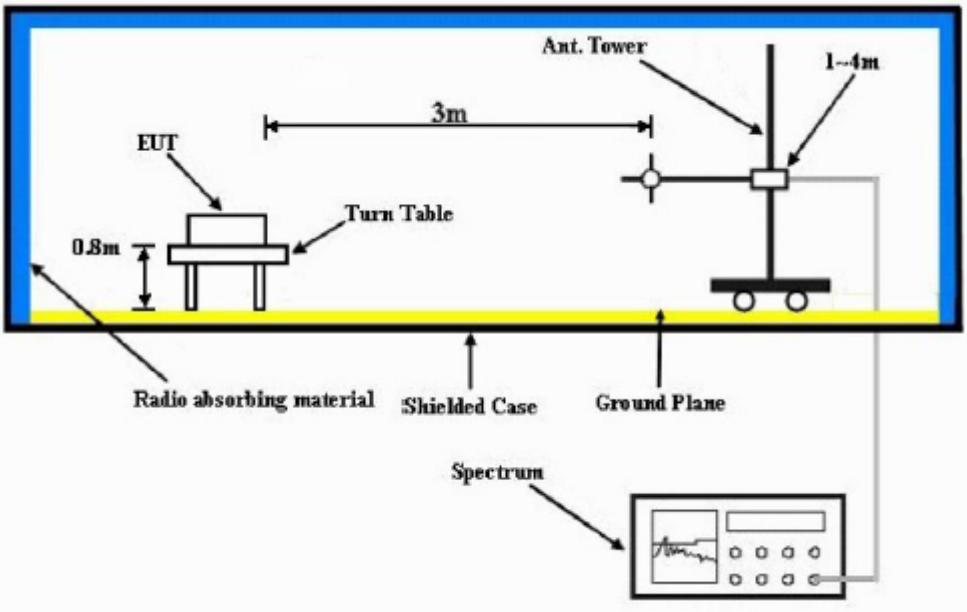

1) The Resolution Bandwidth for scanning Radiated Emission below 1 GHz is 100 kHz with Video Bandwidth = 300 kHz and Resolution Bandwidth for above 1 GHz is 1 MHz with Video Bandwidth = 3 MHz. Detector mode is positive peak.
2) In the semi- anechoic chamber, setup as illustrated above the DUT placed on the 0.8m height of Turn Table, rotated the table around 360 degrees to search the maximum radiation power and receiver antenna shall be rotated vertical and horizontal polarization and moved height from 1m to 4m to find the maximum polar radiated power. The "Read Value" is the spectrum reading the maximum power value.
3) The substitution antenna is substituted for DUT at the same position and signals generator (S.G) export the CW signal to the substitution antenna via a TX cable. The receiver antenna shall be rotated vertical and horizontal polarization and moved height from 1m to 4m to find the maximum radiation power. Record the power level of maximum radiation power from spectrum. So, the measured substitution value = Ref level of S.G + TX cables loss – Substituted Antenna Gain.
4) Final Radiated Spurious Emission = "Read Value" + Measured substitution value.

6.11.2. Test Result (Analog)

NA → Not Applicable

6.11.3. Test Result (Digital)

SAC Transmitter Radiated Emission

Model Number: AAH81QCN9TA2AN **S/N: 682TTT1760** **SR:10337-EMC-00008**

Battery Part No: PMNN4468A **Accy Part No: PMAE4078B**

Test Mode: TX Digital

406.200000 MHz **12.5 kHz** **3.600 Watt(s) /Max Power**

Frequency (MHz)	Limit	Horizontal Measured Emission Equiv Pwr Into Ideal Dipole (dBm)	Vertical Measured Emission Equiv Pwr Into ideal Dipole (dBm)
444.5820	-20.0000	-78.2800 *	-75.9300 *
812.4000	-20.0000	-53.9600 *	-46.5900 *
1218.6000	-20.0000	-54.4700 *	-49.6400 *
1624.8000	-20.0000	-57.4100 *	-53.2100 *
2031.0000	-20.0000	-49.8400 *	-42.0500 *
2437.2000	-20.0000	-57.3724 **	-53.1874 **
2843.4000	-20.0000	-55.5374 **	-56.3281 **
3249.6000	-20.0000	-52.4723 **	-52.9958 **
3655.8000	-20.0000	-54.1318 **	-54.0770 **
4062.0000	-20.0000	-50.8887 **	-51.2344 **

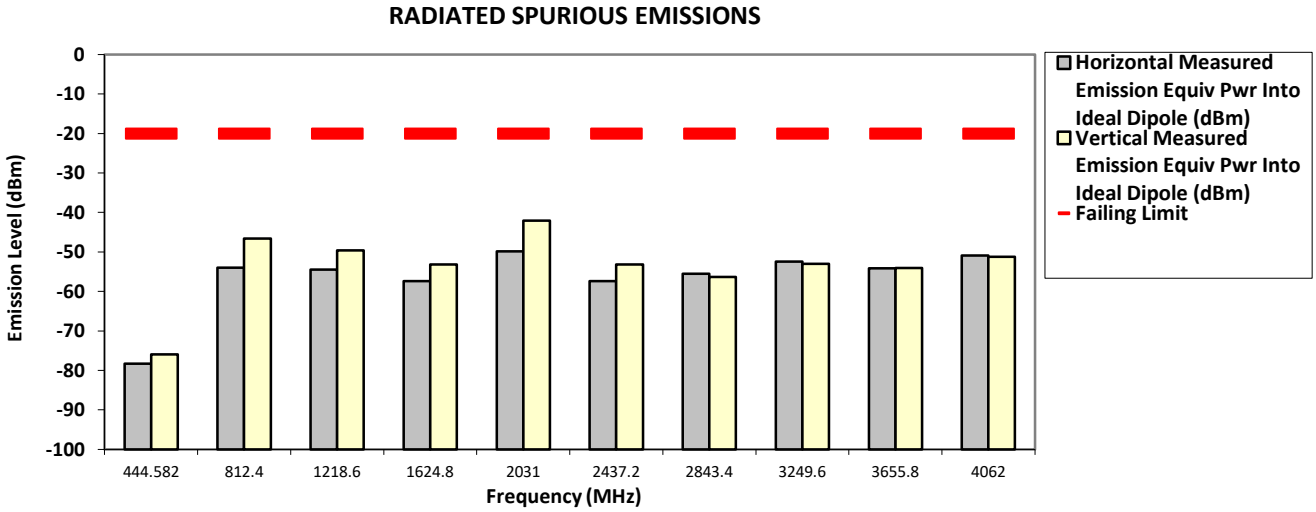

The data presented here was taken using the substitution method as found in the TIA/EIA-603E document.

Motorola Penang EMC Lab - Test Performed by: Azil & Nazrin **Fri, Nov 17, 2017**

Industry Canada: 109AK

Remarks: ** Indicates the spurious emission could not be detected due to noise limitations or ambient.

***Pursuant to CFR 47 Part 2.1057 (c), emissions attenuated more than 20 dB below the permissible limit are not reported**

Temp(Deg): 23.2 Hum(%RH): 68.2

System MU: 5.01 dB

Remarks:

Passed Results	Marginal Results	Failed Results

SAC Transmitter Radiated Emission

Model Number: AAH81QCN9TA2AN **S/N: 682TTT1789** **SR:10337-EMC-00008**

Battery Part No: PMNN4468A **Accy Part No: PMAE4077B**

Test Mode: TX Digital

450.650000 MHz **12.5 kHz** **1.000 Watt(s) /Low Power**

Frequency (MHz)	Limit	Horizontal Measured Emission Equiv Pwr Into Ideal Dipole (dBm)	Vertical Measured Emission Equiv Pwr Into ideal Dipole (dBm)
432.5540	-20.0000	-79.7400 *	-78.7400 *
901.3000	-20.0000	-57.9600 *	-50.2300 *
1351.9500	-20.0000	-52.3200 *	-43.3400 *
1802.6000	-20.0000	-56.2000 *	-54.0900 *
2253.2500	-20.0000	-54.1100 *	-46.4900 *
2703.9000	-20.0000	-53.4533 **	-54.0661 **
3154.5500	-20.0000	-44.2400 *	-50.1000 *
3605.2000	-20.0000	-52.9357 **	-53.7519 **
4055.8500	-20.0000	-50.5613 **	-52.1298 **
4506.5000	-20.0000	-50.9813 **	-50.8403 **

RADIATED SPURIOUS EMISSIONS

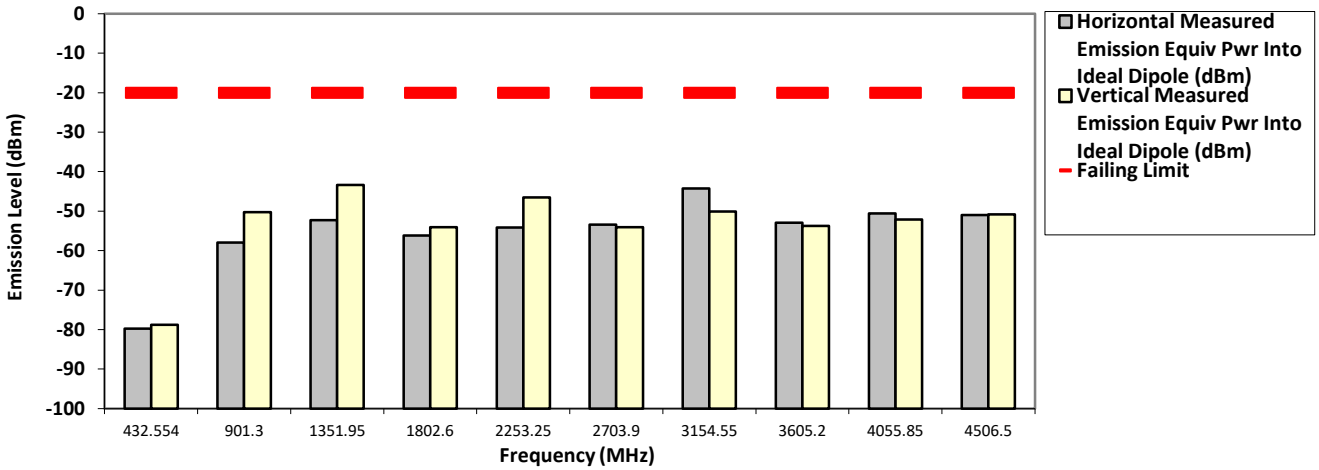

The data presented here was taken using the substitution method as found in the TIA/EIA-603E document.

Motorola Penang EMC Lab - Test Performed by: Azil & Nazrin **Fri, Nov 17, 2017**

Industry Canada: 109AK

Remarks: ** Indicates the spurious emission could not be detected due to noise limitations or ambient.

***Pursuant to CFR 47 Part 2.1057 (c), emissions attenuated more than 20 dB below the permissible limit are not reported**

Temp(Deg): 23.2 Hum(%RH): 68.2

System MU: 5.01 dB

Remarks:

Passed Results	**Marginal Results**	**Failed Results**

SAC Transmitter Radiated Emission

Model Number: AAH81QCN9TA2AN **S/N: 682TTT1789** **SR:10337-EMC-00008**

Battery Part No: PMNN4468A **Accy Part No: PMAE4077B**

Test Mode: TX Digital

450.650000 MHz **12.5 kHz** **3.600 Watt(s) /Max Power**

Frequency (MHz)	Limit	Horizontal Measured Emission Equiv Pwr Into Ideal Dipole (dBm)	Vertical Measured Emission Equiv Pwr Into ideal Dipole (dBm)
398.8000	-20.0000	-79.8800 *	-80.7500 *
432.5540	-20.0000	-78.5700 *	-75.9400 *
437.1130	-20.0000	-79.4300 *	-80.0800 *
901.3000	-20.0000	-53.2900 *	-46.2500 *
1351.9500	-20.0000	-55.2000 *	-43.3900 *
1802.6000	-20.0000	-56.4000 *	-52.9100 *
2253.2500	-20.0000	-48.2900 *	-41.2800 *
2703.9000	-20.0000	-51.3900 *	-52.2600 *
3154.5500	-20.0000	-44.5200 *	-50.1700 *
3605.2000	-20.0000	-52.8462 **	-50.3994 **
4055.8500	-20.0000	-52.0081 **	-50.7279 **
4506.5000	-20.0000	-50.2809 **	-50.9826 **

RADIATED SPURIOUS EMISSIONS

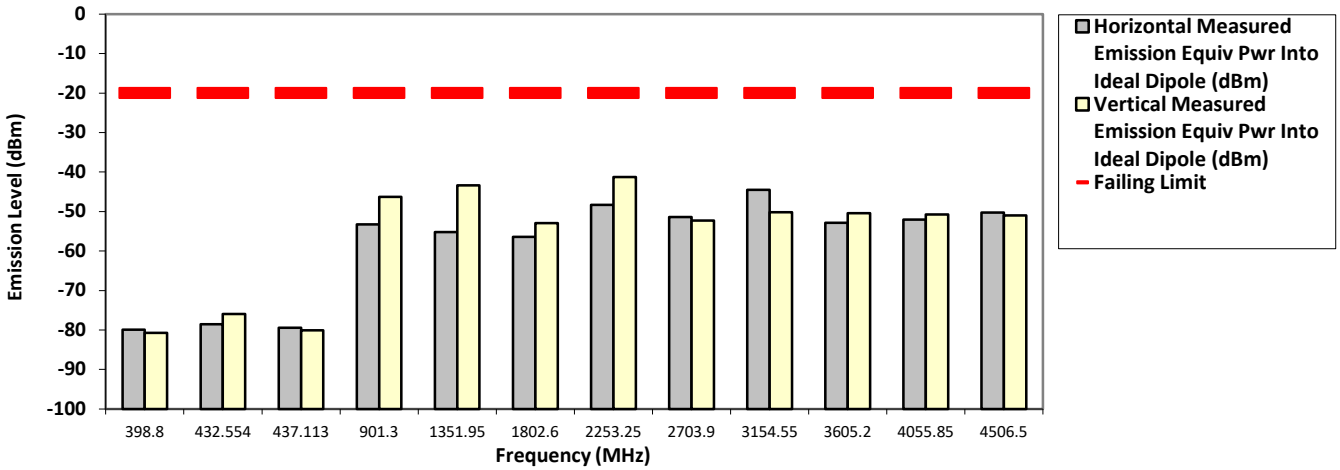

The data presented here was taken using the substitution method as found in the TIA/EIA-603E document.

Motorola Penang EMC Lab - Test Performed by: Azil & Nazrin **Fri, Nov 17, 2017**

Industry Canada: 109AK

Remarks: ** Indicates the spurious emission could not be detected due to noise limitations or ambient.

***Pursuant to CFR 47 Part 2.1057 (c), emissions attenuated more than 20 dB below the permissible limit are not reported**

Temp(Deg): 23.2 Hum(%RH): 68.2

System MU: 5.01 dB

Remarks:

Passed Results	**Marginal Results**	**Failed Results**

SAC Transmitter Radiated Emission

Model Number: AAH81QCN9TA2AN **S/N: 682TTT1789** **SR:10337-EMC-00008**

Battery Part No: PMNN4468A **Accy Part No: PMAE4077B**

Test Mode: TX Digital

459.125000 MHz **12.5 kHz** **3.600 Watt(s) /Max Power**

Frequency (MHz)	Limit	Horizontal Measured Emission Equiv Pwr Into Ideal Dipole (dBm)	Vertical Measured Emission Equiv Pwr Into ideal Dipole (dBm)
424.0670	-20.0000	-79.7500 *	-77.7800 *
494.1950	-20.0000	-79.2100 *	-79.3600 *
918.2500	-20.0000	-52.5100 *	-44.9200
1377.3750	-20.0000	-52.6300 *	-44.6200 *
1836.5000	-20.0000	-55.9300 *	-52.6600 *
2295.6250	-20.0000	-48.8000 *	-43.6500 *
2754.7500	-20.0000	-50.8400 *	-51.7500 *
3213.8750	-20.0000	-45.2400 *	-49.2900 *
3673.0000	-20.0000	-53.5551 **	-52.2382 **
4132.1250	-20.0000	-52.3231 **	-51.1639 **
4591.2500	-20.0000	-50.9918 **	-50.0439 **

RADIATED SPURIOUS EMISSIONS

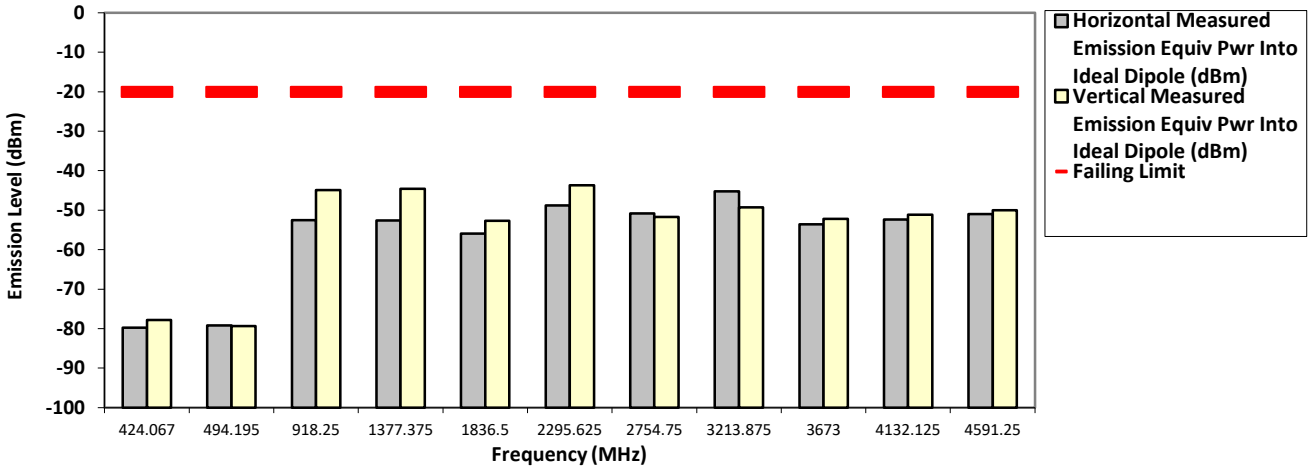

The data presented here was taken using the substitution method as found in the TIA/EIA-603E document.

Motorola Penang EMC Lab - Test Performed by: Azil & Nazrin **Fri, Nov 17, 2017**

Industry Canada: 109AK

Remarks: ** Indicates the spurious emission could not be detected due to noise limitations or ambient.

***Pursuant to CFR 47 Part 2.1057 (c), emissions attenuated more than 20 dB below the permissible limit are not reported**

Temp(Deg): 23.2 Hum(%RH): 68.2

System MU: 5.01 dB

Remarks: Passed Results | **Marginal Results** | **Failed Results**

SAC Transmitter Radiated Emission

Model Number: AAH81QCN9TA2AN **S/N: 682TTT1789** **SR:10337-EMC-00008**

Battery Part No: PMNN4468A **Accy Part No: PMAE4077B**

Test Mode: TX Digital

467.775000 MHz **12.5 kHz** **1.000 Watt(s) /Low Power**

Frequency (MHz)	Limit	Horizontal Measured Emission Equiv Pwr Into Ideal Dipole (dBm)	Vertical Measured Emission Equiv Pwr Into ideal Dipole (dBm)
443.3690	-20.0000	-79.8600 *	-79.2500 *
935.5500	-20.0000	-61.4200 *	-56.4600 *
1403.3250	-20.0000	-52.1000 *	-41.9000 *
1871.1000	-20.0000	-59.4983 **	-58.6411 **
2338.8750	-20.0000	-57.2411 **	-57.5062 **
2806.6500	-20.0000	-56.4732 **	-56.2265 **
3274.4250	-20.0000	-52.2036 **	-52.9391 **
3742.2000	-20.0000	-54.1109 **	-53.7925 **
4209.9750	-20.0000	-50.6106 **	-52.1346 **
4677.7500	-20.0000	-49.4906 **	-50.3141 **

RADIATED SPURIOUS EMISSIONS

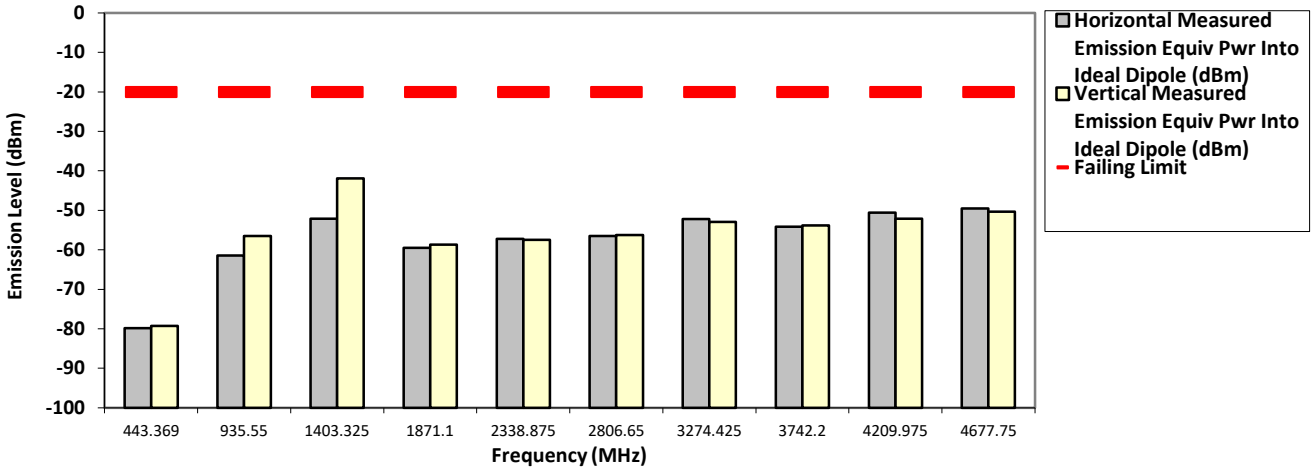

The data presented here was taken using the substitution method as found in the TIA/EIA-603E document.

Motorola Penang EMC Lab - Test Performed by: Azil & Nazrin **Fri, Nov 17, 2017**

Industry Canada: 109AK

Remarks: ** Indicates the spurious emission could not be detected due to noise limitations or ambient.

***Pursuant to CFR 47 Part 2.1057 (c), emissions attenuated more than 20 dB below the permissible limit are not reported**

Temp(Deg): 23.2 Hum(%RH): 68.2

System MU: 5.01 dB

Remarks:

Passed Results	**Marginal Results**	**Failed Results**

SAC Transmitter Radiated Emission

Model Number: AAH81QCN9TA2AN **S/N: 682TTT1789** **SR:10337-EMC-00008**

Battery Part No: PMNN4468A **Accy Part No: PMAE4077B**

Test Mode: TX Digital

467.775000 MHz **12.5 kHz** **3.600 Watt(s) /Max Power**

Frequency (MHz)	Limit	Horizontal Measured Emission Equiv Pwr Into Ideal Dipole (dBm)	Vertical Measured Emission Equiv Pwr Into ideal Dipole (dBm)
443.3210	-20.0000	-79.4100 *	-78.3100 *
453.8450	-20.0000	-78.6600 *	-77.9900 *
520.1410	-20.0000	-79.0300 *	-78.4900 *
935.5500	-20.0000	-54.7600 *	-45.4900 *
1403.3250	-20.0000	-53.1000 *	-45.0700 *
1871.1000	-20.0000	-53.7800 *	-49.3000 *
2338.8750	-20.0000	-50.7200 *	-51.3000 *
2806.6500	-20.0000	-49.6000 *	-52.2600 *
3274.4250	-20.0000	-50.8327 **	-52.2808 **
3742.2000	-20.0000	-53.9162 **	-52.5145 **
4209.9750	-20.0000	-51.8998 **	-52.0451 **
4677.7500	-20.0000	-49.0062 **	-49.6401 **

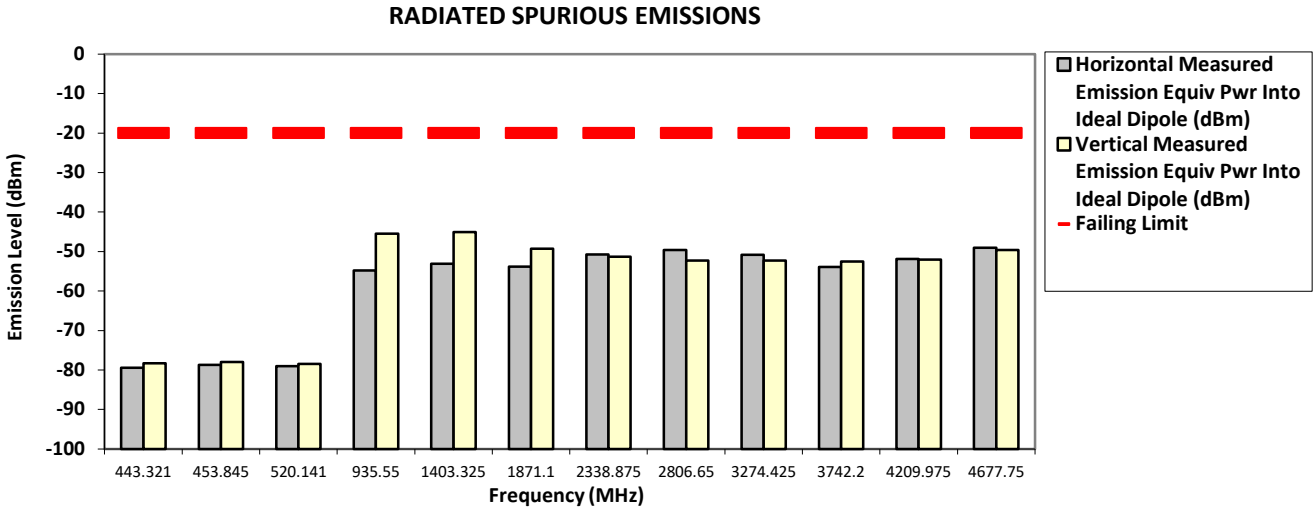

The data presented here was taken using the substitution method as found in the TIA/EIA-603E document.

Motorola Penang EMC Lab - Test Performed by: Azil & Nazrin **Fri, Nov 17, 2017**

Industry Canada: 109AK

Remarks: ** Indicates the spurious emission could not be detected due to noise limitations or ambient.

***Pursuant to CFR 47 Part 2.1057 (c), emissions attenuated more than 20 dB below the permissible limit are not reported**

Temp(Deg): 23.2 Hum(%RH): 68.2

System MU: 5.01 dB

Remarks:

Passed Results	Marginal Results	Failed Results

SAC Transmitter Radiated Emission:

Model Number: AAH81QCN9TA2AN **S/N: 682TTT1760** **SR:10337-EMC-00008**

Battery Part No: PMNN4468A **Accy Part No: PMAE4078B**

Test Mode: TX Digital

406.200000 MHz **12.5 kHz** **3.600 Watt(s) /Max Power**

Frequency (MHz)	Limit	Horizontal Measured Emission Equiv Pwr Into Ideal Dipole (dBm)	Vertical Measured Emission Equiv Pwr Into ideal Dipole (dBm)
444.5820	-20.0000	-78.0200 *	-75.1100 *
812.4000	-20.0000	-46.4700 *	-52.8800 *
1218.6000	-20.0000	-49.1700 *	-50.1900 *
1624.8000	-20.0000	-57.0500 *	-51.3900 *
2031.0000	-20.0000	-46.6200 *	-31.4200
2437.2000	-20.0000	-57.3724 **	-53.1874 **
2843.4000	-20.0000	-55.5374 **	-56.3281 **
3249.6000	-20.0000	-52.4723 **	-52.9958 **
3655.8000	-20.0000	-54.1318 **	-54.0770 **
4062.0000	-20.0000	-50.8887 **	-51.2344 **

RADIATED SPURIOUS EMISSIONS

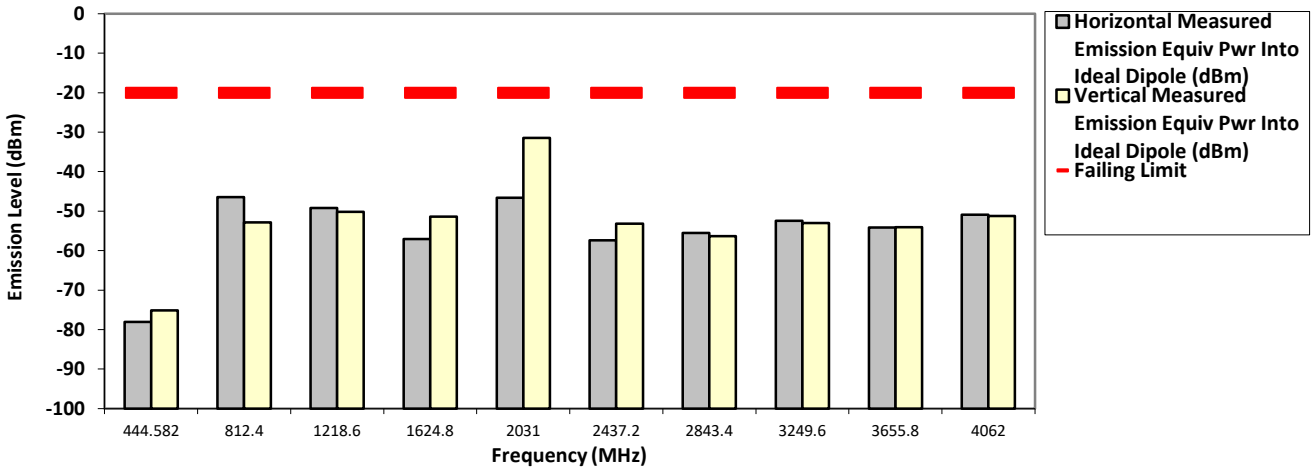

The data presented here was taken using the substitution method as found in the ANSI C63.26 document.

Motorola Penang EMC Lab - Test Performed by: Nazrin&Qawiman **Fri, Nov 17, 2017**

Industry Canada: 109AK

Remarks: ** Indicates the spurious emission could not be detected due to noise limitations or ambient.

***Pursuant to CFR 47 Part 2.1057 (c), emissions attenuated more than 20 dB below the permissible limit are not reported**

Temp(Deg): 23.2 Hum(%RH): 68.2

System MU: 5.01 dB

Remarks:

Passed Results	**Marginal Results**	**Failed Results**

SAC Transmitter Radiated Emission:

Model Number: AAH81QCN9TA2AN **S/N: 682TTT1760** **SR:10337-EMC-00008**

Battery Part No: PMNN4468A **Accy Part No: PMAE4077B**

Test Mode: TX Digital

450.650000 MHz **12.5 kHz** **1.000 Watt(s) /Low Power**

Frequency (MHz)	Limit	Horizontal Measured Emission Equiv Pwr Into Ideal Dipole (dBm)	Vertical Measured Emission Equiv Pwr Into ideal Dipole (dBm)
432.5540	-20.0000	-78.4600 *	-80.2400 *
901.3000	-20.0000	-56.9600 *	-46.5100 *
1351.9500	-20.0000	-53.7800 *	-43.8300 *
1802.6000	-20.0000	-55.1400 *	-51.8400 *
2253.2500	-20.0000	-48.5200 *	-41.5500 *
2703.9000	-20.0000	-53.4533 **	-54.0661 **
3154.5500	-20.0000	-44.9100 *	-48.1400 *
3605.2000	-20.0000	-52.9357 **	-53.7519 **
4055.8500	-20.0000	-50.5613 **	-52.1298 **
4506.5000	-20.0000	-50.9813 **	-50.8403 **

RADIATED SPURIOUS EMISSIONS

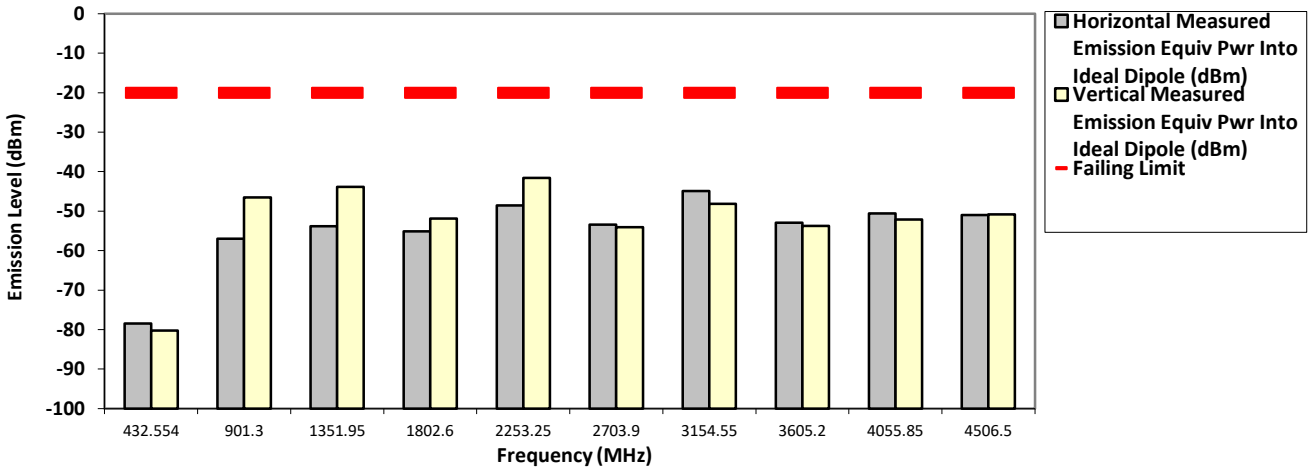

The data presented here was taken using the substitution method as found in the ANSI C63.26 document.

Motorola Penang EMC Lab - Test Performed by: Nazrin&Qawiman **Sat, Nov 18, 2017**

Industry Canada: 109AK

Remarks: ** Indicates the spurious emission could not be detected due to noise limitations or ambient.

***Pursuant to CFR 47 Part 2.1057 (c), emissions attenuated more than 20 dB below the permissible limit are not reported**

Temp(Deg): 23.2 Hum(%RH): 68.2

System MU: 5.01 dB

Remarks:

Passed Results	**Marginal Results**	**Failed Results**

SAC Transmitter Radiated Emission:

Model Number: AAH81QCN9TA2AN **S/N: 682TTT1760** **SR:10337-EMC-00008**

Battery Part No: PMNN4468A **Accy Part No: PMAE4077B**

Test Mode: TX Digital

450.650000 MHz **12.5 kHz** **3.600 Watt(s) /Max Power**

Frequency (MHz)	Limit	Horizontal Measured Emission Equiv Pwr Into Ideal Dipole (dBm)	Vertical Measured Emission Equiv Pwr Into ideal Dipole (dBm)
398.8000	-20.0000	-78.3900 *	-79.9700 *
432.5540	-20.0000	-78.3900 *	-75.0500 *
437.1130	-20.0000	-78.7100 *	-80.1900 *
901.3000	-20.0000	-55.2700 *	-47.9800 *
1351.9500	-20.0000	-53.2600 *	-43.8300 *
1802.6000	-20.0000	-54.7900 *	-45.2200 *
2253.2500	-20.0000	-49.9300 *	-46.4700 *
2703.9000	-20.0000	-51.3900 *	-50.8300 *
3154.5500	-20.0000	-43.8400 *	-47.7900 *
3605.2000	-20.0000	-52.8462 **	-50.3994 **
4055.8500	-20.0000	-52.0081 **	-50.7279 **
4506.5000	-20.0000	-50.2809 **	-50.9826 **

RADIATED SPURIOUS EMISSIONS

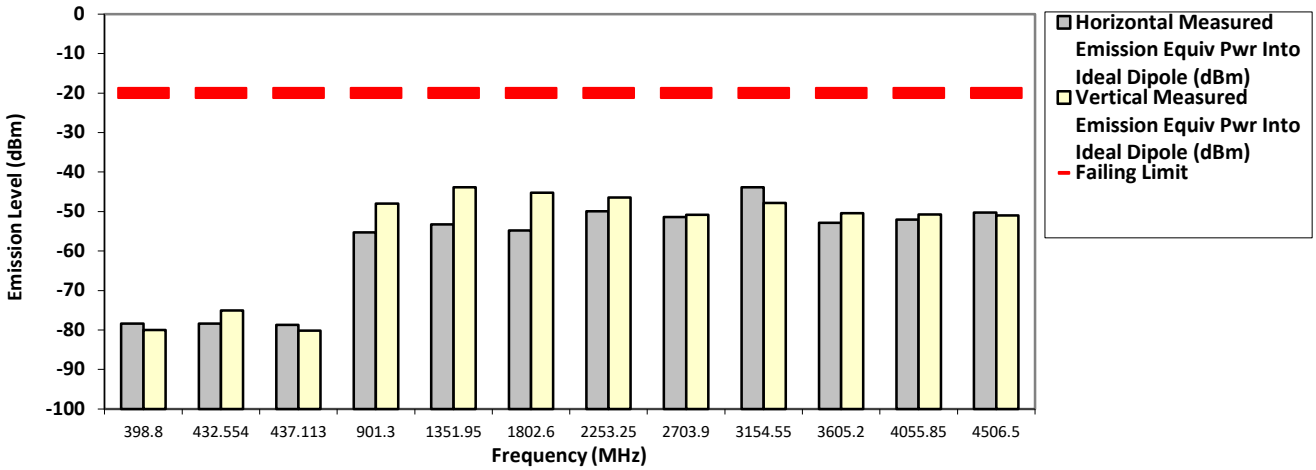

The data presented here was taken using the substitution method as found in the ANSI C63.26 document.

Motorola Penang EMC Lab - Test Performed by: Nazrin&Qawiman **Sat, Nov 18, 2017**

Industry Canada: 109AK

Remarks: ** Indicates the spurious emission could not be detected due to noise limitations or ambient.

***Pursuant to CFR 47 Part 2.1057 (c), emissions attenuated more than 20 dB below the permissible limit are not reported**

Temp(Deg): 23.2 Hum(%RH): 68.2

System MU: 5.01 dB

Remarks:

Passed Results	**Marginal Results**	**Failed Results**

SAC Transmitter Radiated Emission:

Model Number: AAH81QCN9TA2AN **S/N: 682TTT1760** **SR:10337-EMC-00008**

Battery Part No: PMNN4468A **Accy Part No: PMAE4077B**

Test Mode: TX Digital

467.775000 MHz **12.5 kHz** **1.000 Watt(s) /Low Power**

Frequency (MHz)	Limit	Horizontal Measured Emission Equiv Pwr Into Ideal Dipole (dBm)	Vertical Measured Emission Equiv Pwr Into ideal Dipole (dBm)
443.3690	-20.0000	-78.8300 *	-78.4300 *
935.5500	-20.0000	-61.7000 *	-50.9000 *
1403.3250	-20.0000	-51.4800 *	-41.0000 *
1871.1000	-20.0000	-59.4983 **	-58.6411 **
2338.8750	-20.0000	-57.2411 **	-57.5062 **
2806.6500	-20.0000	-56.4732 **	-56.2265 **
3274.4250	-20.0000	-52.2036 **	-52.9391 **
3742.2000	-20.0000	-54.1109 **	-53.7925 **
4209.9750	-20.0000	-50.6106 **	-52.1346 **
4677.7500	-20.0000	-49.4906 **	-50.3141 **

RADIATED SPURIOUS EMISSIONS

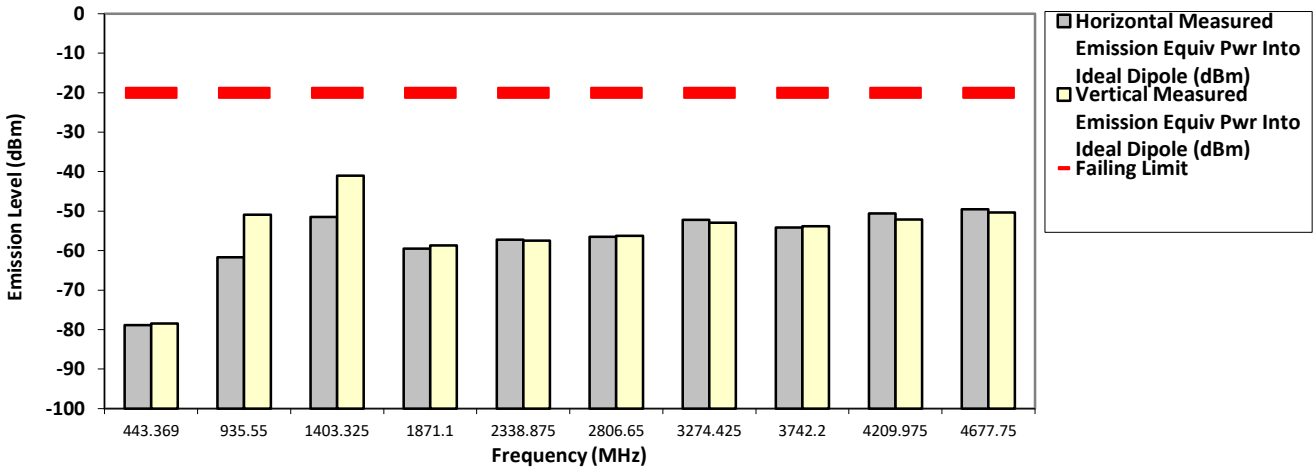

The data presented here was taken using the substitution method as found in the ANSI C63.26 document.

Motorola Penang EMC Lab - Test Performed by: Nazrin&Qawiman **Sat, Nov 18, 2017**

Industry Canada: 109AK

Remarks: ** Indicates the spurious emission could not be detected due to noise limitations or ambient.

***Pursuant to CFR 47 Part 2.1057 (c), emissions attenuated more than 20 dB below the permissible limit are not reported**

Temp(Deg): 23.2 Hum(%RH): 68.2

System MU: 5.01 dB

Remarks:

Passed Results	**Marginal Results**	**Failed Results**

SAC Transmitter Radiated Emission:

Model Number: AAH81QCN9TA2AN **S/N: 682TTT1760** **SR:10337-EMC-00008**

Battery Part No: PMNN4468A **Accy Part No: PMAE4077B**

Test Mode: TX Digital

467.775000 MHz **12.5 kHz** **3.600 Watt(s) /Max Power**

Frequency (MHz)	Limit	Horizontal Measured Emission Equiv Pwr Into Ideal Dipole (dBm)	Vertical Measured Emission Equiv Pwr Into ideal Dipole (dBm)
443.3210	-20.0000	-78.8400 *	-78.2700 *
453.8450	-20.0000	-78.7300 *	-76.9100 *
520.1410	-20.0000	-77.6100 *	-78.9100 *
935.5500	-20.0000	-60.6700 *	-49.8300 *
1403.3250	-20.0000	-56.5200 *	-49.8300 *
1871.1000	-20.0000	-55.7300 *	-49.0400 *
2338.8750	-20.0000	-53.2100 *	-51.7700 *
2806.6500	-20.0000	-51.4800 *	-51.1700 *
3274.4250	-20.0000	-50.8327 **	-52.2808 **
3742.2000	-20.0000	-53.9162 **	-52.5145 **
4209.9750	-20.0000	-51.8998 **	-52.0451 **
4677.7500	-20.0000	-49.0062 **	-49.6401 **

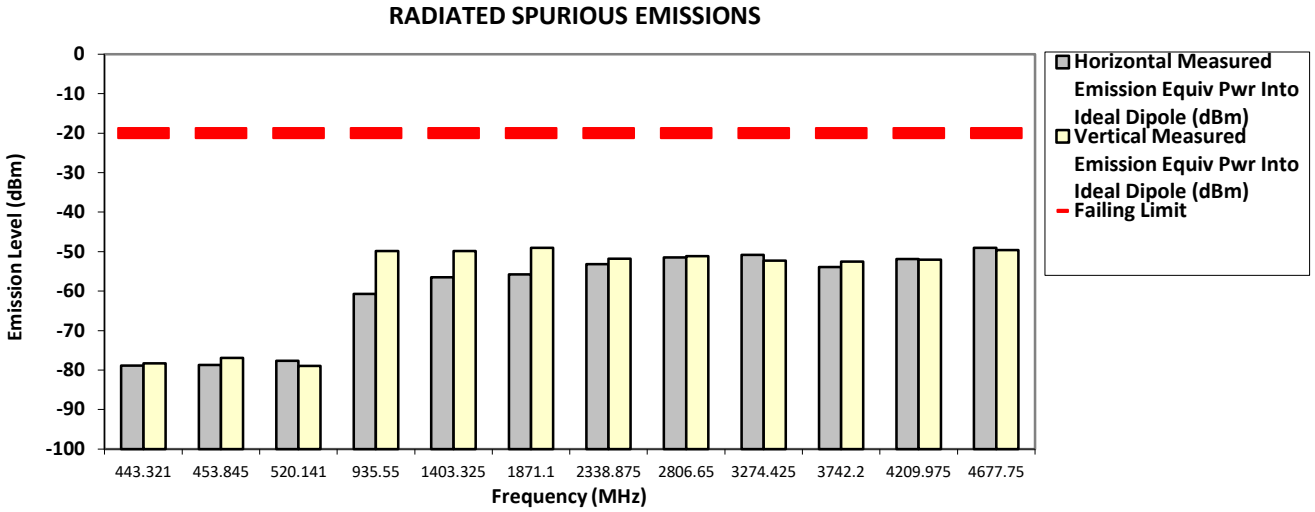

The data presented here was taken using the substitution method as found in the ANSI C63.26 document.

Motorola Penang EMC Lab - Test Performed by: Nazrin&Qawiman **Sat, Nov 18, 2017**

Industry Canada: 109AK

Remarks: ** Indicates the spurious emission could not be detected due to noise limitations or ambient.

***Pursuant to CFR 47 Part 2.1057 (c), emissions attenuated more than 20 dB below the permissible limit are not reported**

Temp(Deg): 23.2 Hum(%RH): 68.2

System MU: 5.01 dB

Remarks: Passed Results | **Marginal Results** | **Failed Results**

6.11.4. Test Limit

Table below summarized the power of any emission outside a licensee's frequency block shall be attenuated below the transmitter power (P) by at least

Channel Spacing	Part 22	Part 24D	Part 74	Part 80	Part 90 (UHF, VHF, 800, 900)	Part 90 (700)
12.5kHz	43 + log10(P) (-13 dBm)	43 + log10(P) (-13 dBm)	43 + log10(P) (-13 dBm)	Not Applicable	50 + log10(P) (-20 dBm)	43 + log10(P) (-13 dBm)
25kHz		Not Applicable		43 + log10(P) (-13 dBm)	43 + log10(P) (-13 dBm)	43 + log10(P) (-13 dBm)

Channel Spacing	RSS 134	RSS 182	RSS 119 (UHF, VHF, 800, 900)	RSS 119 (700)
12.5kHz	43 + log10(P) (-13 dBm)	Not Applicable	50 + log10(P) (-20 dBm)	43 + log10(P) (-13 dBm)
25kHz	Not Applicable	43 + log10(P) (-13 dBm)	43 + log10(P) (-13 dBm)	43 + log10(P) (-13 dBm)

6.12. Effective Radiated Power (ERP)

6.12.1. Test Setup

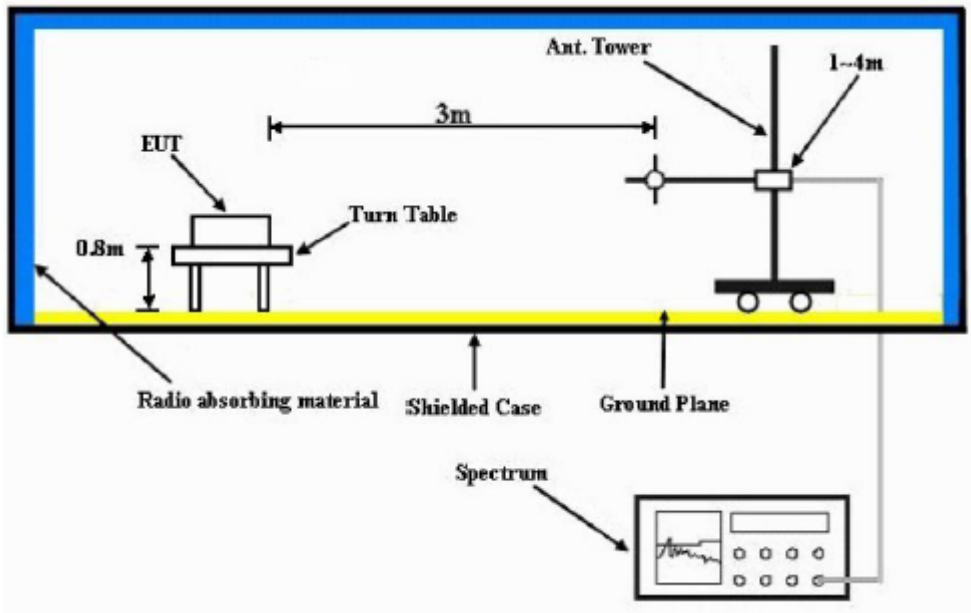

1) The Resolution Bandwidth for Equivalent Radiated Power (ERP) below 1 GHz is 100 kHz with Video Bandwidth = 300 kHz and Resolution Bandwidth for EIRP above 1 GHz is 1 MHz with Video Bandwidth = 3 MHz. Detector Mode is RMS.
2) In the semi-anechoic chamber, setup as illustrated above the DUT placed on the 0.8m height of Turn Table, rotated the table 45 degree each interval to search the maximum radiation power and receiver antenna shall be rotated vertical and horizontal polarization and moved height from 1m to 4m to find the maximum polar radiated power for each degree interval. The "Read Value" is the spectrum reading of maximum power value.
3) The substitution antenna is substituted for DUT at the same position and signals generator (S.G) export the CW signal to the substitution antenna via a TX cable. The receiver antenna shall be rotated vertical and horizontal polarization and moved height from 1m to 4m to find the maximum radiation power. Record the power level of maximum radiation power from spectrum. So, the Measured substitution value = Ref level of S.G + TX cables loss – Substituted Antenna Gain.

6.12.2. Test Result

NA → **Not Applicable**

6.12.3. Test Limit

The maximum output power of the transmitter for mobile stations is 100 watts (20 dB). Power is given in terms of effective radiated power (ERP).

6.13. GNSS (EIRP for 1559 - 1610MHz)

6.13.1. Test Setup

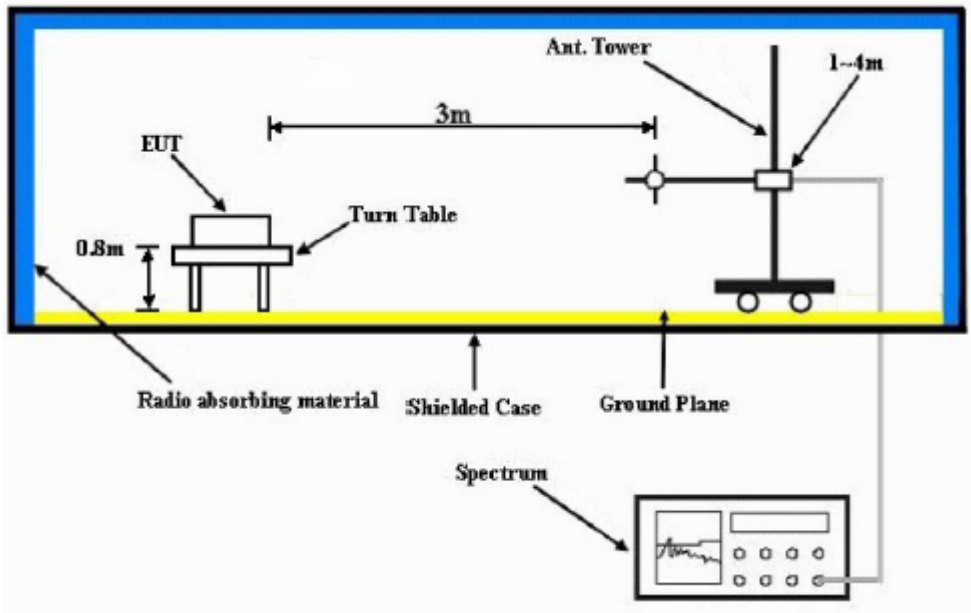

4) The Resolution Bandwidth for Equivalent Isotropically Radiated Power (EIRP) below 1 GHz is 100 kHz with Video Bandwidth = 300 kHz and Resolution Bandwidth for EIRP above 1 GHz is 1 MHz with Video Bandwidth = 3 MHz. Detector Mode is RMS.
5) In the semi-anechoic chamber, setup as illustrated above the DUT placed on the 0.8m height of Turn Table, rotated the table 45 degree each interval to search the maximum radiation power and receiver antenna shall be rotated vertical and horizontal polarization and moved height from 1m to 4m to find the maximum polar radiated power for each degree interval. The "Read Value" is the spectrum reading of maximum power value.
6) The substitution antenna is substituted for DUT at the same position and signals generator (S.G) export the CW signal to the substitution antenna via a TX cable. The receiver antenna shall be rotated vertical and horizontal polarization and moved height from 1m to 4m to find the maximum radiation power. Record the power level of maximum radiation power from spectrum. So, the Measured substitution value = Ref level of S.G + TX cables loss – Substituted Antenna Gain.
7) EIRP = "Read Value" + Measured substitution value + 2.15.

6.13.1. Test Result

NA → **Not Applicable**

6.13.2. Test Limit

For operations in the 758-775 MHz and 788-805 MHz bands, all emissions including harmonics in the band 1559-1610 MHz shall be limited to −70 dBW/MHz equivalent isotropically radiated power (EIRP) for wideband signals, and −80 dBW EIRP for discrete emissions of less than 700 Hz bandwidth.

~ End of Report ~