# FCC Part 96.47 Test Report

| | | |
|---|---|---|
| **Applicant** | : | **Motorola Solutions Inc.** |
| **Equipment** | : | **MSLB-MKZ900 400-512 4W LTE CBRS GNSS BT WiFi** |
| **Brand Name** | : | **Motorola Solutions** |
| **Model Name** | : | **MSLB-MKZ900** |
| **Model Number** | : | **AAH90ZDU9RH1AN** |
| **FCC ID** | : | **AZ489FT7133** |
| **Standard** | : | **FCC Part 96.47** |

**The product was received on Aug. 28, 2020 and testing was started from Sep. 23, 2020 and completed on Sep. 23, 2020. We, Sporton International (Kunshan) Inc., would like to declare that the tested sample has been evaluated in accordance with the test procedures and has been in compliance with the applicable technical standards.**
**The test results in this report apply exclusively to the tested model / sample. Without written approval of Sporton International (Kunshan) Inc., the test report shall not be reproduced except in full.**

Jason Jia

**Reviewed by: Jason Jia / Supervisor**

James Huang

**Approved by: James Huang / Manager**

ACCREDITED
Cert #5145.02

***Sporton International (Kunshan) Inc.***
***No. 1098, Pengxi North Road, Kunshan Economic Development Zone Jiangsu Province 215300 People's Republic of China***

# Table of Contents

**1 GENERAL DESCRIPTION ..... 5**

1.1 APPLICANT ..... 5
1.2 MANUFACTURER ..... 5
1.3 PRODUCT FEATURE OF EQUIPMENT UNDER TEST ..... 5
1.4 PRODUCT SPECIFICATION OF EQUIPMENT UNDER TEST ..... 5
1.5 TESTING LOCATION ..... 6
1.6 TEST SOFTWARE ..... 6
1.7 APPLICABLE STANDARDS ..... 6

**2 TEST CONFIGURATION OF EQUIPMENT UNDER TEST ..... 7**

2.1 CONNECTION DIAGRAM OF TEST SYSTEM ..... 7

**3 END USER DEVICE ADDITIONAL REQUIREMENT ..... 8**

3.1 TEST REQUIREMENT ..... 8
3.2 TEST PROCEDURE ..... 8
3.3 TEST RESULT ..... 9

**4 LIST OF MEASURING EQUIPMENT ..... 13**

**APPENDIX A. TEST SETUP PHOTO**

# History of this test report

| Report No. | Version | Description | Issued Date |
|---|---|---|---|
| FG082805B | 01 | Initial issue of report | Oct. 14, 2020 |
| | | | |
| | | | |
| | | | |
| | | | |
| | | | |
| | | | |
| | | | |
| | | | |
| | | | |
| | | | |
| | | | |
| | | | |
| | | | |
| | | | |

| Declaration of Conformity: |
|---|
| The test results with all measurement uncertainty excluded are presented in accordance with the regulation limits or requirements declared by manufacturers. |
| **Comments and Explanations:** |
| The declared of product specification for EUT presented in the report are provided by the manufacturer, and the manufacturer takes all the responsibilities for the accuracy of product specification. |

# Summary of Test Result

| Report Clause | Ref Std. Clause | Test Items | Result (PASS/FAIL) | Remark |
|---|---|---|---|---|
| 3 | 96.47 | End User Device additional requirement | Pass | - |

# 1 General Description

## 1.1 Applicant

**Motorola Solutions Inc.**
8000 West Sunrise Boulevard, Fort Lauderdale, Florida 33322

## 1.2 Manufacturer

**Motorola Solutions Malaysia Sdn. Bhd.**
No. 2A, Medan Bayan Lepas, Mukim 12, S.W.D., 11900 Bayan Lepas Penang, Malaysia

## 1.3 Product Feature of Equipment Under Test

| Product Feature | |
|---|---|
| **Equipment** | MSLB-MKZ900 400-512 4W LTE CBRS GNSS BT WiFi |
| **Brand Name** | Motorola Solutions |
| **Model Name** | MSLB-MKZ900 |
| **Model Number** | AAH90ZDU9RH1AN |
| **FCC ID** | AZ489FT7133 |
| **EUT supports Radios application** | LTE |
| **IMEI Code** | 352511260016845/352511260016852 |
| **HW Version** | P2B |
| **SW Version** | I02.21.01.0029 (BP), D00.00.65 (AP) |
| **EUT Stage** | Identical Prototype |

**Remark:** The above EUT's information was declared by manufacturer. Please refer to the specifications or user's manual for more detailed description.

## 1.4 Product Specification of Equipment Under Test

| Standards-related Product Specification | |
|---|---|
| **Tx Frequency** | LTE Band 48: 3552.5 MHz ~ 3697.5 MHz |
| **Rx Frequency** | LTE Band 48: 3552.5 MHz ~ 3697.5 MHz |
| **Antenna Type** | FPC Antenna |
| **Antenna Gain** | 3550 MHz -3600 MHz: 1.00dBi<br>3600.1MHz -3650 MHz: 1.00dBi<br>3650.1 MHz -3700 MHz: 1.50dBi |
| **Type of Modulation** | QPSK / 16QAM |

## 1.5 Testing Location

Sporton International (Kunshan) Inc. is accredited to ISO/IEC 17025:2017 by American Association for Laboratory Accreditation with Certificate Number 5145.02.

| | | | |
|---|---|---|---|
| **Test Firm** | Sporton International (Kunshan) Inc. | | |
| **Test Site Location** | No. 1098, Pengxi North Road, Kunshan Economic Development Zone<br>Jiangsu Province 215300 People's Republic of China<br>TEL : +86-512-57900158<br>FAX : +86-512-57900958 | | |
| **Test Site No.** | **Sporton Site No.** | **FCC Designation No.** | **FCC Test Firm Registration No.** |
| | DFS01-KS | CN1257 | 314309 |
| **Test Engineer** | Eloise Wang | | |
| **Temperature** | 21 ~ 22 ℃ | | |
| **Relative Humidity** | 46 ~ 47 % | | |

## 1.6 Test Software

| Item | Site | Manufactor | Name | Version |
|---|---|---|---|---|
| 1. | DFS01-KS | Sporton | DFS & Adaptivity Test Tools | 1.0 |

## 1.7 Applicable Standards

- FCC Part 96.47
- FCC KDB 940660 D01 Part 96 CBRS Eqpt v02
- WINNF-TS-0122-V1.0.1 CBRS CBSD Test Specification

**Remark:** All test items were verified and recorded according to the standards and without any deviation during the test.

# 2 Test Configuration of Equipment Under Test

## 2.1 Connection Diagram of Test System

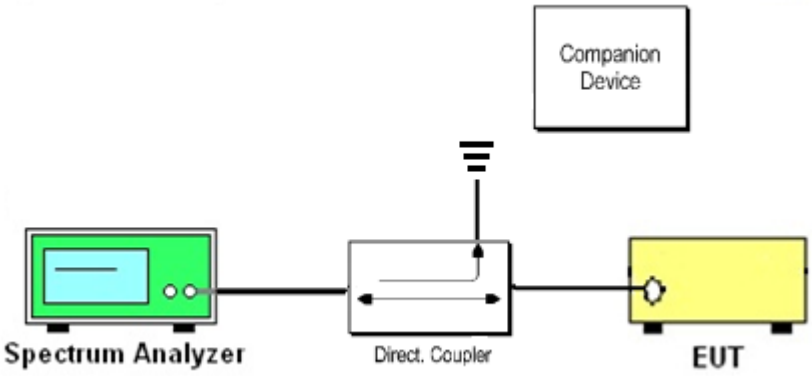


The companion device is certified CBRS (FCC ID: S9GQ710US00)

# 3 End User Device additional requirement

## 3.1 Test Requirement

FCC Part 96.47

(a) End User Devices may operate only if they can positively receive and decode an authorization signal transmitted by a CBSD, including the frequencies and power limits for their operation.

(1) An End User Device must discontinue operations, change frequencies, or change its operational power level within 10 seconds of receiving instructions from its associated CBSD.

## 3.2 Test Procedure

Following procedure can be done by applying WINNF-TS-0122-V1.0.1 CBRS CBSD Test Specification, use the certified Ruckus CBSD (FCC ID: S9GQ710US02) as companion device to show compliance with Part 96.47 requirement for End User Device (EUD):

1. Setup with frequency 3600-3620MHz and power level 17dBm/MHz
2. Enable AP service from Ruckus Cloud management
3. Check EUD Tx Frequency and power
4. Disable AP service from Ruckus Cloud management
    a. Check EUD stops transmission within 10seconds.

5. Setup with 3670-3690MHz & power level 7dBm/MHz
6. Enable AP service from Ruckus Cloud management
7. Check EUD Tx Frequency and power
8. Disable AP service from Ruckus Cloud management
    a. Check EUD stops transmission within 10seconds.

## 3.3 Test Result

| [Step 1] Setup with frequency 3600-3620MHz and power level 17dBm/MHz |
|---|
| [Step 3] Check EUD Tx Frequency and power |

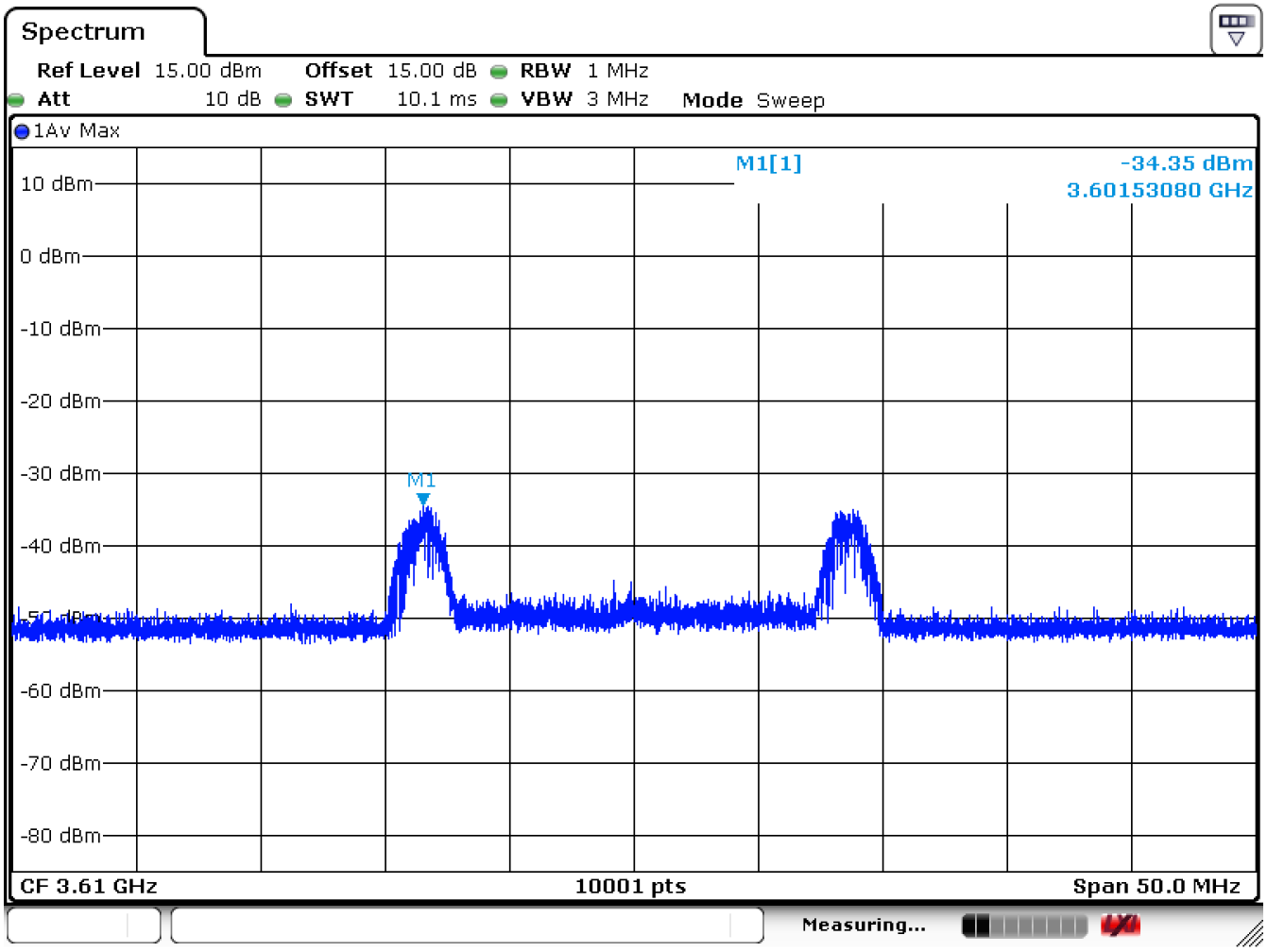

[Step 4.a.] EUD stops transmission within 10 seconds of receiving instructions from its associated CBSD.

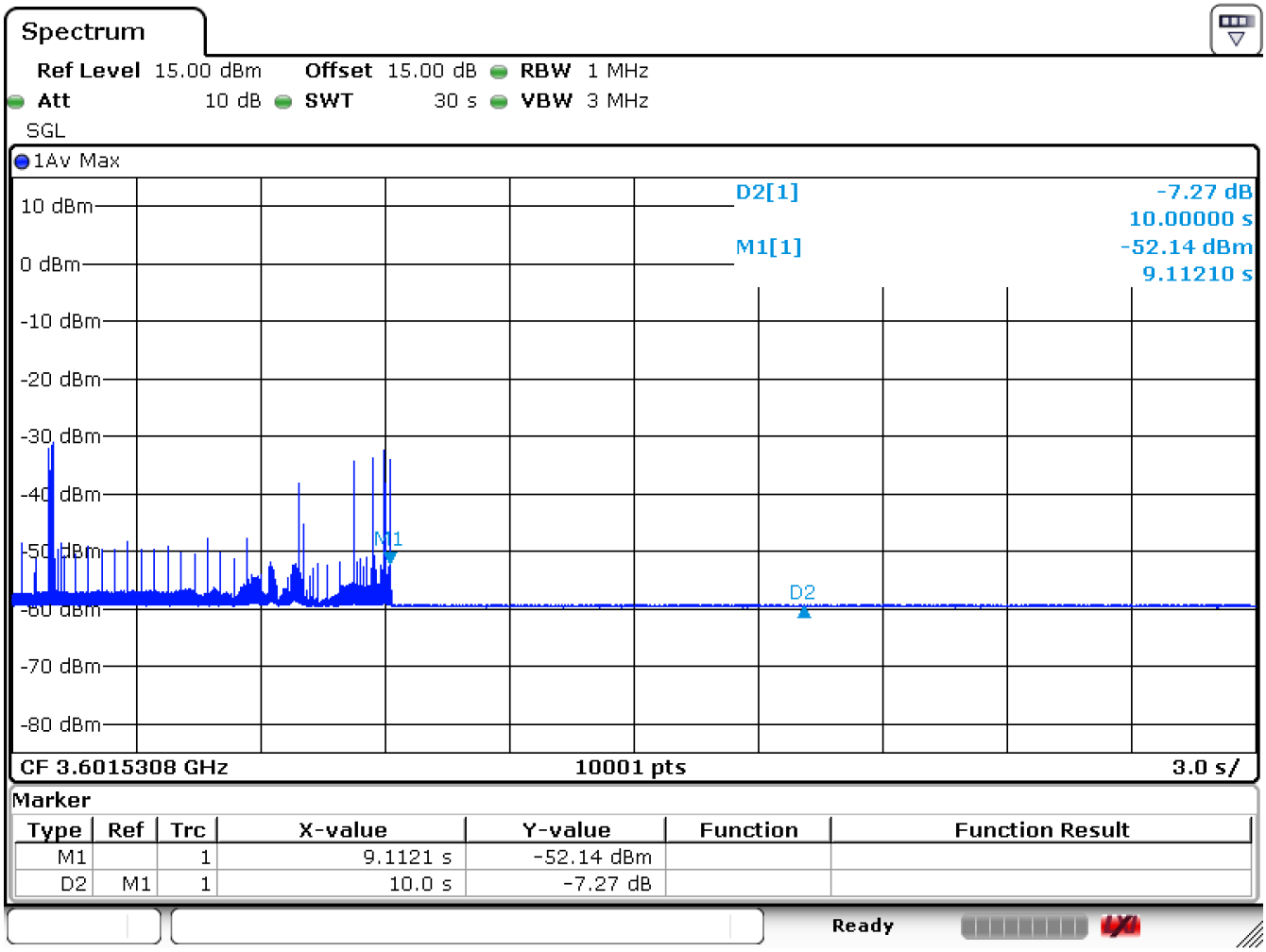

[Step 5] Setup with 3670-3690MHz & power level 7dBm/MHz

[Step 7] Check EUD Tx Frequency and power

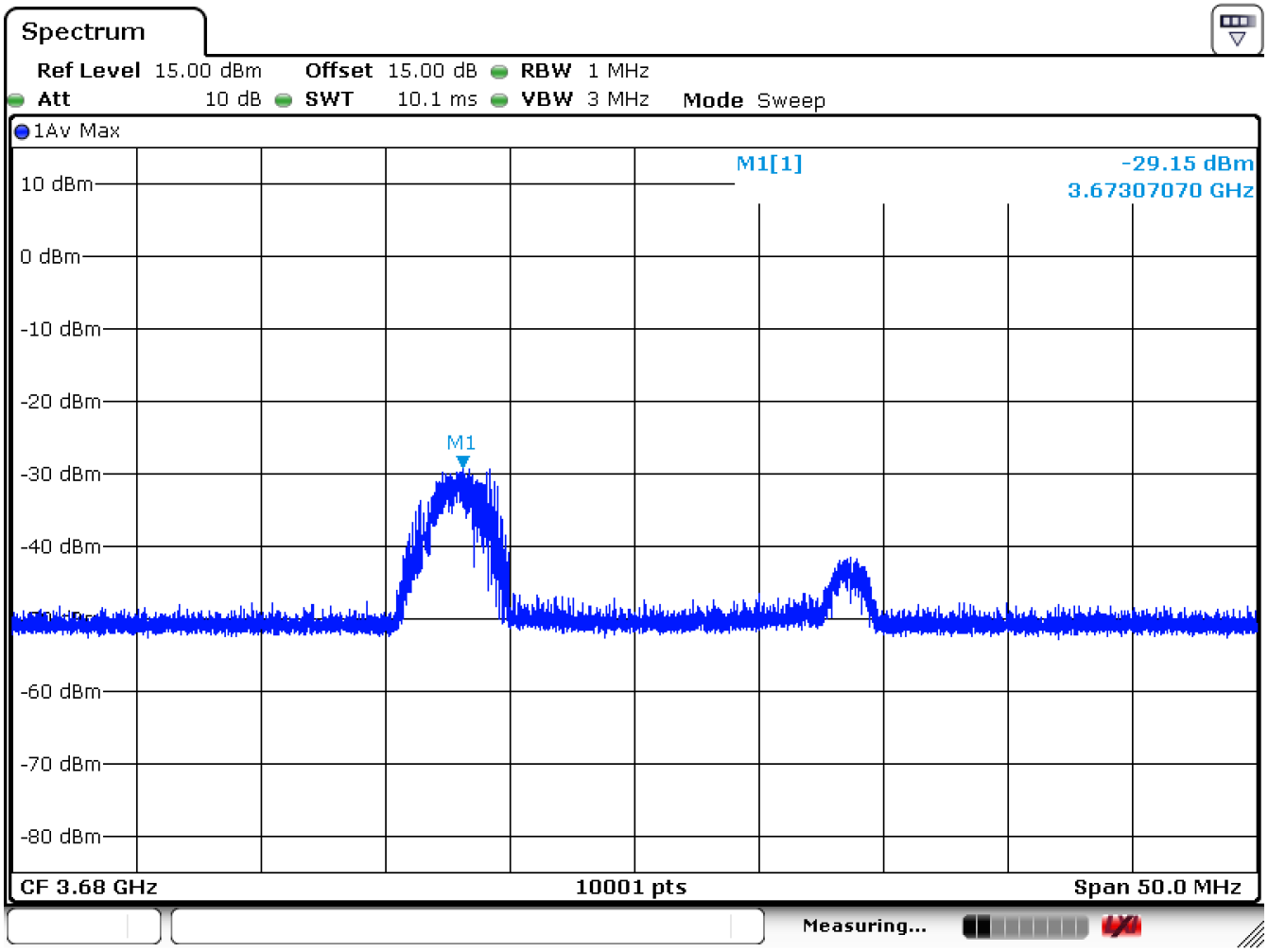

[Step 8.a.] After changing the frequency and power level,

The module (EUT) discontinues operations, change frequencies, or change its operational power level within 10 seconds of receiving instructions from its associated CBSD. Test result is PASS.

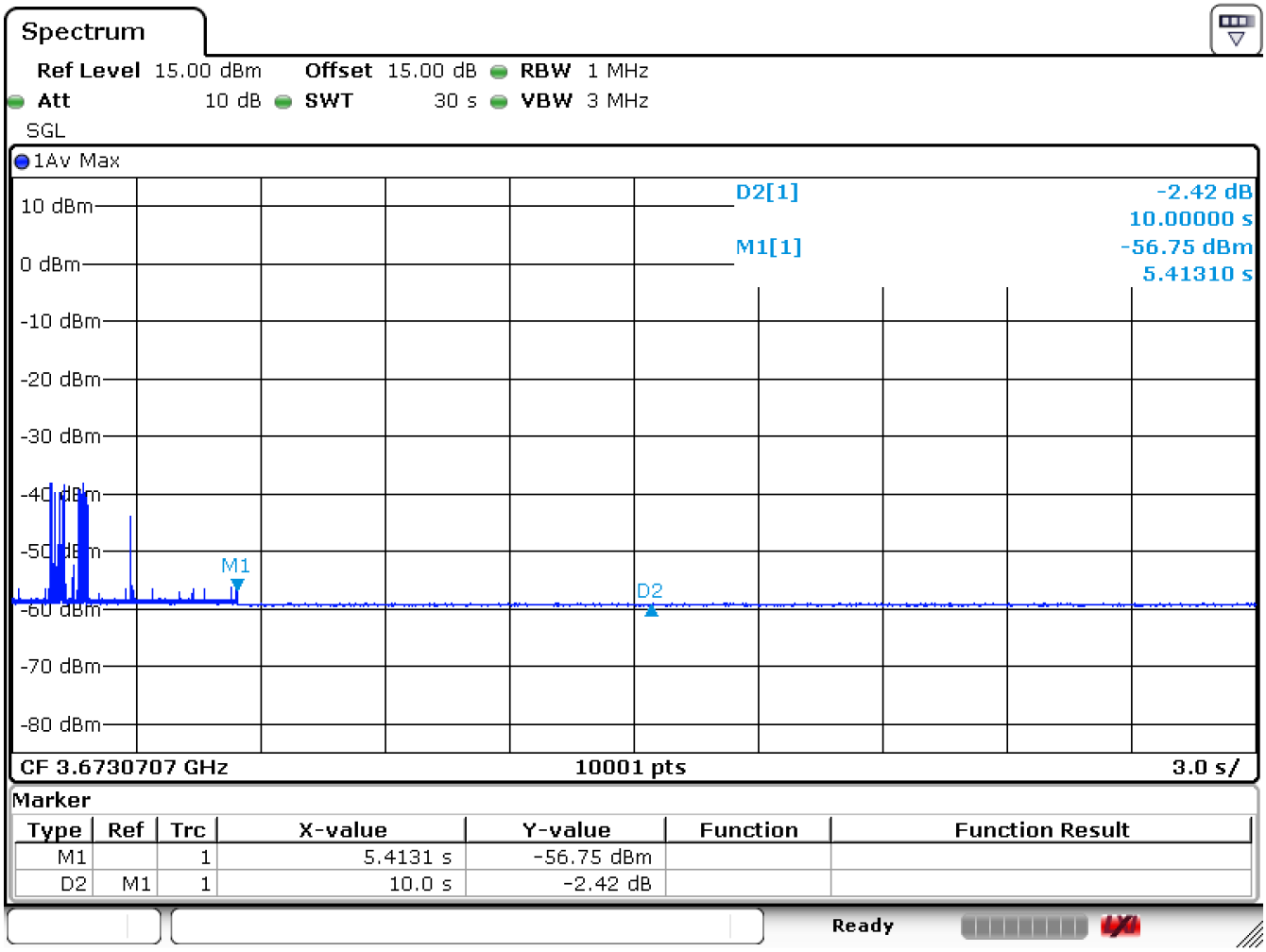

# 4 List of Measuring Equipment

| Instrument | Manufacturer | Model No. | Serial No. | Characteristics | Calibration Date | Test Date | Due Date | Remark |
|---|---|---|---|---|---|---|---|---|
| Spectrum Analyzer | R&S | FSV7 | 101472 | 10Hz~7GHz | Jan. 08, 2020 | Sep. 23, 2020 | Jan. 07, 2021 | DFS01-KS |

# Appendix A Test Setup Photo

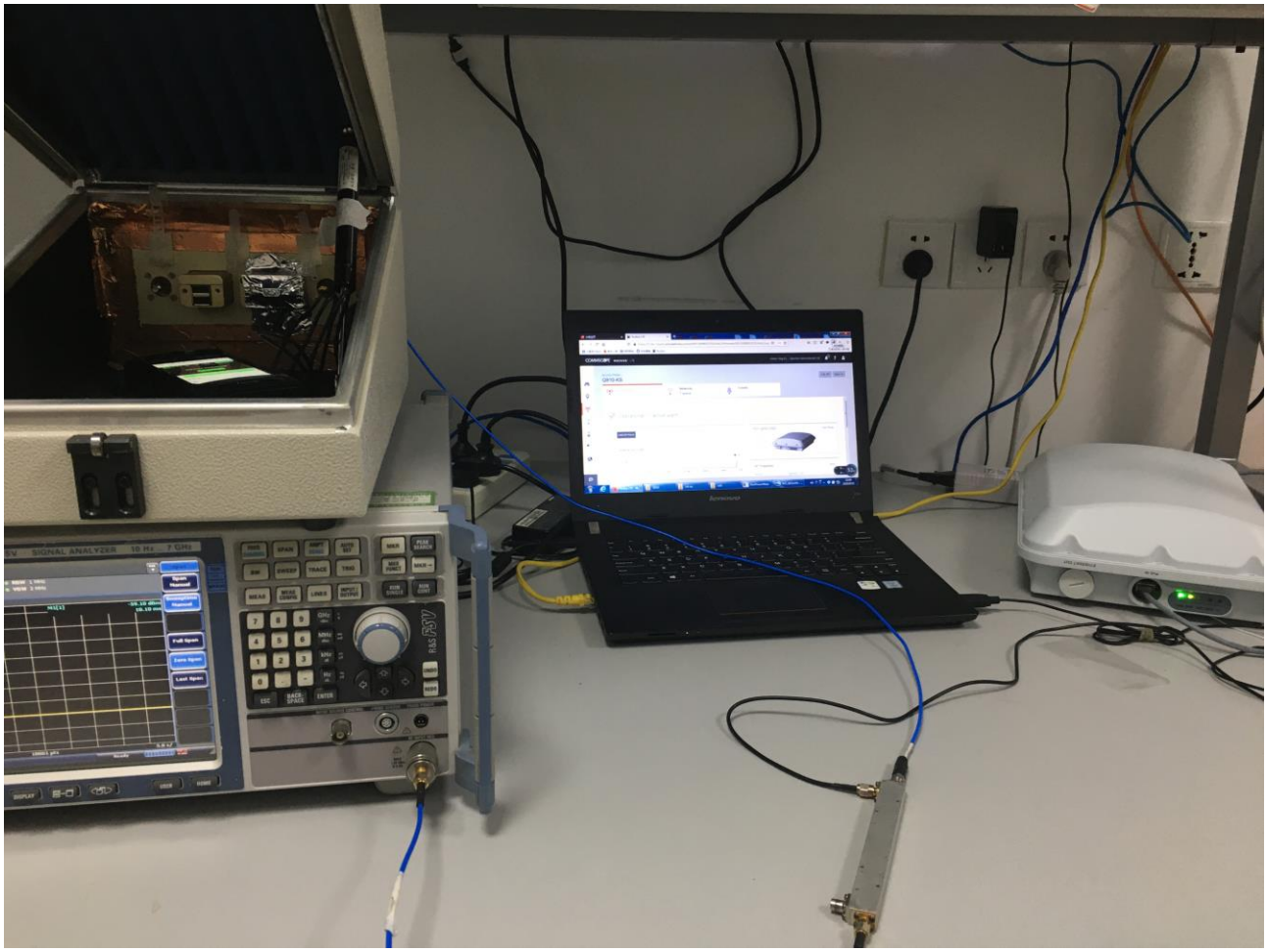

———THE END———