MOTOROLA SOLUTIONS

VB400 BODY-WORN CAMERA

QUICKSTART GUIDE

TABLE OF CONTENTS

INTRODUCTION **3**
HOW TO CHARGE YOUR VB400 ..... **4**
CHARGING WITH A 1-PORT DOCK 5
CHARGING WITH A 14-PORT DOCK 6
BATTERY STATUS LED 7
CONFIGURING YOUR VB400 ..... **8**
IDENTIFYING AN RFID ASSIGNED VB400 ..... **9**
USING YOUR VB400 ..... **10**
TO START / STOP RECORDING 10
WEARING YOUR VB400 ..... **12**
ACCESSORIES **13**
REGULATORY INFORMATION **14**

INTRODUCTION

Thank you for choosing the VB400 Body-worn camera. This simple guide will lead you through the set up and use of your VB400.

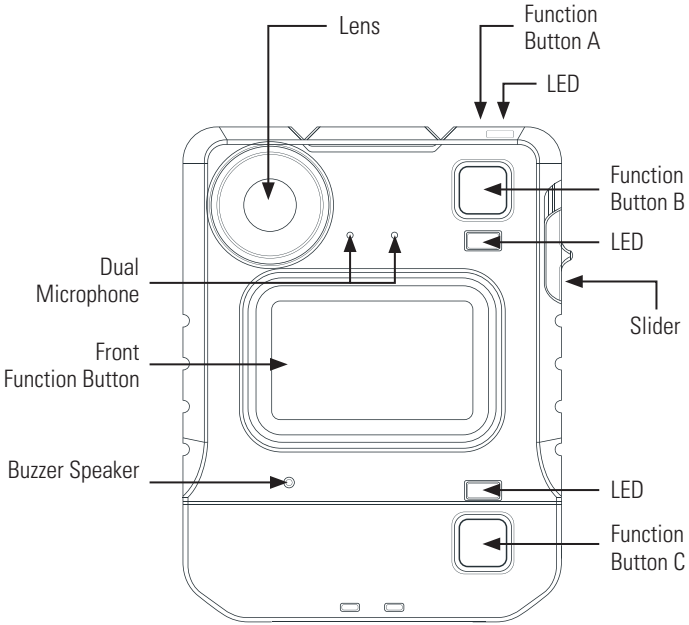

HOW TO CHARGE YOUR VB400

Upon receiving your VB400, it is recommended that you fully charge the device before usage.

When charging using a 1-Port Dock or 14-Port Dock, insert the camera into the slots as shown below, ensuring the camera clicks securely in place. Check that the top LED blinks green to indicate charging.

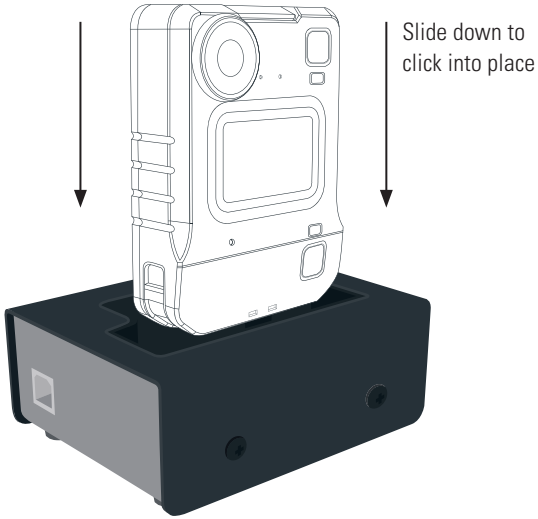

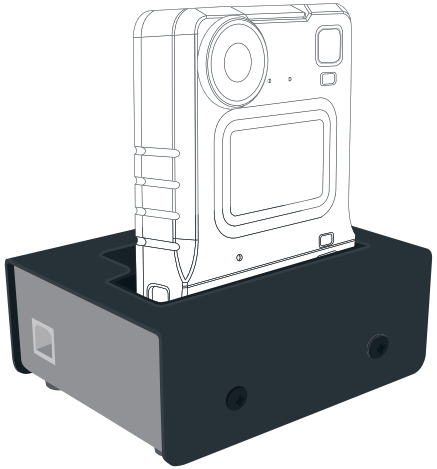

CHARGING WITH A 1-PORT DOCK (VB-400-DOCK-SOLO)

Connected to your laptop or DockController.

If you are charging your VB400 camera via a 1-Port Dock (VB-400-DOCK-SOLO) your camera will bleep to indicate charging has commenced, and the LED, as indicated, will flash green to show charging.

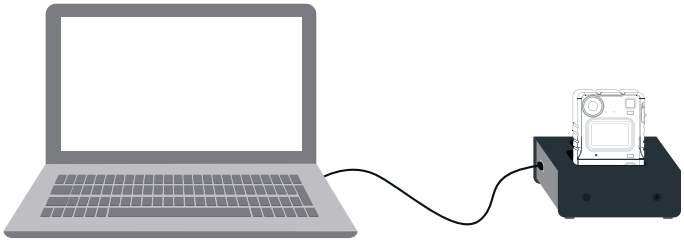

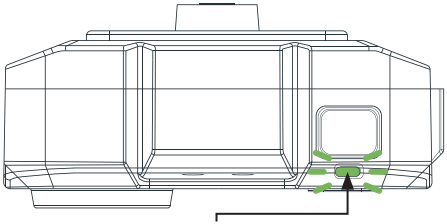

Charging: Flashing **green** LED

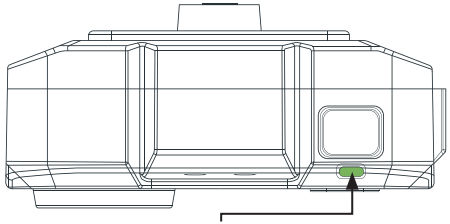

Fully Charged: Solid **green** LED

Once fully charged, the same LED will turn solid green. If the LED is not lit, the device is not charging. Your VB400 will be fully charged within 8 hours from a flat battery.

CHARGING WITH A 14-PORT DOCK (VB-400-DOCK-14/US)

Connected to a power supply and DockController

If you are charging your VB400 camera via a 14-Port Dock (VB-400-DOCK-14/US) the top LED will flash green to show charging, and the camera will bleep when successfully connected to VideoManager.

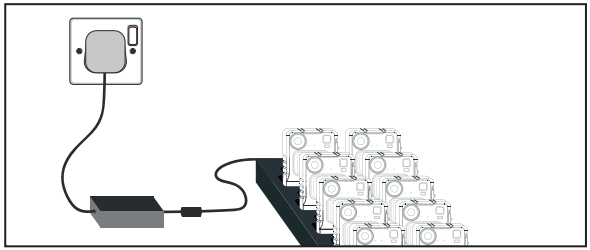

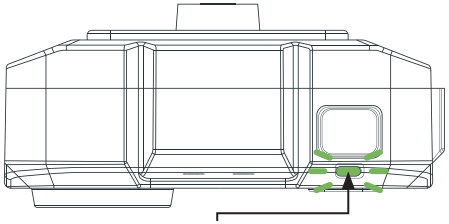

Charging: Flashing **green** LED

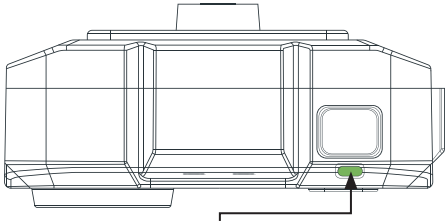

Fully Charged: Solid **green** LED

Once fully charged, the same LED will turn solid green. If the LED is not lit, the device is not charging. Your VB400 will be fully charged within 8 hours from a flat battery.

BATTERY STATUS LED

To quickly understand the current battery status of your VB400, press the bottom button on the front face of the camera and refer to the bottom LED.

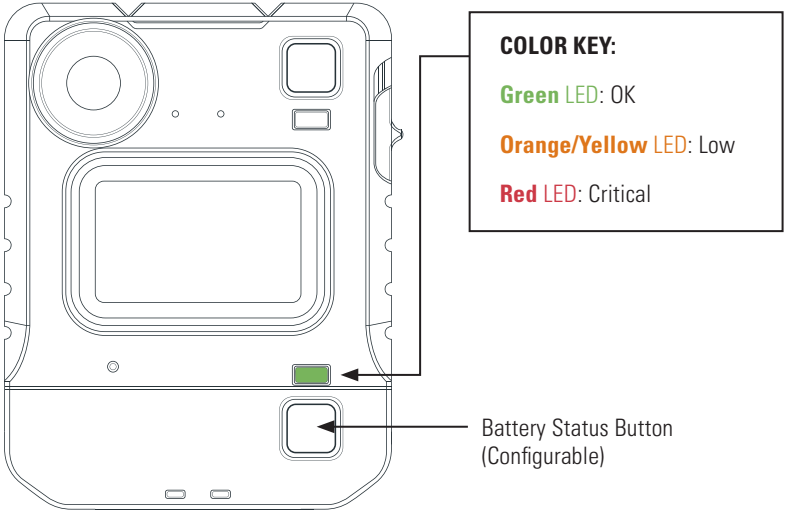

CONFIGURING YOUR VB400

Prior to using your VB400, your device must be configured and assigned to you using VideoManager. For detailed information on how to configure your device, please refer to the VideoManager User Guide.

Each VB400 requires a valid VideoManager Licence, in order for you to assign devices and access footage. For further details, see the VideoManager User Guide.

To ascertain whether your VB400 has been configured, please view the top LED on your device. This LED will turn solid green once configured and assigned. Your VB400 is charged, assigned and ready to use when the LEDs shown are both solid green.

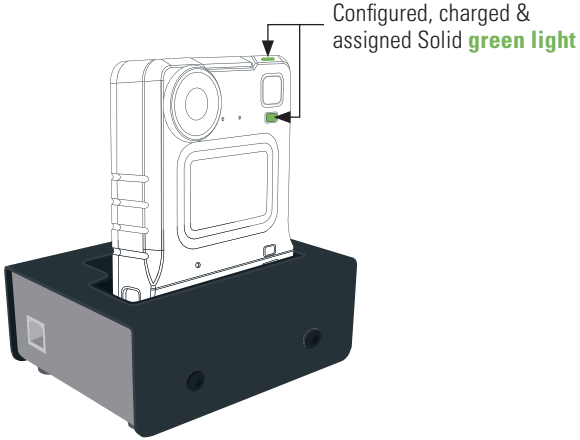

PLEASE NOTE: If you try to use your VB400 before it has been assigned, the bottom LED on the front face of the camera will start to flash red and you will hear an alarm tone. You will not be able to use your camera until it has been assigned.

IDENTIFYING AN RFID ASSIGNED VB400

Once your device is configured, your system administrator may wish camera users to utilize an RFID system for camera assignment. For further information on assigning VB400s using an RFID reader, please refer to the VideoManager User Guide.

Having presented your RFID card, your docked, assigned VB400 will identify itself with a solid red LED as shown.

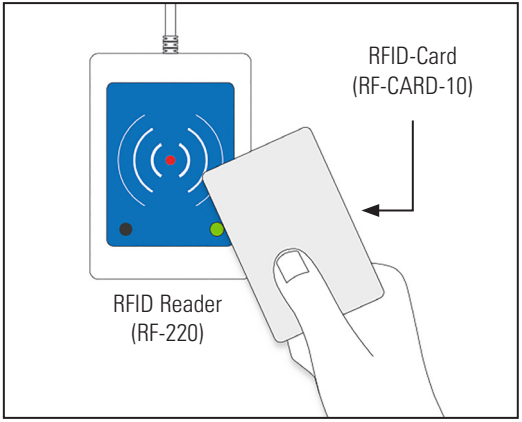

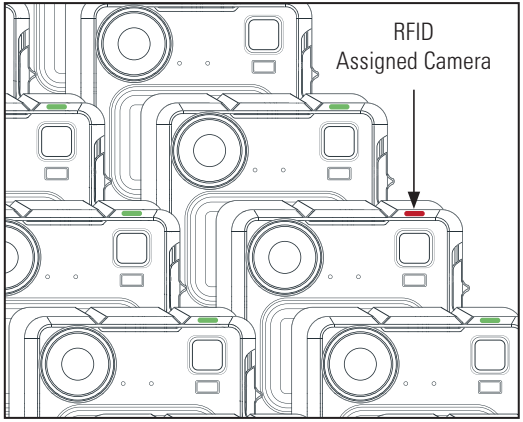

USING YOUR VB400

The VB400 series of cameras are intuitive and simple to use.

TO START / STOP RECORDING (CONFIGURABLE)

Users can activate recording by pressing on the single front button located in the center of the camera as shown. Recording is stopped by pressing and holding the front button.

Record activation and deactivation buttons are configurable by Administrators.

Start Recording initiated will be indicated by a short bleep, the two upper LEDs showing red.

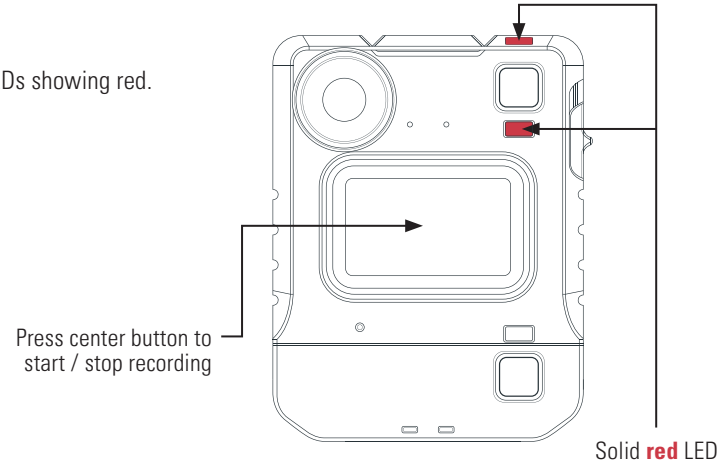

Stop Recording initiated is indicated by the two upper LEDs turning from red to off, accompanied by a longer, high pitched bleep.

PLEASE NOTE: All buttons are configurable. Please consult with your administrator if you have any issues.

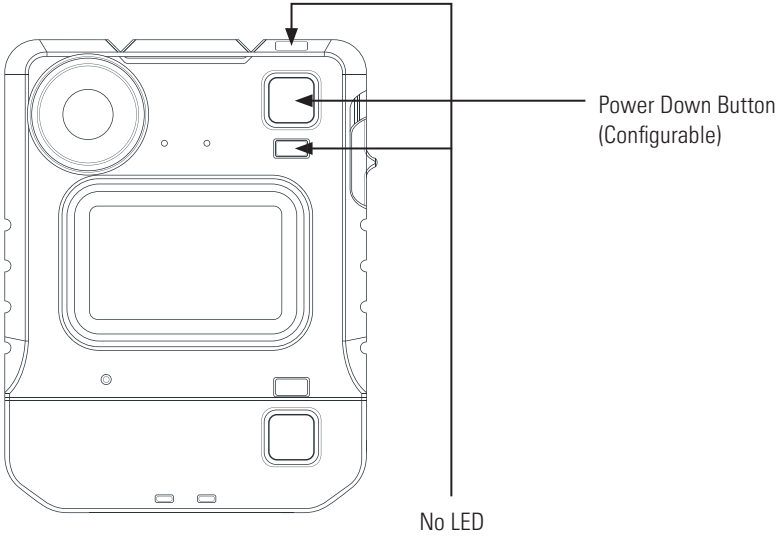

WEARING YOUR VB400

The VB400 body-worn camera should always remain upright when capturing footage.

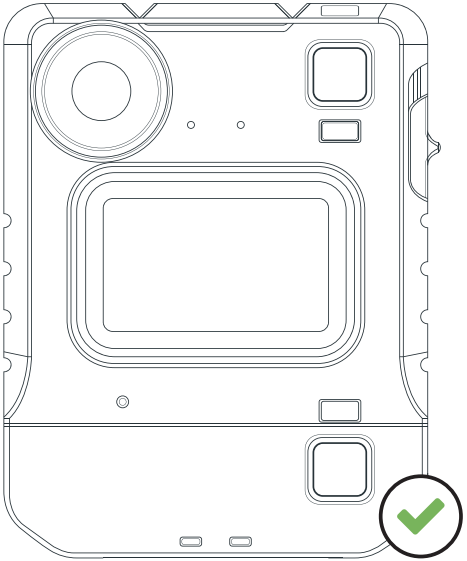

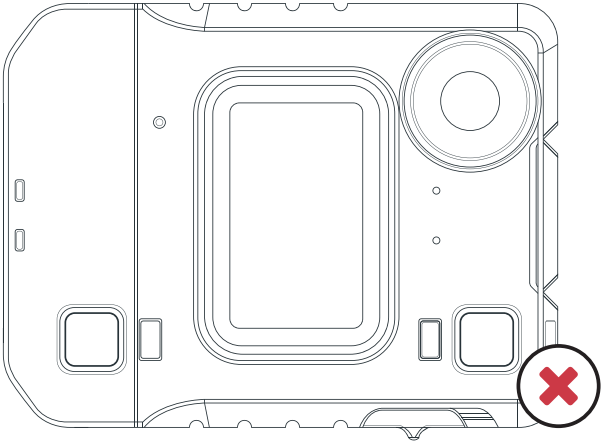

ACCESSORIES

Designed for optimum performance and comfort in a wide range of situations, the VB400 comes with a variety of fixing types to suit every uniform and body shape.

For more information on our range of body-worn cameras, please visit: **www.motorolasolutions.com/bwc**

REGULATORY INFORMATION

FCC

Responsible party
Name: Motorola Solutions, Inc.
Address: 2000 Progress Pkway, Schaumburg, Il. 60196
Phone Number: 1-800-927-2744
Hereby declares that the product:
Model Name: VB400
Conforms to the following regulations: FCC Part 15, subpart B, section 15.107(a), 15.107(d), and section 15.109(a)

This device complies with part 15 of the FCC Rules. Operation is subject to the following two conditions: (1) This device may not cause harmful interference, and (2) this device must accept any interference received, including interference that may cause undesired operation.

NOTE: This equipment has been tested and found to comply with the limits for a Class B digital device, pursuant to Part 15 of the FCC Rules. These limits are designed to provide reasonable protection against harmful interference in a residential installation. This equipment generates uses and can radiate radio frequency energy and, if not installed and used in accordance with the instructions, may cause harmful interference to radio communications. However, there is no guarantee that interference will not occur in a particular installation. If this equipment does cause harmful interference to radio or television reception, which can be determined by turning the equipment off and on, the user is encouraged to try to correct the interference by one of the following measures:

- Reorient or relocate the receiving antenna.
- Increase the separation between the equipment and receiver.
- Connect the equipment into an outlet on a circuit different from that to which the receiver is connected.
- Consult the dealer or an experienced radio/TV technician for help.

WARNING: Any changes or modifications not expressly approved by the party responsible for compliance could void the user's authority to operate this equipment.

The device must not be co-located or operating in conjunction with any other antenna or transmitter.

FCC RF EXPOSURE INFORMATION (SAR)

This device is designed and manufactured not to exceed the emission limits for exposure to radio frequency (RF) energy set by the Federal Communications Commission of the U.S. Government.
The exposure standard for wireless devices employs a unit of measurement known as the Specific Absorption Rate, or SAR. The SAR limit set by the FCC is 1.6 W/kg. Tests for SAR are conducted using standard operating positions accepted by the FCC with the device transmitting at its highest certified power level in all tested frequency bands. Although the SAR is determined at the highest certified power level, the actual SAR level of the device while operating can be well below the maximum value. This is because the device is designed to operate at multiple power levels so as to use only the poser required to reach the network. In general, the closer you are to a wireless base station antenna, the lower the power output. While there may be differences between the SAR levels of various devices and at various positions, they all meet the government requirement.

INDUSTRY CANADA STATEMENT

This device complies with RSS247 of Industry Canada. Cet appareil se conforme à RSS247 de Canada d'Industrie. This device complies with Industry Canada license-exempt RSS standard(s). Operation is subject to the following two conditions: (1) this device may not cause interference, and (2) this device must accept any interference, including interference that may cause undesired operation of the device. appareils radio exempts de licence. Son fonctionnement est sujet aux deux conditions suivantes: (1) le dispositif ne doit pas produire de brouillage prejudiciable, et (2) ce dispositif doit accepter tout brouillage recu, y compris un brouillage susceptible de provoquer un fonctionnement indesirable. The device must not be co-located or operating in conjunction with any other antenna or transmitter.

CAUTION:

(i) the device for operation in the band 5150-5250 MHz is only for indoor use to reduce the potential for harmful interference to co-channel mobile satellite systems;
(ii) the maximum antenna gain permitted for devices in the bands 5250-5350 MHz and 5470-5725 MHz shall be such that the equipment complies with the e.i.r.p. limit;
(iii) the maximum antenna gain permitted for devices in the band 5275-5850 MHz shall be such that the equipment still complies with the e.i.r.p. limits specified for point-to-point and non-point-to-point operation as appropriate; and
(iv) the worst-case tilt angle(s) necessary to remain compliant with the e.i.r.p. elevation mask requirement set forth in Section 6.2.2(3) shall be clearly indicated.
(v) Users should also be advised that high-power radars are allocated as primary users (i.e. priority users) of the bands 5250-5350 MHz and 5650-5850 MHz and that these radars could cause interference and/or damage to LE-LAN devices.

EXPOSURE OF HUMANS TO RF FIELDS (RSS-102)

The radiated energy from the antennas connected to the wireless adapters conforms to the IC limit of the RF exposure requirement regarding IC RSS102, Issue 5 clause 4. SAR tests are conducted using recommended operating positions accepted by the RSS with the device transmitting at its highest certified power level in all tested frequency band without distance attaching away from the body.

CONFORMITÉ DES APPAREILS DE RADIOCOMMUNICATION AUX LIMITES D'EXPOSITION HUMAINE AUX RADIOFRÉQUENCES (CNR-102)

L'énergie émise par les antennes reliées aux cartes sans fil respecte la limite d'exposition aux radiofréquences telle que définie par Industrie Canada dans la clause 4.1 du document CNR-102, version 5. Tests DAS sont effectués en utilisant les positions recommandées par la CNR avec le téléphone émet à la puissance certifiée maximale dans toutes les bandes de fréquences testées sans distance attacher loin du corps.

FOR COUNTRY CODE SELECTION USAGE (WLAN DEVICES)

NOTE: The product does not have a country code selection feature. Per FCC regulations, all Wi-Fi products marketed in US must be fixed to US operation channels only.

1. Warning: For acceptance of the external DC source shall comply with ES1, PS2 requirements.
2. WARNING: The batteries shall not be exposed to excessive heat such as sunshine, fire or the like.
3. CAUTION: Danger of explosion if the battery is incorrectly replaced. Replace only with the same or equivalent type. The apparatus shall be used Battery disposal information The battery used with this product contains chemicals that are harmful to the environment.
4. To preserve our environment, dispose of the battery according to your local laws and regulations.
5. Do not dispose of the battery with normal household waste,
6. For more information, please contact the local authority or the retailer where you purchased the product.

RECYCLING

This product bears the selective sorting symbol for Waste electrical and electronic equipment (WEEE). This means that this product must be handled pursuant to European directive 2012/19/EU in order to be recycled or dismantled to minimize its impact on the environment. User has the choice to give his product to a competent recycling organization or to the retailer when he buys a new electrical or electronic equipment.

For more information, please visit: **www.motorolasolutions.com/BWC**

Motorola Solutions, Inc. 500 West Monroe Street, Chicago, IL 60661, U.S.A. 800-367-2346

Availability is subject to individual country law and regulations. All specifications shown are typical unless otherwise stated and are subject to change without notice. MOTOROLA, MOTO, MOTOROLA SOLUTIONS and the Stylized M Logo are trademarks or registered trademarks of Motorola Trademark Holdings, LLC and are used under license. All other trademarks are the property of their respective owners.
© 2020 Motorola Solutions, Inc. All rights reserved. (08/20) (ED-006-021-13-US)

MOTOROLA SOLUTIONS