EXHIBIT 9

Internal Photographs

(Pursuant to FCC Part 2.1033(b)(7), 2.1033(c)(12) and RSP 100 Annex C)

The following photographs are attached.	Exhibit
1. RF board with Shields (Top) Non-TIA4950	9A
2. RF board without Shields (Top) Non-TIA4950	9B
3. RF board with Shields (Top) TIA4950	9C
4. RF board without Shields (Top) TIA4950	9D
5. RF board with Shields (Bottom) Non-TIA4950	9E
6. RF board without Shields (Bottom) Non-TIA4950	9F
7. RF board with Shields (Bottom) TIA4950	9G
8. RF board without Shields (Bottom) TIA4950	9H
9. RF boards with chassis and housing (Front Side) LKP Non-TIA4950	9I
10. Chassis and Housing (Back Side) LKP Non-TIA4950	9J
11. RF boards with chassis and housing (Front Side) LKP TIA4950	9K
12. Chassis and housing (Back Side) LKP TIA4950	9L
13. RF boards with chassis and housing (Front Side) NKP Non-TIA4950	9M
14. Chassis and housing (Back Side) NKP Non-TIA4950	9N
15. RF boards with chassis and housing (Front Side) NKP TIA4950	9O
16. Chassis and housing (Back Side) NKP TIA4950	9P
17. Limited Keypad Board (Top)	9Q
18. Limited Keypad Board (Bottom)	9R

Exhibit 9A

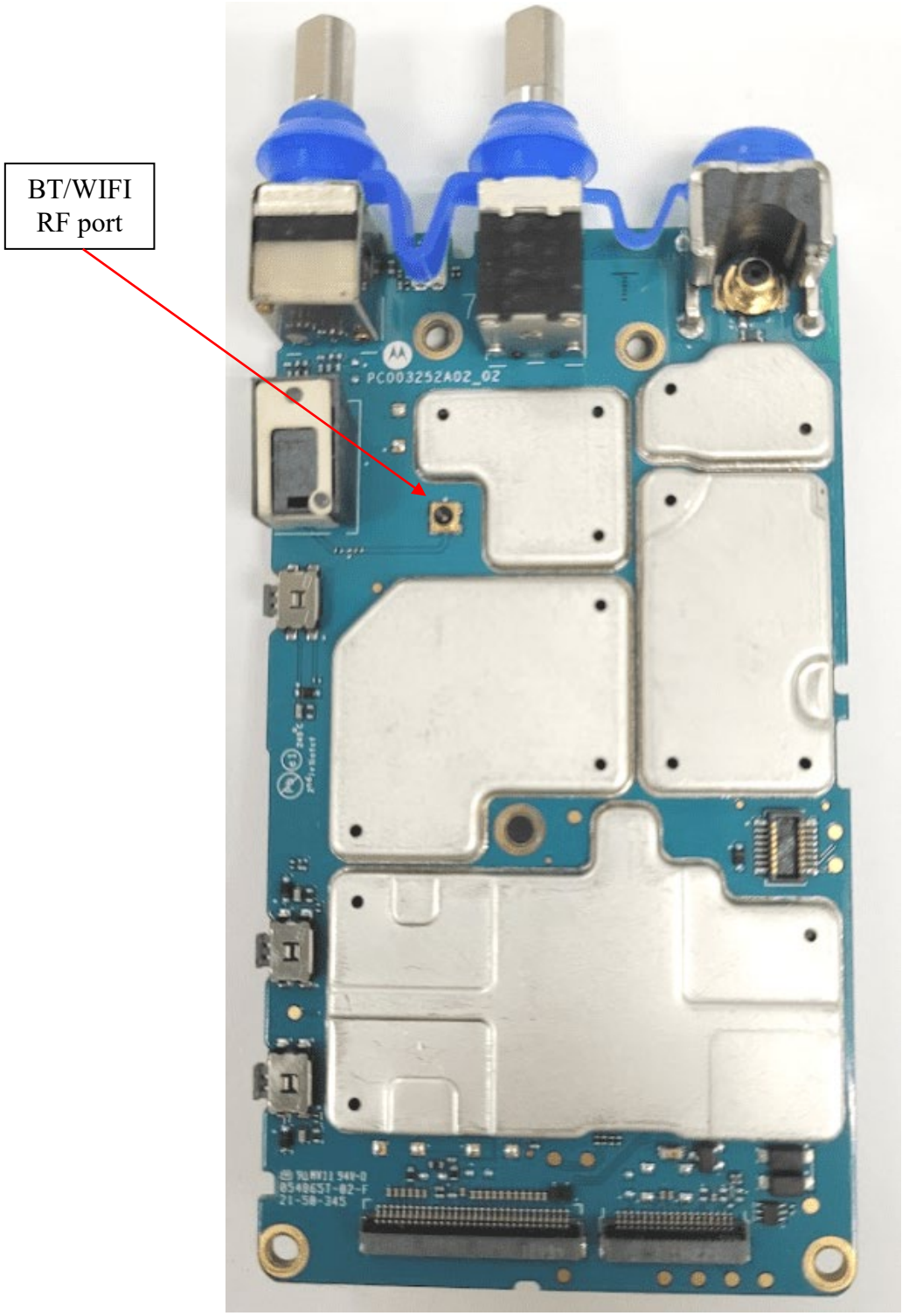

RF board with Shields (Top) Non-TIA4950

Exhibit 9B

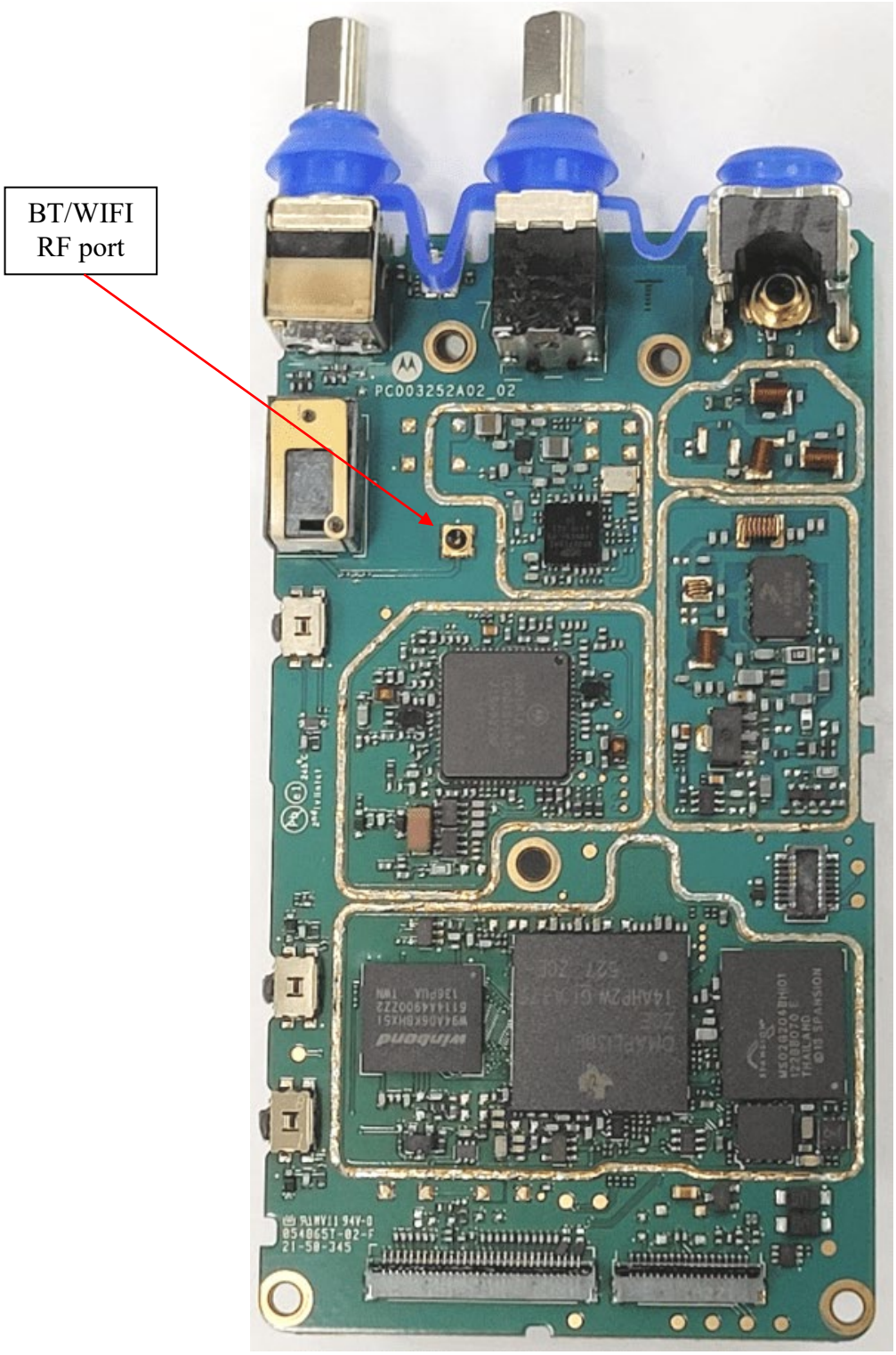

RF board without Shields (Top) Non-TIA4950

Exhibit 9C

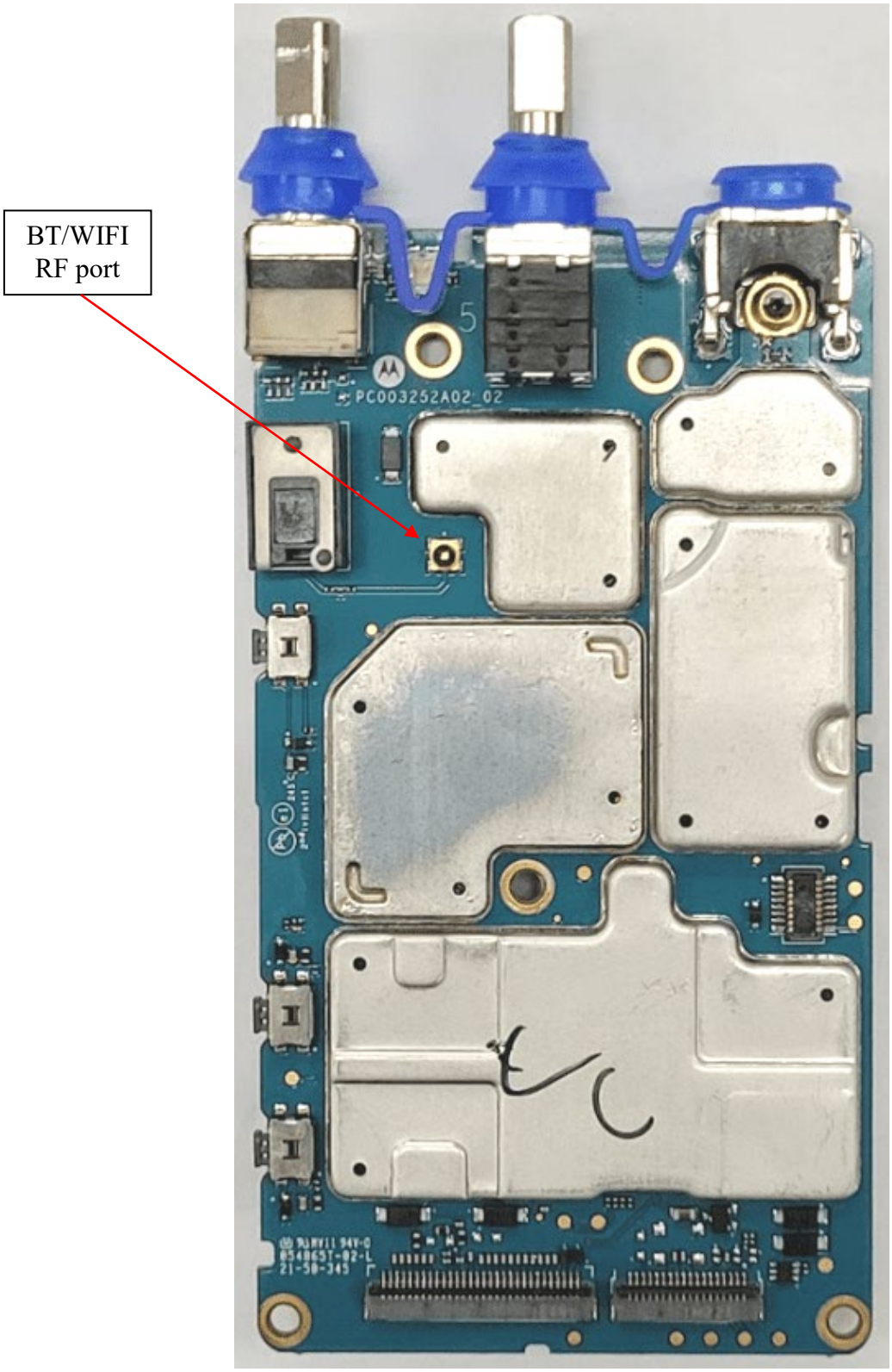

RF board with Shields (Top) TIA4950

Exhibit 9D

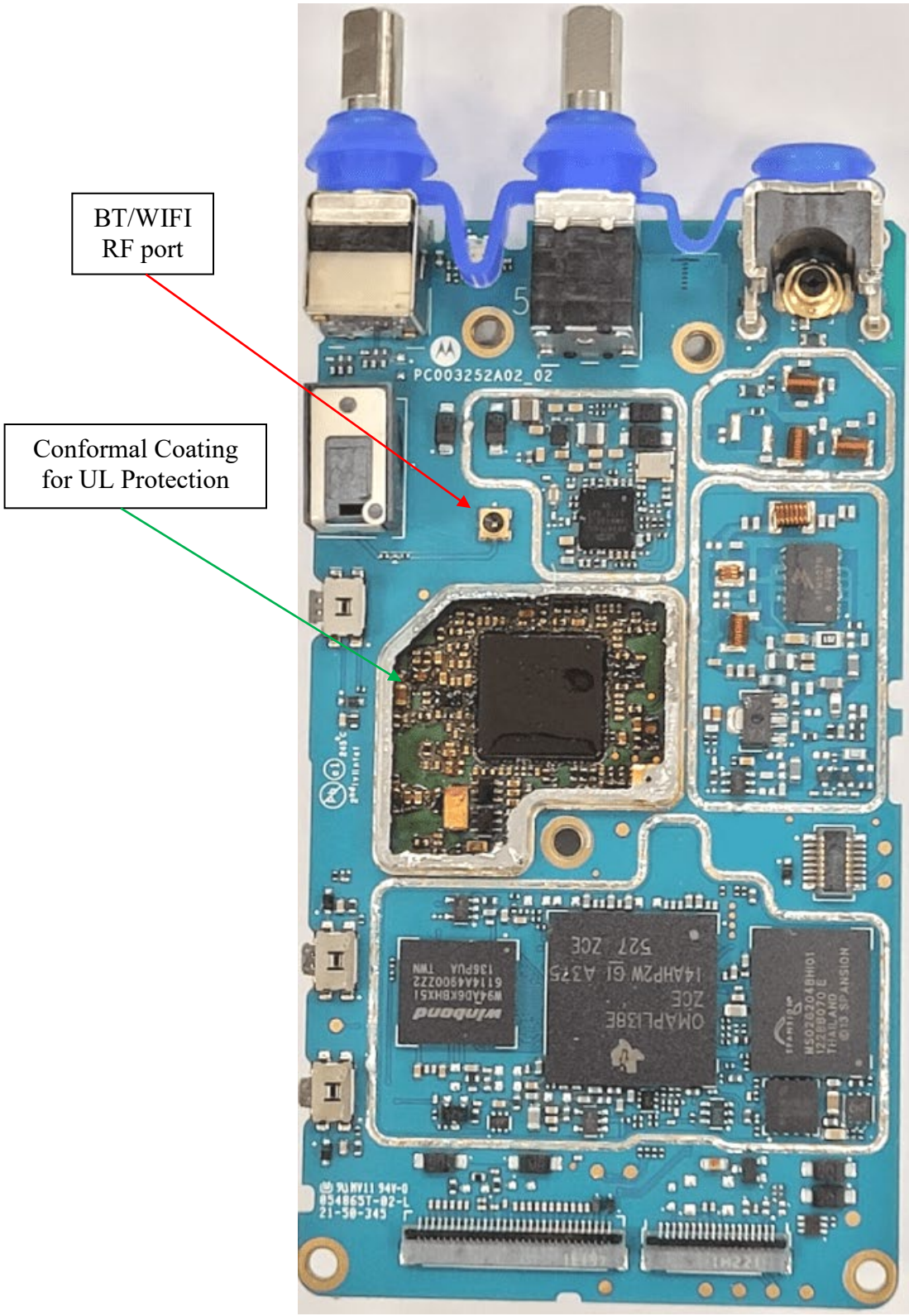

RF board without Shields (Top) TIA4950

Exhibit 9E

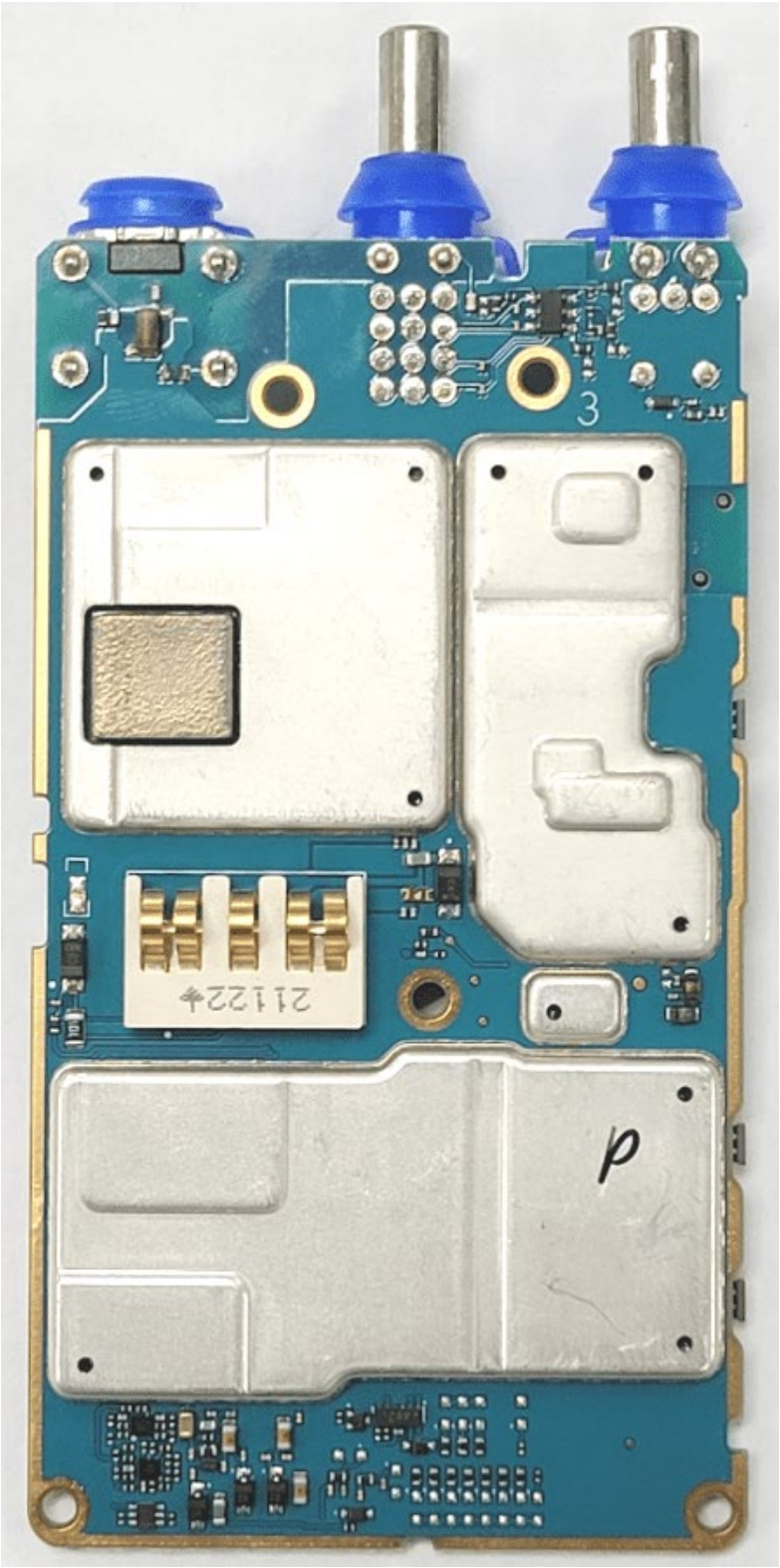

RF board <u>with</u> Shields (Bottom) Non-TIA4950

Exhibit 9F

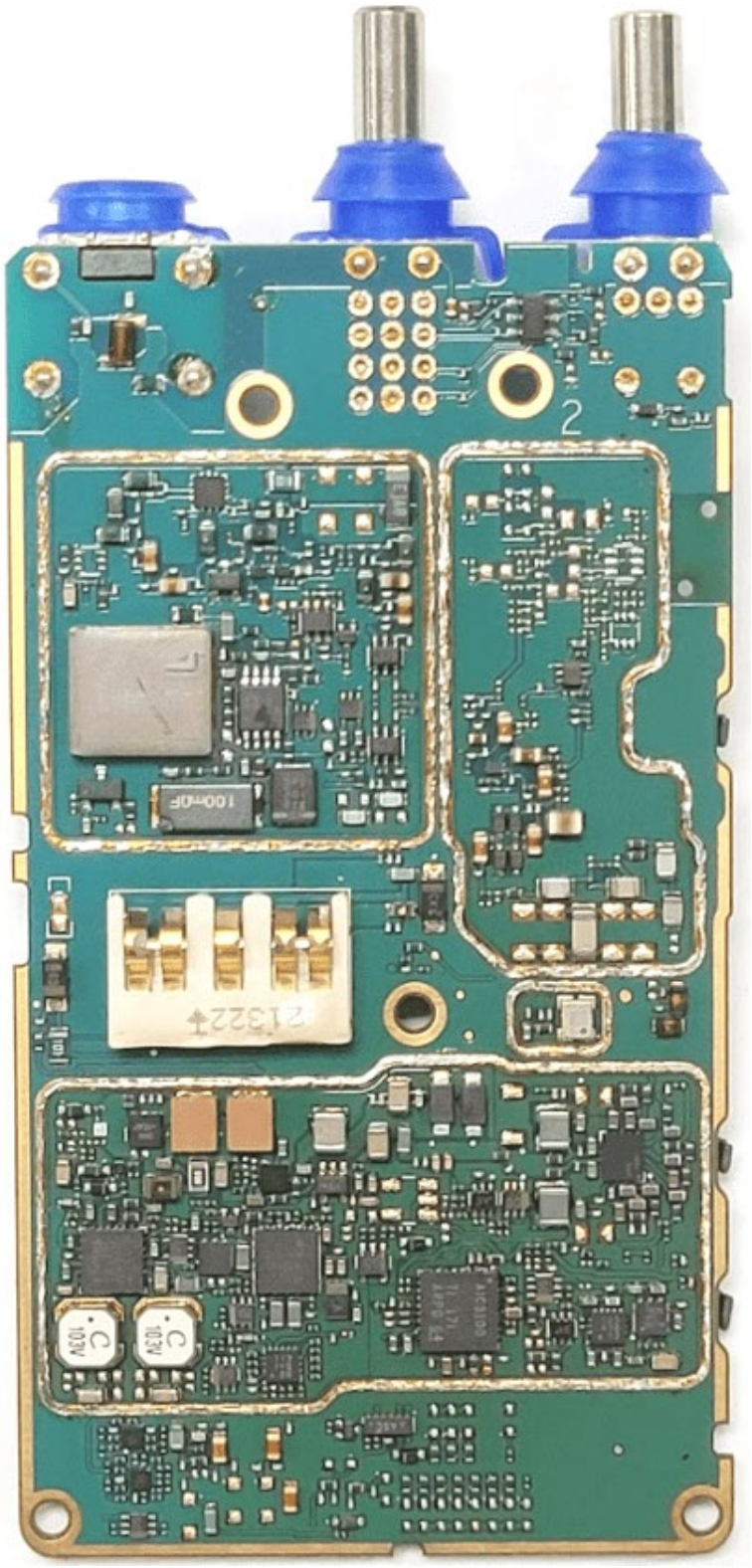

RF board without Shields (Bottom) Non-TIA4950

Exhibit 9G

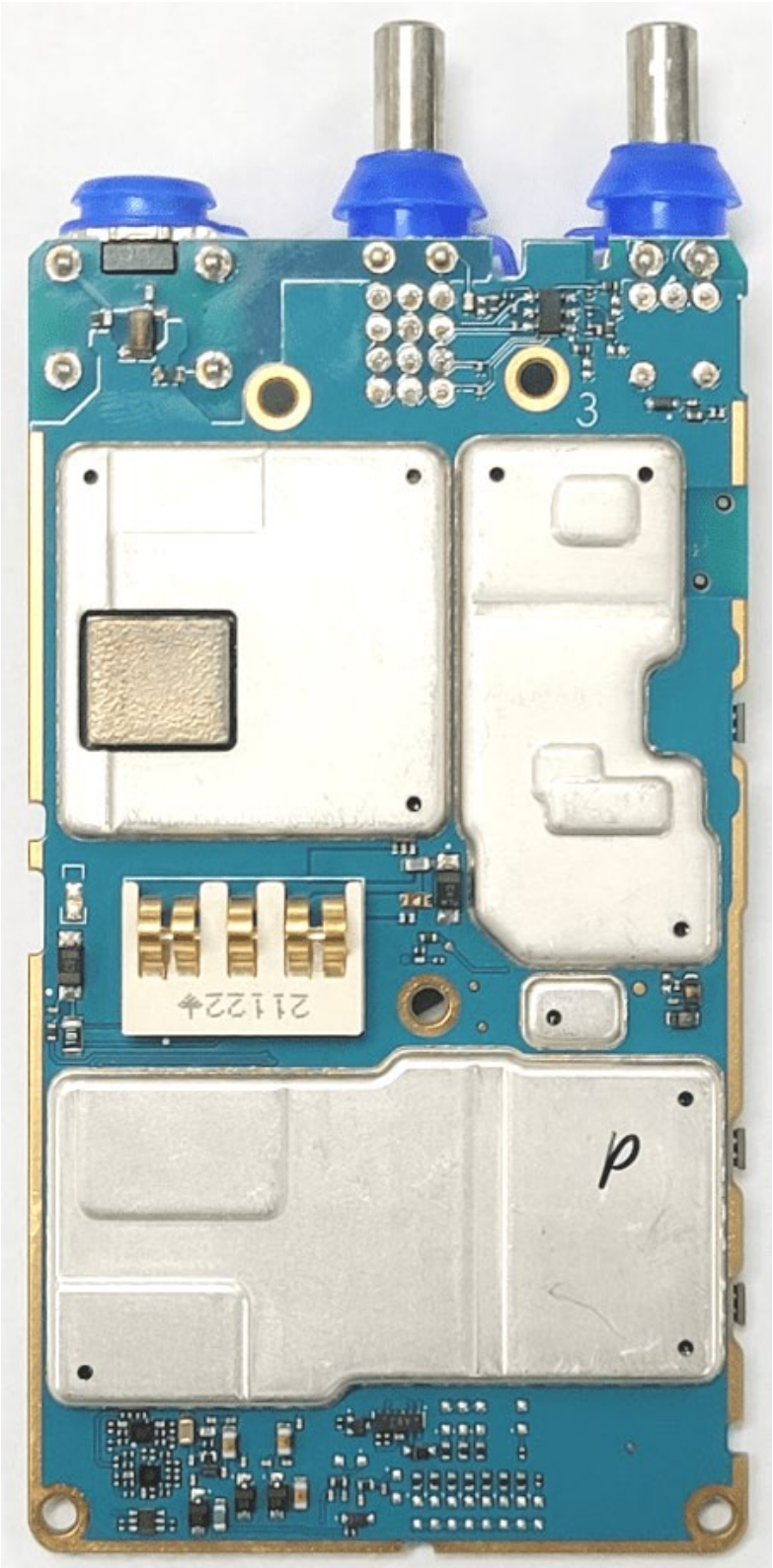

RF board with Shields (Bottom) TIA4950

Exhibit 9H

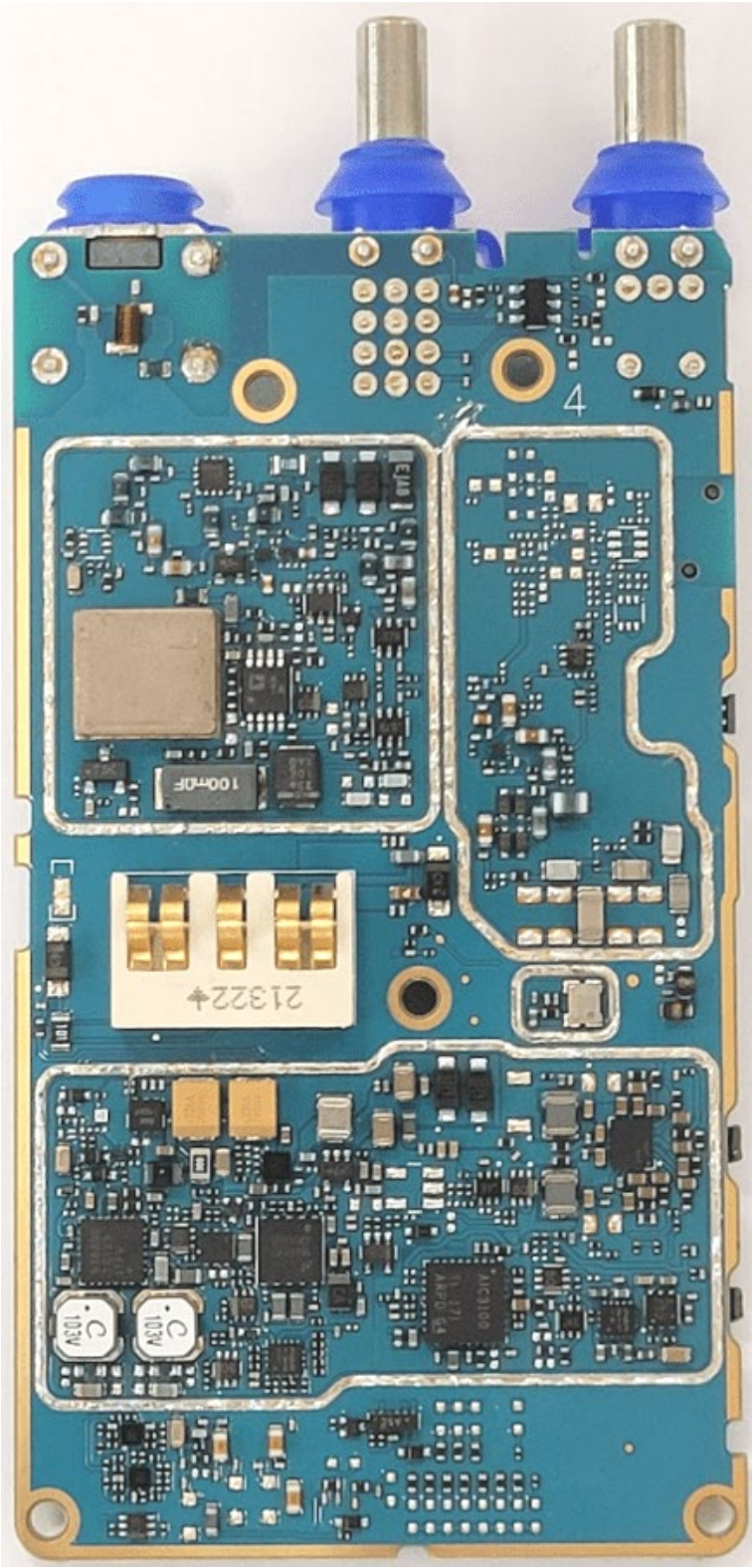

RF board without Shields (Bottom) TIA4950

Exhibit 9I

RF boards with chassis and housing (Front Side) LKP Non-TIA4950

Exhibit 9J

Chassis and housing (Back Side) LKP Non-TIA4950

Exhibit 9K

RF boards <u>with</u> chassis and housing (Front Side) LKP TIA4950

Exhibit 9L

Chassis and housing (Back Side) LKP TIA4950

Exhibit 9M

RF boards with chassis and housing (Front Side) NKP Non-TIA4950

Exhibit 9N

Chassis and housing (Back Side) NKP Non-TIA4950

Exhibit 9O

RF boards with chassis and housing (Front Side) NKP TIA4950

Exhibit 9P

Chassis and housing (Back Side) NKP TIA4950

Exhibit 9Q

Limited Keypad Board (Top)

Exhibit 9R

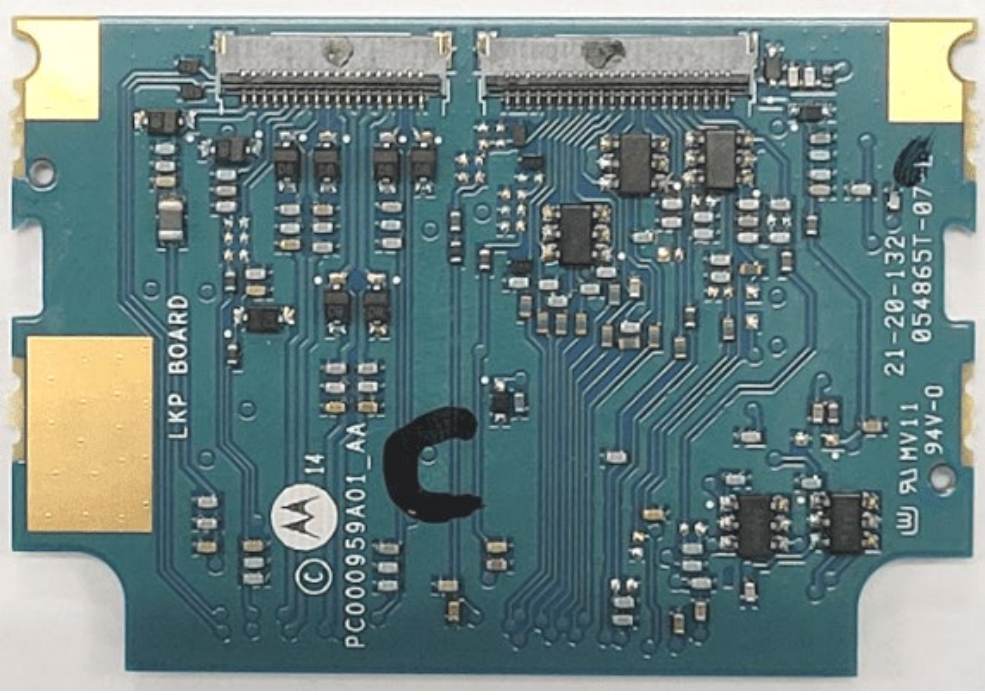

Limited Keypad Board (Bottom)

***** END *****