MOTOROLA SOLUTIONS

CERTIFICATE 2518.08

MS ISO/IEC 17025
TESTING
SAMM NO. 0825

MOTOROLA PENANG ADV. COMM. LABORATORY
Motorola Solutions Malaysia SDN BHD,
Plot 2A, Medan Bayan Lepas,
Mukim 12 S.W.D, 11900 Bayan Lepas,
Penang, Malaysia.

FCC/ISED TEST REPORT
Report Revision : Rev.A

Date/s Tested	:	19-October-2022 to 20-October-2022
Report Issue Date	:	21-October-2022
Manufacturer	:	Motorola Solutions Malaysia SDN BHD
Manufacturer Address	:	Plot 2A, Medan Bayan Lepas, Mukim 12 SWD, 11900 Bayan Lepas, Penang, Malaysia
Requestor	:	CHEW LOOI WONG
Product Type	:	Mobile
Product Version (PMN)	:	XPR 5550e
Model Number (HVIN)	:	AAM28JQN9RA1AN-1 (IC MODEL: PMUD3525ABUNWA)
Frequency Band	:	136-174MHz
Max RF Output Power	:	54 Watts
Applicant Name	:	Motorola Solutions Inc
Applicant Address	:	8000 West Sunrise Boulevard, Fort Lauderdale, Florida 33322
ISED Registrations	:	MY0001
FCC Registrations	:	461337
Firmware Version (FVIN)	:	D02.22.02.3002

The equipment was tested accordance to the requirement listed below:

(LMR)
FCC 47 CFR Part 22/ 74/ 90 **PASS**
ISED RSS- Gen Issue 5 / 119 Issue 12

This report shall not be reproduced without written approval from an officially designated representative of the Motorola Penang Adv. Comm. Laboratory. The results and statements contained in this report pertain only to the device(s) evaluated.

Prepared By:

AZIL EZZADDIN KHALIL
Test Personnel

Approved Signatory:

SOON OI MAY
Responsible Engineer

Table of Contents

Report Revision History 3
1.0 General Information 4
2.0 Summary of Test Results 5
3.0 Measurement Uncertainty 6
4.0 Equipment List 7
5.0 Test Condition 8
5.1. Transmitter Test Conditions 8
6.0 Transmitter Test Parameters 9
6.1. RF Output Power 9
6.1.1. Test Setup 9
6.1.2. Test Result 9
6.2. Frequency Stability 10
6.2.1. Test Setup 10
6.2.2. Test Result 10
6.2.3. Test Limit 10
6.3. Modulation Characteristics 11
6.3.1. Test Setup 11
6.3.2. Test Result 11
6.3.3. Test Limit 11
6.4. Modulation Limiting 12
6.4.1. Test Setup 12
6.4.2. Test Result 12
6.4.3. Test Limit 12
6.5. Occupied Bandwidth 13
6.5.1. Test Setup (Analog) 13
6.5.2. Test Result (Analog) 13
6.5.3. Test Setup (Digital) 14
6.5.4. Test Result (Digital) 14
6.5.5. Test Limit 14
6.6. Band Edge Conducted Spurious Emission (Part 22) 15
6.6.1. Test Setup (Analog) 15
6.6.2. Test Result (Analog) 15
6.6.3. Test Setup (Digital) 16
6.6.4. Test Result (Digital) 16
6.6.5. Test Limit 16
6.7. Transient Frequency Behavior 17
6.7.1. Test Setup 17
6.7.2. Test Result 17
6.7.3. Test Limit 18
6.8. Adjacent Channel Power 19
6.8.1. Test Setup (Analog) 19

6.8.2. Test Result 19
6.8.3. Test Setup (Digital) 20
6.8.4. Test Result 20
6.8.5. Test Limit 21
6.9. Conducted Spurious Emission 23
6.9.1. Test Setup 23
6.9.2. Test Result (Analog) 24
6.9.3. Test Result (Digital) 24
6.9.4. Test Limit 24
6.10. Radiated Spurious Emission 25
6.10.1. Test Setup 25
6.10.2. Test Result (Analog) 26
6.10.3. Test Result (Digital) 29
6.11. Effective Radiated Power (ERP) 32
6.11.1. Test Setup 32
6.11.2. Test Result 32
6.11.3. Test Limit 32
6.12. GNSS (EIRP for 1559 - 1610MHz) 33
6.12.1. Test Setup 33
6.12.1. Test Result 34
6.12.2. Test Limit 34

Report Revision History

Revision History	Description	Date	Originator
Rev. A	Initial Report	21-October-2022	Azil Ezzaddin Khalil

1.0 General Information

EUT Description:

Technologies	LMR, GNSS
Modulation Type	FM, 4FSK

The EUT contains following accessory devices and data cable:

Item	Brand	Model or P/N
IMPRES 4-WAY NAVIGATION KEYPAD MICROPHONE WITH ENHANCED AUDIO	MOTOROLA	RMN5127C
POWER CABLE TO BATTERY, 20-FOOT (6-METRE) CABLE, 20 AMP (1-45WATT)	MOTOROLA	HKN4192C

General Description of Applied Standards
The EUT is a RF Product. According to the specifications of the manufacturer, the EUT is to comply with the requirements of the following standards:

ANSI C63.26-2015

No modifications were done to the UUT to facilitate the tests in this report.

Deviation from standard
Not applicable as no deviation from standard test method

Antenna gain disclaimer
Antenna gain information is provided by customer. The validity of the results is dependent upon this information. The lab will not be held accountable in the event the supplied information affects compliance.

Test configuration of EUT
All relevant configurations involving radio models and accessories (including chargers, batteries, and antennas) were assessed. Only worst case configurations will be included in this report.

2.0 Summary of Test Results

FCC General Rules Part (47CFR)	ISED General Rules Part	Test Item	Result	Remarks	Serial number tested
2.1046(a), 22.565(f), 74.461, 80.215	RSS-119	RF Power Output	NA	See NOTE1&2	
2.1055, 22.355, 74.464, 80.209	RSS-119	Frequency Stability	NA	See NOTE1&2	
2.1047	-	Audio Frequency Response	NA	See NOTE1&2	
2.1047	-	Audio Low Pass Filter Response	NA	See NOTE1&2	
2.1047, 74.463, 80.213	-	Modulation limiting	NA	See NOTE1&2	
2.1049, 22.359, 90.21, 74.462, 80.211(b), (c)	RSS-119	Occupied Bandwidth	NA	See NOTE1&2	
2.1051, 22.359 (a), (b)	-	Band Edge Conducted Spurious Emission	NA	See NOTE1&2	
90.214	RSS-119	Transient Frequency Behavior	NA	See NOTE1&2	
90.543(a), (b)	RSS-119	Adjacent Channel Power	NA		
2.1051, 22.359, 90.210 74.462(c), 80.211(c)	RSS-119	Conducted Spurious Emissions	NA	See NOTE1&2	
90.210	RSS 119 (5.8)	Radiated Spurious Emission	Pass	Worst case Emission: -58.5052dBm (Noise floor) (margin: 38.5052dB)	511TYP0125
-	-	GNSS (EIRP for 1559 – 1610MHz)	NA		
-	-	Effective Radiated Power (ERP)	NA		

NA → **Not Applicable**

Note1: References data from FCC ID: AZ492FT7138/ IC: 109U-92FT7138.
Note2: The LMR section is identical to FCC ID: AZ492FT7138/ IC: 109U-92FT7138. Hence the conducted parameters will inherit from FCC ID: AZ492FT7138/ IC: 109U-92FT7138. Radiated parameter is repeated as sanity check for the depopulation of components in a different subsection circuitry. As per KDB 484596 D01v01, the applicant takes full responsibility that data referenced represents compliance to the relevant rules for this current FCC ID.

3.0 Measurement Uncertainty

Measurement	Frequency	Expended Uncertainty (k=1.96) (±)
AC Power Line Conducted Spurious Emission	150KHz ~ 30MHz	3.48 dB
Radiated Emissions up to 1 GHz dBµV/m (Field Strength)	30MHz~ 1000MHz	5.88 dB
Radiated Emissions above 1 GHz dBµV/m (Field Strength)	1GHz ~ 18GHz	5.84 dB
	18GHz ~ 40GHz	6.02 dB
Radiated Emissions dBm (ERP/EiRP)	30MHz ~ 18GHz	4.03 dB
Conducted Spurious Emissions	9kHz ~ 12.75GHz	2.82 dB
Frequency Stability	9kHz ~ 12.75GHz	0.0085 ppm
Audio Frequency Response / Low Pass Filter Response	300Hz – 20kHz	4.09 %
Modulation Limiting	300Hz – 3kHz	1.15 %
Occupied Bandwidth	9kHz~ 12.75GHz	2.82 dB
Band Edge Conducted Spurious Emission	9kHz ~ 12.75GHz	2.82 dB
Transient Frequency Behavior	9kHz~ 12.75GHz	5.4 ms
Adjacent Channel Power	9kHz~ 12.75GHz	2.82 dB

4.0 Equipment List

FCC Analog ATE#1:
Not Applicable

FCC Transient ATE #1:
Not Applicable

FCC CONDUCTED SPUR EMISSION ATE # 1:
Not Applicable

Radiated Emission Station:

DESCRIPTION	MODEL	SERIAL NUMBER	CALIBRATION DATE	CALIBRATION DUE DATE
DRG HORN FREQ.	SAS-571	720	06-Apr-21	06-Apr-23
DRG HORN FREQ.	SAS-571	1027	03-Jun-22	03-Jun-23
DC Power Supply	N7976A	MY53410110	30-Jun-22	30-Jun-23
SIGNAL GENERATOR	SMB 100A	182511	4-Jun-21	4-Jun-24
EMI TEST RECEIVER	ESW44	101751	24-Mar-22	24-Mar-23
5m SEMI-ANECHOIC CHAMBER	S800-HX	J2308	No Cal. Req'd	No Cal. Req'd
BILOG ANTENNA	CBL6112B	2863	22-Jun-22	22-Jun-23
BILOG ANTENNA	CBL6112D	30991	05-Oct-21	05-Jan-23
DATA LOGGER THERMOHYGROMETER	SDL500	A.016785	23-Jun-22	23-Jun-23
SYSTEM CONTROLLER	SC104V	050806-1	No Cal. Req'd	No Cal. Req'd
TURNTABLE FLUSH MOUNT 2M	FM2011	NA	No Cal. Req'd	No Cal. Req'd
ANTENNA POSITIONING TOWER	TLT2	NA	No Cal. Req'd	No Cal. Req'd
BROAD-BAND HORN ANTENNA	BBHA9170	BBHA9170255	18-Feb-22	18-Feb-23
PREAMPLIFIER 18-40GHz	BBV9721	9721-007	No Cal. Req'd	No Cal. Req'd
PREAMPLIFIER	PAM-0118P	361	11-Sep-20	11-Sep-23
LOOP ANTENNA	6502	00203479	10-Feb-22	10-Feb-23
TEST SOFTWARE	EMC_FCC_IC_BLUETOOTH_RE_TEST			
VERSION	EMC_FCC_RE_v1.6.4			

5.0 Test Condition

5.1. Transmitter Test Conditions

Test Item, (Channel Spacing)	Power (W)	Modulation	Test Frequency (MHz)	Tested By	Environmental conditions
RF Output Power	NA	NA	NA		
Frequency Stability	NA	NA	NA		
Audio Frequency Response (12.5kHz / 25kHz)	NA	NA	NA		
Audio Low Pass Filter Response (12.5kHz / 25kHz)	NA	NA	NA		
Modulation limiting (12.5kHz / 25kHz)	NA	NA	NA		
Occupied Bandwidth (12.5kHz / 20kHz / 25kHz)	NA	NA	NA		
Band Edge Conducted Spurious Emissions (Part 22) (12.5kHz / 20kHz / 25kHz)	NA	NA	NA		
Transient Frequency Behavior *(UHF & VHF Band)* (12.5kHz / 25kHz)	NA	NA	NA		
Adjacent Channel Power *(700MHz Band)* (12.5kHz / 25kHz)	NA	NA	NA		
Conducted Spurious Emissions- (12.5kHz / 25kHz)	NA	NA	NA		
Radiated Spurious Emission (12.5kHz & 25KhZ)	Low & Max	Analog & Digital	*158.5500 *161.7000	Nazrin&Qawiman	Temp(Deg): 23.8 Hum(%RH): 69.7
GNSS (EIRP for 1559 - 1610MHz) (12.5kHz / 25kHz)	NA	NA	NA		
Effective Radiated Power (ERP) (12.5kHz / 25kHz)	NA	NA	NA		

NA → Not Applicable

***The tested channel selected is based on the worst case radiated emission result from FCC ID: AZ492FT7138/ IC: 109U-92FT7138.**

6.0 Transmitter Test Parameters

6.1. RF Output Power

6.1.1. Test Setup

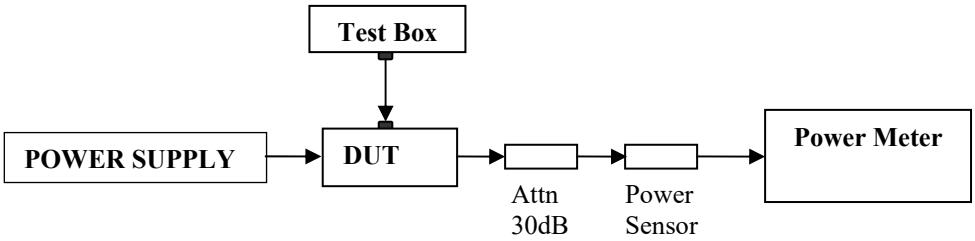

1) The DUT transmitter connected to Power Meter using the 30 dB attenuator and power sensor with above setup.
2) Path loss for the measurement included.
3) All the measurement was done at low, mid, high frequency for each band.
4) Record the power into the test report.

6.1.2. Test Result

Not Applicable

6.2. Frequency Stability

6.2.1. Test Setup

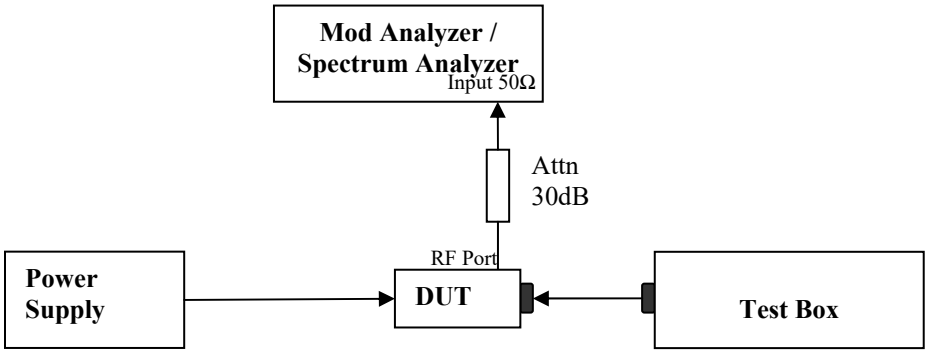

1) The DUT transmitter output port was connected to Modulation / Spectrum Analyzer.
2) Path loss for the measurement included.
3) Transmit the DUT and record the freq in MCF_{MHz}.
4) Test in 2 conditions:
   - Temperature: The frequency of the transmitter was measured from -30°C to 50°C.
   - Supply Voltage:
     -Mobile: The frequency of the transmitter was measured from 85% to 115% of the nominal operating input voltage.
     -Portable: The frequency of the transmitter was measured from nominal ± x % as specified by the manufacturer

5) Calculate the ppm frequency error by the following:

$$ppm\ error = \left(\frac{MCF_{MHz}}{ACF_{MHz}} - 1\right) * 10^6$$

Where: MCF_{MHz} is the Measured Carrier Frequency in MHz
ACF_{MHz} is the Assigned Carrier Frequency in MHz

6.2.2. Test Result

Not Applicable

6.2.3. Test Limit

As per manufacturer declared spec +/- #.#ppm

6.3. Modulation Characteristics

6.3.1. Test Setup

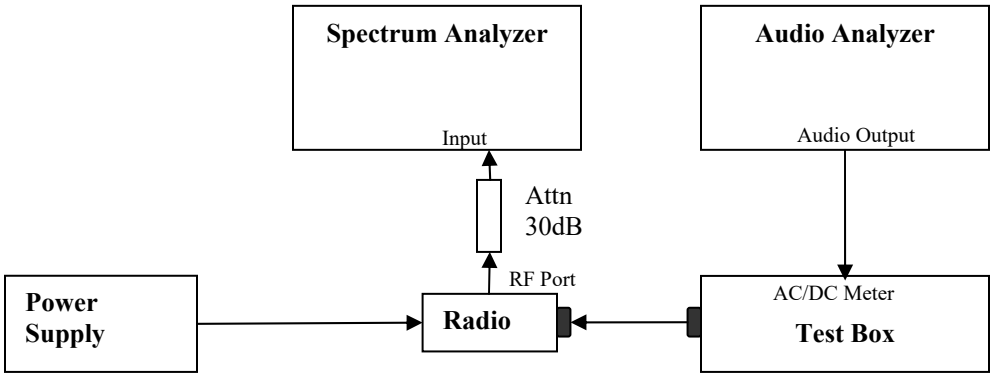

1) The DUT transmitter output port was connected to Modulation Analyzer.
2) Path loss for the measurement included.
3) Set the audio bandwidth filter to 15 kHz and 50 kHz.
4) Transmit the radio and set the audio analyzer to 1 kHz audio frequency and 20% of the Full rated system deviation.
5) On audio analyzer, set the rated level as 0dB reference
6) Vary the audio frequency from 300 Hz to 20 kHz. Record the change in modulation in reference to step 5.

6.3.2. Test Result
Not Applicable

6.3.3. Test Limit

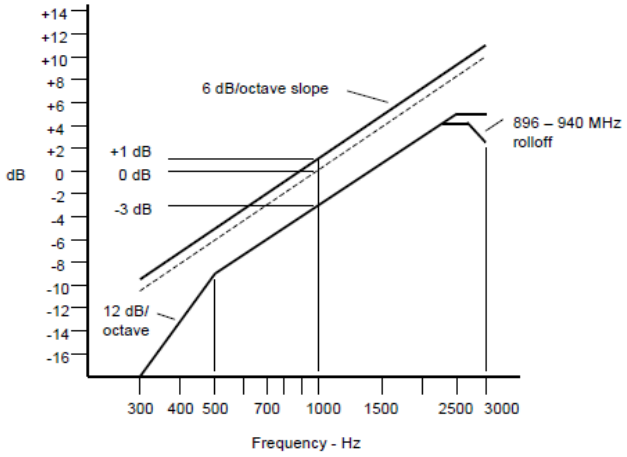

Note:

- *There are additional 6 dB per octave attenuation is allowed from 2.5KHz to 3KHz in equipment 25MHz to 869MHz radio.*
- *Additional 6 dB per octave attenuation is allowed from 2.3KHz to 2.7KHz & additional 12 dB per octave attenuation is allowed from 2.7KHz to 3KHz in equipment 896MHz to 940MHz radio.*

6.4. Modulation Limiting

6.4.1. Test Setup

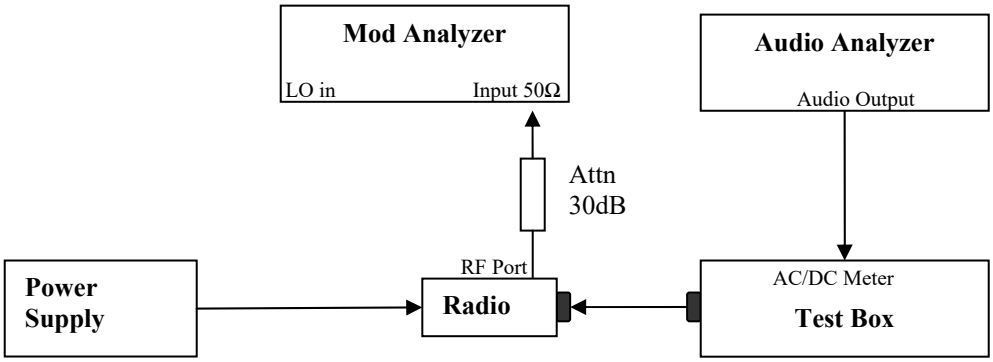

1) The DUT transmitter output port was connected to Modulation Analyzer.
2) Path loss for the measurement included.
3) Set the audio bandwidth filter to 15 kHz.
4) Transmit the radio and set the audio analyzer to 1 kHz audio frequency and 60% of the Full rated system deviation.
5) Record the frequency deviation as 0dB input level at 1kHz audio frequency.
6) Repeat the step and record the frequency deviation from -20 dB to 20dB by 5 dB increments and different audio freq 300 Hz, 2.5 kHz and 3 kHz.

6.4.2. Test Result

Not Applicable

6.4.3. Test Limit

Modulation Limiting shall not exceed 100 percent.

6.5. Occupied Bandwidth

6.5.1. Test Setup (Analog)

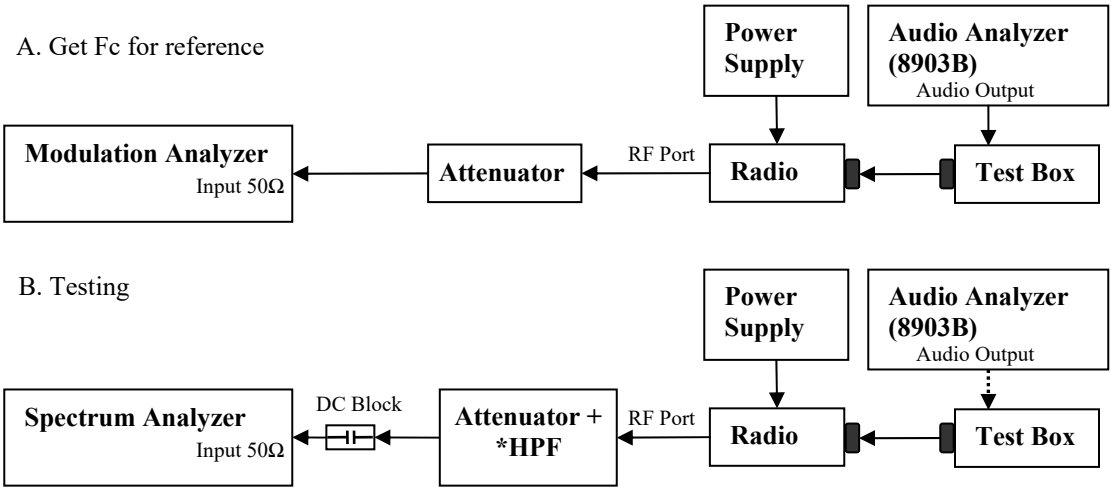

1) The DUT transmitter output port was connected to Modulation Analyzer.
2) Set the audio bandwidth filter to 15 kHz low pass filter and 50 kHz high pass filter.
3) Transmit the radio and set the audio analyzer to 2.5 kHz audio frequency and 50% of the rated deviation. Up the amplitude by 16 dB. Dekey the DUT.
4) Path loss for the measurement included.
5) Select the Occupied Bandwidth measurement for 99% Emissions Bandwidth Measurement.
6) Key in the Fc and Resolution Bandwidth (1 ~ 5 % of emission designator).
7) Transmit the DUT and record the occupied Bandwidth frequency.
8) Preset the spectrum analyzer for sideband spectrum measurement.
9) Set the span and Resolution Bandwidth (according to FCC/ ISED standard).
10) Save the screen shot as modulated signal
11) Remove the audio tone from audio analyzer to capture unmodulated signal.

* Only HPF added for Mask 80.211 measurement with attenuator.
* 99% Bandwidth measurement is computed by the spectrum analyzerand is consistent with the C63.26 5.4.4 method.

6.5.2. Test Result (Analog)

Not Applicable

6.5.3. Test Setup (Digital)

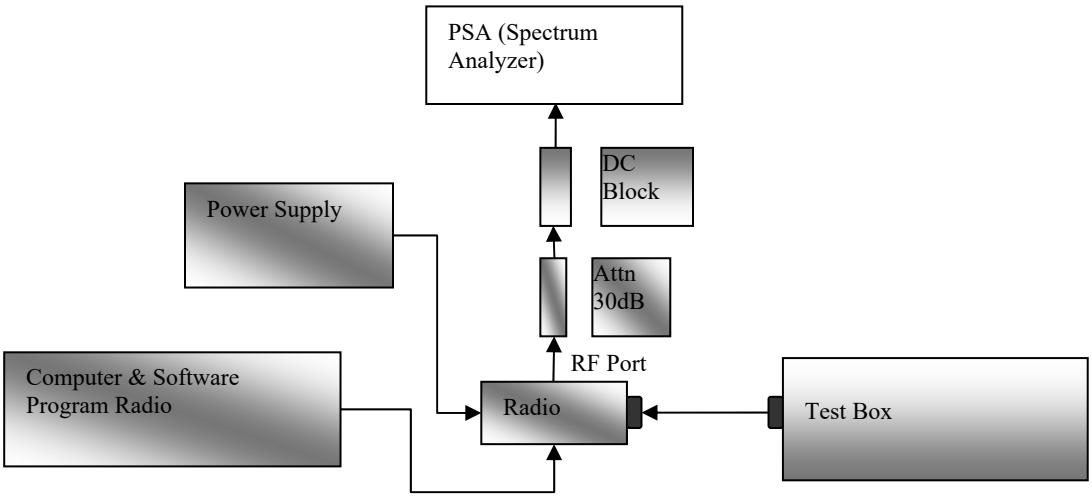

1) Program and set radio to operate in desire test frequency and digital mode with modulation. (*4FSK, C4FM or other digital modulation form).
2) Path loss for the measurement included.
3) Select the Occupied Bandwidth measurement for 99% Emissions Bandwidth Measurement.
4) Key in the Fc and Resolution Bandwidth (1 ~ 5 % of emission designator).
5) Transmit the DUT and record the occupied Bandwidth frequency.
6) Preset the spectrum analyzer for modulation emission spectrum measurement.
7) Set the span and Resolution Bandwidth (according to FCC/ ISED standard).
8) Capture the screen shot as modulated signal.

* 99% Bandwidth measurement is computed by the spectrum analyzer and is consistent with the C63.26 5.4.4 method.

*Note:
- For Digital Modulation, 12.5 kHz Data F1D & FXD would be the same. Therefore only measurements with F1D modulation shown below.
- For Digital Modulation, 12.5 kHz Data F1E & FXE would be the same. Therefore only measurements with F1E modulation shown below.

6.5.4. Test Result (Digital)

Not Applicable

6.5.5. Test Limit

The 99% occupied bandwidth is the width of a frequency band such that, below the lower and above the upper frequency limits, the mean powers emitted are each equal to a specified percentage 0.5% of the total mean transmitted power.

6.6. Band Edge Conducted Spurious Emission (Part 22)

6.6.1. Test Setup (Analog)

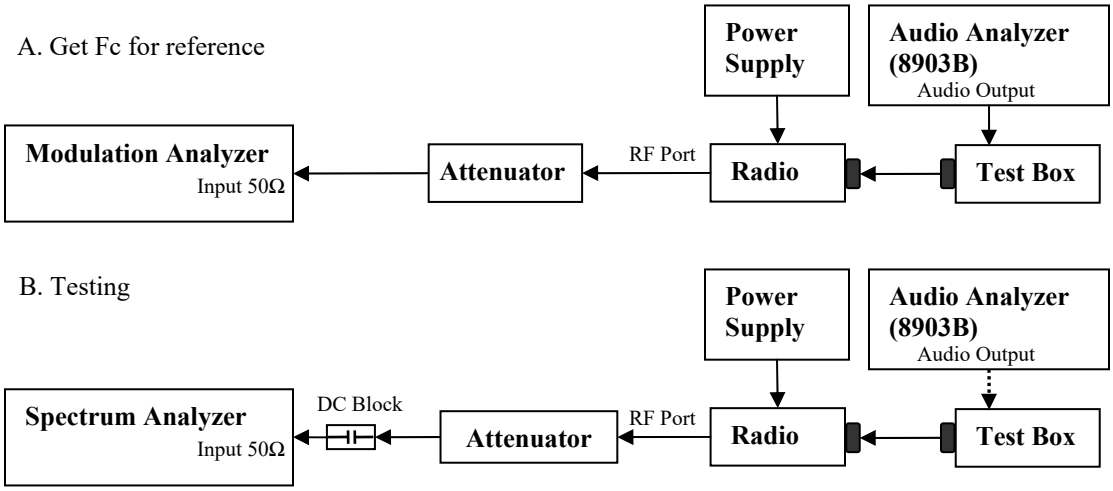

1) The DUT transmitter output port was connected to Modulation Analyzer.
2) Set the audio bandwidth filter to 15 kHz low pass filter and 50 kHz high pass filter.
3) Transmit the radio and set the audio analyzer to 2.5 kHz audio frequency and 50% of the rated deviation. Up the amplitude by 16 dB. Dekey the DUT.
4) Path loss for the measurement included.
5) Select the Occupied Bandwidth measurement for 99% and 26dB Emissions Bandwidth Measurement.
6) Key in the Fc and Resolution Bandwidth.
7) Transmit the DUT and record the occupied Bandwidth frequencies.
8) Preset the spectrum analyzer for band edge measurement.
9) The band edges of lowest and highest channels were measured.
10) Key in the Lowest and highest channel frequency, span is 60 kHz and Resolution Bandwidth is at least 1% of Emission Bandwidth.
11) Save the screen shot as modulated signal.
12) Remove the audio tone from audio analyzer to capture unmodulated signal.

*Note:
- For emission designator ending with F3E, 16K0F3E is the worst case and therefore only 16K0F3E will be shown.

6.6.2. Test Result (Analog)
Not Applicable

6.6.3. Test Setup (Digital)

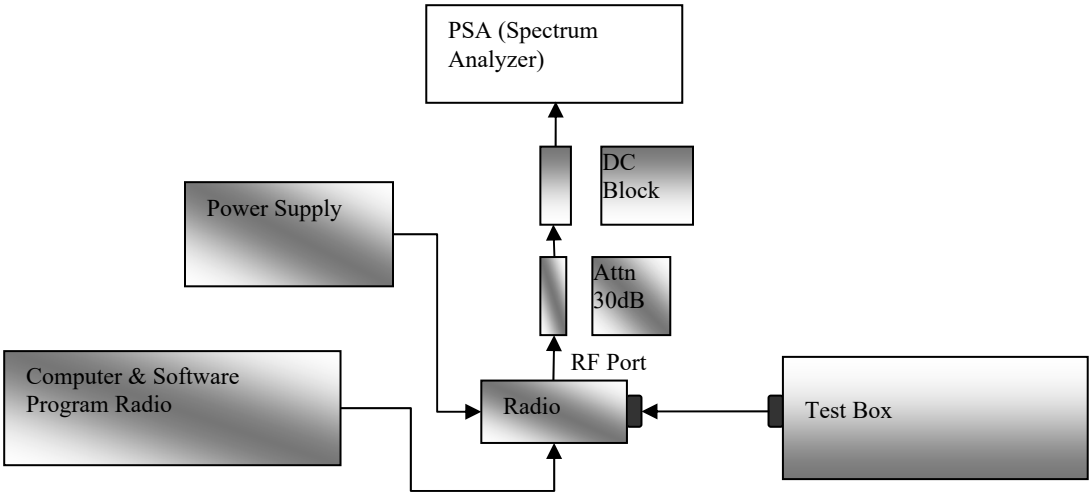

1) Program and set radio to operate in desire test frequency and digital mode with modulation. (*4FSK, C4FM or other digital modulation form).
2) Path loss for the measurement included.
3) Select the Occupied Bandwidth measurement for 99% and 26dB Emissions Bandwidth Measurement.
4) Key in the Fc and Resolution Bandwidth.
5) Transmit radio record the occupied Bandwidth frequencies.
6) Preset the spectrum analyzer for band edge measurement.
7) Key in the lowest and highest channels frequency, span is 60 kHz and Resolution Bandwidth is at least 1% of Emission Bandwidth.
8) Save the screen shot.

*Note:

- For Digital Modulation, 12.5 kHz Data F1D & FXD would be the same. Therefore only measurements with F1D modulation shown below.
- For Digital Modulation, 12.5 kHz Data F1E & FXE would be the same. Therefore only measurements with F1E modulation shown below.

6.6.4. Test Result (Digital)
Not Applicable

6.6.5. Test Limit

The power of any emission outside of the authorized operating frequency ranges must be attenuated below the transmitting power (P) by a factor of at least 43 + 10 log(P) dB.

6.7. Transient Frequency Behavior

6.7.1. Test Setup

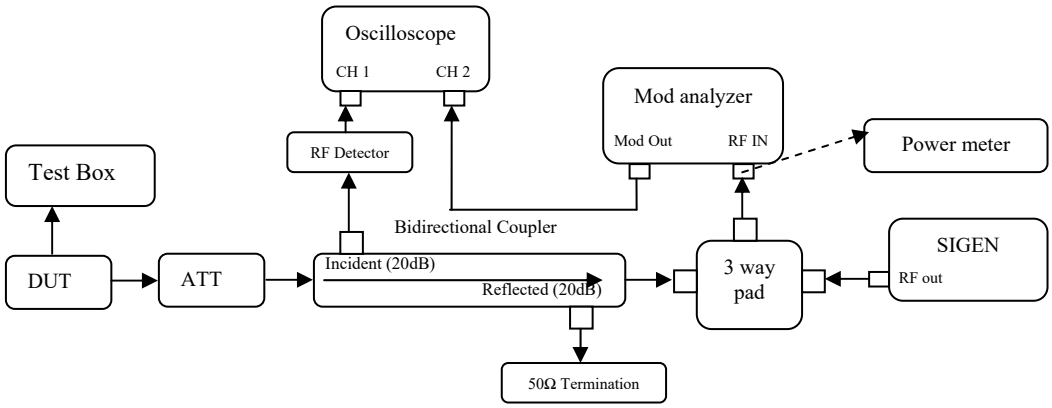

1) Connect the setup as figure above.
2) Path loss for the measurement included.
3) Set on Sigen with the assigned center frequency, internal 1 kHz FM tone.
   FM Deviation: Analog 25kHz Channel Spacing = 25 kHz
   Analog 12.5 kHz Channel Spacing = 12.5 kHz
   C4FM = 12.5 kHz
4) Turn on 50 kHz high pass filter and 15 kHz low pass filter on modulation analyzer.
5) Supply sufficient attenuation ATT to provide the output power of ≤ -11dBm into power meter when DUT is keying up.
6) Note the power level on power meter and dekey the DUT.
7) Adjust the amplitude of the signal generator to the level power meter, maintained the amplitude throughout the rest of the measurement.
8) Connect the output to modulation analyzer.
9) Reduce 30dB attenuation and transmit the radio to get the trigger line.
10) Capture the screen shot for key-up (rising edge) and de-key (falling edge) mode.

6.7.2. Test Result

Not Applicable

6.7.3. Test Limit

Transmitters designed to operate in the 150-174 MHz and 421-512 MHz frequency bands must maintain transient frequencies within the maximum frequency difference limits during the time intervals indicated:

Time intervals[1 2]	**Maximum frequency difference[3]**	**All equipment**	
		150 to 174 MHz	**421 to 512 MHz**
Transient Frequency Behavior for Equipment Designed to Operate on 25 kHz Channels			
t_1[4]	±25.0 kHz	5.0 ms	10.0 ms
t_2	±12.5 kHz	20.0 ms	25.0 ms
t_3[4]	±25.0 kHz	5.0 ms	10.0 ms
Transient Frequency Behavior for Equipment Designed to Operate on 12.5 kHz Channels			
t_1[4]	±12.5 kHz	5.0 ms	10.0 ms
t_2	±6.25 kHz	20.0 ms	25.0 ms
t_3[4]	±12.5 kHz	5.0 ms	10.0 ms
Transient Frequency Behavior for Equipment Designed to Operate on 6.25 kHz Channels			
t_1[4]	±6.25 kHz	5.0 ms	10.0 ms
t_2	±3.125 kHz	20.0 ms	25.0 ms
t_3[4]	±6.25 kHz	5.0 ms	10.0 ms

[1] t_{on} is the instant when a 1 kHz test signal is completely suppressed, including any capture time due to phasing.
t_1 is the time period immediately following t_{on}.
t_2 is the time period immediately following t_1.
t_3 is the time period from the instant when the transmitter is turned off until t_{off}.
t_{off} is the instant when the 1 kHz test signal starts to rise.
[2] During the time from the end of t_2 to the beginning of t_3, the frequency difference must not exceed the limits specified in §90.213.
[3] Difference between the actual transmitter frequency and the assigned transmitter frequency.
[4] If the transmitter carrier output power rating is 6 watts or less, the frequency difference during this time period may exceed the maximum frequency difference for this time period.

6.8. Adjacent Channel Power

6.8.1. Test Setup (Analog)

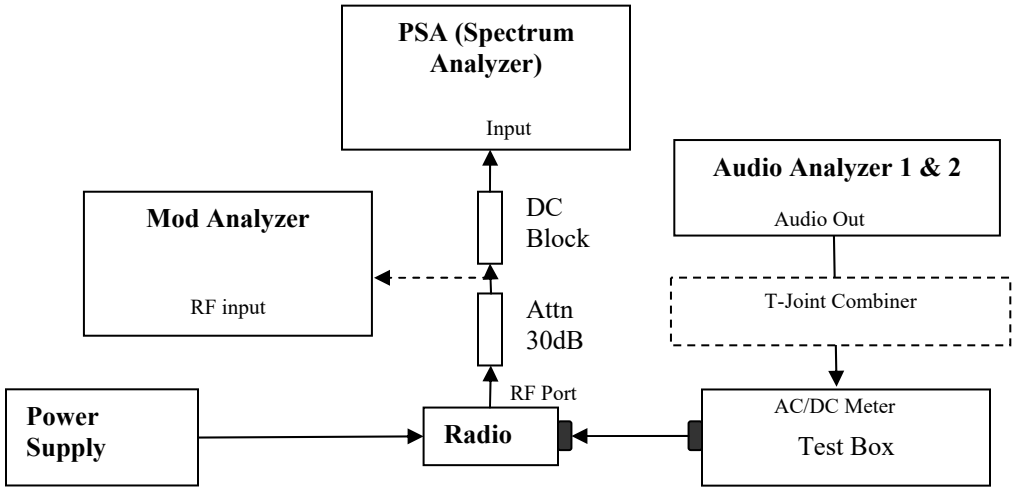

1) The DUT transmitter output port was connected to modulation analyzer.
2) Transmit the radio and turn on 1st audio analyzer with audio frequency 650Hz, 50% rated deviation, and record the amplitude value as AmpT1.
3) Turn off Audio analyzer 1 and turn on audio analyzer 2, set the audio frequency to 2.2 kHz and 50% deviation. Record the amplitude as AmpT2.
4) Turn both audio analyzers ON and up 10dB amplitude level.
5) Connect the output to PSA and set to assigned center frequency.
6) Set Span, Resolution Bandwidth and Video Bandwidth per rules part.
7) Transmit the radio and record the Adjacent Channel Power value in dBc.

6.8.2. Test Result

Not Applicable

6.8.3. Test Setup (Digital)

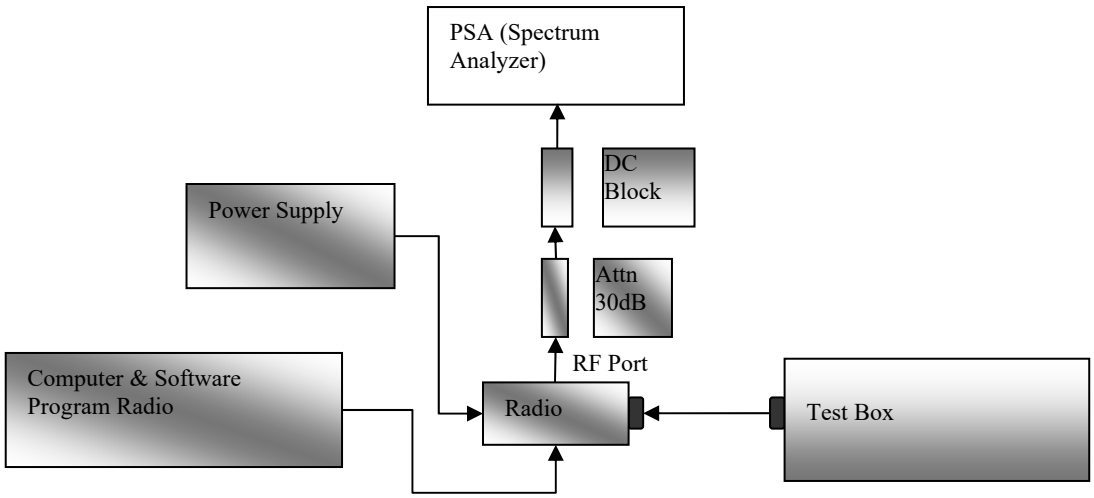

1) Program and set radio to operate in desire test frequency and digital mode with modulation. (4FSK, C4FM or other digital modulation form).
2) Prepare setup as per picture.
3) Turn on the ACP Measurement – Press Measure, ACP.
4) Set Span, Resolution Bandwidth and Video Bandwidth as per rules part.
5) Transmit the radio and record the Adjacent Channel Power value in dBc.

6.8.4. Test Result

Not Applicable

6.8.5. Test Limit

12.5 kHz Mobile Transmitter ACP Requirements

Offset from center frequency (kHz)	Measurement bandwidth (kHz)	Maximum ACP relative (dBc)
9.375	6.25	−40
15.625	6.25	−60
21.875	6.25	−60
37.50	25.00	−60
62.50	25.00	−65
87.50	25.00	−65
150.00	100	−65
250.00	100	−65
350.00	100	−65
>400 to 12 MHz	30 (s)	−75
12 MHz to paired receive band	30 (s)	−75
In the paired receive band	30 (s)	−100

25 kHz Mobile Transmitter ACP Requirements

Offset from center frequency (kHz)	Measurement bandwidth (kHz)	Maximum ACP relative (dBc)
15.625	6.25	−40
21.875	6.25	−60
37.50	25	−60
62.50	25	−65
87.50	25	−65
150.00	100	−65
250.00	100	−65
350.00	100	−65
>400 kHz to 12 MHz	30 (s)	−75
12 MHz to paired receive band	30 (s)	−75
In the paired receive band	30 (s)	−100

12.5 kHz Base Transmitter ACP Requirements

Offset from center frequency (kHz)	Measurement bandwidth (kHz)	Maximum ACP (dBc)
9.375	6.25	−40
15.625	6.25	−60
21.875	6.25	−60
37.5	25	−60
62.5	25	−65
87.5	25	−65
150	100	−65
250	100	−65
350.00	100	−65
>400 kHz to 12 MHz	30 (s)	−80
12 MHz to paired receive band	30 (s)	−80
In the paired receive band	30 (s)	[1]-85

25 kHz Base Transmitter ACP Requirements

Offset from center frequency (kHz)	Measurement bandwidth (kHz)	Maximum ACP (dBc)
15.625	6.25	−40
21.875	6.25	−60
37.5	25	−60
62.5	25	−65
87.5	25	−65
150	100	−65
250	100	−65
350	100.00	−65
>400 kHz to 12 MHz	30 (s)	−80
12 MHz to paired receive band	30 (s)	−80
In the paired receive band	30 (s)	[1]-85

6.9. Conducted Spurious Emission

6.9.1. Test Setup

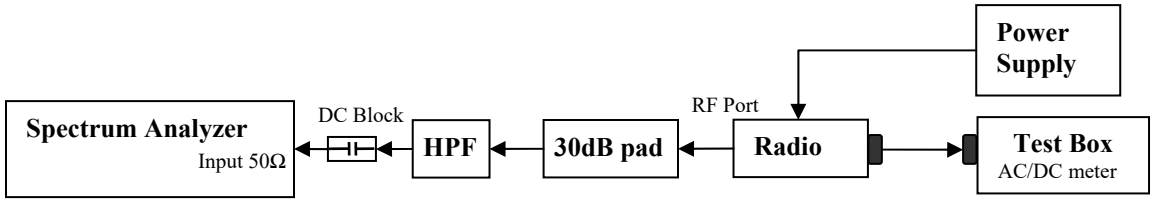

1) The DUT transmitter output port was connected to Spectrum Analyzer with above setup.
2) Program and set radio to operate in desire test frequency and mode. (Analog / digital modulation form).
3) Path loss for the measurement included.
4) Set the PSA Resolution Bandwidth as per rules part.
5) Set the Ref offset from the pathloss offset calibration file.
6) Adjust the center frequency of the spectrum analyzer for incremental coverage of the range from:
    a. 9 KHz to Fc – Test Bandwidth
    b. Fc + Test Bandwidth to 2Fc – 5MHz.
7) Key up the DUT, Peak Search the highest Spur and record the levels of spurious emissions
8) Dekey the DUT.
9) Turn On High Pass Filter path and Key up the DUT.
10) Adjust the PSA Freq for incremental coverage of range from 2Fc to 10Fc
11) Key up the DUT and record the highest spur levels of spurious emissions.

6.9.2. Test Result (Analog)

Not Applicable

6.9.3. Test Result (Digital)

Not Applicable

6.9.4. Test Limit

Table below summarized the power of any emission outside a licensee's frequency block shall be attenuated below the transmitter power (P) by at least

Channel Spacing	Part 22	Part 24D	Part 74	Part 80	Part 90 (UHF, VHF, 800, 900)	Part 90 (700)
12.5kHz	43 + log10(P) (-13 dBm)	43 + log10(P) (-13 dBm)	43 + log10(P) (-13 dBm)	Not Applicable	50 + log10(P) (-20 dBm)	43 + log10(P) (-13 dBm)
25kHz		Not Applicable		43 + log10(P) (-13 dBm)	43 + log10(P) (-13 dBm)	43 + log10(P) (-13 dBm)

Channel Spacing	RSS 134	RSS 182	RSS 119 (UHF, VHF, 800, 900)	RSS 119 (700)
12.5kHz	43 + log10(P) (-13 dBm)	Not Applicable	50 + log10(P) (-20 dBm)	43 + log10(P) (-13 dBm)
25kHz	Not Applicable	43 + log10(P) (-13 dBm)	43 + log10(P) (-13 dBm)	43 + log10(P) (-13 dBm)

6.10. Radiated Spurious Emission

6.10.1. Test Setup

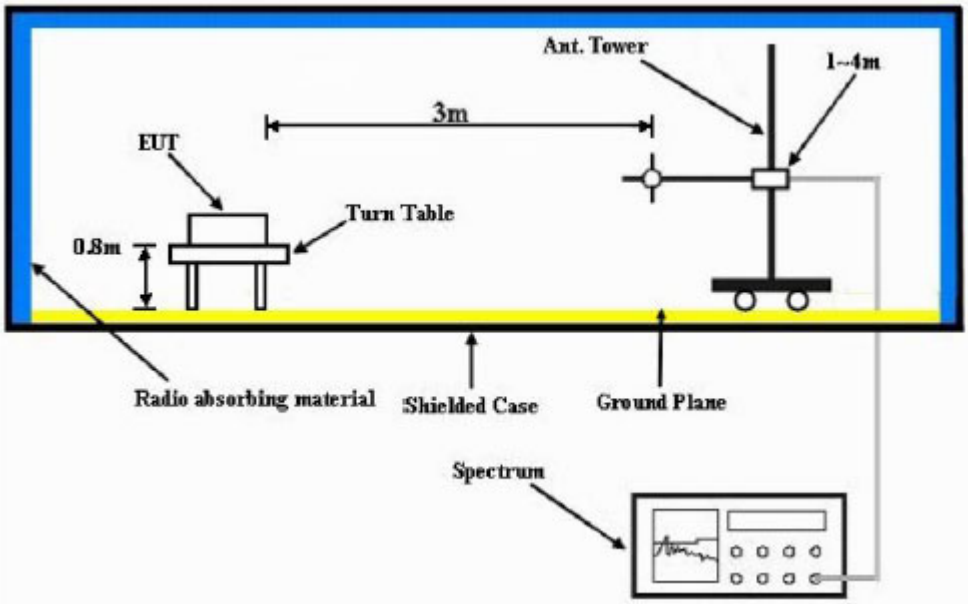

1) The Resolution Bandwidth for scanning Radiated Emission below 1 GHz is 100 kHz with Video Bandwidth = 300 kHz and Resolution Bandwidth for above 1 GHz is 1 MHz with Video Bandwidth = 3 MHz. Detector mode is positive peak.
2) In the semi- anechoic chamber, setup as illustrated above the DUT placed on the 0.8m height (for Fc < 1GHz) or 1.5m height (for Fc > 1GHz) of Turn Table, rotated the table around 360 degrees to search the maximum radiation power and receiver antenna shall be rotated vertical and horizontal polarization and moved height from 1m to 4m to find the maximum polar radiated power. The "Read Value" is the spectrum reading the maximum power value.
3) The substitution antenna is substituted for DUT at the same position and signals generator (S.G) export the CW signal to the substitution antenna via a TX cable. The receiver antenna shall be rotated vertical and horizontal polarization and moved height from 1m to 4m to find the maximum radiation power. Record the power level of maximum radiation power from spectrum. So, the measured substitution value = Ref level of S.G + TX cables loss – Substituted Antenna Gain.
4) Final Radiated Spurious Emission = "Read Value" + Measured substitution value.

6.10.2. Test Result (Analog)

SAC Transmitter Radiated Emission:

Model Number: AAM28JQN9RA1AN-1 **S/N: 511TYP0129** **SR:36733-EMC-00003**

Battery Part No: NA **Accy Part No: RMN5127C-CF2, HKN4192C-C3**

Test Mode: TX Analog

158.550000 MHz **25 kHz** **54.000 Watt(s) /Max Power**

Frequency (MHz)	Limit	Horizontal Measured Emission Equiv Pwr Into Ideal Dipole (dBm)	Vertical Measured Emission Equiv Pwr Into ideal Dipole (dBm)
317.1000	-13.0000	-83.6213 **	-84.9056 **
475.6500	-13.0000	-78.9143 **	-78.6293 **
634.2000	-13.0000	-76.9421 **	-76.9390 **
792.7500	-13.0000	-75.4276 **	-76.4557 **
951.3000	-13.0000	-74.0726 **	-74.8625 **
1109.8500	-13.0000	-61.0896 **	-62.3437 **
1268.4000	-13.0000	-60.8001 **	-61.6298 **
1426.9500	-13.0000	-61.0414 **	-60.4006 **
1585.5000	-13.0000	-60.2843 **	-60.0517 **

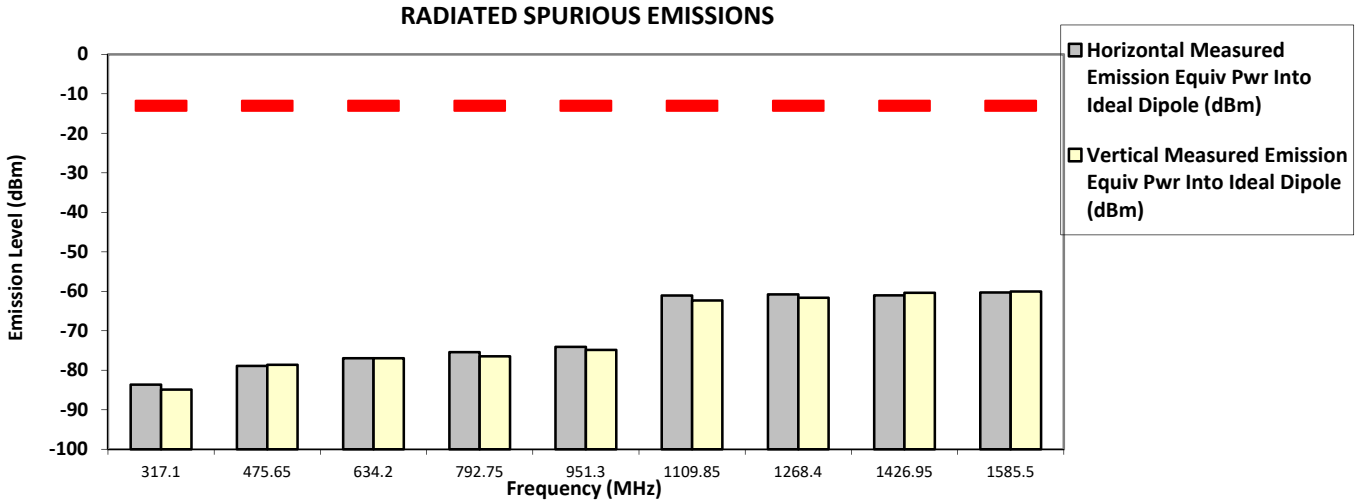

The data presented here was taken using the substitution method as found in the ANSI C63.26-2015 document.

Motorola Penang EMC Lab - Test Performed by: Nazrin&Qawiman **Thu, 20 Oct, 2022**

Remarks: ** Indicates the spurious emission could not be detected due to noise limitations or ambient.

***Pursuant to CFR 47 Part 2.1057 (c), emissions attenuated more than 20 dB below the permissible limit are not reported**

Temp(Deg): 23.8 Hum(%RH): 69.7

System MU: 4.03 dB

Remarks:	Passed Results	**Marginal Results**	**Failed Results**

SAC Transmitter Radiated Emission:

Model Number: AAM28JQN9RA1AN-1 **S/N: 511TYP0125** **SR:36733-EMC-00002**
Battery Part No: NA **Accy Part No: RMN5127C-CF2, HKN4192C-C3**
Test Mode: TX Analog
161.700000 MHz **25 kHz** **25.000 Watt(s) /Low Power**

Frequency (MHz)	Limit	Horizontal Measured Emission Equiv Pwr Into Ideal Dipole (dBm)	Vertical Measured Emission Equiv Pwr Into ideal Dipole (dBm)
323.4000	-13.0000	-84.5618 **	-83.9015 **
485.1000	-13.0000	-78.8157 **	-78.4648 **
646.8000	-13.0000	-76.9174 **	-76.4658 **
808.5000	-13.0000	-75.3703 **	-75.9911 **
970.2000	-13.0000	-73.4840 **	-74.3353 **
1131.9000	-13.0000	-61.6665 **	-61.6797 **
1293.6000	-13.0000	-59.4845 **	-60.3563 **
1455.3000	-13.0000	-60.2429 **	-60.5905 **
1617.0000	-13.0000	-60.2368 **	-58.3018 **

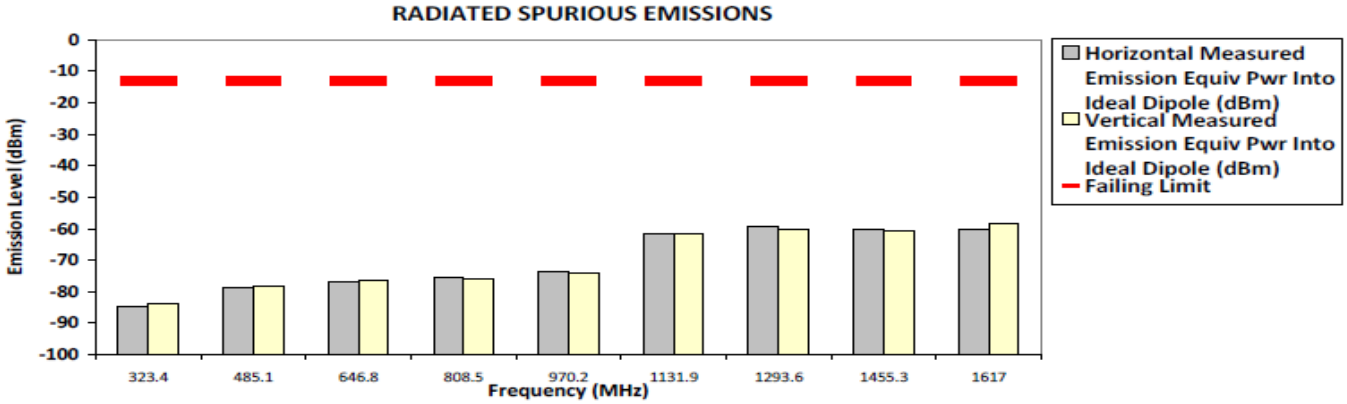

The data presented here was taken using the substitution method as found in the ANSI C63.26-2015 document.
Motorola Penang EMC Lab - Test Performed by: Qawiman&Nazrin Wed, 19 Oct, 2022

Remarks: ** Indicates the spurious emission could not be detected due to noise limitations or ambient.
*Pursuant to CFR 47 Part 2.1057 (c), emissions attenuated more than 20 dB below the permissible limit are not reported
Temp(Deg): 23.8 Hum(%RH): 69.7

System MU: 4.03 dB

Remarks: Passed Results | Marginal Results | Failed Results

SAC Transmitter Radiated Emission:

Model Number: AAM28JQN9RA1AN-1 **S/N: 511TYP0125** **SR:36733-EMC-00002**
Battery Part No: NA **Accy Part No: RMN5127C-CF2, HKN4192C-C3**
Test Mode: TX Analog
161.700000 MHz **25 kHz** **54.000 Watt(s) /Max Power**

Frequency (MHz)	Limit	Horizontal Measured Emission Equiv Pwr Into Ideal Dipole (dBm)	Vertical Measured Emission Equiv Pwr Into ideal Dipole (dBm)
323.4000	-13.0000	-84.4449 **	-83.7460 **
485.1000	-13.0000	-79.3177 **	-78.7779 **
646.8000	-13.0000	-76.2586 **	-77.9953 **
808.5000	-13.0000	-75.6082 **	-76.4550 **
970.2000	-13.0000	-74.9721 **	-73.8284 **
1131.9000	-13.0000	-61.2690 **	-61.4327 **
1293.6000	-13.0000	-59.5403 **	-60.4680 **
1455.3000	-13.0000	-60.0204 **	-60.0266 **
1617.0000	-13.0000	-57.8308 **	-59.1746 **

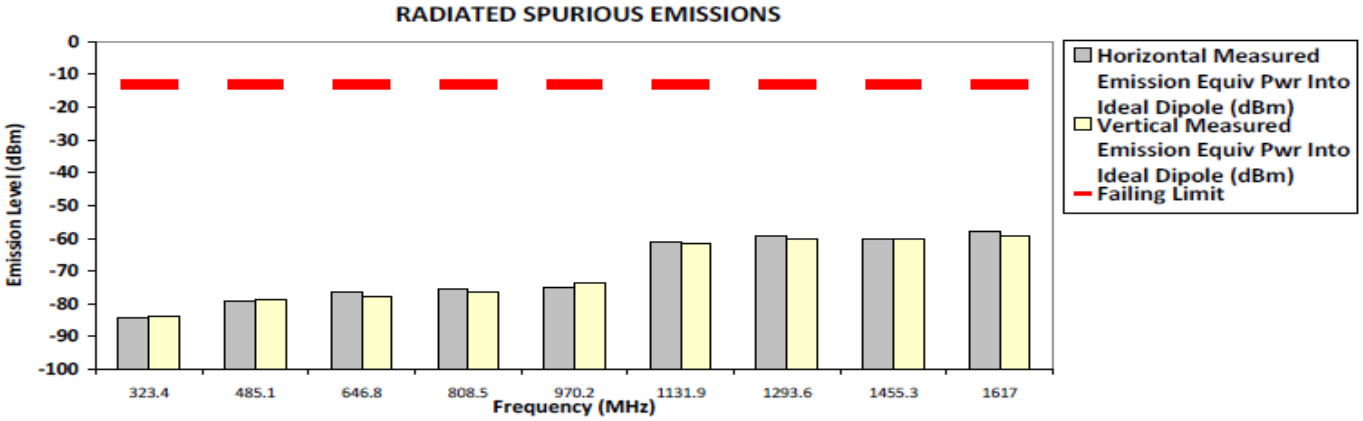

The data presented here was taken using the substitution method as found in the ANSI C63.26-2015 document.
Motorola Penang EMC Lab - Test Performed by: Qawiman&Nazrin Wed, 19 Oct, 2022

Remarks: ** Indicates the spurious emission could not be detected due to noise limitations or ambient.
*Pursuant to CFR 47 Part 2.1057 (c), emissions attenuated more than 20 dB below the permissible limit are not reported
Temp(Deg): 23.8 Hum(%RH): 69.7

System MU: **4.03** dB

Remarks: Passed Results | Marginal Results | Failed Results

6.10.3. Test Result (Digital)

SAC Transmitter Radiated Emission:

Model Number: AAM28JQN9RA1AN-1 **S/N: 511TYP0125** **SR:36733-EMC-00002**
Battery Part No: NA **Accy Part No: RMN5127C-CF2, HKN4192C-C3**
Test Mode: TX Digital
161.700000 MHz **12.5 kHz** **25.000 Watt(s) /Low Power**

Frequency (MHz)	Limit	Horizontal Measured Emission Equiv Pwr Into Ideal Dipole (dBm)	Vertical Measured Emission Equiv Pwr Into ideal Dipole (dBm)
323.4000	-20.0000	-83.6718 **	-84.7236 **
485.1000	-20.0000	-79.2179 **	-78.9707 **
646.8000	-20.0000	-77.0327 **	-77.2940 **
808.5000	-20.0000	-74.8185 **	-75.6870 **
970.2000	-20.0000	-75.3014 **	-73.9837 **
1131.9000	-20.0000	-60.6783 **	-61.7343 **
1293.6000	-20.0000	-59.6894 **	-60.2638 **
1455.3000	-20.0000	-60.5454 **	-58.7522 **
1617.0000	-20.0000	-59.5728 **	-58.5052 **

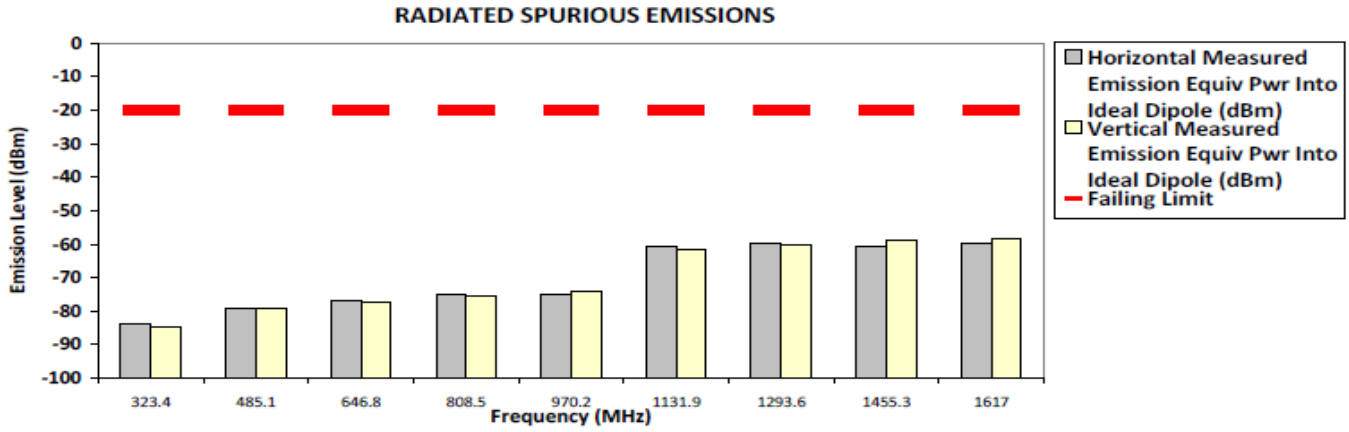

The data presented here was taken using the substitution method as found in the ANSI C63.26-2015 document.
Motorola Penang EMC Lab - Test Performed by: Qawiman&Nazrin Wed, 19 Oct, 2022

Remarks: ** Indicates the spurious emission could not be detected due to noise limitations or ambient.
*Pursuant to CFR 47 Part 2.1057 (c), emissions attenuated more than 20 dB below the permissible limit are not reported
Temp(Deg): 23.8 Hum(%RH): 69.7

System MU: **4.03** dB

Remarks: Passed Results | Marginal Results | Failed Results

SAC Transmitter Radiated Emission:

Model Number: AAM28JQN9RA1AN-1 **S/N: 511TYP0125** **SR:36733-EMC-00002**
Battery Part No: NA **Accy Part No: RMN5127C-CF2, HKN4192C-C3**
Test Mode: TX Digital
161.700000 MHz **12.5 kHz** **54.000 Watt(s) /Max Power**

Frequency (MHz)	Limit	Horizontal Measured Emission Equiv Pwr Into Ideal Dipole (dBm)	Vertical Measured Emission Equiv Pwr Into ideal Dipole (dBm)
323.4000	-20.0000	-84.8178 **	-82.7592 **
485.1000	-20.0000	-78.0505 **	-79.3569 **
646.8000	-20.0000	-76.7548 **	-76.7771 **
808.5000	-20.0000	-75.4109 **	-75.4192 **
970.2000	-20.0000	-74.7862 **	-74.2045 **
1131.9000	-20.0000	-61.4121 **	-61.3537 **
1293.6000	-20.0000	-60.8932 **	-58.9086 **
1455.3000	-20.0000	-59.3051 **	-58.9825 **
1617.0000	-20.0000	-60.0198 **	-59.0734 **

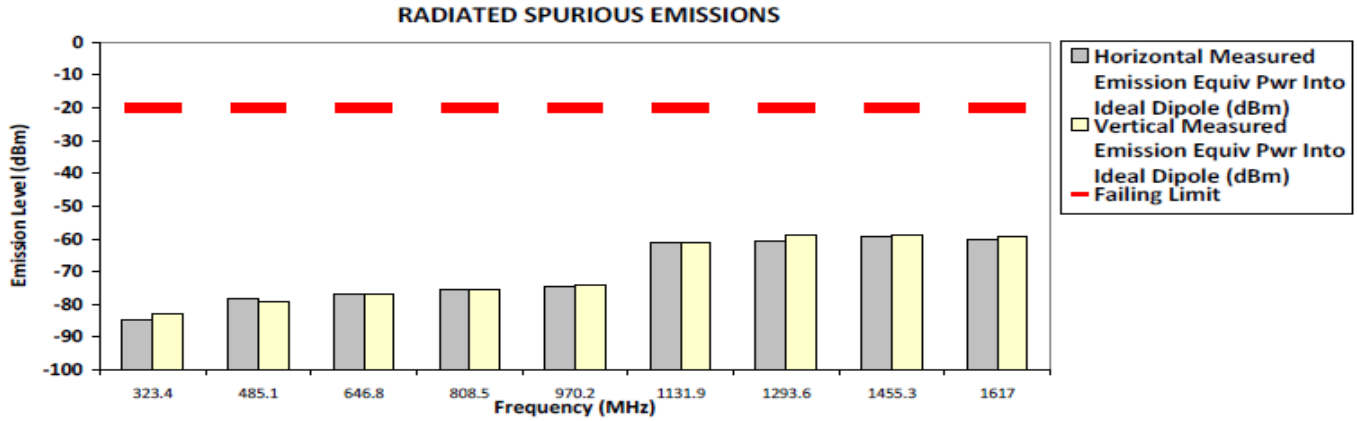

The data presented here was taken using the substitution method as found in the ANSI C63.26-2015 document.
Motorola Penang EMC Lab - Test Performed by: Qawiman&Nazrin Wed, 19 Oct, 2022

Remarks: ** Indicates the spurious emission could not be detected due to noise limitations or ambient.
*Pursuant to CFR 47 Part 2.1057 (c), emissions attenuated more than 20 dB below the permissible limit are not reported
Temp(Deg): 23.8 Hum(%RH): 69.7

System MU: 4.03 dB

Remarks: Passed Results | Marginal Results | Failed Results

6.10.4. Test Limit

Table below summarized the power of any emission outside a licensee's frequency block shall be attenuated below the transmitter power (P) by at least

Channel Spacing	Part 22	Part 24D	Part 74	Part 80	Part 90 (UHF, VHF, 800, 900)	Part 90 (700)
12.5kHz	43 + log10(P) (-13 dBm)	43 + log10(P) (-13 dBm)	43 + log10(P) (-13 dBm)	Not Applicable	50 + log10(P) (-20 dBm)	43 + log10(P) (-13 dBm)
25kHz		Not Applicable		43 + log10(P) (-13 dBm)	43 + log10(P) (-13 dBm)	43 + log10(P) (-13 dBm)

Channel Spacing	RSS 134	RSS 182	RSS 119 (UHF, VHF, 800, 900)	RSS 119 (700)
12.5kHz	43 + log10(P) (-13 dBm)	Not Applicable	50 + log10(P) (-20 dBm)	43 + log10(P) (-13 dBm)
25kHz	Not Applicable	43 + log10(P) (-13 dBm)	43 + log10(P) (-13 dBm)	43 + log10(P) (-13 dBm)

6.11. Effective Radiated Power (ERP)

6.11.1. Test Setup

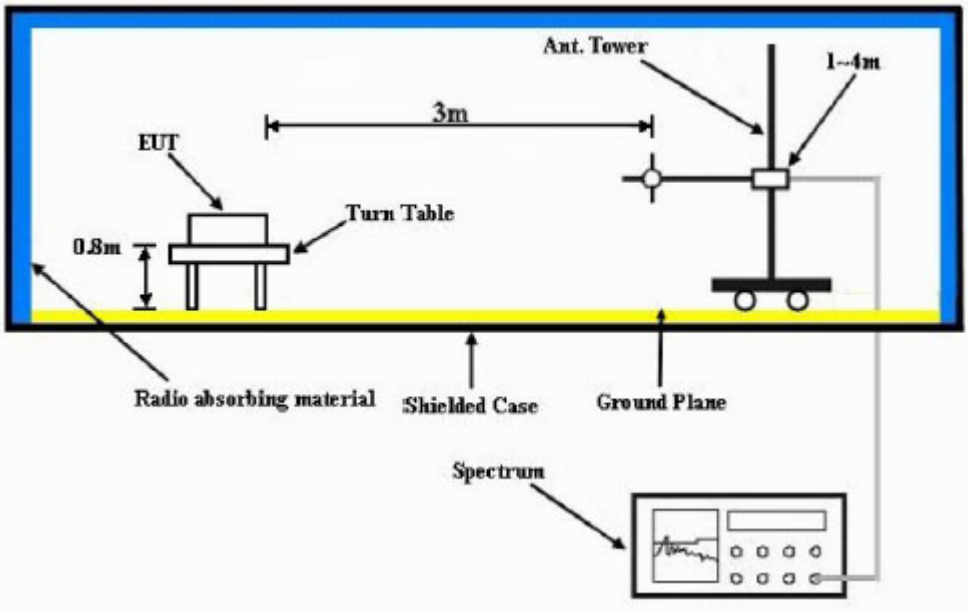

1) The Resolution Bandwidth for Equivalent Radiated Power (ERP) below 1 GHz is 100 kHz with Video Bandwidth = 300 kHz and Resolution Bandwidth for EIRP above 1 GHz is 1 MHz with Video Bandwidth = 3 MHz. Detector Mode is RMS.
2) In the semi-anechoic chamber, setup as illustrated above the DUT placed on the 0.8m height (for Fc < 1GHz) or 1.5m (for Fc > 1GHz) of Turn Table, rotated the table 45 degree each interval to search the maximum radiation power and receiver antenna shall be rotated vertical and horizontal polarization and moved height from 1m to 4m to find the maximum polar radiated power for each degree interval. The "Read Value" is the spectrum reading of maximum power value.
3) The substitution antenna is substituted for DUT at the same position and signals generator (S.G) export the CW signal to the substitution antenna via a TX cable. The receiver antenna shall be rotated vertical and horizontal polarization and moved height from 1m to 4m to find the maximum radiation power. Record the power level of maximum radiation power from spectrum. So, the Measured substitution value = Ref level of S.G + TX cables loss – Substituted Antenna Gain.

6.11.2. Test Result

Not Applicable

6.11.3. Test Limit

The maximum output power of the transmitter for mobile stations is 100 watts (20 dB). Power is given in terms of effective radiated power (ERP).

6.12. GNSS (EIRP for 1559 - 1610MHz)

6.12.1. Test Setup

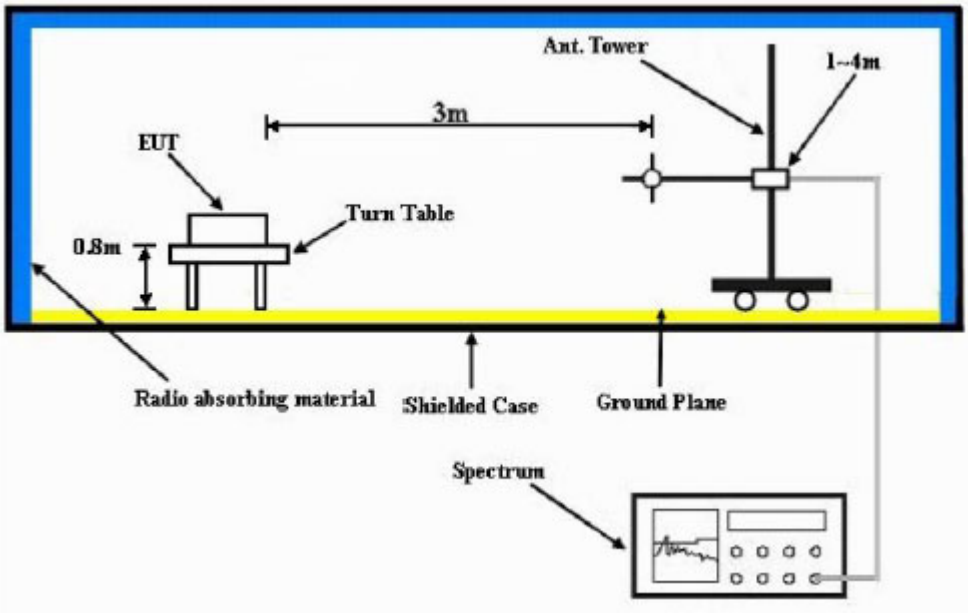

4) The Resolution Bandwidth for Equivalent Isotropically Radiated Power (EIRP) below 1 GHz is 100 kHz with Video Bandwidth = 300 kHz and Resolution Bandwidth for EIRP above 1 GHz is 1 MHz with Video Bandwidth = 3 MHz. Detector Mode is RMS.
5) In the semi-anechoic chamber, setup as illustrated above the DUT placed on the 0.8m height of Turn Table, rotated the table 45 degree each interval to search the maximum radiation power and receiver antenna shall be rotated vertical and horizontal polarization and moved height from 1m to 4m to find the maximum polar radiated power for each degree interval. The "Read Value" is the spectrum reading of maximum power value.
6) The substitution antenna is substituted for DUT at the same position and signals generator (S.G) export the CW signal to the substitution antenna via a TX cable. The receiver antenna shall be rotated vertical and horizontal polarization and moved height from 1m to 4m to find the maximum radiation power. Record the power level of maximum radiation power from spectrum. So, the Measured substitution value = Ref level of S.G + TX cables loss – Substituted Antenna Gain.
7) EIRP = "Read Value" + Measured substitution value + 2.15.

6.12.1. Test Result
Not Applicable

6.12.2. Test Limit
For operations in the 758-775 MHz and 788-805 MHz bands, all emissions including harmonics in the band 1559-1610 MHz shall be limited to −70 dBW/MHz equivalent isotropically radiated power (EIRP) for wideband signals, and −80 dBW EIRP for discrete emissions of less than 700 Hz bandwidth.

~ End of Test Report ~