EXHIBIT 9

INTERNAL PHOTOGRAPHS

(Pursuant to FCC Part 2.1033(b)(7), 2.1033(c)(14) and RSP 100 Sec 4)

The following photographs are attached.

	Exhibit
1. RF board with Shields (Top)	9A
2. RF board without Shields (Top)	9B
3. RF board with Shields (Bottom)	9C
4. RF board without Shields (Bottom)	9D
5. RF boards with chassis and control head (Top), Model 1	9E
6. Chassis and control head (Bottom), Model 1	9F
7. RF boards with chassis and control head (Top), Model 2	9G
8. Chassis and control head (Bottom), Model 2	9H
9. Wifi/GPS/BT board (Top)	9I
10.Wifi/GPS/BT board with Shield (Bottom)	9J
11. Wifi/GPS/BT board without Shield (Bottom)	9K
12. GOB board (Top)	9L
13. GOB board with Shield (Bottom)	9M
14. GOB board without Shield (Bottom)	9N
15. Exploded view of radio	9O
16. Exploded view of colour display control head	9P
17. Exploded view of numeric display control head	9Q

Exhibits 9A

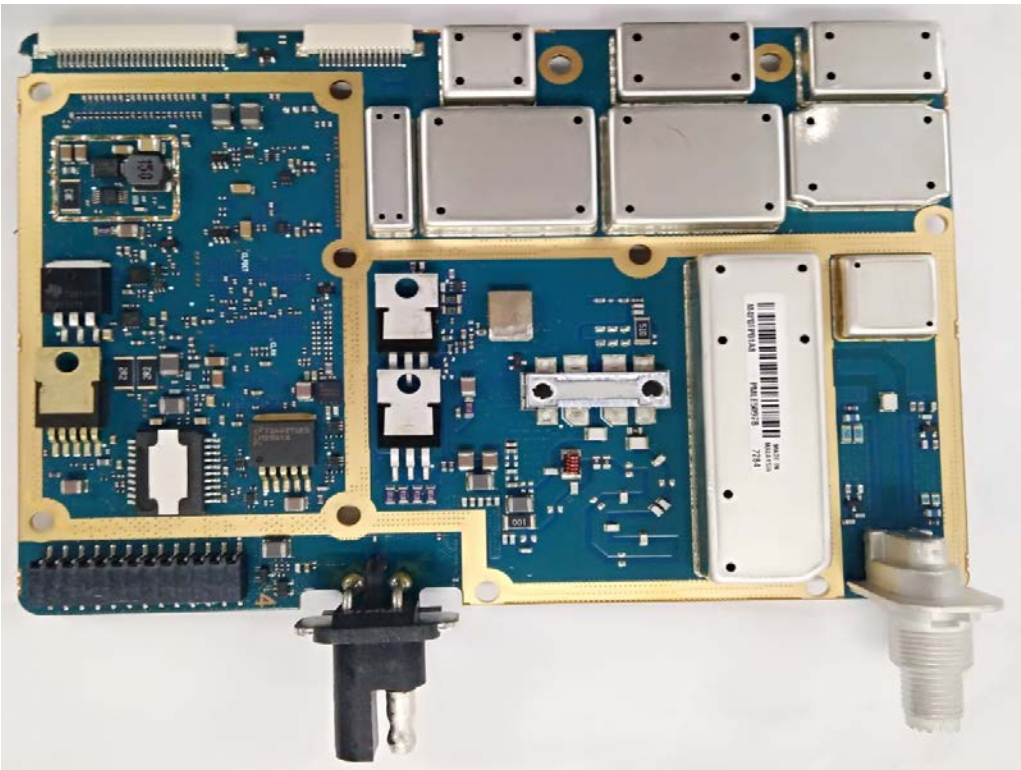

RF board with Shields (Top)

Exhibit 9B

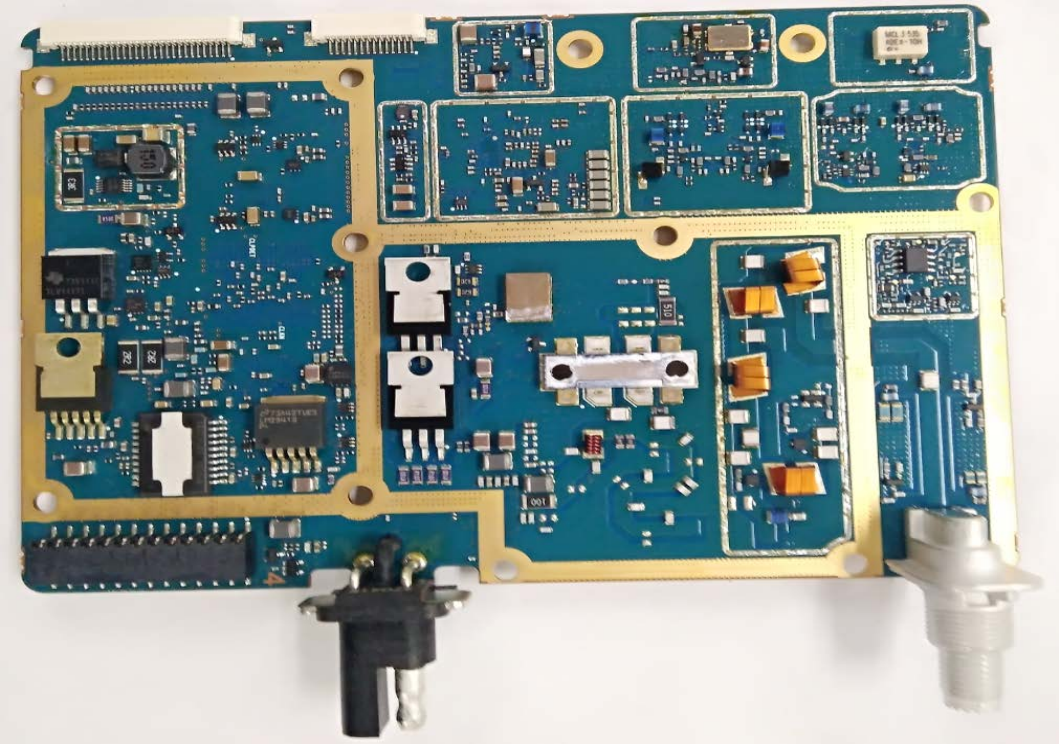

RF board without Shields (Top)

Exhibit 9C

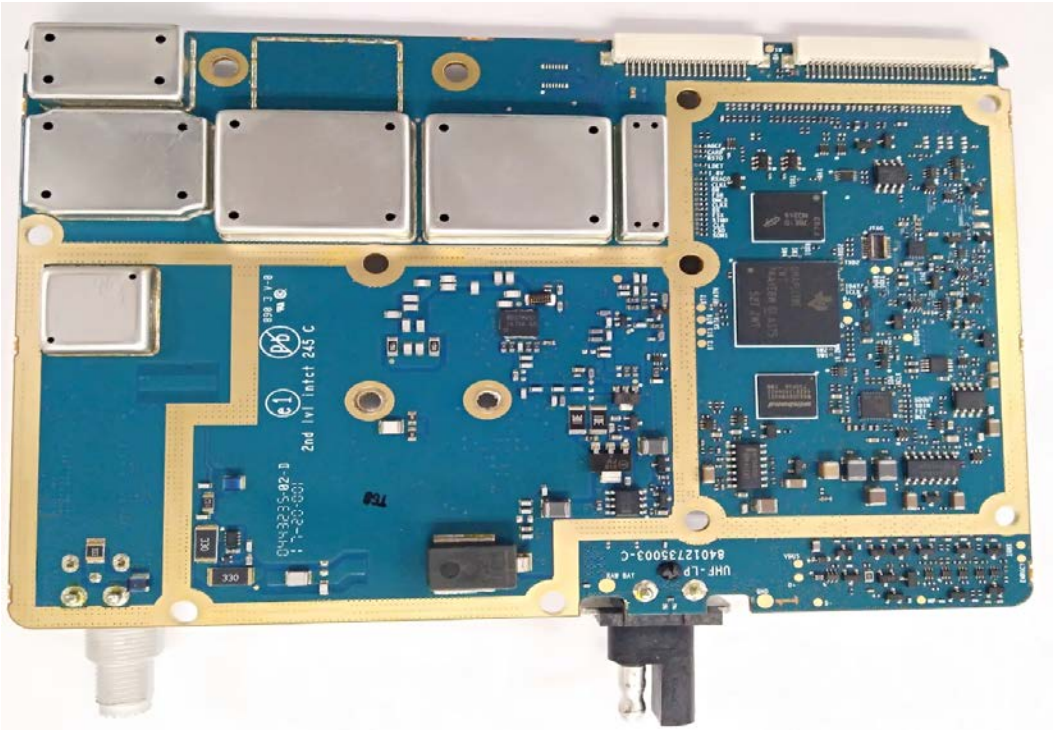

RF board with Shields (Bottom)

Exhibit 9D

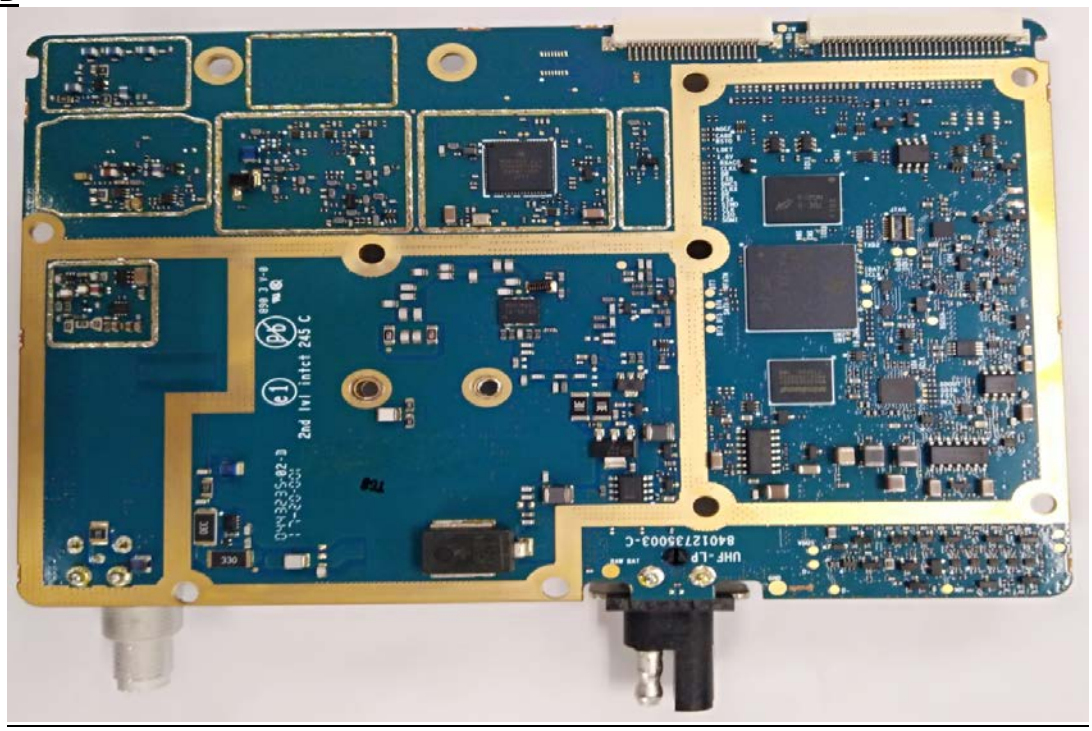

RF board without Shields (Bottom)

Exhibit 9E

RF boards with chassis and control head (Top)
(XPR5550e)

Exhibit 9F

Chassis and control head (Bottom)
(XPR5550e)

Exhibit 9G

RF boards <u>with</u> chassis and control head (Top)
(XPR5350e)

Exhibit 9H

Chassis and control head (Bottom)
(XPR5350e)

Exhibit 9I

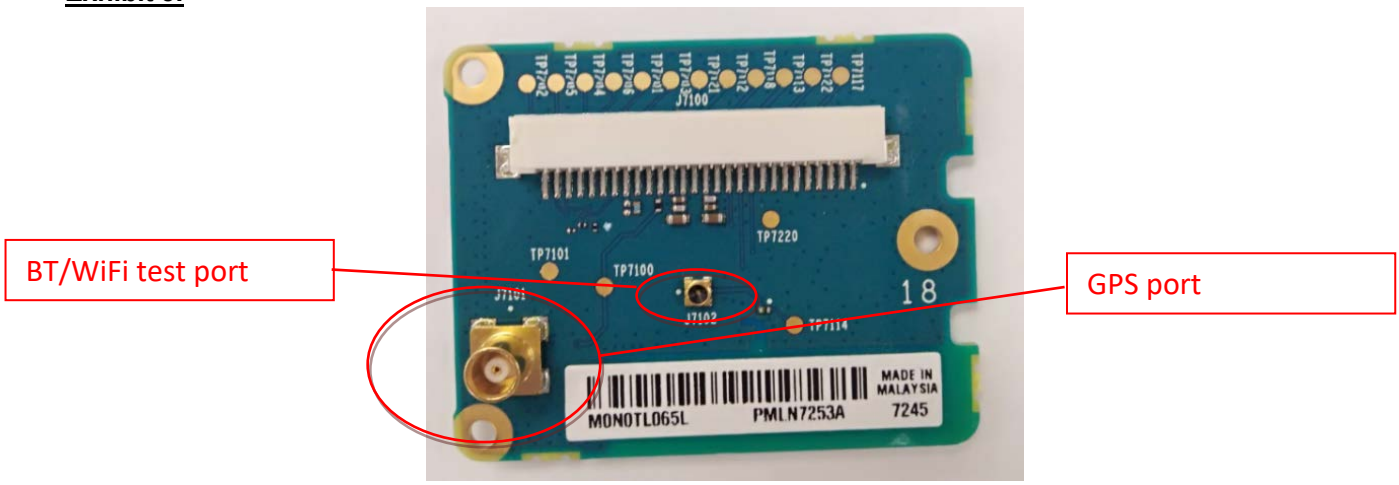

Wifi/GPS/BT board (Top)

Exhibit 9J

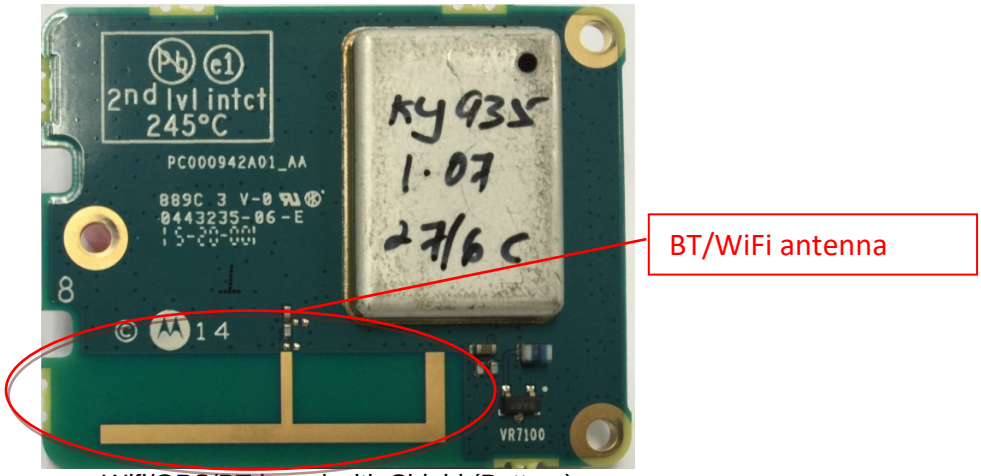

Wifi/GPS/BT board with Shield (Bottom)

Exhibit 9K

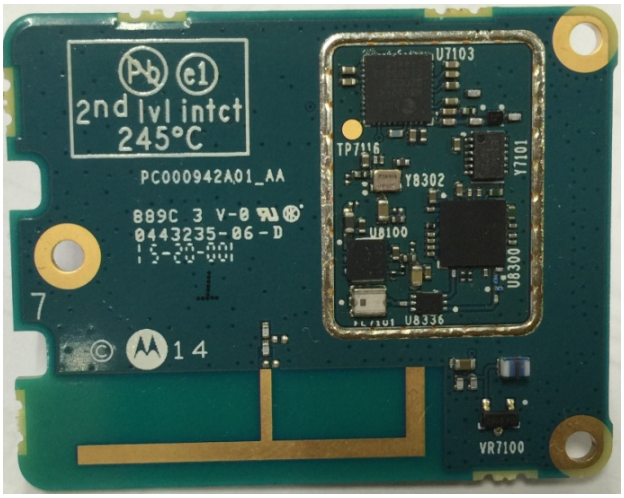

Wifi/GPS/BT board without Shield (Bottom)

Exhibit 9L

GOB board (Top)

Exhibit 9M

GOB board <u>with</u> Shield (Bottom)

Exhibit 9N

GOB board <u>without</u> Shield (Bottom)

Exhibit 9O

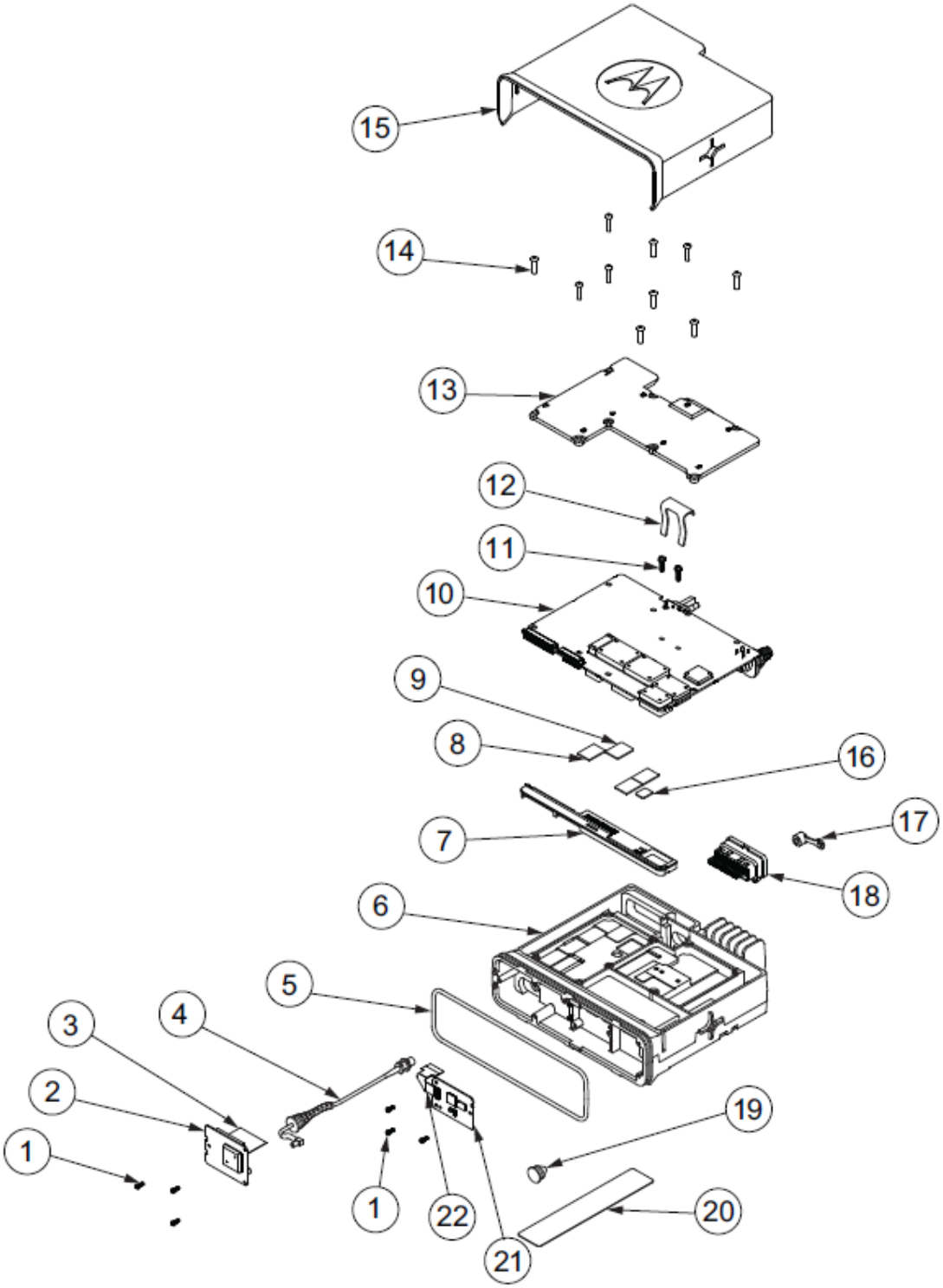

Exploded View of Radio

Exhibit 9P

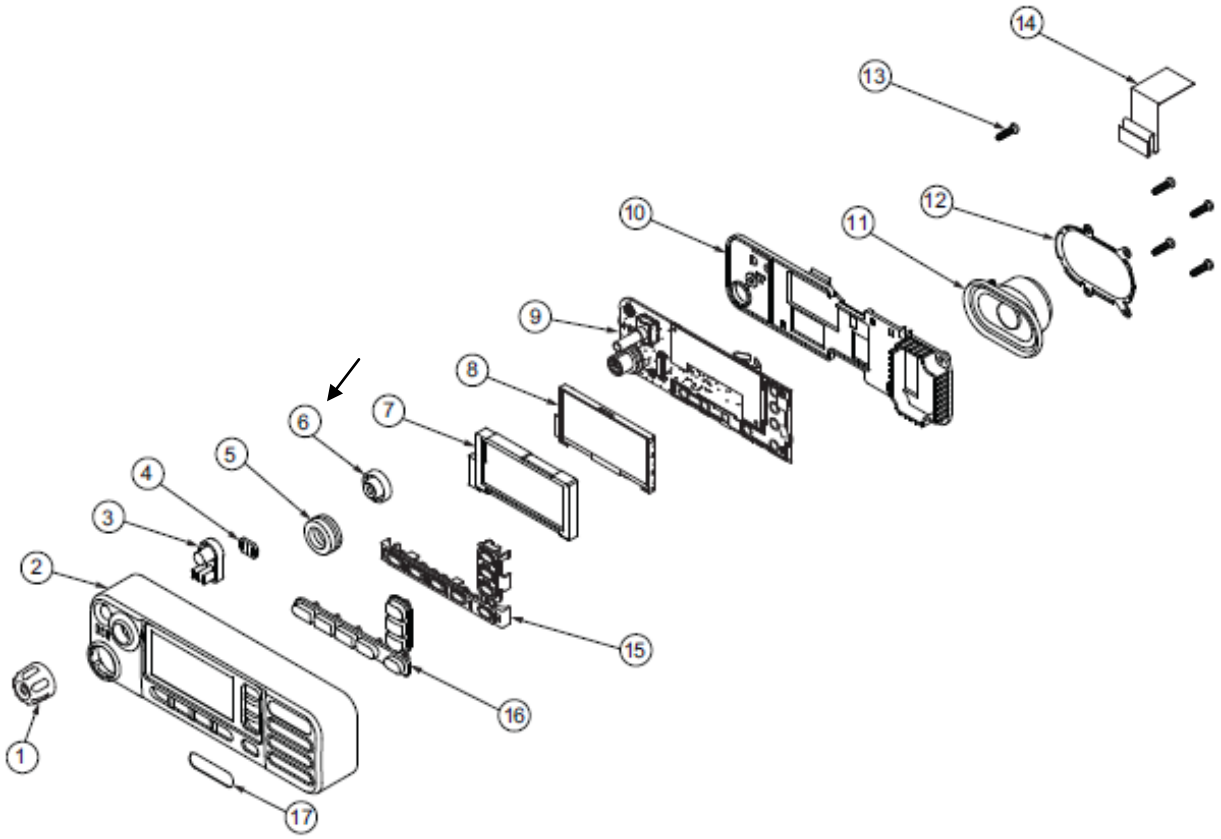

Exploded view of colour display control head

Exhibit 9Q

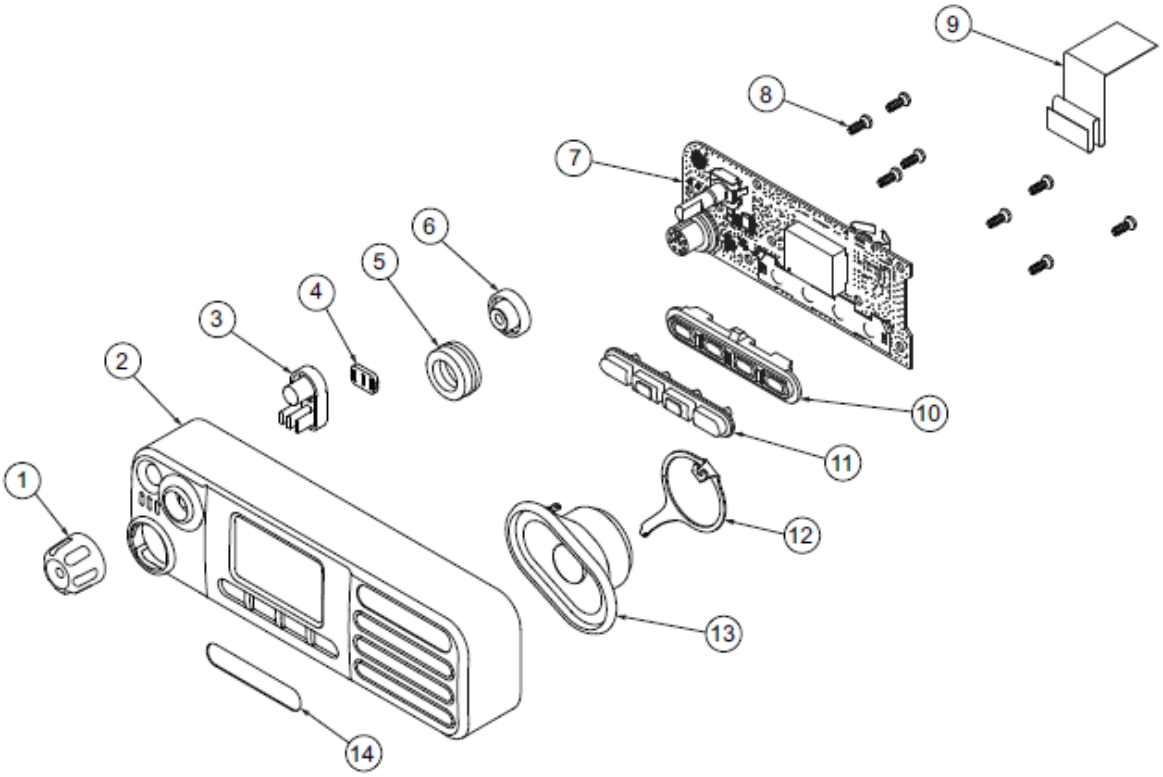

Exploded view of numeric display control head