MOTOROLA SOLUTIONS

MS ISO/IEC 17025
TESTING
SAMM No. 0825

MOTOROLA PENANG ADV. COMM. LABORATORY
Motorola Solutions Malaysia Sdn Bhd
Innoplex Plot 2A, Medan Bayan Lepas,
Mukim 12 S.W.D, 11900 Bayan Lepas,
Penang, Malaysia.

FCC TEST REPORT
Report Revision : Rev.B

Date/s Tested	:	28-OCT-2016 – 19-DEC-2017
Report Issue Date	:	19-DEC-2017
Manufacturer/Location	:	Motorola Solutions Malaysia Sdn Bhd
Requestor	:	Low Yoong Sing
Product Type	:	Mobile
Model Number	:	AAM28JNN9RA1AN
Frequency Band	:	136-174 MHz
Low / Max RF Output Power	:	1 Watts / 25 Watts
Applicant Name	:	Motorola Solutions Malaysia Sdn Bhd
Applicant Address	:	Innoplex Plot 2A, Medan Bayan Lepas, Mukim 12 S.W.D, 11900 Bayan Lepas, Penang, Malaysia
FCC Registrations	:	772092
IC Registrations	:	109AK

The equipment was tested accordance to the requirement listed below:

(LMR)
FCC 47 CFR Part 22 / 74 **PASS**

This report shall not be reproduced without written approval from an officially designated representative of the Motorola Penang Adv. Comm. Laboratory. The results and statements contained in this report pertain only to the device(s) evaluated.

Prepared By:

Song Zhi Wei
Test Personnel

Approved By:

Vincent Foong
Responsible Engineer

Table of Contents

Report Revision History 3
1.0 General Information 4
2.0 Summary of Test Results 5
3.0 Measurement Uncertainty 5
4.0 Equipment List 6
5.0 Test Condition 7
5.1. Transmitter Test Conditions 7
6.0 Transmitter Test Parameters 8
6.1. RF Output Power 8
6.1.1. Test Setup 8
6.1.1. Test Result 8
6.2. Frequency Stability 9
6.2.1. Test Setup 9
6.2.2. Test Result 9
6.2.3. Test Limit 9
6.3. Audio Frequency Response 10
6.3.1. Test Setup 10
6.3.2. Test Result 10
6.3.3. Test Limit 10
6.4. Audio Low Pass Filter Response 11
6.4.1. Test Setup 11
6.4.2. Test Result 11
6.4.3. Test Limit 12
6.5. Modulation Limiting 13
6.5.1. Test Setup 13
6.5.2. Test Result 13
6.5.3. Test Limit 13
6.6. Occupied Bandwidth 14
6.6.1. Test Setup (Analog) 14
6.6.2. Test Result (Analog) 15
6.6.3. Test Setup (Digital) 16
6.6.4. Test Result (Digital) 17
6.6.5. Test Limit 17
6.7. Band Edge Conducted Spurious Emission (Part 22) 18
6.7.1. Test Setup (Analog) 18
6.7.2. Test Result (Analog) 19
6.7.3. Test Setup (Digital) 21
6.7.4. Test Result (Digital) 22
6.7.5. Test Limit 22
6.8. Transient Frequency Behavior 23
6.8.1. Test Setup 23
6.8.2. Test Result 24
6.8.3. Test Limit 24

6.9. Adjacent Channel Power 25
6.9.1. Test Setup (Analog) 25
6.9.2. Test Result 26
6.9.3. Test Setup (Digital) 26
6.9.4. Test Result 26
6.9.5. Test Limit 27
6.10. Conducted Spurious Emission 29
6.10.1. Test Setup 29
6.10.2. Test Result (Analog) 30
6.10.1. Test Result (Digital) 34
6.10.2. Test Limit 36
6.11. Radiated Spurious Emission 37
6.11.1. Test Setup 37
6.11.2. Test Result (Analog) 38
6.11.3. Test Result (Digital) 44
6.11.4. Test Limit 46
6.12. Effective Radiated Power (ERP) / GNSS (EIRP for 1559 - 1610MHz) 47
6.12.1. Test Setup 47
6.12.2. Test Result 47
6.12.3. Test Limit 47
6.13. AC Power Line Conducted Spur Emissions 48
6.13.1. Test Setup 48
6.13.2. Test Result 48
6.13.3. Test Limit 49

Report Revision History

Revision History	Description	Date	Originator
Rev. A	Initial Report	06-APR-2017	Edmond Too
Rev. B	Amended Section 6.7.4.	19-DEC-2017	Song Zhi Wei

1.0 General Information

EUT Description:

Technologies	Land Mobile Radio (LMR)
Modulation Type	Analog, 4FSK

General Description of Applied Standards
The EUT is a RF Product. According to the specifications of the manufacturer, the EUT is to comply with the requirements of the following standards:

ANSI/TIA/-603-D
ANSI C63.4.2014
TIA-102 CCAA-A
TIA-102 CAAB-D
TIA-102 CAAA-D
ANSI C63.26-2015

2.0 Summary of Test Results

FCC General Rules Part (47CFR)	IC General Rules Part	Test Item	Result
-	-	RF Power Output	NA
-	-	Frequency Stability	NA
-	-	Audio Frequency Response	NA
-	-	Audio Low Pass Filter Response	NA
-	-	Modulation limiting	NA
22.359, 74.462(b)	-	Occupied Bandwidth	Pass
22.359(a),(b)	-	Band Edge Conducted Spurious Emission	Pass
-	-	Transient Frequency Behavior	NA
-	-	Adjacent Channel Power	NA
22.359,74.462(c)	-	Conducted Spurious Emissions	Pass
22.359,74.462(c)	-	Radiated Spurious Emission	Pass
-	-	GNSS (EIRP for 1559 – 1610MHz)	NA
-	-	Effective Radiated Power (ERP)	NA
-	-	AC Power Line Conducted Spurious Emission	NA

NA → **Not Applicable**

3.0 Measurement Uncertainty

Measurement	Frequency	Expended Uncertainty (k=1.96) (±)
AC Power Line Conducted Spurious Emission	150KHz ~ 30MHz	3.43
Radiated Emissions up to 1 GHz	30MHz ~ 200MHz	5.01
	200MHz ~ 1000MHz	5.01
Radiated Emissions above 1 GHz	1GHz ~ 18GHz	5.01
	18GHz ~ 25GHz	5.01

4.0 Equipment List

FCC Transient ATE #1: (SW Version: FCC Transient ATE_R 1.0.3)

Description	Model	Serial Number	Calibration Date	Calibration Due Date
POWER SUPPLY	6032A	2818A03549	11-May-17	11-May-18
POWER SENSOR	E4412A	MY41498918	9-May-17	9-May-18
POWER METER	E4416A	MY45101016	11-Jan-17	11-Jan-18
ATTENUATORS/SWITCH DRIVER	11713A	2508A10141	CNR	CNR
STEP ATTENUATOR/11dB	8494G	MY52300223	9-May-17	9-May-18
STEP ATTENUATOR/110dB	8496G	MY52300176	9-May-17	9-May-18
OSCILLOSCOPE	MSO8064A	MY45001903	25-May-17	25-May-18
AUDIO ANALYZER	8903B	3729A17409	2-May-17	2-May-18
AUDIO ANALYZER	8903B	3011A08952	2-May-17	2-May-18
MODULATION ANALYZER	8901B	3019A02766	4-Mar-17	4-Mar-18
SIGNAL GENERATOR	8657A	3323A05725	2-May-17	2-May-18
SPECTRUM ANAYLYZER	E4440A	MY46185415	16-Aug-17	16-Aug-19
SWITCH CONTROL UNIT	-	-	CNR	CNR

Conducted Spurious Emission ATE # 1: (SW Version: Conducted Spur ATE_rev 1.22.06)

Description	Model	Serial Number	Calibration Date	Calibration Due Date
SWITCH CONTROL UNIT	3488A	2719A32735	CNR	CNR
SPECTRUM ANALYZER	E4445A	MY4618732	16-Feb-17	19-Feb-19
POWER SUPPLY	6032A	3319A08920	19-Apr-16	19-Apr-17
HIGH PASS FILTER SWITCH BOX	CS	CS001	25-Aug-16	25-Aug-17
MICROWAVE GENERATOR	SMP02	830682/015	18-Oct-16	18-Oct-17
MODULATION ANALYZER	8901B	3438A05278	12-Apr-16	12-Apr-17

Radiated Emission Station: (SW Version: EMC_FCC_IC_BT_RE_V 1.5.0)

Description	Model	Serial Number	Calibration Date	Calibration Due Date
DRG HORN FREQ.	SAS-571	1143	10-Nov-14	10-Nov-16
DRG HORN FREQ.	SAS-571	719	28-Apr-15	28-Apr-17
BILOG ANTENNA	CBL6112B	2964	23-Jan-15	23-Jan-17
POWER SUPPLY	6031A	3121A02341	24-Feb-15	24-Feb-17
MICROWAVE SIGNAL GENERATOR	SMP04	100131	4-Jul-16	4-Jul-17
TEST RECEIVER	ESIB04	100264	1-Jul-16	1-Jul-17
SIGNAL ANALYZER	FSV40	101103	25-Jun-16	25-Jun-17
5m SEMI-ANECHOIC CHAMBER	S800-HX	J2308	29-Jul-16	29-Jul-17
BILOG ANTENNA	CBL6112D	25516	23-Jan-16	23-Jan-17
BROAD-BAND HORN ANTENNA	BBHA9170	BBHA9170143	24-Nov-14	24-Nov-16
DATA LOGGER	TM320	12249289	27-Apr-16	27-Apr-17
POWER SUPPLY	6032A	3232A08417	20-Apr-15	20-Apr-17
SYSTEM CONTROLLER	SC104V	050806-1	CNR	CNR
TURNTABLE FLUSH MOUNT 2M	FM2011	NA	CNR	CNR
ANTENNA POSITIONING TOWER	TLT2	NA	CNR	CNR
18 - 40GHz PREAMPLIFIER	BBV9721	9721-007	CNR	CNR
PREAMPLIFIER	PAM-0118	427	CNR	CNR

CNR → Calibration Not Required

5.0 Test Condition

5.1. Transmitter Test Conditions

Test Item, (Channel Spacing)	Temperature (°C)	Voltage Supply (V)	Power (W)	Modulation	Test Frequency (MHz)
RF Output Power	25°C	Nominal	Low / Max	Analog	NA
Frequency Stability	-30°C ~ 60°C	80% ~ 120% of Nominal Volt	Max	Analog	NA
Audio Frequency Response (12.5kHz / 25kHz)	25°C	Nominal	Max	Analog	NA
Audio Low Pass Filter Response (12.5kHz / 25kHz)	25°C	Nominal	Max	Analog	NA
Modulation limiting (12.5kHz / 25kHz)	25°C	Nominal	Max	Analog	NA
Occupied Bandwidth (12.5kHz / 20kHz / 25kHz)	25°C	Nominal	Max	Analog, Digital	161.700
Band Edge Conducted Spurious Emission (12.5kHz / 20kHz / 25kHz)	25°C	Nominal	Max	Analog, Digital	157.770, 158.670
Transient Frequency Behavior *(UHF & VHF Band)* (12.5kHz / 25kHz)	25°C	Nominal	Max	Analog, Digital	NA
Adjacent Channel Power *(700MHz Band)* (12.5kHz / 25kHz)	25°C	Nominal	Max	Analog, Digital	NA
Conducted Spurious Emissions (12.5kHz / 20kHz / 25kHz)	25°C	Nominal	Low / Max	Analog, Digital	161.700, 138.0125, 173.3875
Radiated Spurious Emission (12.5kHz / 25kHz)	25°C	Nominal	Low / Max	Analog, Digital	161.700, 138.0125, 173.3875
GNSS *(700MHz Band)* (EIRP for 1559-1610MHz) (12.5kHz / 25kHz)	25°C	Nominal	Max	Analog	NA
Effective Radiated Power (ERP) *(700MHz & 900MHz Band)* (12.5kHz / 25kHz)	25°C	Nominal	Max	Analog	NA
AC Power Line Conducted Spurious Emissions* (12.5kHz)	25°C	Nominal	Max	Analog	NA

*** – ONLY tested if portables can be operated during charging OR mobiles can be used in desktop operation connected to a power supply**

NA → Not Applicable

6.0 Transmitter Test Parameters

6.1. RF Output Power

6.1.1. Test Setup

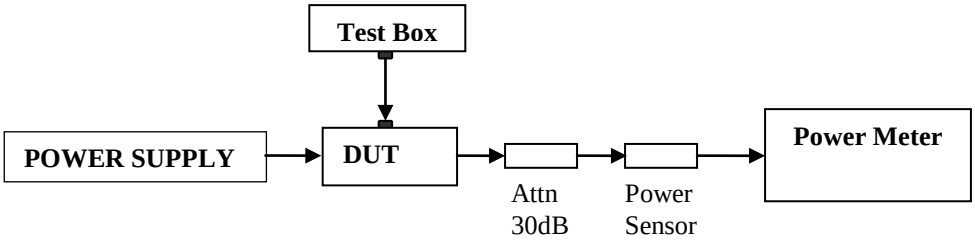

1) The DUT transmitter connected to Power Meter using the 30 dB attenuator and power sensor with above setup.
2) Path loss for the measurement included.
3) All the measurement was done at low, mid, high frequency for each band.
4) Record the power into the test report.

6.1.1. Test Result

Not Applicable

6.2. Frequency Stability

6.2.1. Test Setup

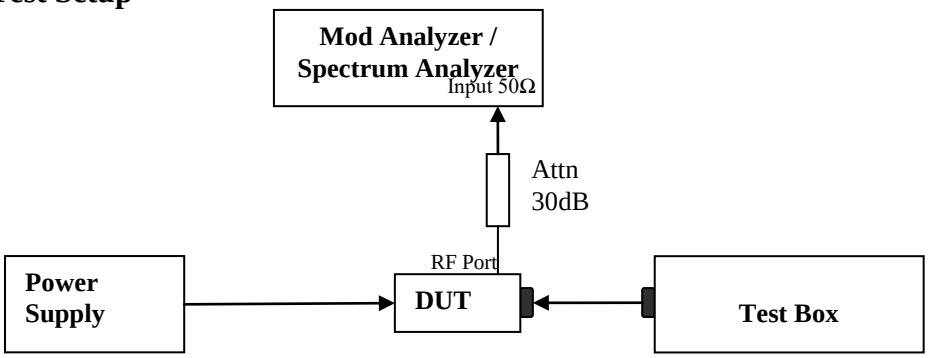

1) The DUT transmitter output port was connected to Modulation Analyzer.
2) Path loss for the measurement included.
3) Transmit the DUT and record the freq in MCF_{MHz}.
4) Test in 2 conditions: Different Temperature & Supply Voltage input.
   - Temperature: Vary voltage per test condition in Clause 5.1
   - Supply Voltage: Vary temperature per test condition in Clause 5.1
5) Calculate the ppm frequency error by the following:

$$ppm\ error = \left(\frac{MCF_{MHz}}{ACF_{MHz}} - 1\right) * 10^6$$

Where: MCF_{MHz} is the Measured Carrier Frequency in MHz
ACF_{MHz} is the Assigned Carrier Frequency in MHz

6.2.2. Test Result

Not Applicable

6.2.3. Test Limit

Not Applicable

6.3. Audio Frequency Response

6.3.1. Test Setup

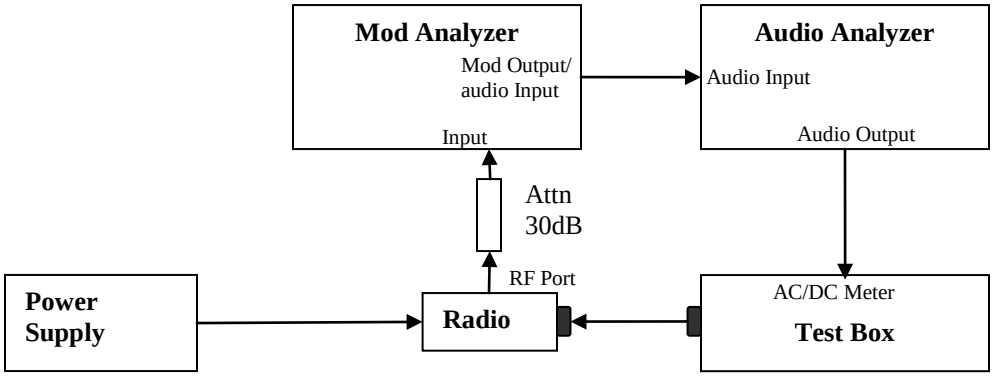

1) The DUT transmitter output port was connected to Modulation Analyzer.
2) Path loss for the measurement included.
3) Set the audio bandwidth filter to 15 kHz and 50 kHz.
4) Transmit the radio and set the audio analyzer to 1 kHz audio frequency and 20% of the maximum deviation.
5) On audio analyzer, set the rated level as reference to zero.
6) Vary the audio frequency from 300 Hz to 3 kHz. Record the change in dB on the audio analyzer.

6.3.2. Test Result

Not Applicable

6.3.3. Test Limit

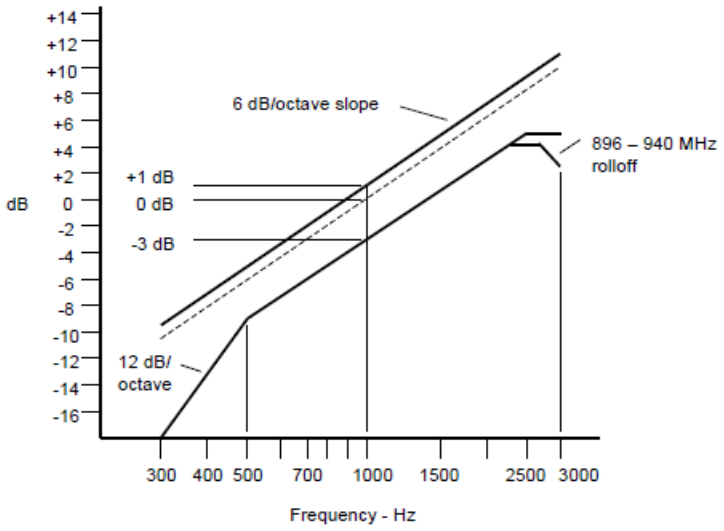

Note:

- *There are additional 6 dB per octave attenuation is allowed from 2.5KHz to 3KHz in equipment 25MHz to 869MHz radio.*
- *Additional 6 dB per octave attenuation is allowed from 2.3KHz to 2.7KHz & additional 12 dB per octave attenuation is allowed from 2.7KHz to 3KHz in equipment 896MHz to 940MHz radio.*

6.4. Audio Low Pass Filter Response

6.4.1. Test Setup

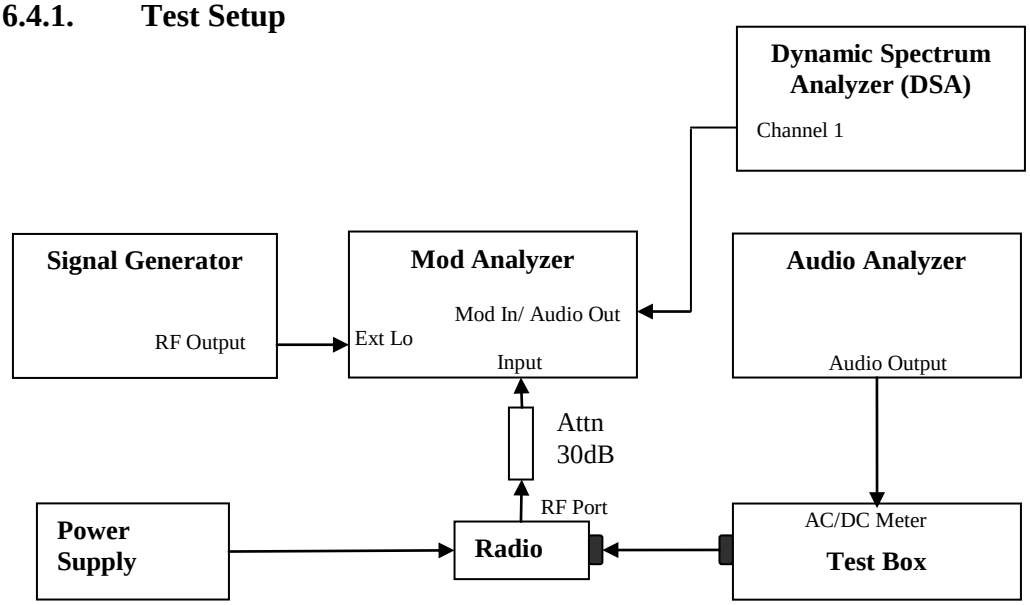

1) The DUT transmitter output port was connected to Modulation Analyzer.
2) Path loss for the measurement included.
3) Press 23.1SPCL on modulation analyzer to enable the external LO from Sigen.
4) Set the Sigen frequency to Fc + 1.5 MHz, RF output level to 0dBm without modulation.
5) Transmit the radio and set the audio analyzer to 1 kHz audio frequency and 60% of the maximum deviation.
6) Up the amplitude by 20dB.
7) On DSA, get the reference point to 0dB.
8) Vary the frequency on audio analyzer from 3 kHz to 20 kHz, record the audio tone from DSA.

6.4.2. Test Result

Not Applicable

6.4.3. Test Limit

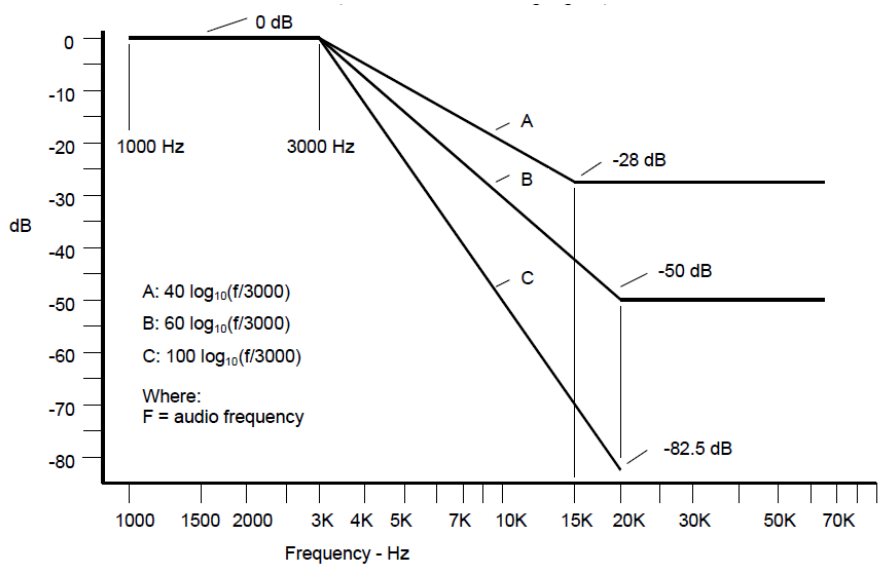

For audio frequencies above 3000 Hz, the audio response of the post limiter low-pass filter shall meet or exceed the following requirements:

a) For equipment operating on 20, 25 or 30 kHz channel bandwidth in the 25 MHz to 174 MHz range:

At frequencies from 3000 Hz through 15,000 Hz the attenuation shall be greater than the attenuation at 1000 Hz by at least: 40 $\log_{10}(f / 3000)$ dB

where: f is the audio frequency in Hz.

At frequencies above 15,000 Hz, the attenuation shall be greater than the attenuation at 1000 Hz, by at least: 28 dB.

b) For equipment operating with 25 kHz bandwidth channels between 406 and 512 MHz through 896 MHz, and between 929 MHz through 930 MHz:

At frequencies from 3000 Hz through 20,000 Hz, the attenuation shall be greater than the attenuation at 1000 Hz by at least: 60 $\log_{10}(f / 3000)$ dB

where: f is the audio frequency in Hz.

At frequencies above 20,000 Hz the attenuation shall be greater than the attenuation at 1000 Hz by at least: 50 dB.

c) For equipment operating on channels between 896 MHz through 901 MHz, between 935 MHz through 940 MHz, and 12.5 or 15 kHz spaced channels in the frequency range 138-174 MHz and 406-512 MHz.

At frequencies from 3000 Hz through 20,000 Hz the attenuation shall be greater than the attenuation at 1000 Hz by at least: 100 $\log_{10}(f / 3000)$ dB

where: f is the audio frequency in Hz.

6.5. Modulation Limiting

6.5.1. Test Setup

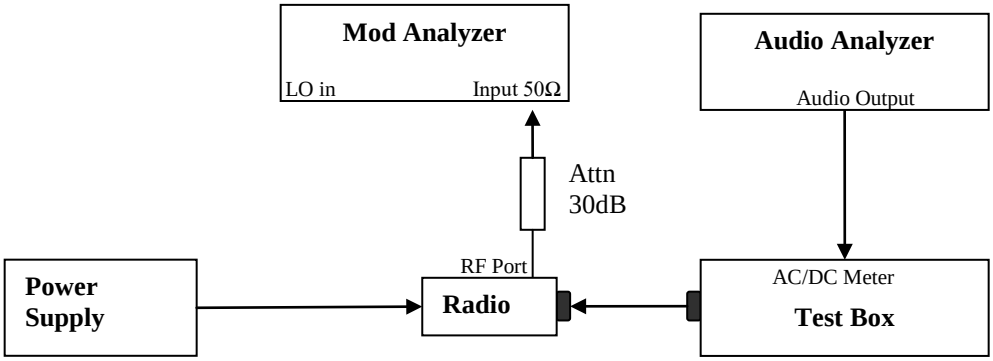

1) The DUT transmitter output port was connected to Modulation Analyzer.
2) Path loss for the measurement included.
3) Set the audio bandwidth filter to 15 kHz.
4) Transmit the radio and set the audio analyzer to 1 kHz audio frequency and 60% of the maximum deviation.
5) Record the frequency deviation as 0dB input level at 1kHz audio frequency.
6) Repeat the step and record the frequency deviation from -20 dB to 20dB by 5 dB increments and different audio freq 300 Hz, 2.5 kHz and 3 kHz.

6.5.2. Test Result

Not Applicable

6.5.3. Test Limit

Modulation shall not exceed 100 percent if amplitude modulation is employed.

6.6. Occupied Bandwidth

6.6.1. Test Setup (Analog)

A. Get Fc for reference

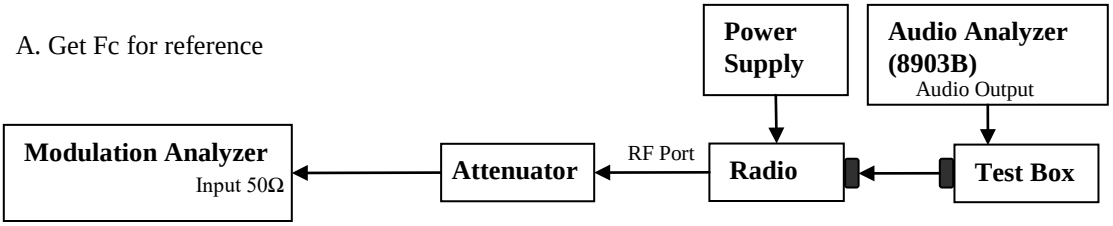

B. Testing

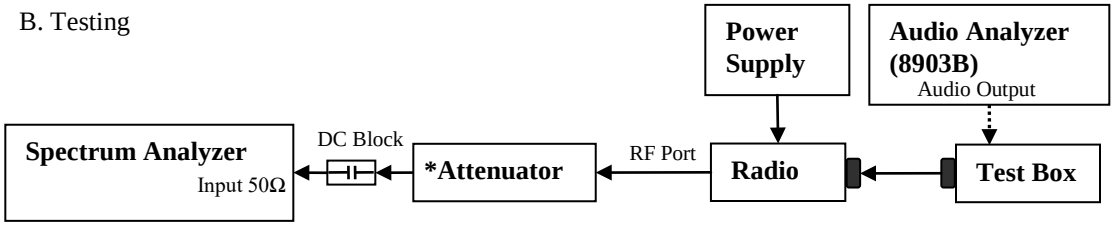

1) The DUT transmitter output port was connected to Modulation Analyzer.
2) Set the audio bandwidth filter to 15 kHz low pass filter and 50 kHz high pass filter.
3) Transmit the radio and set the audio analyzer to 2.5 kHz audio frequency and 50% of the rated deviation. Up the amplitude by 16 dB. Dekey the DUT.
4) Path loss for the measurement included.
5) Select the Occupied Bandwidth measurement for 99% Bandwidth Measurement.
6) Key in the Fc and Resolution Bandwidth (1 ~ 5 % of emission designator).
7) Transmit the DUT and record the occupied Bandwidth frequency.
8) Preset the spectrum analyzer for sideband spectrum measurement.
9) Set the span to 100 KHz and Resolution Bandwidth (according to FCC/ ISED standard).
10) Save the screen shot as modulated signal
11) Remove the audio tone from audio analyzer to capture unmodulated signal.

* Only HPF added for Mask 80.211 measurement with attenuator.

6.6.2. Test Result (Analog)

Channel Freq (MHz)	Channel Spacing (kHz)	Mode	99% OCB (kHz)	Emission Designator
161.7000	12.5	Analog Voice	9.8356	11K0F3E

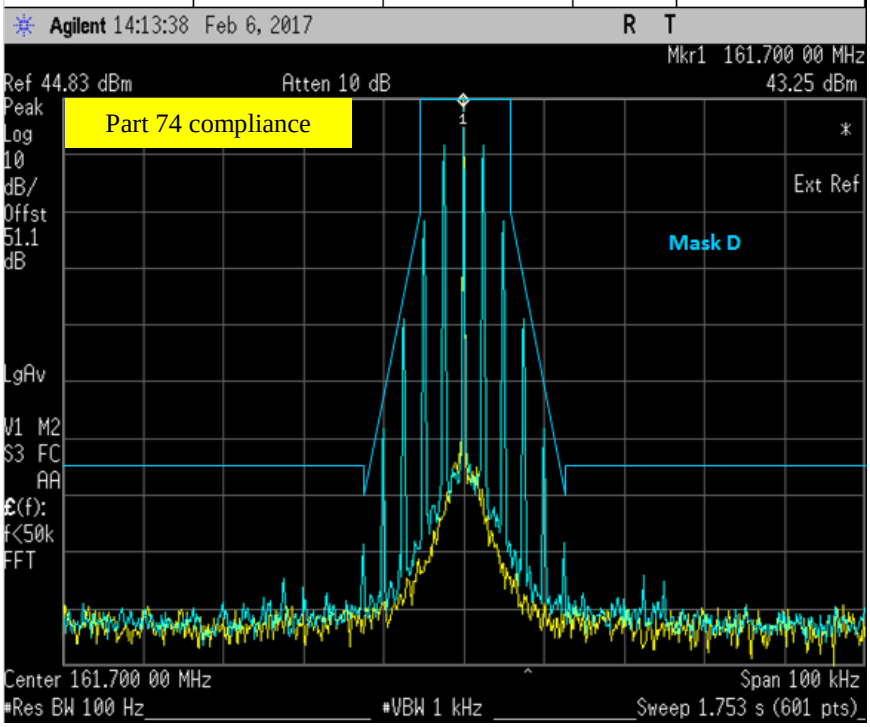

6.6.3. Test Setup (Digital)

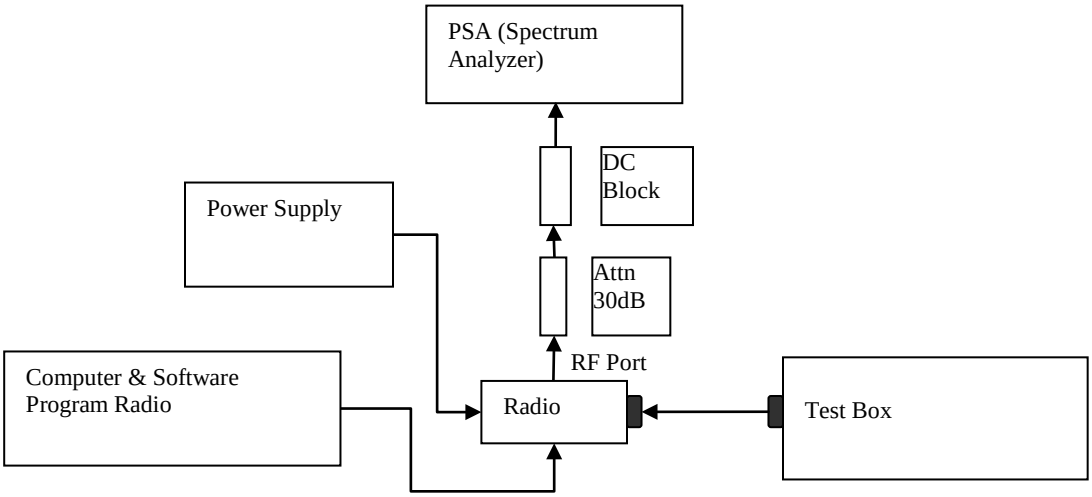

1) Program and set radio to operate in desire test frequency and digital mode with modulation. (4FSK, C4FM, CQPSK or other digital modulation form).
2) Path loss for the measurement included.
3) Select the Occupied Bandwidth measurement for 99% Bandwidth Measurement.
4) Key in the Fc and RBW (1 ~ 5 % of emission designator).
5) Transmit the DUT and record the occupied Bandwidth frequency.
6) Preset the spectrum analyzer for modulation emission spectrum measurement.
7) Set the span to 100 KHz and Resolution Bandwidth (according to FCC/ ISED standard). Capture the screen shot as modulated signal.

***Note: Emission designators 7K60FXD and 7K60FXE utilizes the same test pattern as 7K60F1E, 7K60F1D and are therefore identical. Hence, only the latter 2 plots are shown.**

6.6.4. Test Result (Digital)

Channel Freq (MHz)	Channel Spacing (kHz)	Mode	99% OCB (kHz)	Emission Designator
161.7000	12.5	digital data	6.8145	7K60F1D

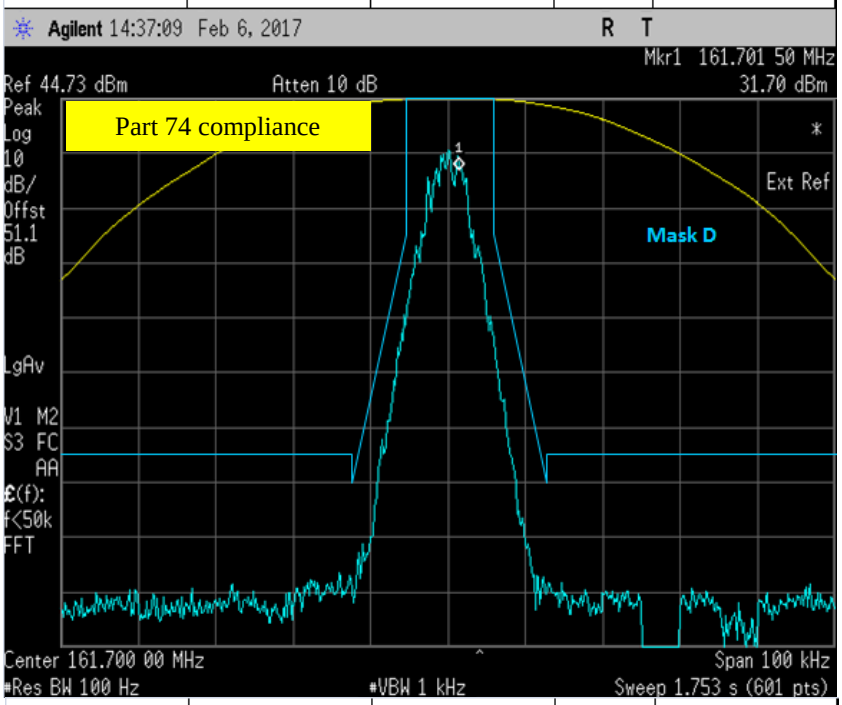

Channel Freq (MHz)	Channel Spacing (kHz)	Mode	99% OCB (kHz)	Emission Designator
161.7000	12.5	digital voice	7.3226	7K60F1E

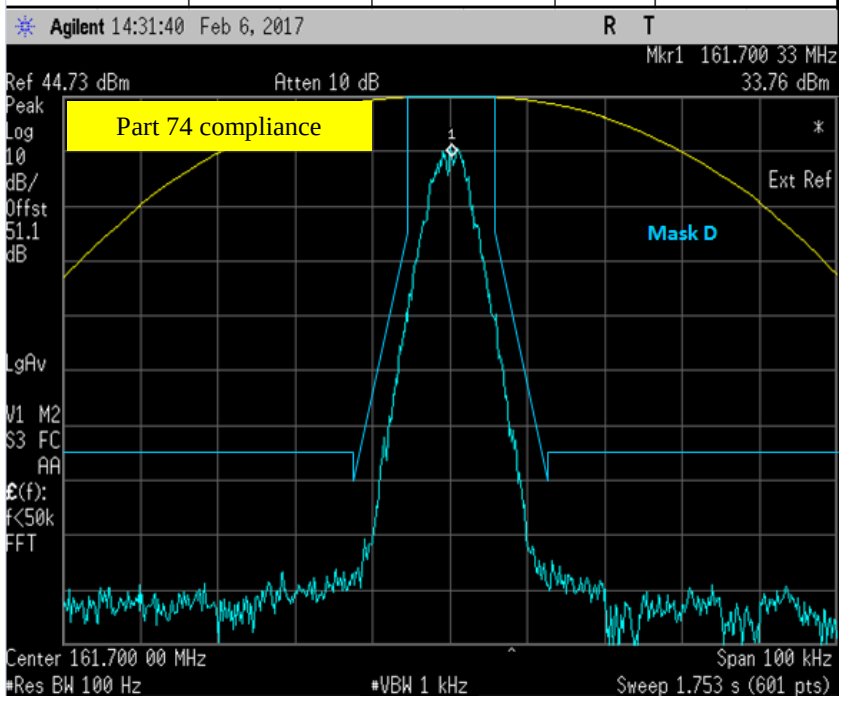

6.6.5. Test Limit

The 99% occupied bandwidth is the width of a frequency band such that, below the lower and above the upper frequency limits, the mean powers emitted are each equal to a specified percentage 0.5% of the total mean transmitted power.

6.7. Band Edge Conducted Spurious Emission (Part 22)

6.7.1. Test Setup (Analog)

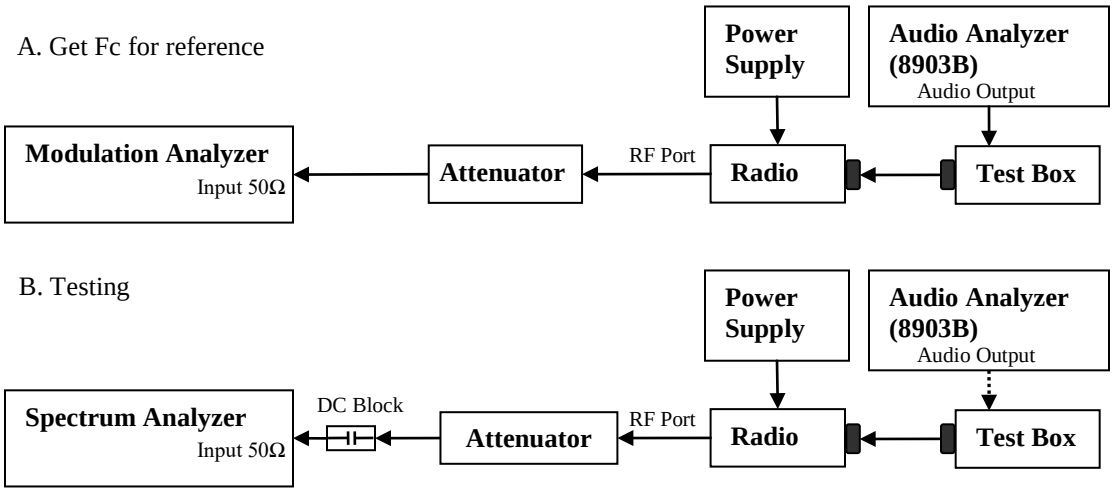

1) The DUT transmitter output port was connected to Modulation Analyzer.
2) Set the audio bandwidth filter to 15 kHz low pass filter and 50 kHz high pass filter.
3) Path loss for the measurement included.
4) Select the Occupied Bandwidth measurement for 99% and 26dB Emissions Bandwidth Measurement.
5) Key in the Fc and RBW= 100Hz.
6) Transmit the DUT and record the occupied Bandwidth frequencies.
7) Preset the spectrum analyzer for band edge measurement.
8) The band edges of lowest and highest channels were measured.
9) The center frequency of spectrum is the band edge frequency, span is 60 kHz and RBW is at least 1% of Emission Bandwidth.
10) Save the screen shot as modulated signal.
11) Remove the audio tone from audio analyzer to capture unmodulated signal.

6.7.2. Test Result (Analog)

<u>Analog:</u> 157.77, 158.670 MHz, 20.0 kHz Channel Spacing, Max Power

Channel Frequency (MHz)	Channel Spacing (kHz)	Mode	Emission Designator	99% OCB (kHz)	26 dB OCB (kHz)
157.770	20.0	Analog Voice	16K0F3E	10.3464	15.3560

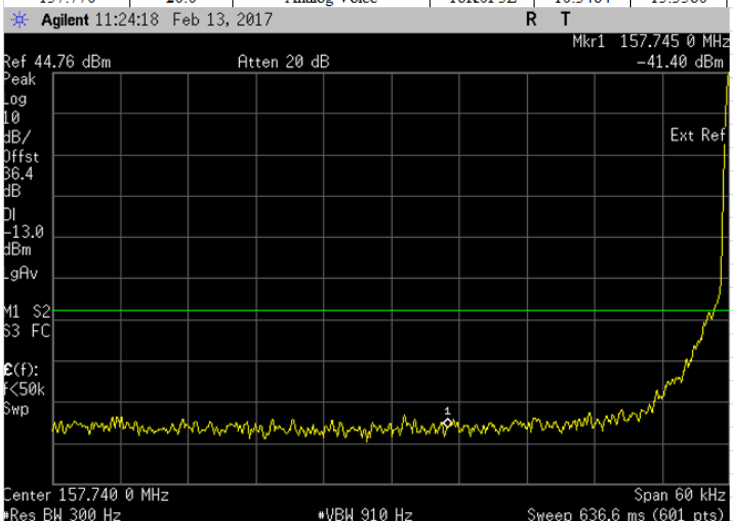

Channel Frequency (MHz)	Channel Spacing (kHz)	Mode	Emission Designator	99% OCB (kHz)	26 dB OCB (kHz)
158.670	20.0	Analog Voice	16K0F3E	10.3540	15.3680

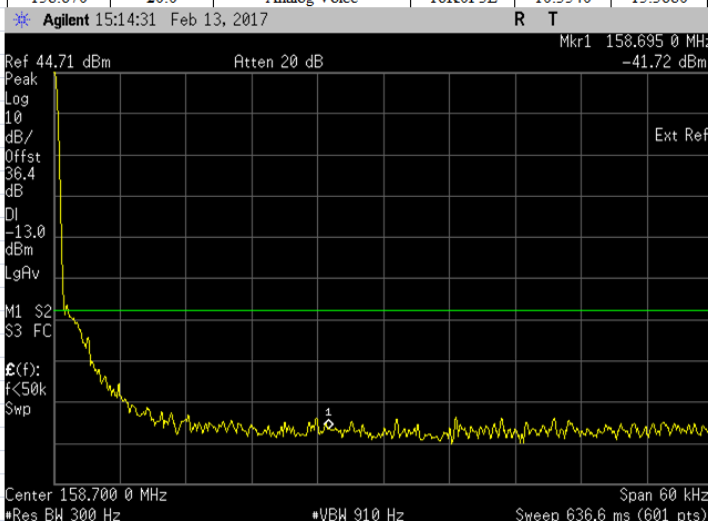

<u>Analog:</u> 157.77, 158.670 MHz, 25.0 kHz Channel Spacing, Max Power

Channel Frequency (MHz)	Channel Spacing (kHz)	Mode	Emission Designator	99% OCB (kHz)	26 dB OCB (kHz)
157.770	25.0	Analog Voice	16K0F3E	14.9206	15.5340

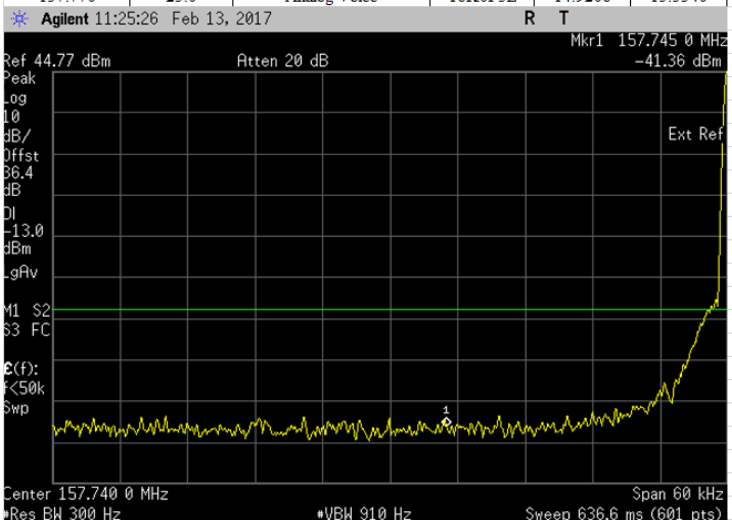

Channel Frequency (MHz)	Channel Spacing (kHz)	Mode	Emission Designator	99% OCB (kHz)	26 dB OCB (kHz)
158.670	25.0	Analog Voice	16K0F3E	14.9422	15.5380

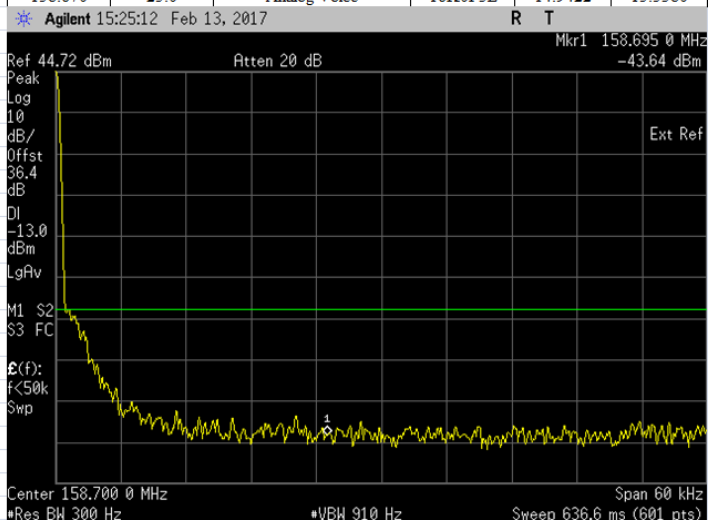

<u>Analog:</u> 157.77, 158.670 MHz, 20.0 kHz Channel Spacing, Low Power

Channel Frequency (MHz)	Channel Spacing (kHz)	Mode	Emission Designator	99% OCB (kHz)	26 dB OCB (kHz)
157.770	20.0	Analog Voice	16K0F3E	10.3464	15.3560

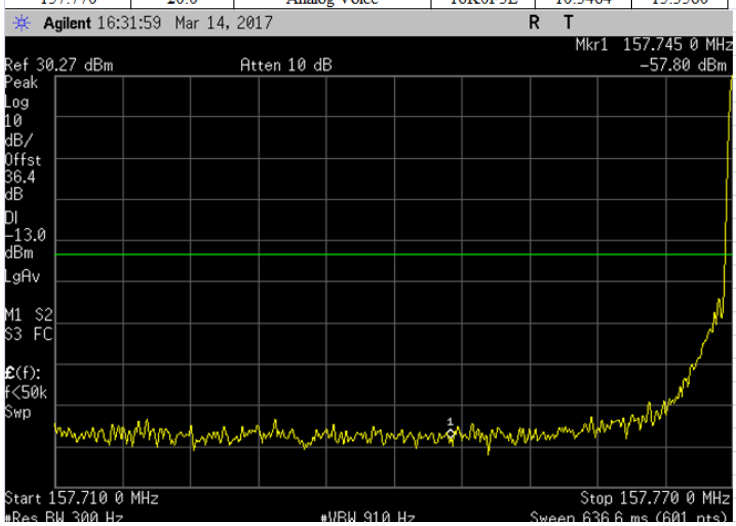

Channel Frequency (MHz)	Channel Spacing (kHz)	Mode	Emission Designator	99% OCB (kHz)	26 dB OCB (kHz)
158.670	20.0	Analog Voice	16K0F3E	10.3540	15.3680

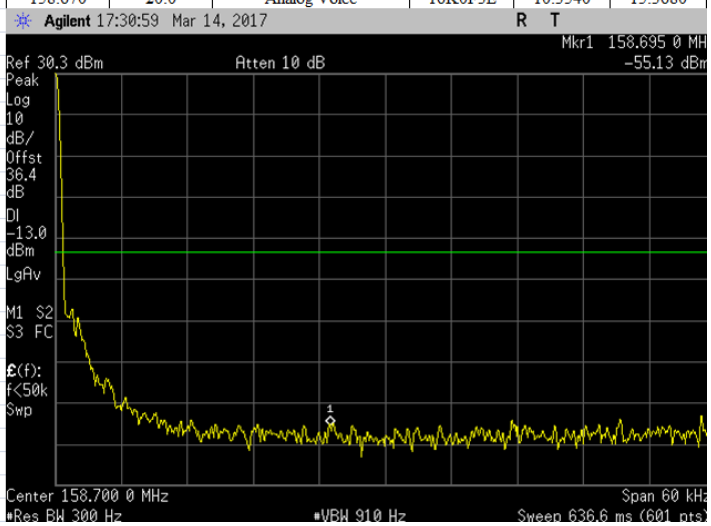

<u>Analog:</u> 157.77, 158.670 MHz, 25.0 kHz Channel Spacing, Low Power

Channel Frequency (MHz)	Channel Spacing (kHz)	Mode	Emission Designator	99% OCB (kHz)	26 dB OCB (kHz)
157.770	25.0	Analog Voice	16K0F3E	14.9206	15.5340

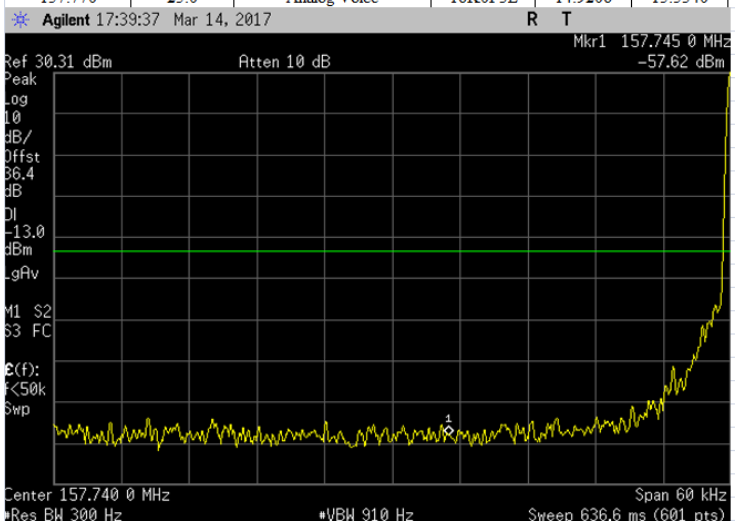

Channel Frequency (MHz)	Channel Spacing (kHz)	Mode	Emission Designator	99% OCB (kHz)	26 dB OCB (kHz)
158.670	25.0	Analog Voice	16K0F3E	14.9422	15.5380

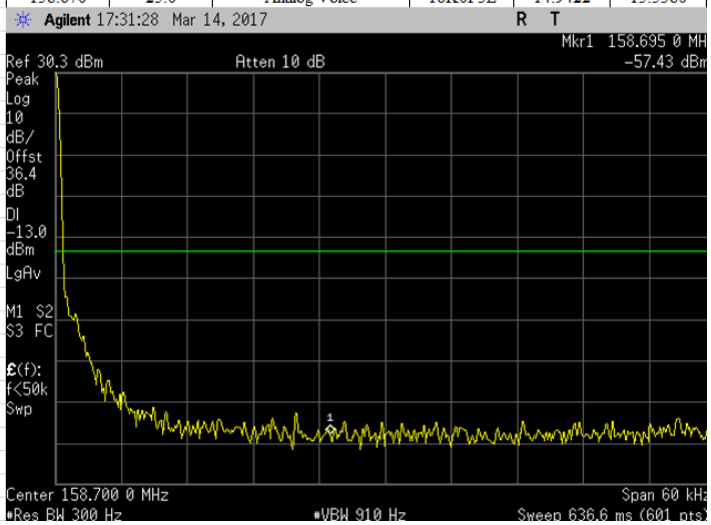

****Note:**
• Results for Analog Modulation Voice (F3E) with 12.5 kHz and 25 kHz would be the same. Therefore only measurements with 25kHz channel spacing is reported.

6.7.3. Test Setup (Digital)

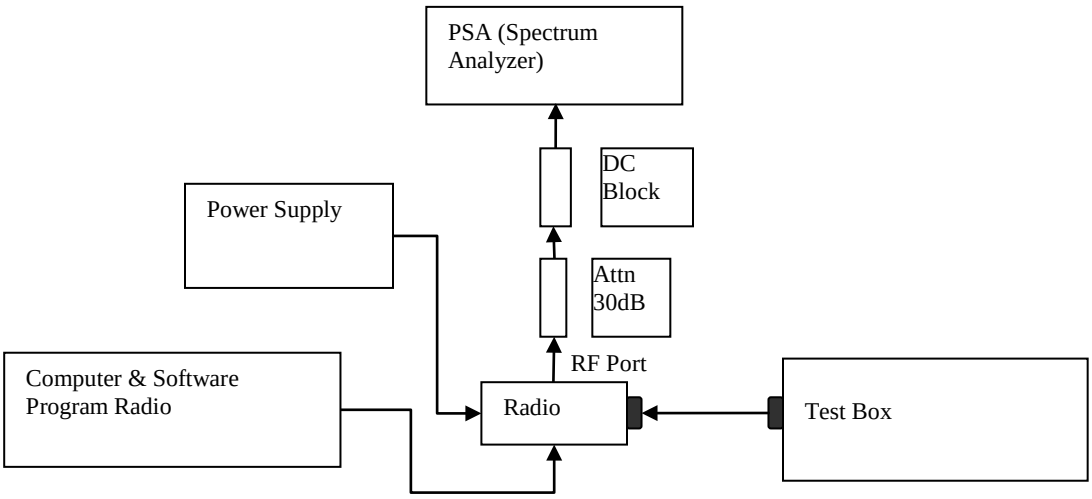

1) Program and set radio to operate in desire test frequency and digital mode with modulation. (4FSK**, C4FM or other digital modulation form).
2) Path loss for the measurement included.
3) Select the Occupied Bandwidth measurement for 99% and 26dB Emissions Bandwidth Measurement.
4) Key in the Fc and RBW= 100Hz.
5) Transmit radio record the occupied Bandwidth frequencies.
6) Preset the spectrum analyzer for band edge measurement.
7) The band edges of lowest and highest channels were measured.
8) The center frequency of spectrum is the band edge frequency, span is 60 kHz and RBW is at least 1% of Emission Bandwidth.
9) Save the screen shot.

*Note: Test patterns for all digital emissions (7K60F1E, 7K60F1D, 7K60F1W, 7K60FXE, 7K60FXW) are identical, hence only 7K60F1D is shown

6.7.4. Test Result (Digital)

4FSK: 157.77,158.67 MHz, 12.5 kHz Channel Spacing, Max Power

Channel Frequency (MHz)	Channel Spacing (kHz)	Mode	Emission Designator	99% OCB (kHz)	26dB OCB (kHz)
157.7700	12.5	Digital Data	7K60F1D	7.5193	9.7718

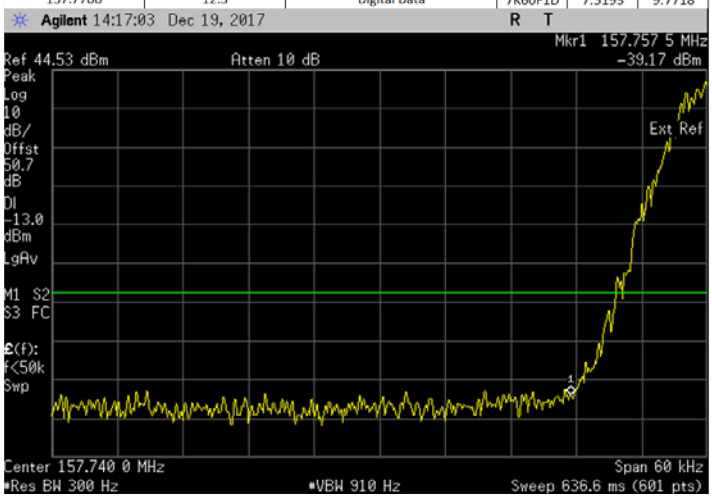

Channel Frequency (MHz)	Channel Spacing (kHz)	Mode	Emission Designator	99% OCB (kHz)	26dB OCB (kHz)
158.6700	12.5	Digital Data	7K60F1D	7.3284	10.0175

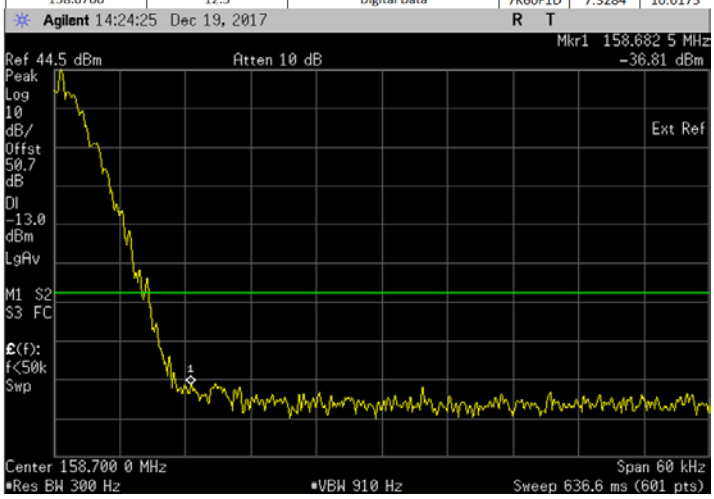

4FSK: 157.77,158.67 MHz, 12.5 kHz Channel Spacing, Low Power

Channel Frequency (MHz)	Channel Spacing (kHz)	Mode	Emission Designator	99% OCB (kHz)	26dB OCB (kHz)
157.7700	12.5	Digital Data	7K60F1D	7.2744	10.0111

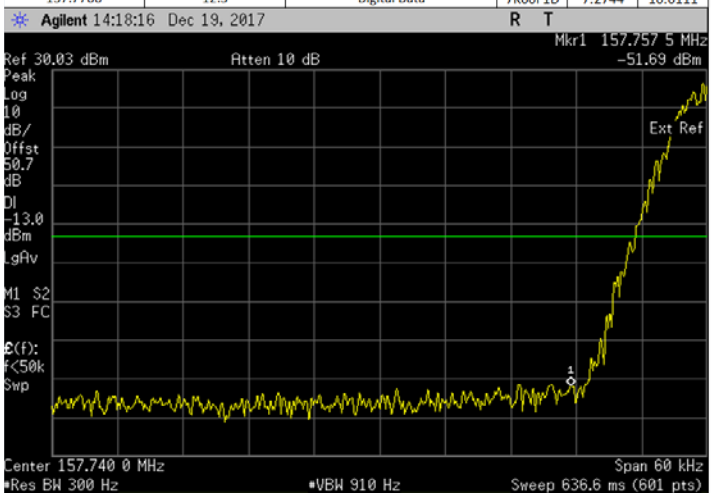

Channel Frequency (MHz)	Channel Spacing (kHz)	Mode	Emission Designator	99% OCB (kHz)	26dB OCB (kHz)
158.6700	12.5	Digital Data	7K60F1D	7.5682	9.5138

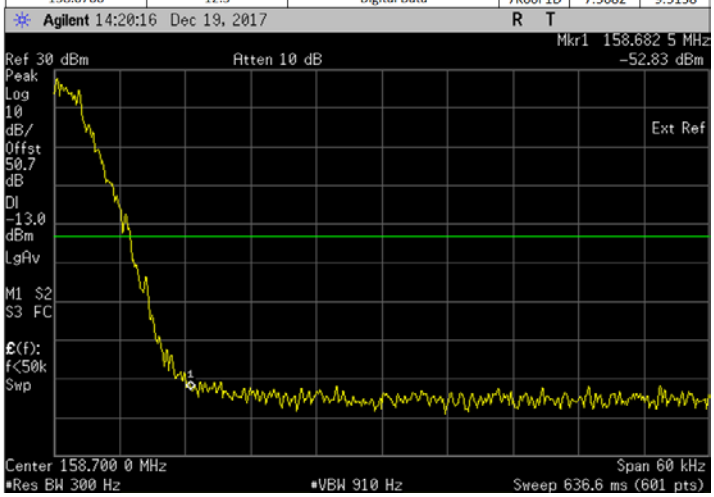

6.7.5. Test Limit

The power of any emission outside of the authorized operating frequency ranges must be attenuated below the transmitting power (P) by a factor of at least 43 + 10 log(P) dB.

6.8. Transient Frequency Behavior

6.8.1. Test Setup

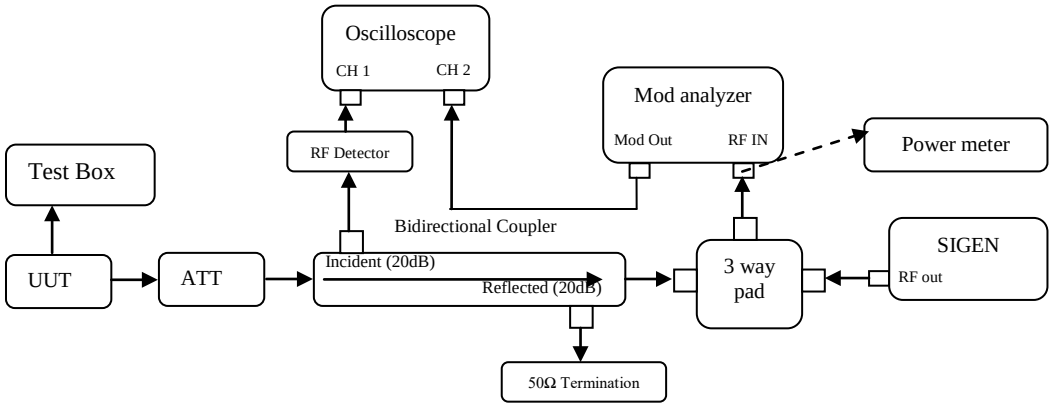

1) Connect the setup as figure above.
2) Path loss for the measurement included.
3) Set on Sigen with the assigned center frequency, internal 1 kHz FM tone.
   FM Deviation: Analog 25kHz Channel Spacing = 25 kHz
   Analog 12.5 kHz Channel Spacing = 12.5 kHz
   C4FM = 12.5 kHz
4) Turn on 50 kHz high pass filter and 15 kHz low pass filter on modulation analyzer.
5) Supply sufficient attenuation ATT to provide the output power of ≤ -11dBm into power meter when UUT is keying up.
6) Note the power level on power meter and dekey the UUT.
7) Adjust the amplitude of the signal generator to the level power meter, maintained the amplitude throughout the rest of the measurement.
8) Connect the output to modulation analyzer.
9) Set the horizontal sweep rate on the storage oscilloscope to 10 milliseconds per division and adjust the display to continuously view the 1000 Hz. Adjust the vertical amplitude control of the oscilloscope to display the 1000 Hz at □4 divisions vertically centered on the display.
10) Reduce 30dB attenuation and transmit the radio to get the trigger line.
11) Capture the screen shot for key-up (rising edge) and de-key (falling edge) mode.

6.8.2. Test Result

Not Applicable

Key-up (Rising Edge)

Not Applicable

De-key (Falling Edge)

Not Applicable

6.8.3. Test Limit

Transmitters designed to operate in the 150-174 MHz and 421-512 MHz frequency bands must maintain transient frequencies within the maximum frequency difference limits during the time intervals indicated:

Time intervals[1 2]	**Maximum frequency difference**[3]	**All equipment**	
		150 to 174 MHz	**421 to 512 MHz**
Transient Frequency Behavior for Equipment Designed to Operate on 25 kHz Channels			
t_1[4]	±25.0 kHz	5.0 ms	10.0 ms
t_2	±12.5 kHz	20.0 ms	25.0 ms
t_3[4]	±25.0 kHz	5.0 ms	10.0 ms
Transient Frequency Behavior for Equipment Designed to Operate on 12.5 kHz Channels			
t_1[4]	±12.5 kHz	5.0 ms	10.0 ms
t_2	±6.25 kHz	20.0 ms	25.0 ms
t_3[4]	±12.5 kHz	5.0 ms	10.0 ms
Transient Frequency Behavior for Equipment Designed to Operate on 6.25 kHz Channels			
t_1[4]	±6.25 kHz	5.0 ms	10.0 ms
t_2	±3.125 kHz	20.0 ms	25.0 ms
t_3[4]	±6.25 kHz	5.0 ms	10.0 ms

[1] t_{on} is the instant when a 1 kHz test signal is completely suppressed, including any capture time due to phasing.
t_1 is the time period immediately following t_{on}.
t_2 is the time period immediately following t_1.
t_3 is the time period from the instant when the transmitter is turned off until t_{off}.
t_{off} is the instant when the 1 kHz test signal starts to rise.

[2] During the time from the end of t_2 to the beginning of t_3, the frequency difference must not exceed the limits specified in §90.213.

[3] Difference between the actual transmitter frequency and the assigned transmitter frequency.

[4] If the transmitter carrier output power rating is 6 watts or less, the frequency difference during this time period may exceed the maximum frequency difference for this time period.

6.9. Adjacent Channel Power

6.9.1. Test Setup (Analog)

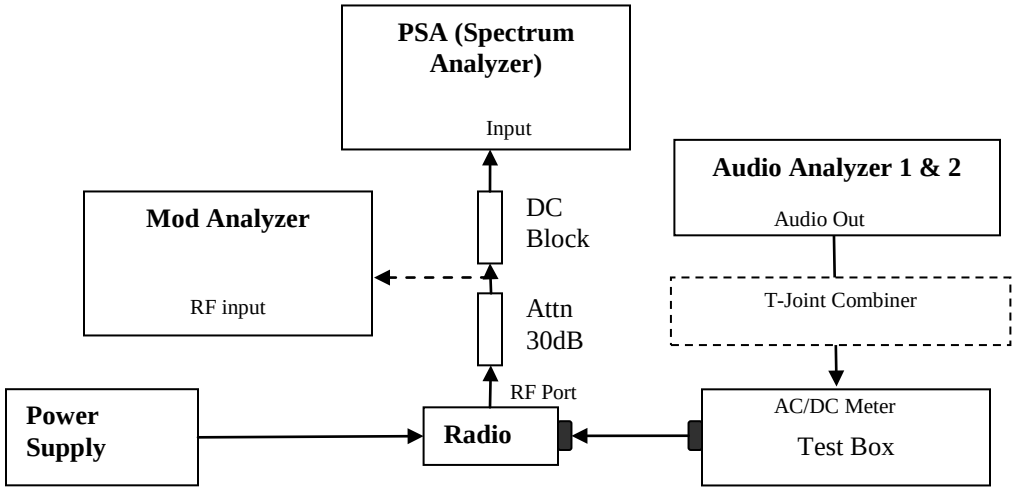

1) The DUT transmitter output port was connected to modulation analyzer.
2) Path loss for the measurement included.
3) Transmit the radio and turn on 1st audio analyzer with audio frequency 650Hz, 50% rated deviation, and record the amplitude value as AmpT1.
4) Turn off Audio analyzer 1 and turn on audio analyzer 2, set the audio frequency to 2.2 kHz and 50% deviation. Record the amplitude as AmpT2.
5) Turn both audio analyzers ON and up 10dB amplitude level.
6) Connect the output to PSA and set to assigned center frequency.
7) Set Span, RBW and VBW as shown in FCC rules part 90.543.
8) Transmit the radio and record the ACP value in dBc.

6.9.2. Test Result

Not Applicable

6.9.3. Test Setup (Digital)

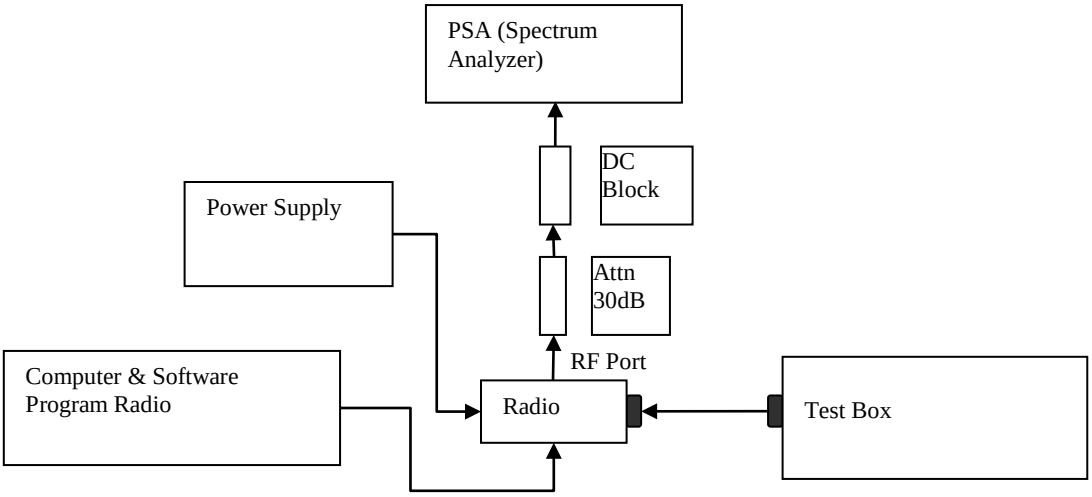

1) Program and set radio to operate in desire test frequency and digital mode with modulation. (4FSK, C4FM, CQPSK or other digital modulation form).
2) Path loss for the measurement included.
3) Prepare setup as per picture.
4) Turn on the ACP Measurement – Press Measure, ACP.
5) Set Span, RBW and VBW as shown in FCC rules part 90.543.
6) Transmit the radio and record the ACP value in dBc.

6.9.4. Test Result

Not Applicable

6.9.5. Test Limit

12.5 kHz Mobile Transmitter ACP Requirements

Offset from center frequency (kHz)	Measurement bandwidth (kHz)	Maximum ACP relative (dBc)
9.375	6.25	−40
15.625	6.25	−60
21.875	6.25	−60
37.50	25.00	−60
62.50	25.00	−65
87.50	25.00	−65
150.00	100	−65
250.00	100	−65
350.00	100	−65
>400 to 12 MHz	30 (s)	−75
12 MHz to paired receive band	30 (s)	−75
In the paired receive band	30 (s)	−100

25 kHz Mobile Transmitter ACP Requirements

Offset from center frequency (kHz)	Measurement bandwidth (kHz)	Maximum ACP relative (dBc)
15.625	6.25	−40
21.875	6.25	−60
37.50	25	−60
62.50	25	−65
87.50	25	−65
150.00	100	−65
250.00	100	−65
350.00	100	−65
>400 kHz to 12 MHz	30 (s)	−75
12 MHz to paired receive band	30 (s)	−75
In the paired receive band	30 (s)	−100

12.5 kHz Base Transmitter ACP Requirements

Offset from center frequency (kHz)	Measurement bandwidth (kHz)	Maximum ACP (dBc)
9.375	6.25	−40
15.625	6.25	−60
21.875	6.25	−60
37.5	25	−60
62.5	25	−65
87.5	25	−65
150	100	−65
250	100	−65
350.00	100	−65
>400 kHz to 12 MHz	30 (s)	−80
12 MHz to paired receive band	30 (s)	−80
In the paired receive band	30 (s)	[1]-85

25 kHz Base Transmitter ACP Requirements

Offset from center frequency (kHz)	Measurement bandwidth (kHz)	Maximum ACP (dBc)
15.625	6.25	−40
21.875	6.25	−60
37.5	25	−60
62.5	25	−65
87.5	25	−65
150	100	−65
250	100	−65
350	100.00	−65
>400 kHz to 12 MHz	30 (s)	−80
12 MHz to paired receive band	30 (s)	−80
In the paired receive band	30 (s)	[1]-85

6.10. Conducted Spurious Emission

6.10.1. Test Setup

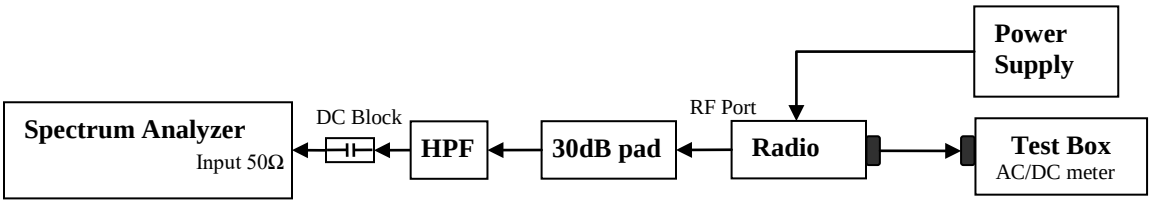

1) The DUT transmitter output port was connected to Spectrum Analyzer with above setup.
2) Program and set radio to operate in desire test frequency and mode. (Analog / digital modulation form).
3) Adjust the PSA RBW = 100kHz for spur emission below 1GHz, and 1MHz for spur emission above 1GHz.
4) Set the Ref offset from the pathloss offset calibration file.
5) Adjust the center frequency of the spectrum analyzer for incremental coverage of the range from:
   (a) The lowest radio frequency to Fc – Test BW
   (b) Fc + Test BW to Freq < 2Fc.
6) Record the levels of spurious emissions and dekey the UUT.
7) Turn On HPF path and Key up the UUT.
8) Adjust the PSA Freq for incremental coverage of range from 2Fc to 10Fc.
9) The levels recorded are the absolute levels of conducted spurious emissions in dBm.

6.10.2. Test Result (Analog)

<u>Analog:</u> 161.7 MHz, 20.0 kHz Channel Spacing, Max Power

Frequency Range: 9kHz ~ 1GHz

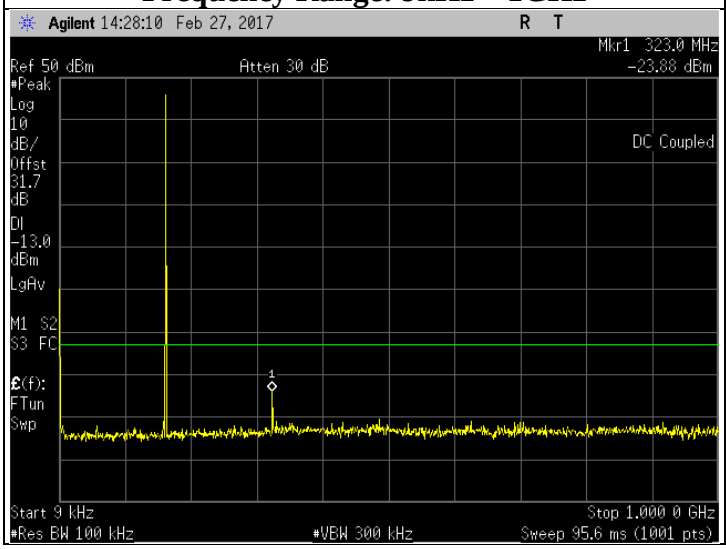

Frequency Range: 1GHz ~ 1.5GHz

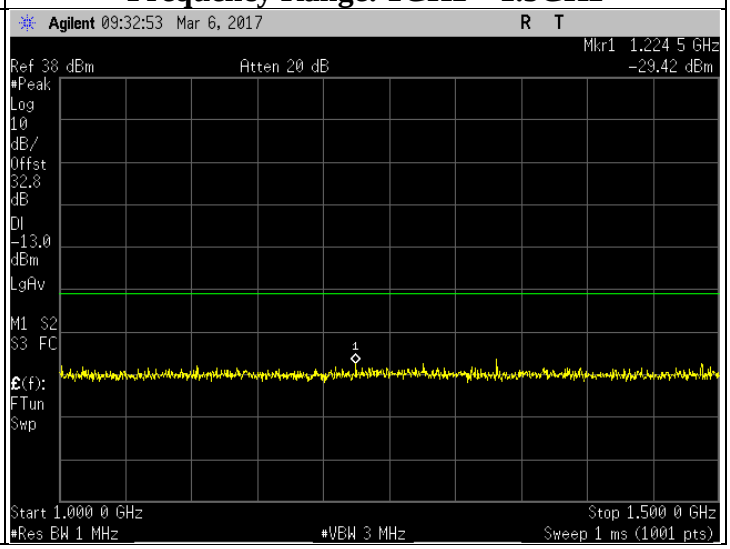

Frequency Range: 1.5GHz ~ 10GHz

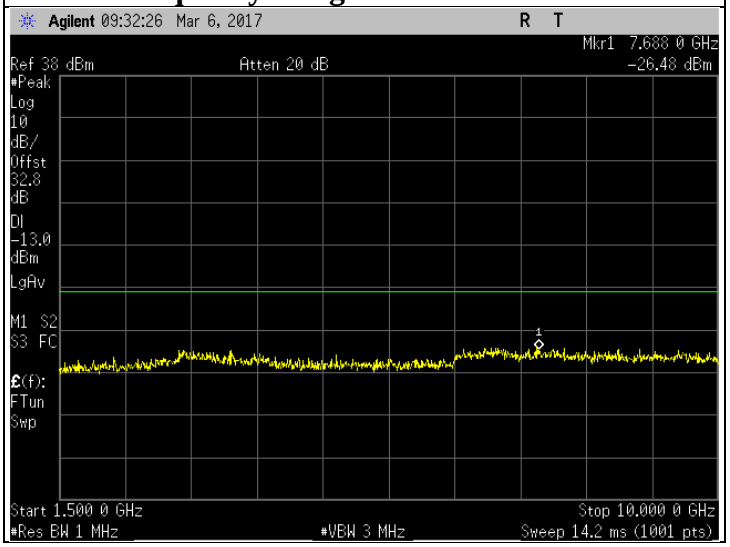

Frequency Range	Highest Spur Freq (MHz)	Spurious Level (dBm)	Failing Limit (dBm)	Remark
9kHz ~ 1GHz	323	-23.88	-13	Pass
1GHz ~ 1.5GHz	1224.5	-29.42	-13	Pass
1.5GHz ~ 10GHz	7688	-26.48	-13	Pass

<u>Analog:</u> 161.7 MHz, 20.0 kHz Channel Spacing, Low Power

Frequency Range: 9kHz ~ 1GHz

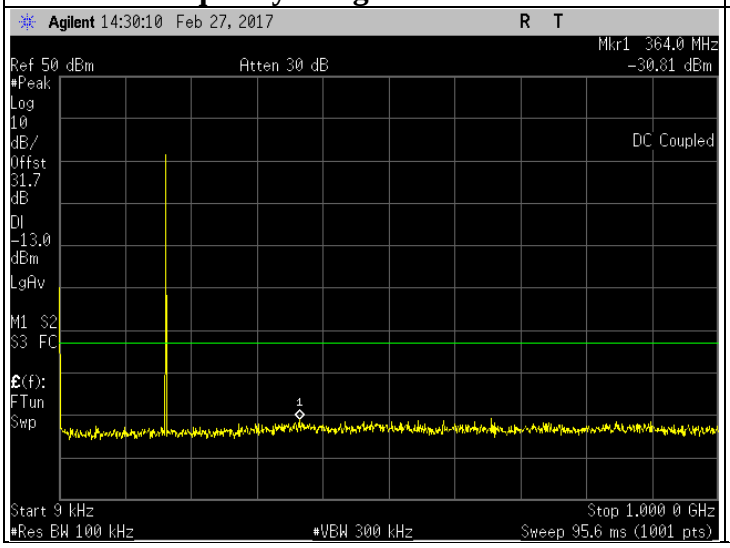

Frequency Range: 1GHz ~ 1.5GHz

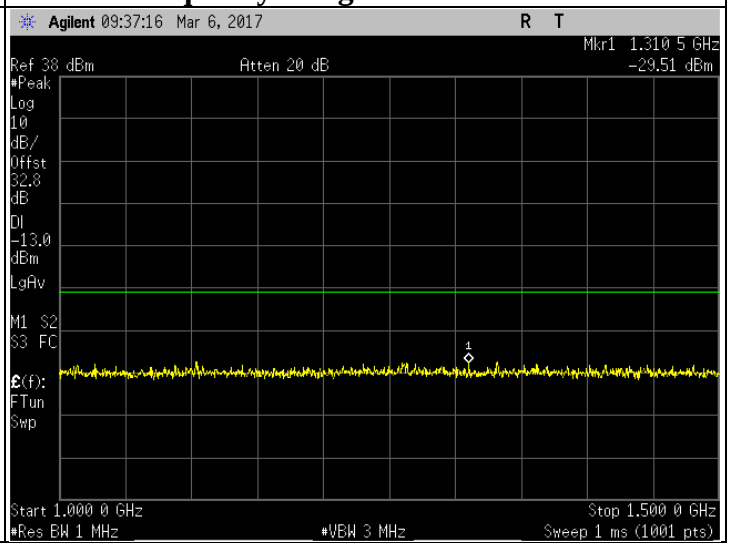

Frequency Range: 1.5GHz ~ 10GHz

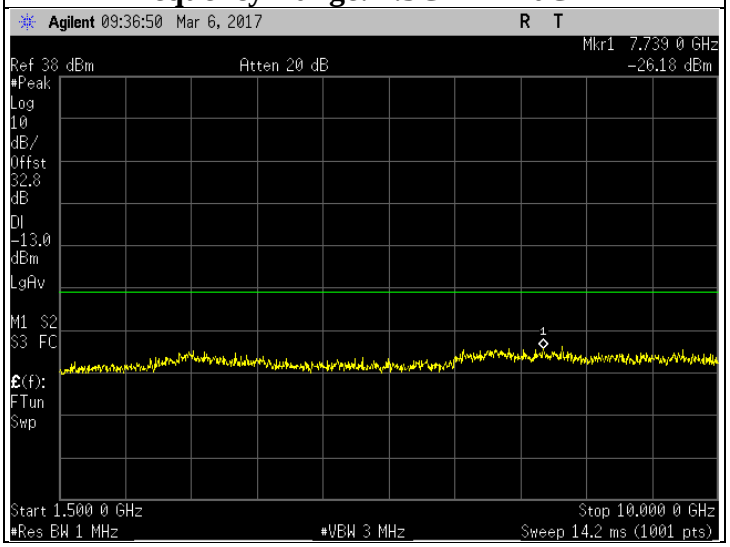

Frequency Range	Highest Spur Freq (MHz)	Spurious Level (dBm)	Failing Limit (dBm)	Remark
9kHz ~ 1GHz	364	-30.81	-13	Pass
1GHz ~ 1.5GHz	1310.5	-29.51	-13	Pass
1.5GHz ~ 10GHz	7739	-26.18	-13	Pass

Analog: 138.0125 MHz, 25 kHz Channel Spacing, Low Power

Frequency Range: 9kHz ~ 1GHz

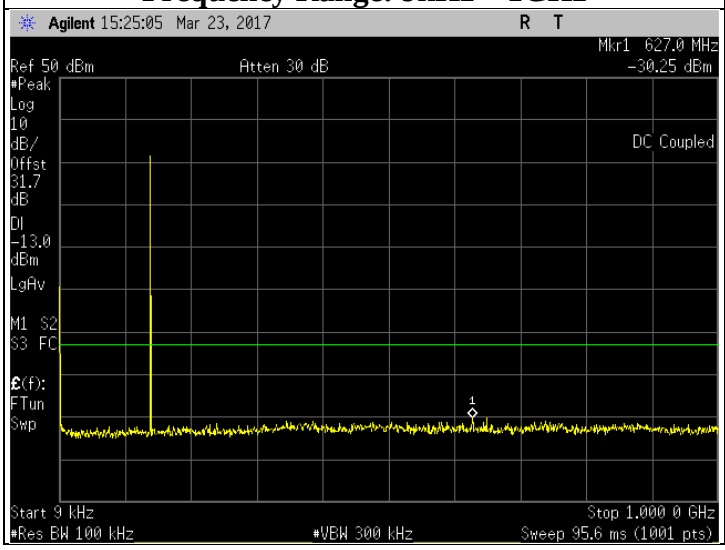

Frequency Range: 1GHz ~ 1.5GHz

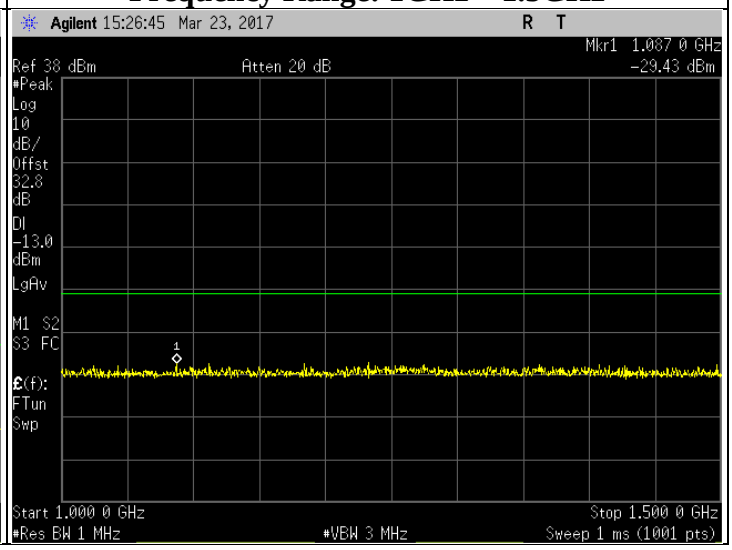

Frequency Range: 1.5GHz ~ 10GHz

Frequency Range	Highest Spur Freq (MHz)	Spurious Level (dBm)	Failing Limit (dBm)	Remark
9kHz ~ 1GHz	627	-30.52	-13	Pass
1GHz ~ 1.5GHz	1087	-29.43	-13	Pass
1.5GHz ~ 10GHz	7008	-26.35	-13	Pass

<u>Analog:</u> 173.3875 MHz, 25 kHz Channel Spacing, Low Power

Frequency Range: 9kHz ~ 1GHz

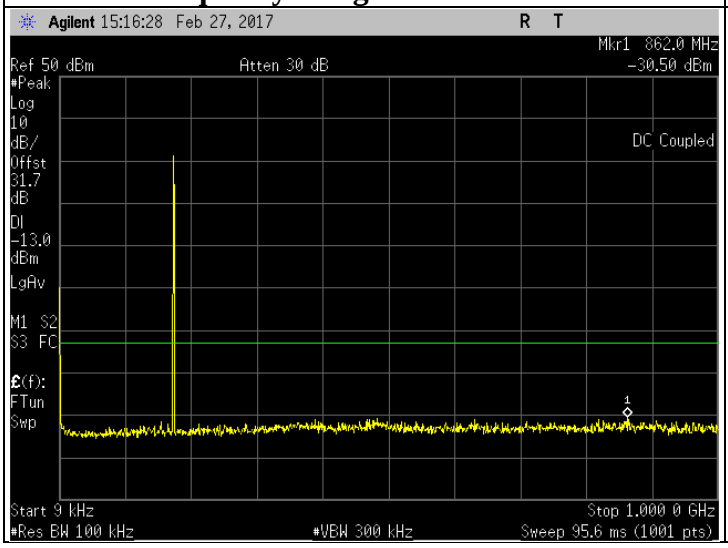

Frequency Range: 1GHz ~ 1.5GHz

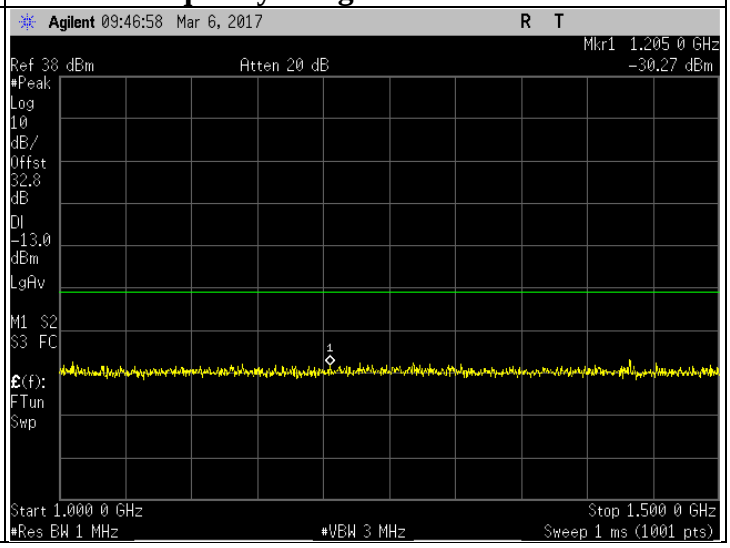

Frequency Range: 1.5GHz ~ 10GHz

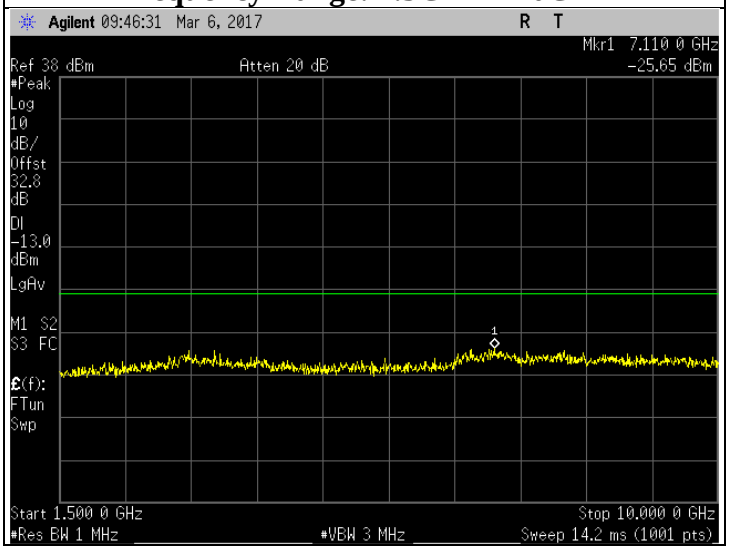

Frequency Range	Highest Spur Freq (MHz)	Spurious Level (dBm)	Failing Limit (dBm)	Remark
9kHz ~ 1GHz	862	-30.50	-13	Pass
1GHz ~ 1.5GHz	1205.0	-30.27	-13	Pass
1.5GHz ~ 10GHz	7110.0	-25.65	-13	Pass

6.10.1. Test Result (Digital)

<u>4FSK:</u> 138.0125 MHz, 12.5 kHz Channel Spacing, Low Power

Frequency Range: 9kHz ~ 1GHz

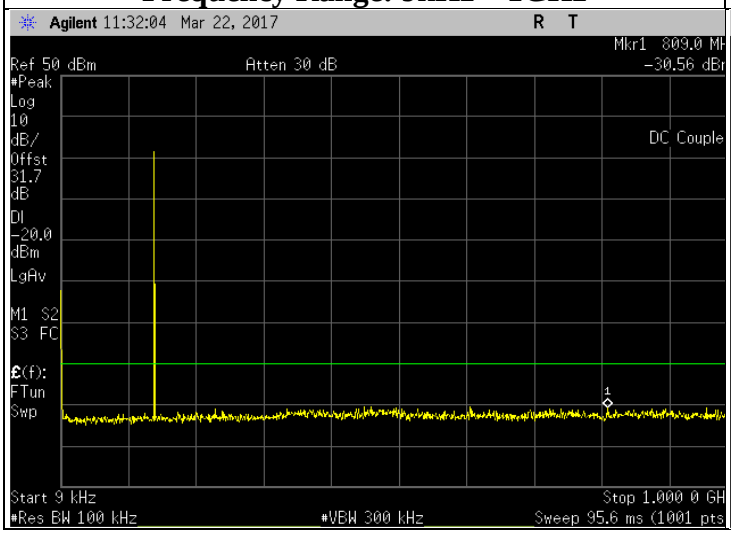

Frequency Range: 1GHz ~ 1.5GHz

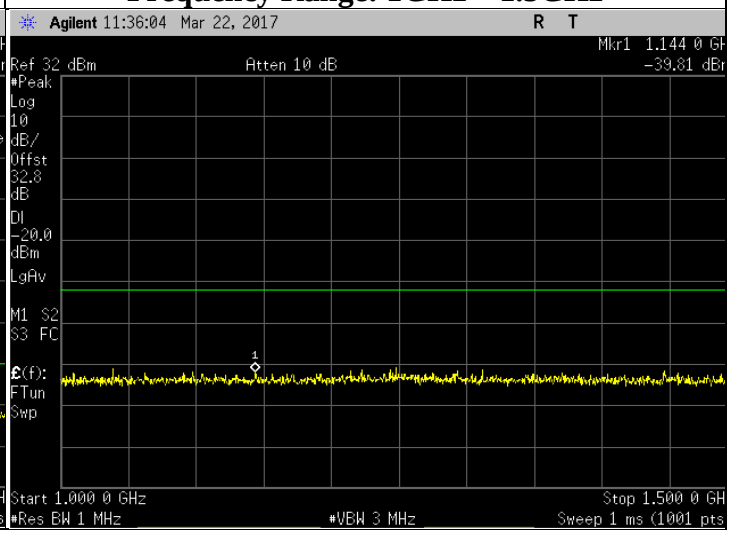

Frequency Range: 1.5GHz ~ 10GHz

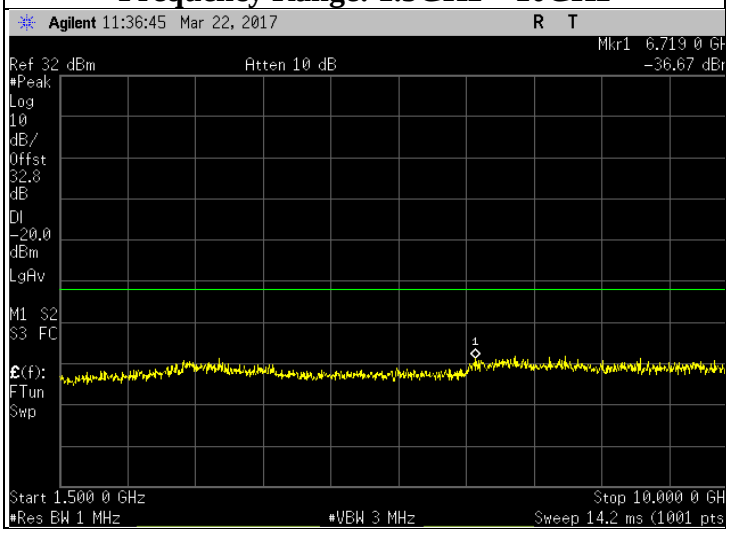

Frequency Range	Highest Spur Freq (MHz)	Spurious Level (dBm)	Failing Limit (dBm)	Remark
9kHz ~ 1GHz	809	-30.56	-20	Pass
1GHz ~ 1.5GHz	1144	-39.81	-20	Pass
1.5GHz ~ 10GHz	6719	-36.67	-20	Pass

4FSK: 173.3875 MHz, 12.5 kHz Channel Spacing, Low Power

Frequency Range: 9kHz ~ 1GHz

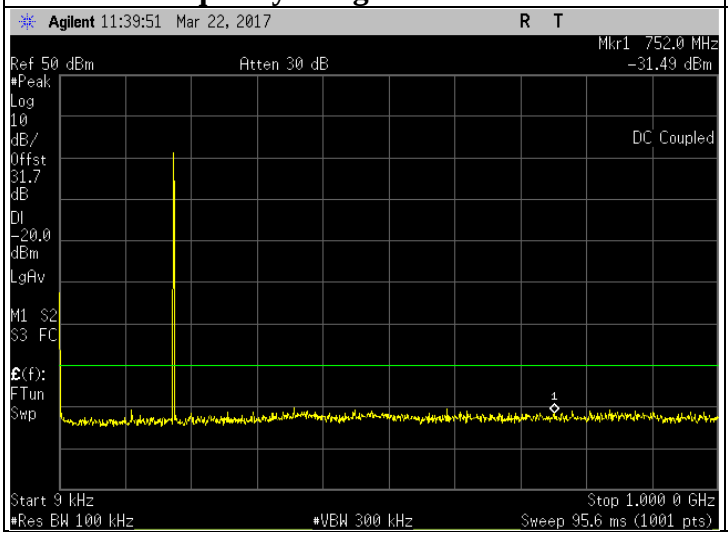

Frequency Range: 1GHz ~ 1.5GHz

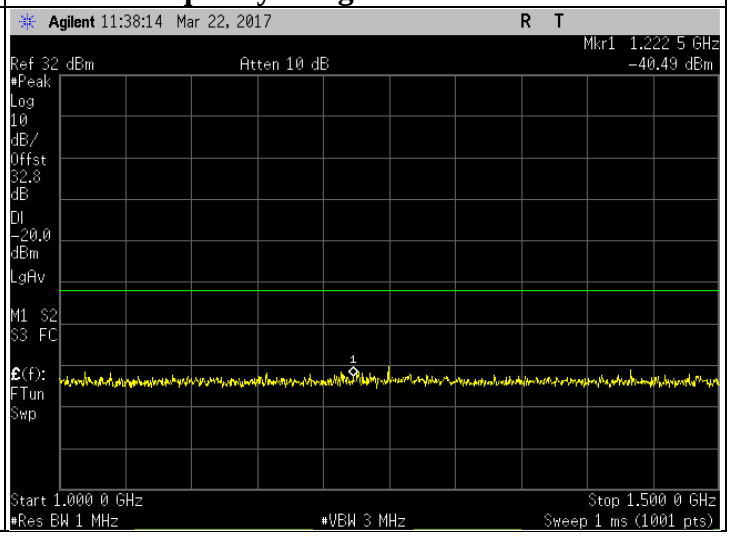

Frequency Range: 1.5GHz ~ 10GHz

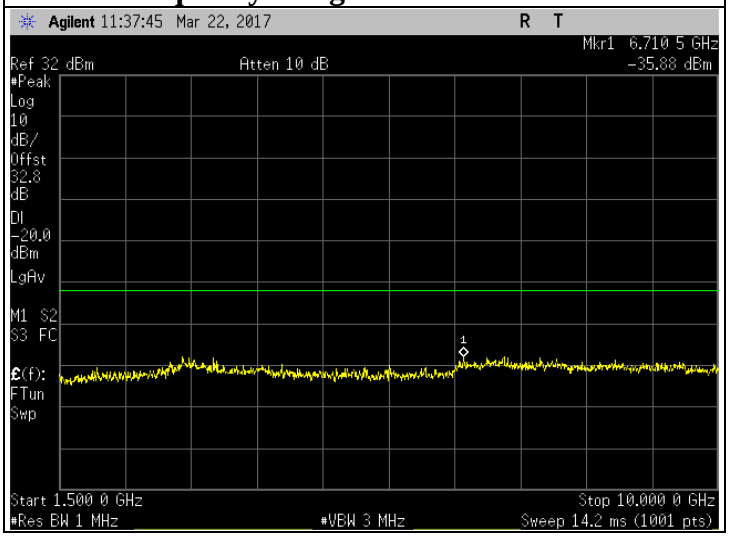

Frequency Range	Highest Spur Freq (MHz)	Spurious Level (dBm)	Failing Limit (dBm)	Remark
9kHz ~ 1GHz	752	-31.49	-20	Pass
1GHz ~ 1.5GHz	1222.5	-40.49	-20	Pass
1.5GHz ~ 10GHz	6710.5	-35.88	-20	Pass

6.10.2. Test Limit

Table below summarized the power of any emission outside a licensee's frequency block shall be attenuated below the transmitter power (P) by at least

Channel Spacing	Part 22	Part 24D	Part 74	Part 80	Part 90
12.5kHz	43 + log10(P) (-13 dBm)	43 + log10(P) (-13 dBm)	43 + log10(P) (-13 dBm)	Not Applicable	50 + log10(P) (-20 dBm)
25kHz		Not Applicable		43 + log10(P) (-13 dBm)	Not Applicable

6.11. Radiated Spurious Emission

6.11.1. Test Setup

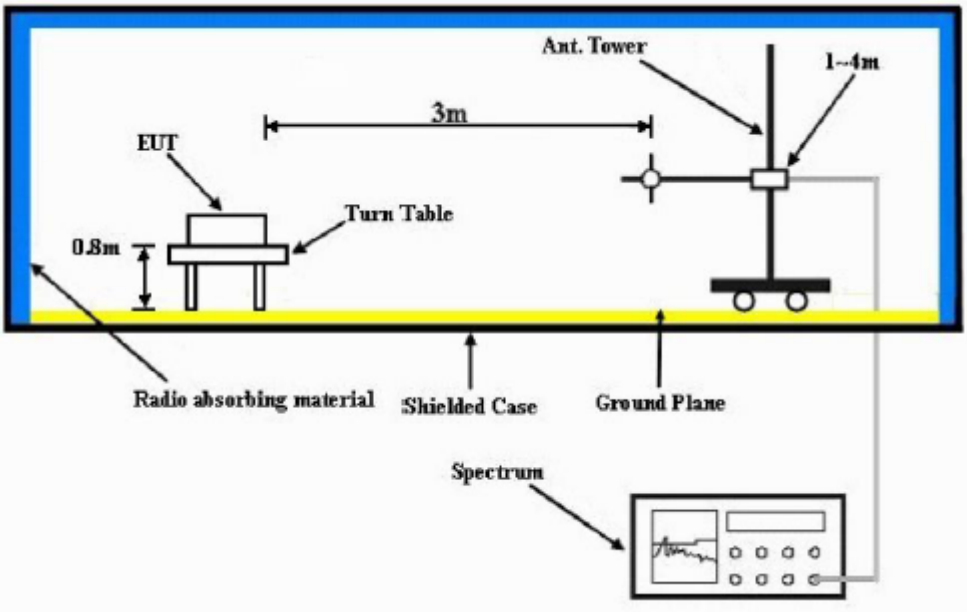

1) The spectrum setting for scanning Radiated Emission below 1 GHz is RBW = 100 kHz, VBW = 300 kHz and above 1 GHz is RBW = 1 MHz, VBW = 3 MHz. Detector mode is positive peak.
2) In the semi-anechoic chamber, setup as illustrated above the EUT placed on the 0.8m height of Turn Table, rotated the table around 360 degrees to search the maximum radiation power and receiver antenna shall be rotated vertical and horizontal polarization and moved height from 1m to 4m to find the maximum polar radiated power. The “Read Value” is the spectrum reading the maximum power value.
3) The substitution antenna is substituted for EUT at the same position and signals generator (S.G) export the CW signal to the substitution antenna via a TX cable. The receiver antenna shall be rotated vertical and horizontal polarization and moved height from 1m to 4m to find the maximum radiation power. Record the power level of maximum radiation power from spectrum. So, the measured substitution value = Ref level of S.G + TX cables loss – Substituted Antenna Gain.
4) Final Radiated Spurious Emission = “Read Value” + Measured substitution value.

6.11.2. Test Result (Analog)

SAC Transmitter Radiated Emission:

Model Number: AAM28JNN9RA1AN **S/N: 511TRP5865** **SR:02808-RF-00030**

Battery Part No: NA **Accy Part No: RMN5127C**

Test Mode: TX Analog

138.012500 MHz **25 kHz** **1.000 Watt(s) /Low Power**

Frequency (MHz)	Limit	Horizontal Measured Emission Equiv Pwr Into Ideal Dipole (dBm)	Vertical Measured Emission Equiv Pwr Into ideal Dipole (dBm)
276.0250	-13.0000	-91.4507 **	-92.1472 **
414.0375	-13.0000	-89.1286 **	-88.8902 **
552.0500	-13.0000	-86.3351 **	-85.3951 **
690.0625	-13.0000	-85.7792 **	-85.9135 **
828.0750	-13.0000	-85.4002 **	-84.3790 **
966.0875	-13.0000	-83.2982 **	-83.6986 **
1104.1000	-13.0000	-64.6515 **	-63.2062 **
1242.1125	-13.0000	-62.6369 **	-62.4839 **
1380.1250	-13.0000	-65.0738 **	-64.5069 **

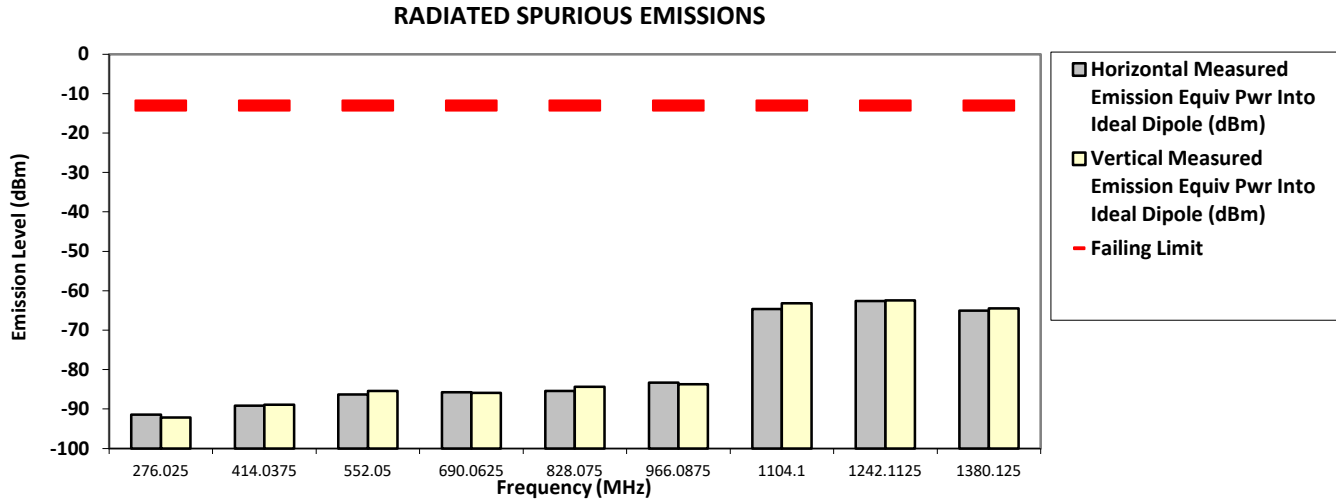

The data presented here was taken using the substitution method as found in the TIA/EIA-603D document.

Motorola Penang EMC Lab - Test Performed by: Nazrin&Qawiman **Thu, Jan 19, 2017**

FCC Registration: 772092 **Industry Canada: 109AK**

Remarks: ** Indicates the spurious emission could not be detected due to noise limitations or ambient.

***Pursuant to CFR 47 Part 2.1057 (c), emissions attenuated more than 20 dB below the permissible limit are not reported**

Temp(Deg): 24.2 Hum(%RH): 71.3

System MU: 5.01 dB

Remarks:

Passed Results	Marginal Results	Failed Results

SAC Transmitter Radiated Emission:

Model Number: AAM28JNN9RA1AN **S/N: 511TRP5865** **SR:02808-RF-00030**

Battery Part No: NA **Accy Part No: RMN5127C**

Test Mode: TX Analog

158.550000 MHz **20 kHz** **1.000 Watt(s) /Low Power**

Frequency (MHz)	Limit	Horizontal Measured Emission Equiv Pwr Into Ideal Dipole (dBm)	Vertical Measured Emission Equiv Pwr Into ideal Dipole (dBm)
317.1000	-13.0000	-91.7438 **	-90.6925 **
475.6500	-13.0000	-87.6941 **	-88.2871 **
634.2000	-13.0000	-85.6519 **	-85.7776 **
792.7500	-13.0000	-84.0199 **	-83.7953 **
951.3000	-13.0000	-82.3273 **	-81.0079 **
1109.8500	-13.0000	-62.9384 **	-62.1476 **
1268.4000	-13.0000	-62.5701 **	-63.3551 **
1426.9500	-13.0000	-62.9298 **	-60.5467 **
1585.5000	-13.0000	-60.9548 **	-61.4821 **

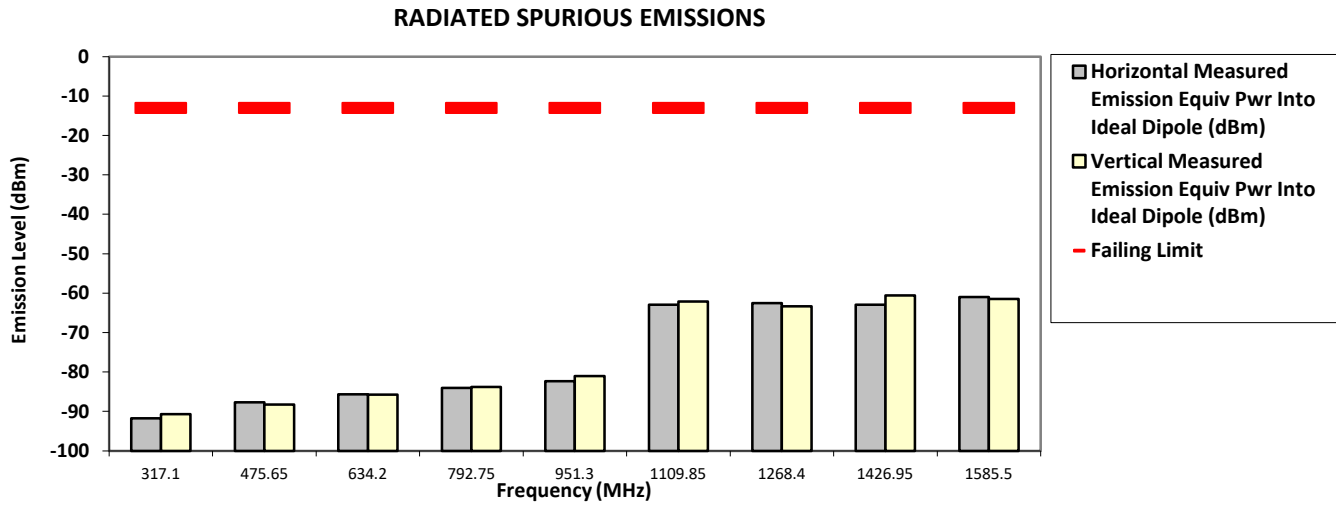

The data presented here was taken using the substitution method as found in the TIA/EIA-603D document.

Motorola Penang EMC Lab - Test Performed by: Nazrin&Qawiman **Thu, Jan 19, 2017**

FCC Registration: 772092 **Industry Canada: 109AK**

Remarks: ** Indicates the spurious emission could not be detected due to noise limitations or ambient.

***Pursuant to CFR 47 Part 2.1057 (c), emissions attenuated more than 20 dB below the permissible limit are not reported**

Temp(Deg): 24.2 Hum(%RH): 71.3

System MU: 5.01 dB

Remarks:

Passed Results	**Marginal Results**	**Failed Results**

SAC Transmitter Radiated Emission:

Model Number: AAM28JNN9RA1AN **S/N: 511TRP5865** **SR:02808-RF-00030**

Battery Part No: NA **Accy Part No: RMN5127C**

Test Mode: TX Analog

158.550000 MHz **20 kHz** **30.000 Watt(s) /Max Power**

Frequency (MHz)	Limit	Horizontal Measured Emission Equiv Pwr Into Ideal Dipole (dBm)	Vertical Measured Emission Equiv Pwr Into ideal Dipole (dBm)
317.1000	-13.0000	-91.7104 **	-91.9601 **
475.6500	-13.0000	-88.1374 **	-86.4416 **
634.2000	-13.0000	-86.5444 **	-84.0017 **
792.7500	-13.0000	-82.4656 **	-83.3506 **
951.3000	-13.0000	-82.6263 **	-80.2361 **
1109.8500	-13.0000	-62.7052 **	-62.6620 **
1268.4000	-13.0000	-61.8645 **	-63.0364 **
1426.9500	-13.0000	-62.7447 **	-62.2164 **
1585.5000	-13.0000	-61.7839 **	-59.9987 **

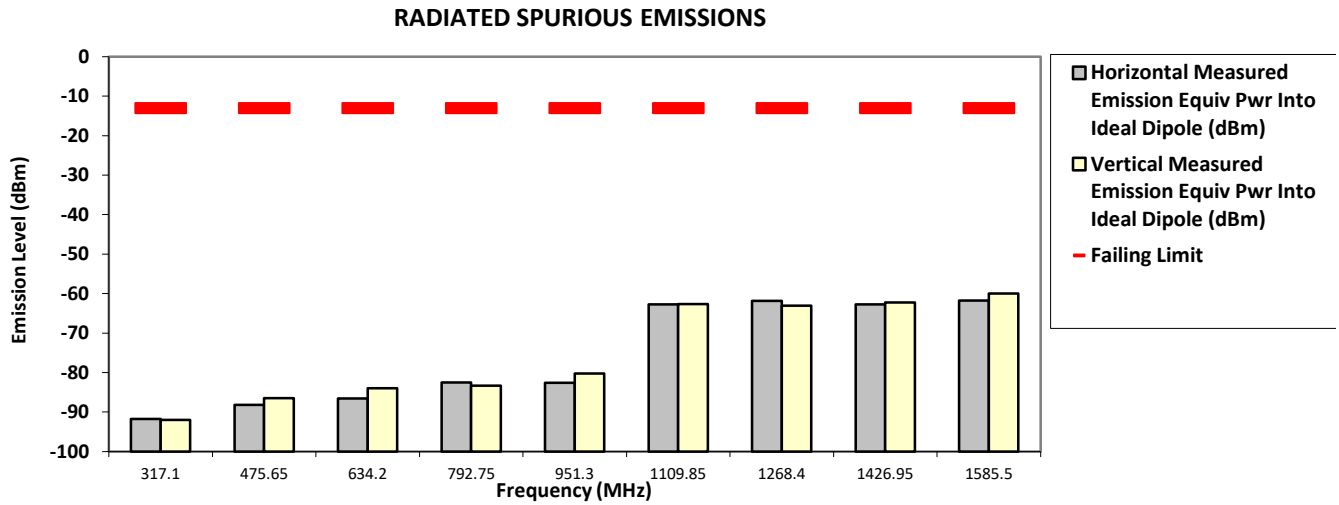

The data presented here was taken using the substitution method as found in the TIA/EIA-603D document.

Motorola Penang EMC Lab - Test Performed by: Nazrin&Qawiman **Thu, Jan 19, 2017**

FCC Registration: 772092 **Industry Canada: 109AK**

Remarks: ** Indicates the spurious emission could not be detected due to noise limitations or ambient.

***Pursuant to CFR 47 Part 2.1057 (c), emissions attenuated more than 20 dB below the permissible limit are not reported**

Temp(Deg): 24.2 Hum(%RH): 71.3

System MU: 5.01 dB

Remarks:

Passed Results	**Marginal Results**	**Failed Results**

SAC Transmitter Radiated Emission:

Model Number: AAM28JNN9RA1AN **S/N: 511TRP5865** **SR:02808-RF-00030**

Battery Part No: NA **Accy Part No: RMN5127C**

Test Mode: TX Analog

161.700000 MHz **20 kHz** **1.000 Watt(s) /Low Power**

Frequency (MHz)	Limit	Horizontal Measured Emission Equiv Pwr Into Ideal Dipole (dBm)	Vertical Measured Emission Equiv Pwr Into ideal Dipole (dBm)
323.4000	-13.0000	-90.1691 **	-92.3188 **
485.1000	-13.0000	-86.3694 **	-86.9392 **
646.8000	-13.0000	-84.8718 **	-86.5371 **
808.5000	-13.0000	-83.8957 **	-85.4192 **
970.2000	-13.0000	-80.2611 **	-83.5620 **
1131.9000	-13.0000	-63.0883 **	-62.6801 **
1293.6000	-13.0000	-61.9540 **	-62.4680 **
1455.3000	-13.0000	-63.4706 **	-62.2151 **
1617.0000	-13.0000	-60.2408 **	-61.0422 **

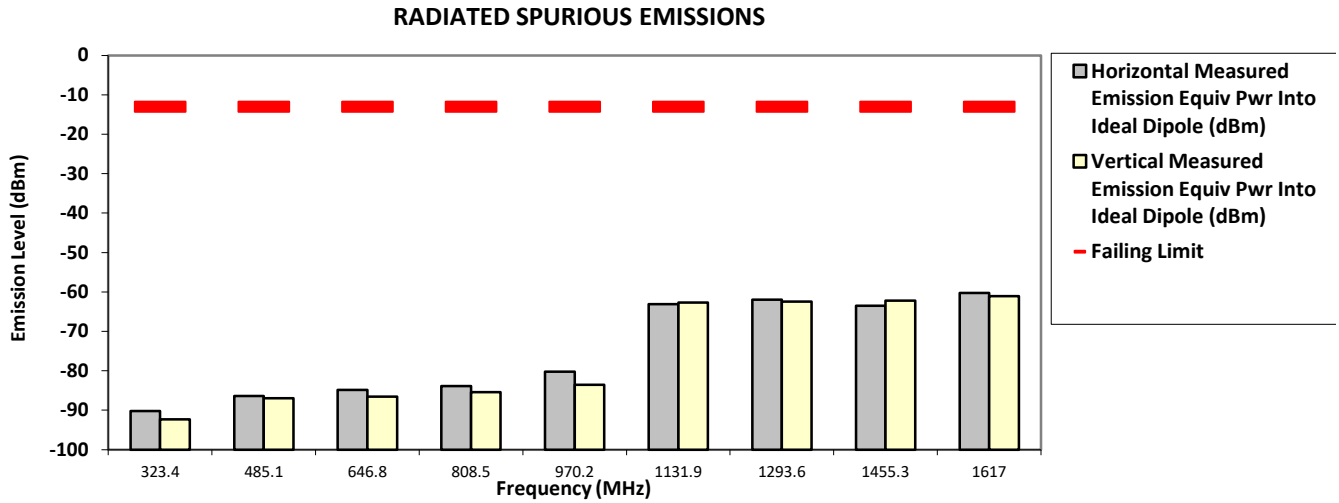

The data presented here was taken using the substitution method as found in the TIA/EIA-603D document.

Motorola Penang EMC Lab - Test Performed by: Nazrin&Qawiman **Thu, Jan 19, 2017**

FCC Registration: 772092 **Industry Canada: 109AK**

Remarks: ** Indicates the spurious emission could not be detected due to noise limitations or ambient.

***Pursuant to CFR 47 Part 2.1057 (c), emissions attenuated more than 20 dB below the permissible limit are not reported**

Temp(Deg): 24.2 Hum(%RH): 71.3

System MU: 5.01 dB

Remarks:

Passed Results	**Marginal Results**	**Failed Results**

SAC Transmitter Radiated Emission:

Model Number: AAM28JNN9RA1AN **S/N: 511TRP5865** **SR:02808-RF-00030**

Battery Part No: NA **Accy Part No: RMN5127C**

Test Mode: TX Analog

161.700000 MHz **20 kHz** **30.000 Watt(s) /Max Power**

Frequency (MHz)	Limit	Horizontal Measured Emission Equiv Pwr Into Ideal Dipole (dBm)	Vertical Measured Emission Equiv Pwr Into ideal Dipole (dBm)
323.4000	-13.0000	-90.3935 **	-89.5123 **
485.1000	-13.0000	-87.7423 **	-87.2883 **
646.8000	-13.0000	-86.7692 **	-85.3397 **
808.5000	-13.0000	-84.4444 **	-84.9281 **
970.2000	-13.0000	-83.6903 **	-82.7077 **
1131.9000	-13.0000	-62.8293 **	-62.5802 **
1293.6000	-13.0000	-63.0675 **	-61.6476 **
1455.3000	-13.0000	-62.5673 **	-63.5523 **
1617.0000	-13.0000	-61.4581 **	-61.2506 **

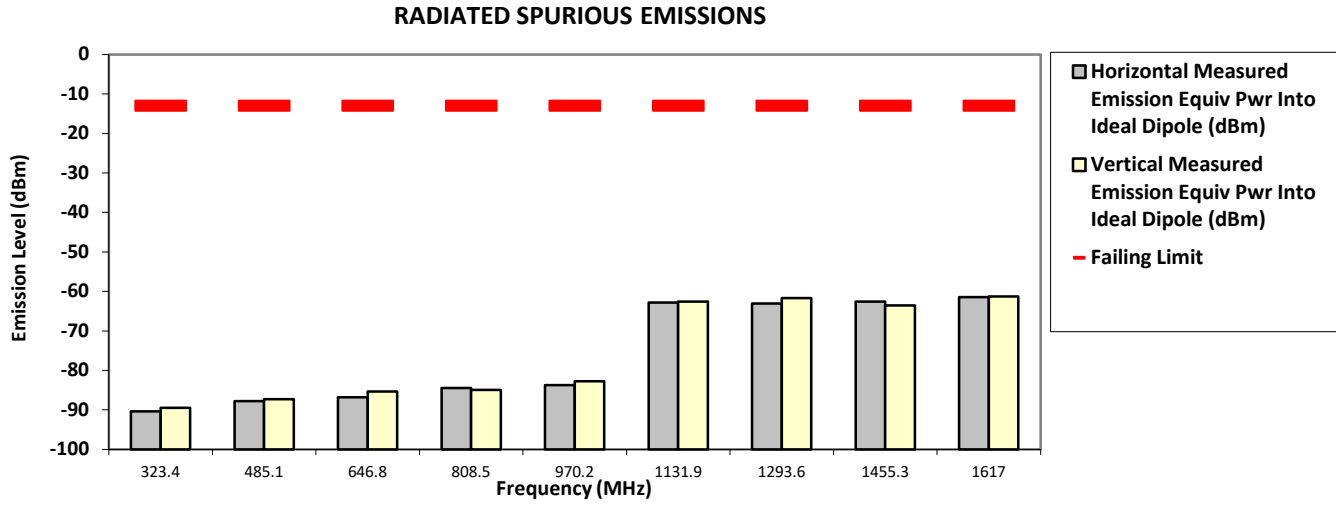

The data presented here was taken using the substitution method as found in the TIA/EIA-603D document.

Motorola Penang EMC Lab - Test Performed by: Nazrin&Qawiman **Thu, Jan 19, 2017**

FCC Registration: 772092 **Industry Canada: 109AK**

Remarks: ** Indicates the spurious emission could not be detected due to noise limitations or ambient.

***Pursuant to CFR 47 Part 2.1057 (c), emissions attenuated more than 20 dB below the permissible limit are not reported**

Temp(Deg): 24.2 Hum(%RH): 71.3

System MU: 5.01 dB

Remarks:

Passed Results	**Marginal Results**	**Failed Results**

SAC Transmitter Radiated Emission:

Model Number: AAM28JNN9RA1AN **S/N: 511TRP5865** **SR:02808-RF-00030**

Battery Part No: NA **Accy Part No: RMN5127C**

Test Mode: TX Analog

173.387500 MHz **25 kHz** **1.000 Watt(s) /Low Power**

Frequency (MHz)	Limit	Horizontal Measured Emission Equiv Pwr Into Ideal Dipole (dBm)	Vertical Measured Emission Equiv Pwr Into ideal Dipole (dBm)
346.7750	-13.0000	-90.6414 **	-90.6452 **
520.1625	-13.0000	-88.8379 **	-86.7745 **
693.5500	-13.0000	-86.3721 **	-86.1278 **
866.9375	-13.0000	-84.0186 **	-83.9972 **
1040.3250	-13.0000	-63.4203 **	-64.7635 **
1213.7125	-13.0000	-62.4560 **	-64.0641 **
1387.1000	-13.0000	-62.0683 **	-61.9637 **
1560.4875	-13.0000	-61.3530 **	-60.3959 **
1733.8750	-13.0000	-61.0423 **	-61.7137 **

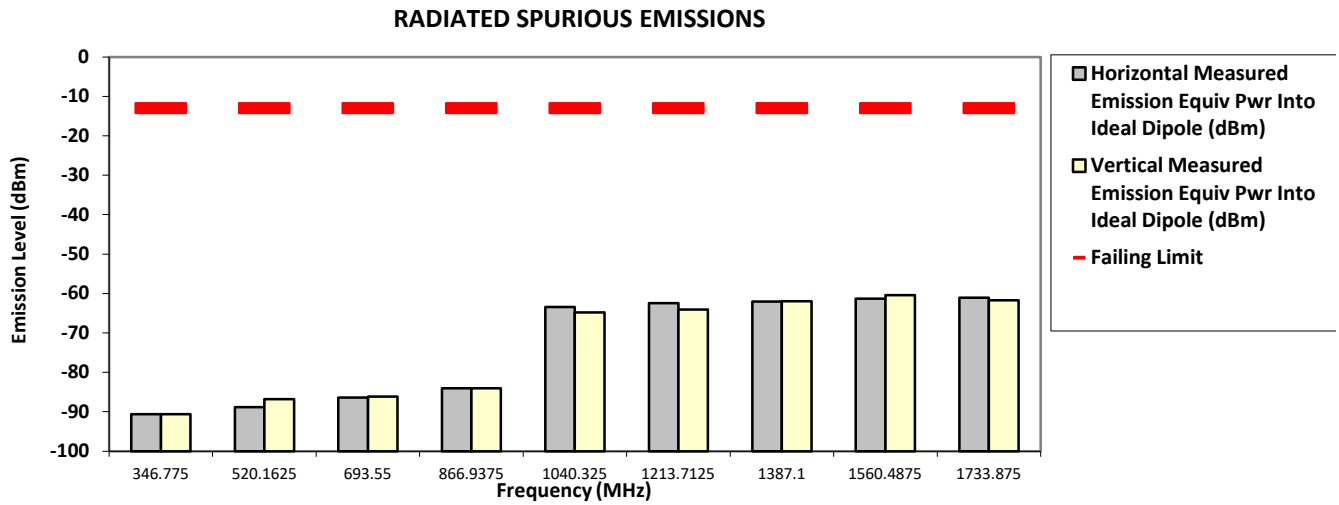

The data presented here was taken using the substitution method as found in the TIA/EIA-603D document.

Motorola Penang EMC Lab - Test Performed by: Nazrin&Qawiman **Thu, Jan 19, 2017**

FCC Registration: 772092 **Industry Canada: 109AK**

Remarks: ** Indicates the spurious emission could not be detected due to noise limitations or ambient.

***Pursuant to CFR 47 Part 2.1057 (c), emissions attenuated more than 20 dB below the permissible limit are not reported**

Temp(Deg): 24.2 Hum(%RH): 71.3

System MU: 5.01 dB

Remarks:

Passed Results	**Marginal Results**	**Failed Results**

6.11.3. Test Result (Digital)

SAC Transmitter Radiated Emission:

Model Number: AAM28JNN9RA1AN **S/N: 511TRP5865** **SR:02808-RF-00030**

Battery Part No: NA **Accy Part No: RMN5127C**

Test Mode: TX Digital

138.012500 MHz **12.5 kHz** **1.000 Watt(s) /Low Power**

Frequency (MHz)	Limit	Horizontal Measured Emission Equiv Pwr Into Ideal Dipole (dBm)	Vertical Measured Emission Equiv Pwr Into ideal Dipole (dBm)
276.0250	-20.0000	-92.2810 **	-91.0602 **
414.0375	-20.0000	-88.1031 **	-89.9043 **
552.0500	-20.0000	-86.5114 **	-86.2881 **
690.0625	-20.0000	-85.3432 **	-85.8116 **
828.0750	-20.0000	-84.3299 **	-84.7171 **
966.0875	-20.0000	-83.8246 **	-82.9006 **
1104.1000	-20.0000	-63.9573 **	-62.1498 **
1242.1125	-20.0000	-62.6763 **	-63.8228 **
1380.1250	-20.0000	-63.9532 **	-64.5978 **

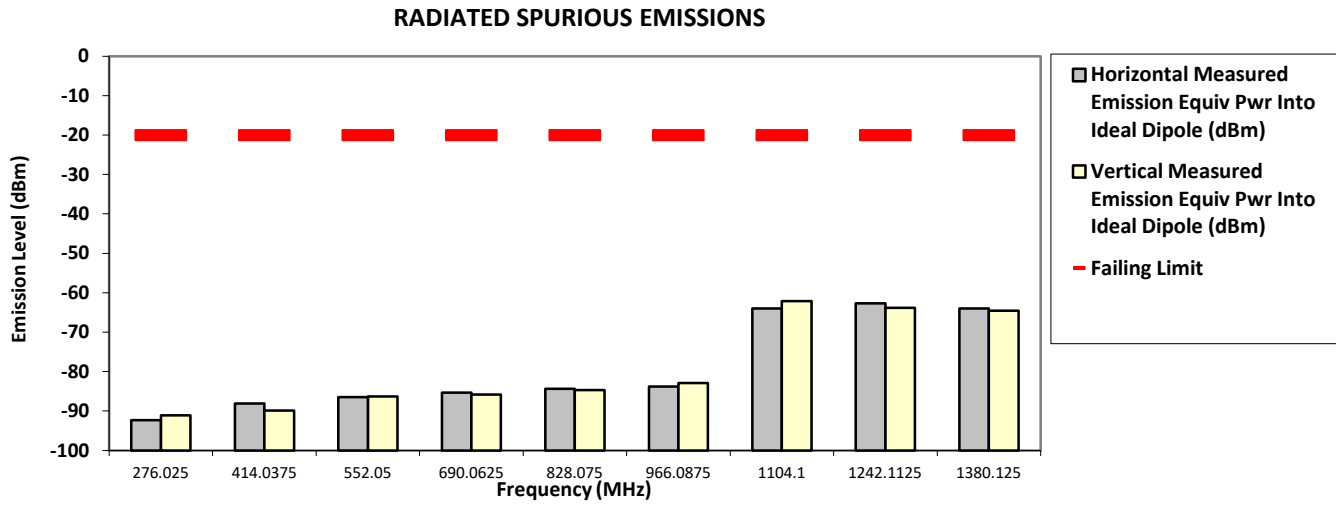

The data presented here was taken using the substitution method as found in the TIA/EIA-603D document.

Motorola Penang EMC Lab - Test Performed by: Nazrin&Qawiman **Thu, Jan 19, 2017**

FCC Registration: 772092 **Industry Canada: 109AK**

Remarks: ** Indicates the spurious emission could not be detected due to noise limitations or ambient.

***Pursuant to CFR 47 Part 2.1057 (c), emissions attenuated more than 20 dB below the permissible limit are not reported**

Temp(Deg): 24.2 Hum(%RH): 71.3

System MU: 5.01 dB

Remarks:

Passed Results	Marginal Results	Failed Results

SAC Transmitter Radiated Emission:

Model Number: AAM28JNN9RA1AN **S/N: 511TRP5865** **SR:02808-RF-00030**

Battery Part No: NA **Accy Part No: RMN5127C**

Test Mode: TX Digital

173.387500 MHz **12.5 kHz** **1.000 Watt(s) /Low Power**

Frequency (MHz)	Limit	Horizontal Measured Emission Equiv Pwr Into Ideal Dipole (dBm)	Vertical Measured Emission Equiv Pwr Into ideal Dipole (dBm)
346.7750	-20.0000	-91.2060 **	-90.2673 **
520.1625	-20.0000	-87.1762 **	-88.2072 **
693.5500	-20.0000	-86.1405 **	-86.8833 **
866.9375	-20.0000	-84.4086 **	-83.8864 **
1040.3250	-20.0000	-64.3449 **	-64.1438 **
1213.7125	-20.0000	-63.9471 **	-63.0565 **
1387.1000	-20.0000	-62.5071 **	-62.7469 **
1560.4875	-20.0000	-61.1036 **	-62.1186 **
1733.8750	-20.0000	-60.6074 **	-58.9604 **

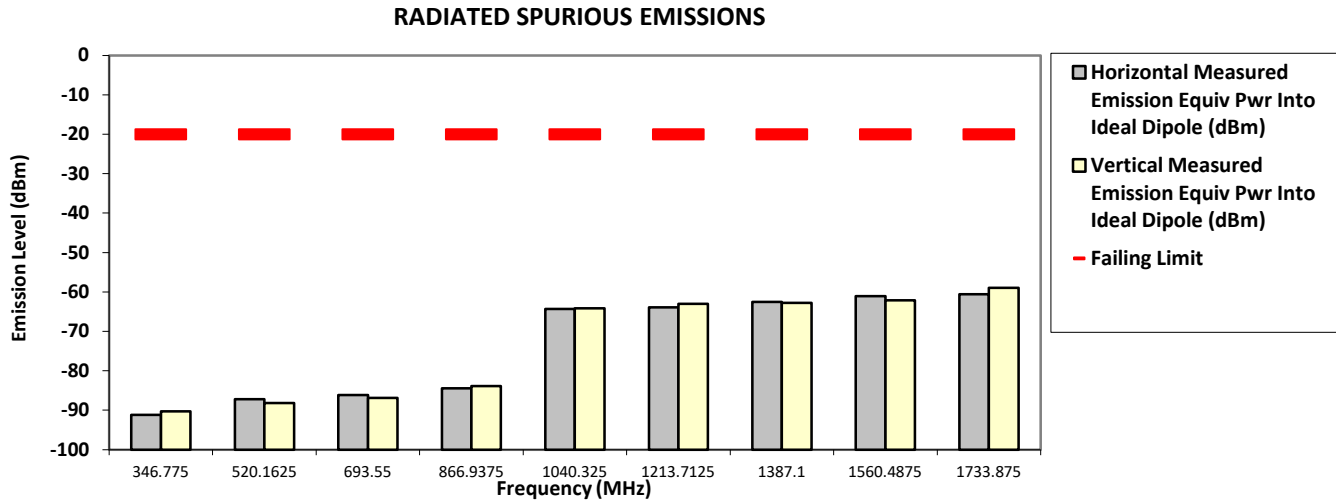

The data presented here was taken using the substitution method as found in the TIA/EIA-603D document.

Motorola Penang EMC Lab - Test Performed by: Nazrin&Qawiman **Thu, Jan 19, 2017**

FCC Registration: 772092 **Industry Canada: 109AK**

Remarks: ** Indicates the spurious emission could not be detected due to noise limitations or ambient.

***Pursuant to CFR 47 Part 2.1057 (c), emissions attenuated more than 20 dB below the permissible limit are not reported**

Temp(Deg): 24.2 Hum(%RH): 71.3

System MU: 5.01 dB

Remarks:

Passed Results	Marginal Results	Failed Results

6.11.4. Test Limit

Table below summarized the power of any emission outside a licensee's frequency block shall be attenuated below the transmitter power (P) by at least

Channel Spacing	Part 22	Part 24D	Part 74	Part 80	Part 90
12.5kHz	43 + log10(P) (-13 dBm)	43 + log10(P) (-13 dBm)	43 + log10(P) (-13 dBm)	Not Applicable	50 + log10(P) (-20 dBm)
25kHz		Not Applicable		43 + log10(P) (-13 dBm)	Not Applicable

6.12. Effective Radiated Power (ERP) / GNSS (EIRP for 1559 - 1610MHz)

6.12.1. Test Setup

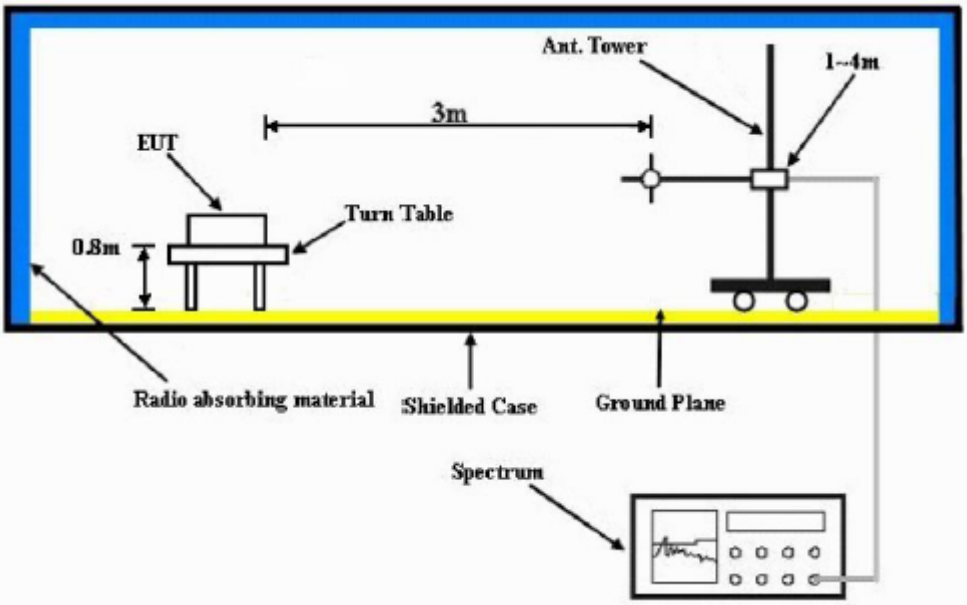

1) The spectrum setting for Equivalent Isotropically Radiated Power (EIRP) is RBW = 100 kHz, VBW = 300 kHz. Detector Mode is RMS.
2) In the semi-anechoic chamber, setup as illustrated above the EUT placed on the 0.8m height of Turn Table, rotated the table 45 degree each interval to search the maximum radiation power and receiver antenna shall be rotated vertical and horizontal polarization and moved height from 1m to 4m to find the maximum polar radiated power for each degree interval. The "Read Value" is the spectrum reading of maximum power value.
3) The substitution antenna is substituted for EUT at the same position and signals generator (S.G) export the CW signal to the substitution antenna via a TX cable. The receiver antenna shall be rotated vertical and horizontal polarization and moved height from 1m to 4m to find the maximum radiation power. Record the power level of maximum radiation power from spectrum. So, the Measured substitution value = Ref level of S.G + TX cables loss – Substituted Antenna Gain.
4) EIRP = "Read Value" + Measured substitution value + 2.15.

6.12.2. Test Result

Not Applicable

6.12.3. Test Limit

The maximum output power of the transmitter for mobile stations is 100 watts (20 dBW). Power is given in terms of effective radiated power (ERP).

For operations in the 758-775 MHz and 788-805 MHz bands, all emissions including harmonics in the band 1559-1610 MHz shall be limited to −70 dBW/MHz equivalent isotropically radiated power (EIRP) for wideband signals, and −80 dBW EIRP for discrete emissions of less than 700 Hz bandwidth.

6.13. AC Power Line Conducted Spur Emissions

6.13.1. Test Setup

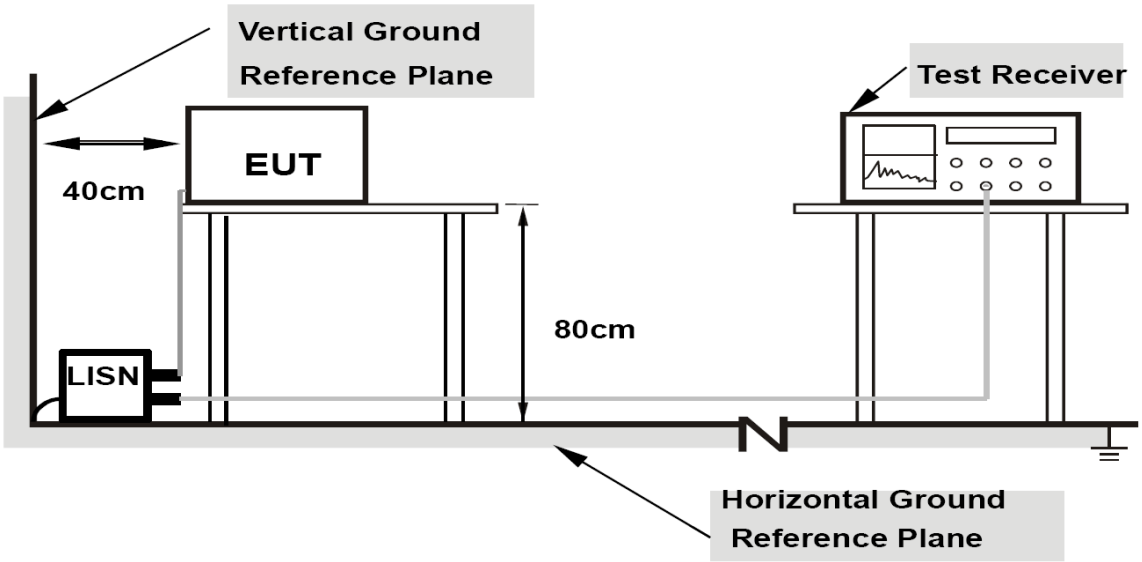

1) Tests were conducted for both Receive and Transmit Mode of the EUT.
2) The EUT was placed 0.4 meters from the conducting wall of the shielded room with EUT being connected to the power mains through a line impedance stabilization network (LISN). Other support units were connected to the power mains through another LISN. The two LISNs provide 50 ohm / 50 µH of coupling impedance for the measuring instrument.
3) Both lines of the power mains connected to the EUT were checked for maximum conducted interference.
4) The frequency range from 150 kHz to 30 MHz was measured.

6.13.2. Test Result

Not Applicable

6.13.3. Test Limit

For AC Power Line Conducted Test Limit can be Class A or B depends on product classification.

Limits for conducted disturbance at the mains ports of class A ITE

Frequency range MHz	Limits dB(µV)	
	Quasi-peak	Average
0,15 to 0,50	79	66
0,50 to 30	73	60
NOTE The lower limit shall apply at the transition frequency.		

Limits for conducted disturbance at the mains ports of class B ITE

Frequency range MHz	Limits dB(µV)	
	Quasi-peak	Average
0,15 to 0,50	66 to 56	56 to 46
0,50 to 5	56	46
5 to 30	60	50
NOTE 1 The lower limit shall apply at the transition frequencies. NOTE 2 The limit decreases linearly with the logarithm of the frequency in the range 0,15 MHz to 0,50 MHz.		