QTY	DIMENSIONS	SYMB.

1. DESCRIPTION AND APPLICATION:
   1.1 LABEL TO BE USED IN COMMUNICATION EQUIPMENT

2. APPLICABLE DOCUMENTS:

12M05022A33	MOTOROLA QUALIFICATION PROCEDURE
12M80967A78	MOTOROLA VENDOR MATERIAL QUALITY CONTROL
12G13933A01	MOTOROLA RECEIVING BAR CODE SPECIFICATION
12S10301A	MOTOROLA ADHESIVE BONDED MATERIAL
12S10334A	MOTOROLA APPEARANCE STANDARD
12S10601A	MOTOROLA PACKAGING RULES FOR VENDORS
12S22968	MOTOROLA MARKING STANDARD
7-04-00-07 MCIL	1st ARTICLE APROVAL PROCEDURE ASTM D-1238.
12M80957B70	MOTOROLA RECYCLE REMARK.
12M02897W18	SCTN, 2 MOTOROLA CONTROLLED AND REPORTABLE MATERIALS DISCLOSURE.
12M09176A72	MOTOROLA DECORATED SURFACE RELIABILITY REQUIREMENT.
ASME Y.14.5 (1994)	MOTOROLA DIMENSIONING AND TOLERANCING
12M05049A01	MOTOROLA REQUIREMENTS FOR PARTS FABRICATED USING DATA BASE

3. REQUIREMENTS:
   3.1. GENERAL:
   - 3.1.1. PARTS SHALL BE CLEAN AND FREE OF ALL FOREIGN MATTER.
   - 3.1.2. PARTS SHALL BE FREE OF FRAYED AND RAGGED EDGES.
   - 3.1.3. SAMPLE PARTS SHALL BE SUBMITTED TO MOTOROLA FOR APPROVAL BEFORE PROCEEDING WITH PRODUCTION RUN.
   - 3.1.4. PURCHASING CYCLE SHALL NOT EXCEED (6) MONTHS SUPPLY TO AVOID ADHESIVE CURE IN STORAGE BEFORE USE.
   - 3.1.5. VENDOR SHALL SUPPLY WRITTEN CERTIFICATION (WITH EACH PACKAGE) OF DATE OF ADHESIVE APPLICATION. CERTIFICATE DATE SHALL BE NO MORE THAN (6) MONTHS PRIOR TO RECEIPT OF PARTS.
   - 3.1.6. ARTWORK TO BE FURNISHED BY MOTOROLA PURCHASING DEPARTMENT
   - 3.1.7. DIMENSIONS MARKED [X] ARE CRITICAL CHARACTERISTICS AND REQUIRE S.P.C. REPORT PER MOTOROLA SPEC. 12M80967A78
   - 3.1.8. PACKAGING FOR SHIPMENT: PER 12S10601A.
     - 3.1.8.1. PARTS SHALL BE ADEQUATELY PACKED TO PREVENT DAMAGE, WITH A DATE CODE, PART NUMBER, AND ISSUE LETTER MARKED ON BACKING PAPER OR PACKAGE.

   3.2. MATERIALS: SEE CROSS SECTION VIEW
   MATERIAL: LABEL UL CODE: SES-500 FOR OUTDOOR APPLICATIONS
   - 3.2.1. PART MUST COMPLY WITH ALL REQUIREMENTS OF 12M07897W18
     - 3.2.1.1. SURFACE TEXTURE SHALL BE A CLEAR FINISH.
   - 3.2.2. MINIMUM SHELF-LIFE BEFORE CURING OCCURS: (1) YEAR FROM DATE OF CERTIFICATION.
     - 3.2.2.1. MINIMUM PEEL STRENGTH: 2 POUNDS/INCH.
       - 3.2.2.1.1. SHALL MEET REQUIREMENTS OF 12S10301A.
       - 3.2.2.1.2. RATE OF FORCE APPLICATION: 1 LB/SEC MAXIMIM.
   - 3.2.3. BACKING MATERIAL: PAPER, TREATED FOR EASY PEEL-OFF FROM ADHESIVE.
   - 3.2.2.GRAPHICS:
     - 3.2.2.1. COLORS: GRAPHICS COLOR - BLACK
       BACKGROUND: WHITE
     - 3.2.2.2. THE LABEL IS TO BE TOTALY OPAQUE (NON TRANSPARANT).
     - 3.2.2.3. GRAPHICS: ACCORDING DRAWING AND ARTWORK.
     - 3.2.2.4. UL LOGO: PER UNDERWRITERS LABORATORIES INC. SPEC
     - 3.2.2.5. GRAPHICS TO BE PRINTED INTERNAL, BETWEEN THE LABEL AND ADHESIVE MATERIAL - SEE DETAIL B.
   - 3.2.4 STORAGE TEMPRATURE RANGE:-40 - 85C.
     - 3.2.4.1. SHALL BE PRESSURE-SENSITVE AND APPLIED TO ONE SIDE ONLY, AS SHOWN.
     - 3.2.4.2. SHALL NOT ATTACK POLYCARBONATE.
     - 3.2.4.3. COMMON CLEANING SOLUTIONS OR WATER SHALL NOT AFFECT PART.
     - 3.2.4.4. MINIMUM SHELF-LIFE BEFORE CURING OCCURS: (1) YEAR FROM DATE OF CERTIFICATION.
     - 3.2.4.5. MINIMUM PEEL STRENGTH: 40 OUNCE/INCH (.45N/MM)
       - 3.2.4.5.1. SHALL MEET REQUIREMENTS OF 12S10301A.
       - 3.2.4.5.2. RATE OF FORCE APPLICATION: 1 LB/SEC MAXIMIM.
   - 3.2.5. BACKING MATERIAL: PAPER, TREATED FOR EASY PEEL-OFF FROM ADHESIVE.
   - 3.2.6. APPEARANCE: PER 12S10334A, SURFACE CLASS A, TABLE 1.
   - 3.2.7. MARKING: PER 12S22968.
   - 3.2.7 VENDOR WILL PROVIDE FOR 1st ARTICLE INSPECTION:
     - 3.2.8.1 5 IDENTIFIED ITEMS.
     - 3.2.8.2 MATERIALS COC.
     - 3.2.8.3 FULL DIMENSION INSPECTION REPORT INCLUDING Cp AND Cpk CALCULATION FOR [X] DIMENSIONS.

4. VENDOR QUALITY ASSURANCE PROVISIONS: PER 12M80967A78 AND 12M05022A33.
5. EXCEPTIONS: NO CHANGE SHALL BE ALLOWED ON PRODUCTION MATERIAL, REGARDLESS OF WHETHER SUCH CHANGE AFFECTS REQUIREMENTS SPECIFIED, WITHOUT PRIOR EXPLICIT WRITTEN APPROVAL BY MOTOROLA PORTABLE PRODUCTS ENGINEERING AND PURCHASING DEPARTMENTS.

6. GENERAL NOTE:
   THE PART DEPICTED ON THIS DRAWING IS REPRESENTED IN GRAPHIC DETAIL TO SHOW ALL OF ITS FEATURES FOR THE PURPOSE OF ENGINEERING DOCUMENTATION. ONLY THOSE DIMENSIONS WHICH AFFECT THE FIT AND FUNCTION OF THE OVERALL PRODUCT ASSEMBLY HAVE BEEN INCLUDED FOR THE PURPOSE OF INSPECTION. ALL REMAINING FEATURES NOT SPECIFICALLY DIMENSIONED MUST STILL BE APPROVED BY MOTOROLA MECHANICAL ENGINEERING PRIOR TO QUALIFICATION OF THE TOOL. MOTOROLA RESERVES THE RIGHT TO REJECT QUALIFICATION FOR PARTS WITH MISSING OR INCOMPLETE FEATURES AND/OR UNDIMENSIONED FEATURES THAT FALL OUTSIDE INDUSTRY STANDARD TOLERANCE

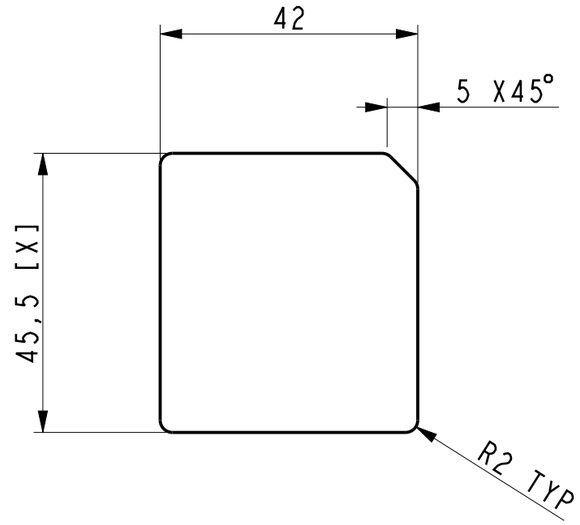

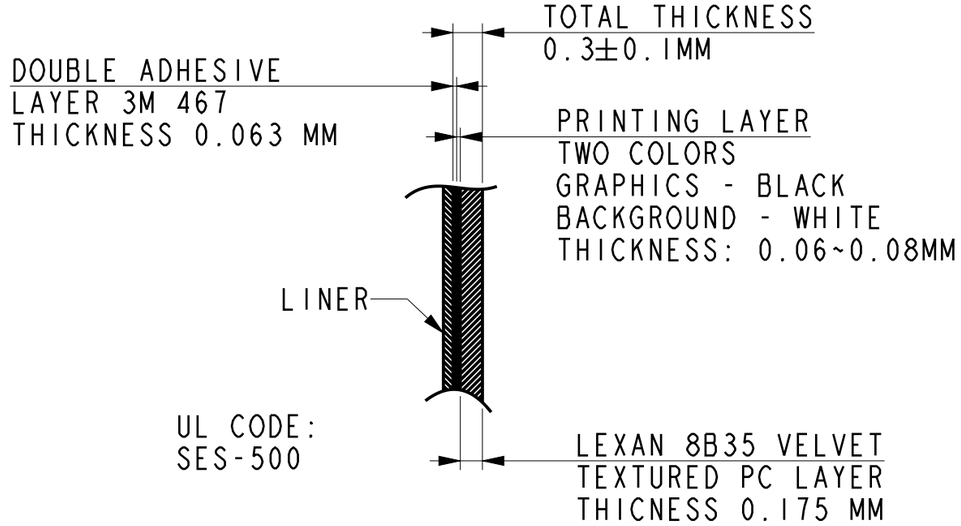

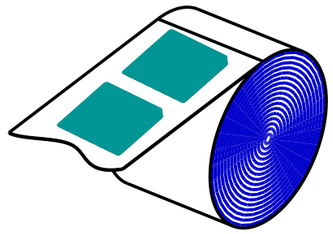

REV	DESCRIPTION	MEMO
1	RELEASE FOR QUOTATION	22 JUN 2017
2	ADD NOTES IGAL T.	28 JUN 2017
3	REMOVE PN LB001003A02 LB001003A01: ADD CE NUMBER UPDATE TRASH BIN MARK LB001003A03: REMOVE 3 ROWS IGAL T.	1 AUG 2017
4	ADD MATERIAL DEFINITIONS UPDATE NOTES IGAL T.	15 AUG 2017
A	RELEASE FOR PRODUCTION IGAL T.	16 AUG 2017
B	CHANGE ARTWORK UPDATE VOLTAGE RANGE TO 13.8-27.6V UPDATE FCC NUMBER TO AZ492FT7102 RELEASE REV B IGAL T.	17 OCT 2017

DATA BASE:			DESCRIPTION	CAT. NO.
COMPUTER GENERATED DRAWING DO NOT REVISE MANUALLY. DO NOT SCALE	TOLERANCES: GENERAL: ±0.3 HOLES: ANGLES: THREADS:	PLATING:	MATERIAL: See Note 3.2.1	MOTOROLA LABEL UL, LXN500
	GRAPHICS: SEE NOTE 3.2.2	PAINTING:	FINISH:	

DESIGNED	IGAL T.	18-AUG-17	CHECKED	EVGENY B.	18-AUG-17
DRAWN	IGAL T.	18-AUG-17	APPROVED	EVGENY B.	18-AUG-17

SCALE	SHEET		REV
2,0	1 OF 2	LB001003A	B

LB001003A01 ARTWORK

B

ASSEMBLY, LABEL,
LXN500,
EU ,REGULATORY

B20 OR B28B

LB001003A03 ARTWORK

B

ASSEMBLY, LABEL,
LXN500,
NA ,REGULATORY

B14

Motorola Internal Use Only REFER TO SHEET 1 OF THIS PRINT FOR PART NUMBER STATUS, REVISION HISTORY, COPYRIGHT NOTIC, AND FULL TITLE BLOCK INFORMATION.	SCALE 1,0	SHEET 2 OF 2	LB001003A	REV B