Figure 70: Speaker Mounting

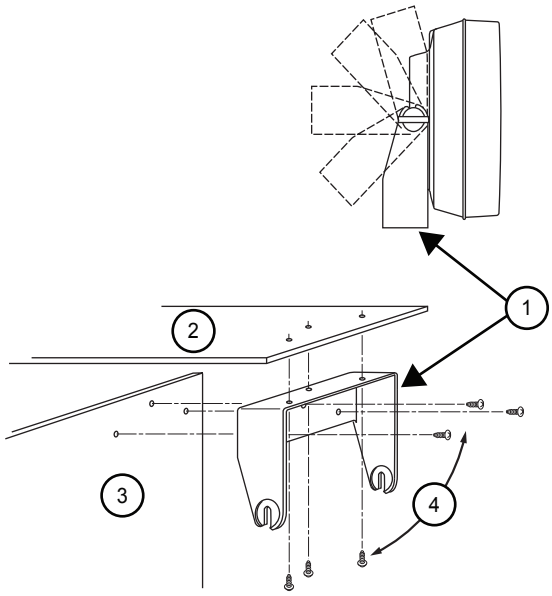

No.	Description
1	Trunnion Bracket
2	Firewall
3	Dashboard
4	EITHER way

2.5.1

Internal Speaker Disassembly

Prerequisites:

NOTICE:
This configuration is only applicable for O2 Control Heads.

Procedure:

1. Unplug the power, antenna, microphone, and all accessories connections. If the radio is a remote-mount radio, disconnect the remote-mount control cable from the front of the transceiver.
2. Remove the four screws found on the control head with a Torx T-20 bit. Discard the screws.

Figure 71: Removing the screws on the Control Head

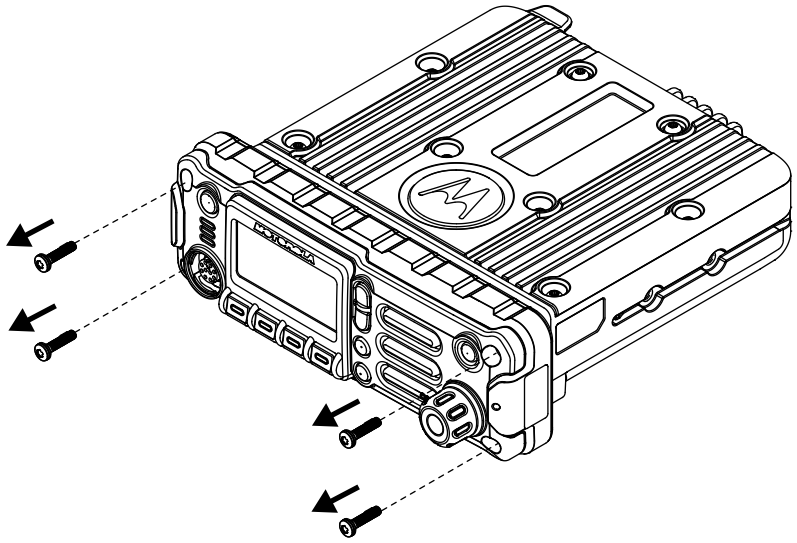

3 Firmly grasp the front panel of the control head. Carefully remove the front housing assembly from the back housing assembly. Note the position of the attached flex and do not pull on it excessively.

Figure 72: Removing the Control Head

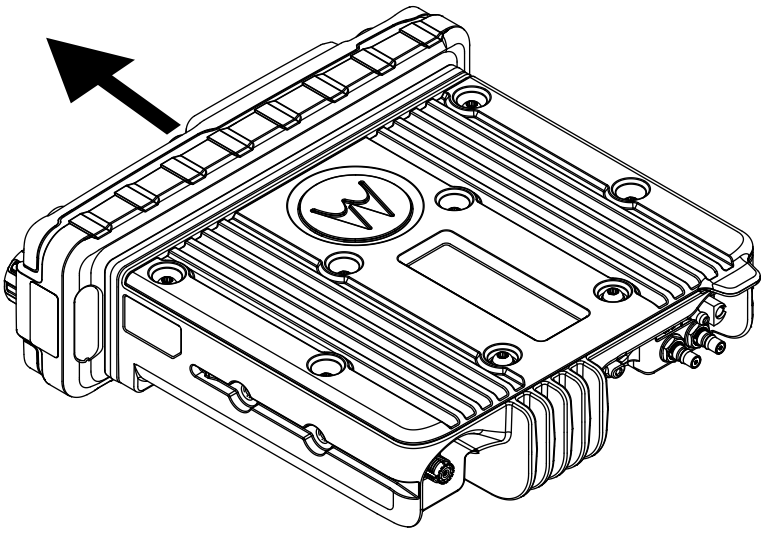

4 Put the control head face down on a clean, flat surface to avoid damaging it. Do not touch the o-ring on the back housing.

5 Carefully disconnect the speaker connector from the circuit board.

Figure 73: Disconnecting the Speaker Connector

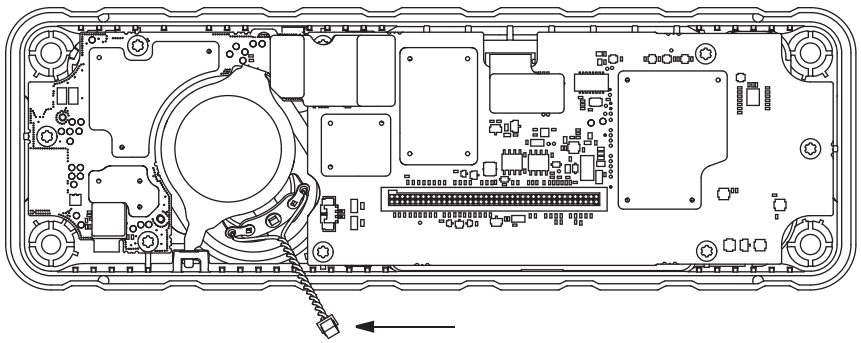

6 Reattach the front housing assembly to the back housing assembly. Ensure that the flex is returned to its original position and that the o-ring on the back housing assembly is not pinched.

Figure 74: Reattaching the Control Head

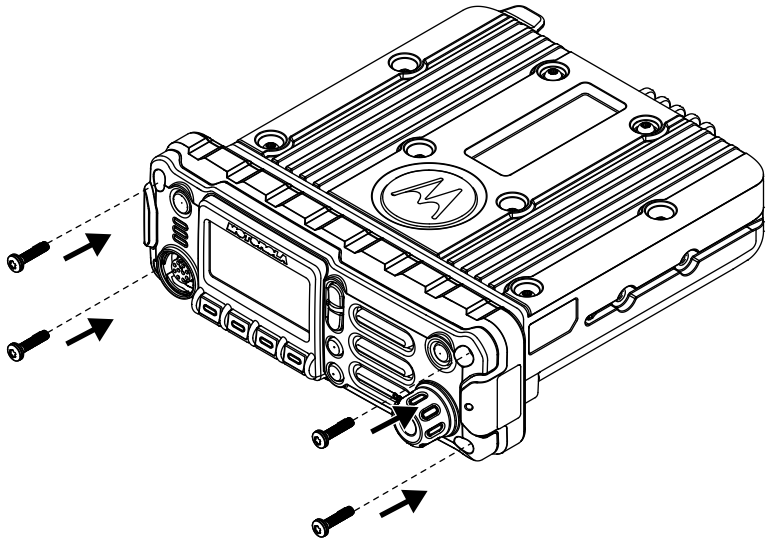

7 Secure the front housing assembly back to the back housing assembly with four new screws using the Torx T-20 bit. Apply 9 in. lbs. torque for each screw.

2.6 Microphone Hang-Up Clip

This section describes the microphone hang-up clip for mobile radios.

The hang-up clip must be within reach of the operator and close enough to the control head to prevent cable strain. Measure this distance before actually mounting the bracket. Since the bracket has a positive-detent action, you can mount the microphone at any position.

To locate the mounting holes, use the hang-up clip as a template. To avoid interference when removing the microphone, install the flathead screw at the top clip hole.

Some microphone models require the grounding of the microphone clip in order for HUB operation to work correctly. Refer to the documentation that comes with your Motorola Solutions microphone model.

NOTICE: For multi-control head configuration where only one of the control heads has a microphone, the control heads without a microphone attached must have their HUB or Monitor pin (J100-22) jumpered by a wire to GND (J100-1 or J100-14) for HUB operation to work.

2.7
RFID (Option)

A mobile radio equipped with an RFID tag allows an alternate option to track the radio. Each RFID equipped radio has an RFID tag preprogrammed with the serial number (also found on the FCC label), band, and radio model information of the radio.

Figure 75: RFID Location

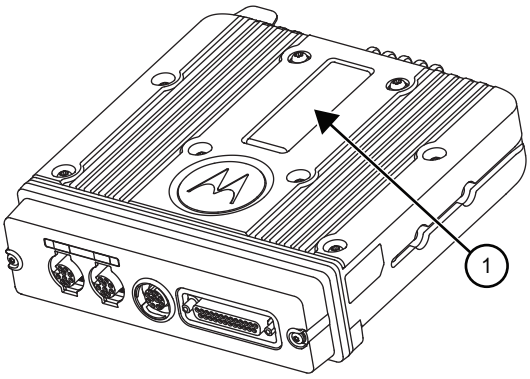

No.	Description
1	RFID Tag

2.7.1
RFID Reading

To read an RFID tag using a UHF Gen 2 RFID reader (for example, Motorola Solutions MC9090-G), open an appropriate RFID read application, point the RFID reader at the tag, and activate the RFID antenna of the reader. The RFID reader must be within 1 ft. from the tag to read.

Two variables, Read Angle and Reader Orientation, aid in the distance to read and write the RFID Tag. Read distance is independent of Tag Angle, but the reader should be as close to perpendicular to the tag as possible (Read Angle). As Read Angle increases past 60 degrees, read distance begins to decrease, and the tag becomes unreadable once Read Angle exceeds 90 degrees. RFID tag cannot be read through metal. The orientation of the reader (Reader Orientation) and the tag must be aligned to improve read and writability.

Figure 76: Read Angle for Enhanced Single Band Mobile Radio

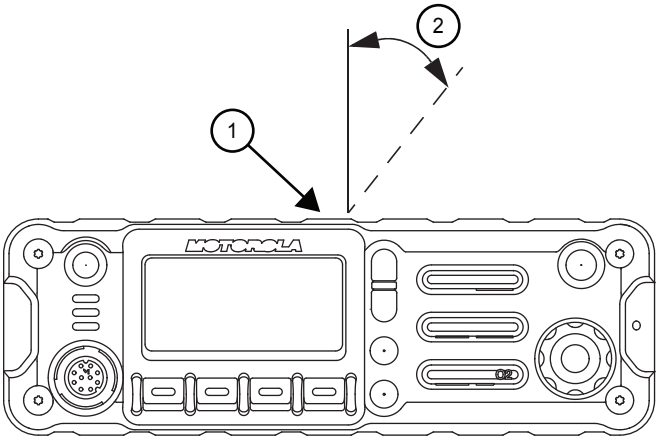

No.	Descrption
1	RFID Tag
2	Read Angle

Figure 77: Tag Angle for Enhanced Single Band Mobile Radio

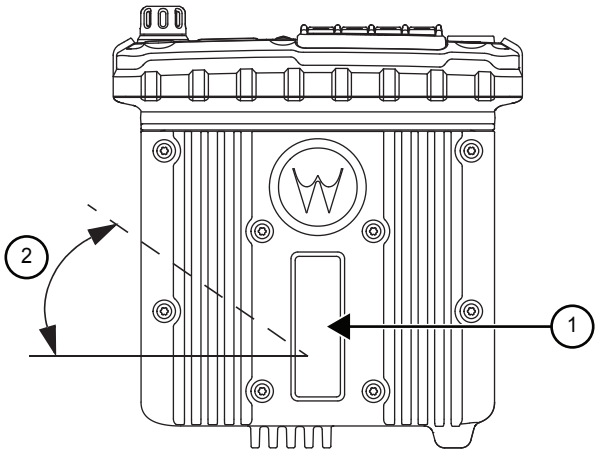

No.	Descrption
1	RFID Tag
2	Tag Angle

Figure 78: Examples of Reader and Tag Aligned (Reader Orientation)

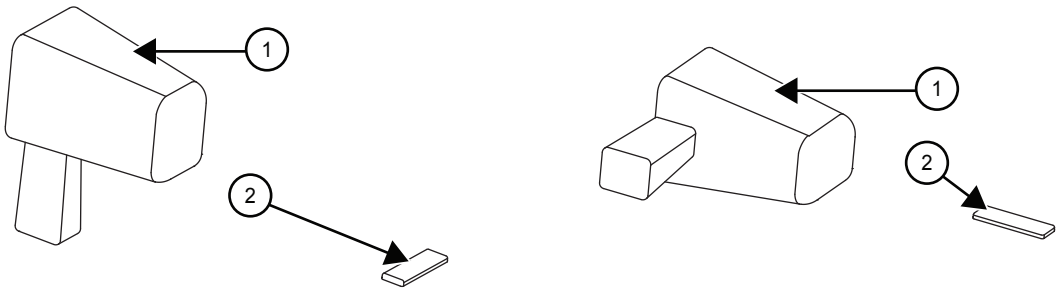

Figure 79: Example of Reader and Tag Misalignment (Reader Orientation)

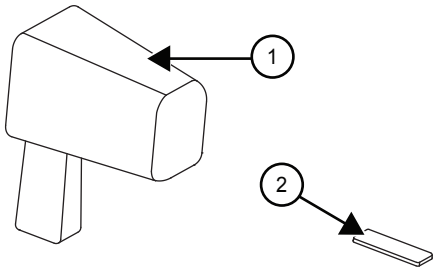

No.	Descrption
1	Reader

No.	Descrption
2	Tag

2.7.2

Programming RFID (If Equipped)

Reprogram the tag (up to 12 ASCII characters when encoded to hexadecimal format) by using any UHF Gen 2 capable RFID writer, for example, Motorola Solutions MC9090-G.

NOTICE: Follow the read direction in RFID Reading on page 74 to optimize reprogramming.

Table 11: Model Number Chart in 12-Digit ASCII Format

Model Number	Radio Tier/Band/Output Level	Last Two Digits
M22URS9PW1BN	APX 4500 700/800 MHZ	F8
M24URS9PW1BN	APX 2500 700/800 MHZ	F8
M25URS9PW1BN	APX 6500 700/800 MHZ	F5
M25URS9PW1BNI	APX 5500 700/800 MHZ	F5
M36URS9PW1BN	APX 1500 700/800 MHZ	F9

Table 12: Serial Number with Radio Band/Tier/Power

Characters	Radio Band/Tier/Power
F	700/800 and 900
D	VHF
E	UHF
R	700/800 and VHF
T	VHF and UHF
E	UHF1 and UHF2
S	700/800 and UHF
1	APX 7000
2	APX 7500 Mid Power
3	APX 7500 High Power
4	APX 6000
5	APX 6500 Mid Power
6	APX 6500 High Power
7	APX Low Tier Portable
8	APX Low Tier Mobile MP/APX 4500 MP/APX 2500 MP
9	APX Lowest Tier Mobile MP/APX 1500 MP

2.8 Completing the Installation

Follow the following steps to complete the installation.

Procedure:

1. Connect the speaker to the accessory cable.
2. Verify that the ignition sense wire is attached according to planned ignition sense.
3. Attach the accessory cable into J600.
4. Verify that the control head is attached to either the TIB or the CAN extension cable.
5. Attach the power cable to the back of the transceiver.

Chapter 3

Universal Relay Controller Installation

The Universal Relay Controller (URC) is an extension of an orderable accessory for O7 or O9 control head.

URC is used to control high power switching peripherals, for example, lightbar. URC works on all power application controlled lightbars. URC is connected to the transceiver GCAI port. The URC design consists of a microcontroller and uses ten relays to control the switching device. A separate ground for isolation exists between the relay and MCU sections, which is provided by the use of iCoupler from Analog Devices. Each relay is connected to an output with 15 A fuse. The maximum load allowed on each output is 12 A. Two cables, each with the maximum of 60 A, can be used to connect to the input connector at the bus bar. Each cable is connected with a 60 A circuit breaker. One-wire EEPROM is employed to enable GCAI to recognize the URC accessory ID. CPS can be used to program the relay patterns.

When installing URC, make sure to plan the installation carefully and leave more room in the front and rear of the box for cabling and accessory connections; and also to the sides of the radio so that you may access and install the trunnion screws.

The recommended mounting location for URC is in the car trunk, either next to the transceiver or within the area not further than 4.5 m away from the transceiver. Ensure that sufficient cooling is provided. Do not cover URC with baggage, blankets, and so on.

CAUTION: Do not backfeed power into URC.

3.1

Universal Relay Controller Mounting

The mounting location must be accessible and visible. Select a location that permits routing the cable as directly as possible.

Prerequisites:

NOTICE: For optimum URC performance, orient the mounting trunnion as shown in the following figure.

Figure 80: Universal Relay Controller Orientation

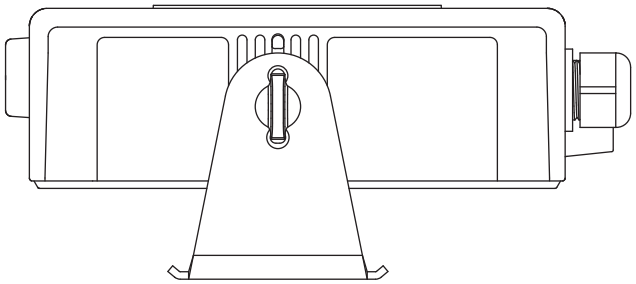

An adjustable trunnion, which allows several mounting positions, is supplied for mounting the URC. The installation must not interfere with the operation of the vehicle or its accessories.

Procedure:

1. Use the URC trunnion as a template to mark the mounting holes. Then, drill 5/32 in. holes. If mounting on a plastic surface, use a metal backing plate.
2. Attach the trunnion bracket using all four 10 – 16 in. x 5/8 in. self-tapping screws provided.
3. Temporarily install the URC (adjust for proper viewing angle) and fasten it to the trunnion with two wing screws. Test the installation to ensure that the unit is securely locked in place.

Figure 81: Universal Relay Controller Installation Exploded View

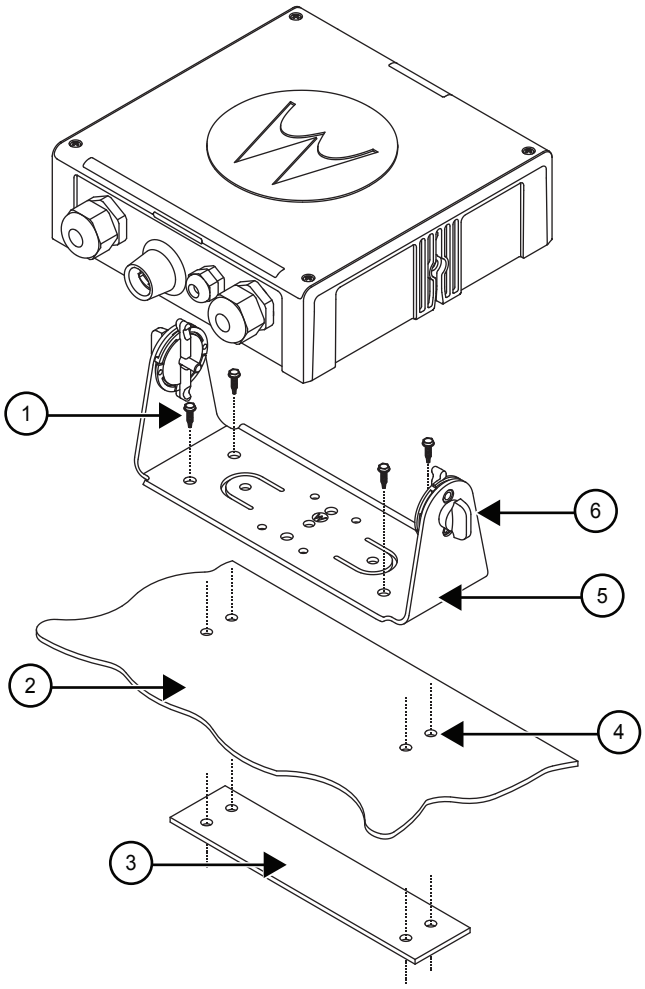

No.	Description
1	Use four mounting screws on all installations
2	Mounting surface
3	Metal backing plate (not supplied) **IMPORTANT:** Use this plate if mounting trunnion on plastic or unstable surface.
4	Drill four 5/32” holes in mounting surface
5	Trunnion

No.	Description
6	Adjust the universal relay controller to desired angle and secure with wing screws

3.2 O7/O9 Universal Relay Controller Cable Assembly

This sections provides the instruction for URC cable assembly.

3.2.1 Installing the Power Cable

Procedure:

1. Remove the cap nut of power cable gland assembly, and insert the power cable through the cap nut and neoprene seal in the cable gland body. Use power cable with either AWG 6 or AWG 8 only (recommended OD range of cable is 5.5 mm to 9 mm) that is able to withstand 80 A and 50 A respectively, to ensure water sealing of the controller. User can decide to install one or two power cables based on the requirements. The power cables (A+) are not supplied.
2. The loose end of the power cable with cable strip length 7.94 mm (5/16”) is then placed on the power lug and secured down by a set screw. The cap nut is then reassembled with tightening torque 18 lb-in.
3. The other end of the power cable should be connected to circuit breaker (Motorola Solutions part number 40012006001) end which indicates "AUX" and then, to power supply on the other end which indicates "BAT", instead of connecting to power supply directly.
4. Repeat step 1 to step 3 to install the second power cable, if required.
5. If only one power cable is installed, it is recommended to cover the other side of the power cable gland with power cable gland seal with tightening torque 18 lb-in.

3.2.2 Installing Ground Cable

Procedure:

1. Remove the cap nut of ground cable gland assembly, insert the ground cable through the cap nut, and then reassemble the cap nut. Use ground cable with AWG 14 only (recommended OD range of cable is 2 mm to 4 mm) that is able to withstand 5 A. The ground cables (A+) are not supplied.

   NOTICE: The ground is used to switch the relays, and not act as a ground to the actual device being controlled.

2. The loose end of the ground cable with cable strip length 7.94 mm (5/16”) is then connected to a two-pin terminal block. Both pins on the terminal block are inter-connected and either pin can be used. The cap nut is then reassembled with tightening torque 7 lb-in.

Figure 82: Power and Ground Cable Glands

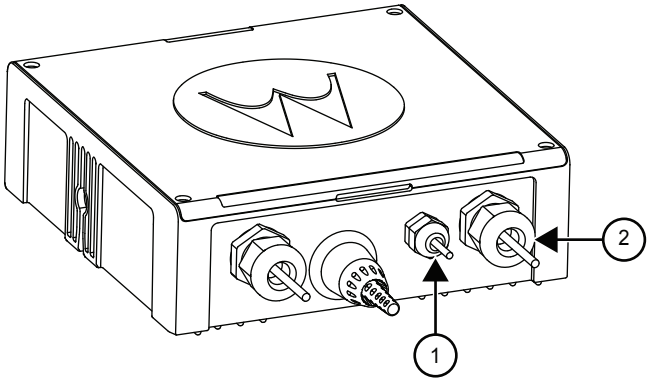

No.	Description
1	Ground Cable Gland
2	Power Cable Gland

Figure 83: Cable Gland Assembly with Gasket

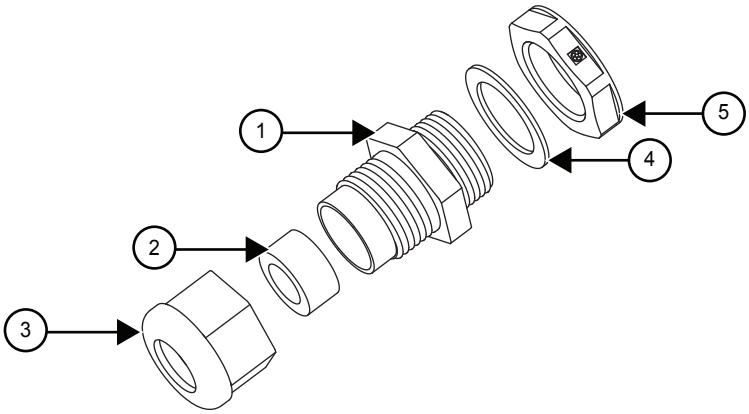

No.	Description
1	Cable Gland Body
2	Neoprene Seal
3	Cap Nut
4	Gasket, Cable Gland
5	Counter Nut

3.2.3
Installing the Wires

Procedure:

1. Assemble the wires into the lightbar gasket retainer and lightbar gasket. The URC can support lightbars through control wires with outer diameter ranging from 1.52 mm to 3.77 mm (0.06 in. to 0.148 in.), with wire gauges ranging from AWG 12–20.

2 Each individual loose wire (before stripping off the wire jacket) is inserted one at a time through the chassis. Ensure that the lightbar wire is straight before inserting the wire into the chassis. The radial gasket seals each of the wire individually. When a thick wire (for example AWG 14 wire or wire OD > 2.90 mm) is inserted through the chassis, there is potential tearing at the rubber gasket. Remove the rubber gasket residual.

3 Thin wires 2.5 mm and below should be dressed into the retention feature using a black stick. Thick wires above 2.5 mm should be routed above the retention feature. Strip off the wire until 7.94 mm (5/16 in.) after the wire is inserted into the URC, and install the wire into the respective lightbar terminal block.

Figure 84: Wires Installation

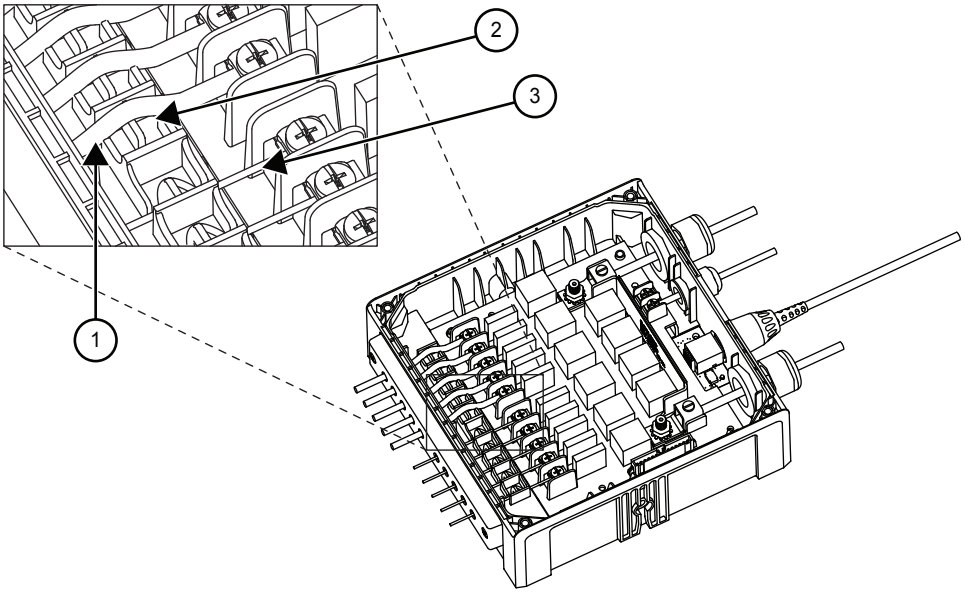

No.	Description
1	Lightbar Wire with Diameter above 2.5 mm
2	Lightbar Wire with Diameter 2.5 mm and below
3	Wire Retention Feature

Figure 85: Wire Installation with Black Stick

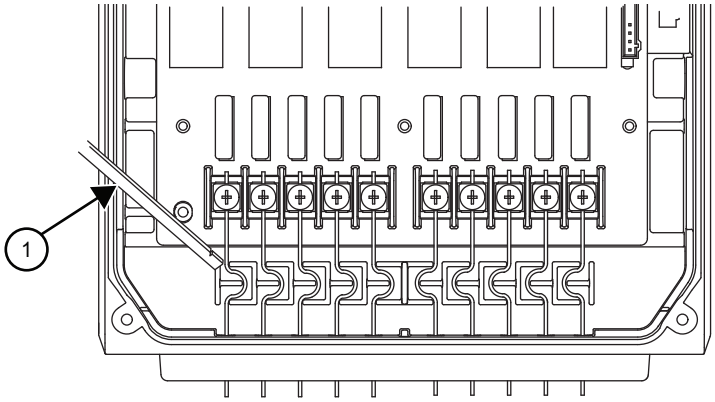

No.	Description
1	Black Stick

4 Cover the lightbar gasket retainers hole with seal, gasket, and ground cable gland, if no wire is inserted.

5 The lightbar gasket should be replaced at each reassembly of the wire.

NOTICE: Use of other cable gauges except as recommended in this manual may result in water intrusion. Any reassembly of wire needs a new lightbar gasket replaced. If the current loading for one wire is higher than 12 A, the wires should be split before being assembled to the URC system. Wires kit (PMKN4109_) is provided to ease installation of the URC. Incorrect use of the wires kit, for example, improper connection at external loose end wires, may impact the robustness of the URC.

6 Remove the wires and gasket residual inside the URC after the wire installation, before closing the top housing of the URC.

3.2.4
Installing the O7/O9 to URC Cable

The O7/O9 to URC cable (Motorola Solutions part number 3064153H02) can be assembled either before or after reassembling the top housing.

Procedure:

1 Insert the RJ45 port of the cable into the RJ45 connector on the URC and turn the locking collar 90° to the right to ensure that it is locked properly.

2 Test if the cable is locked properly by trying to pull out the cable.

Figure 86: O7/O9 to URC Cable Installation

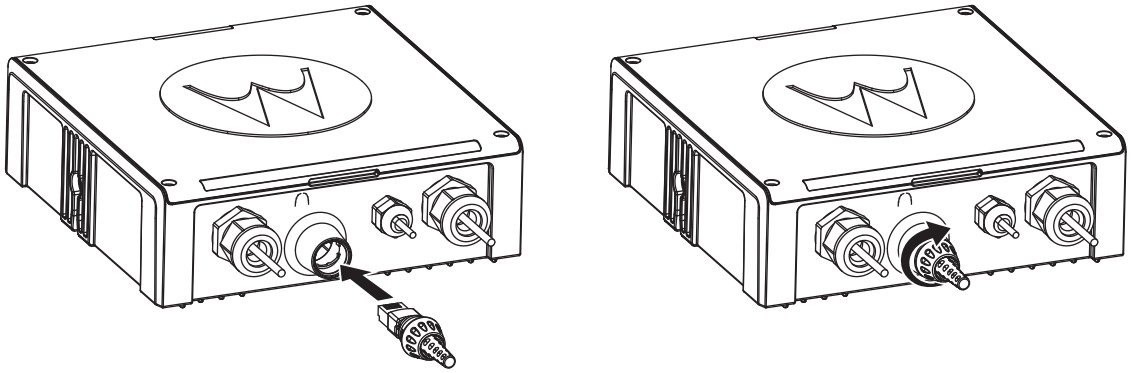

Chapter 4

Options and Accessories Installation

This chapter provides the options and accessories installation for dash mounted and remote mounted configurations.

4.1

Dash-Mount Accessory Installation

For dash-mounted configurations, the accessories must be installed through the accessory connector assembly that is on the rear of the radio, next to the power connector. Motorola Solutions-approved accessories are supplied with male terminals crimped to a 20-gauge wire designed to fit the plug of the accessory connector assembly.

Insert the male terminal into the accessory connector assembly in the appropriate location and connect the accessory connector assembly in the rear accessory port. Do not use other generic terminals in the plug. Generic terminals cause electrical intermittences and may damage the plug.

4.1.1

Dash-Mount Emergency Pushbutton or Footswitch Installation

Mount the footswitch using the hardware that comes with the kit. Open the accessory cable connector housing; remove the jumper wire. Connect the emergency switch wires to pins 14 and 15 (see Figure 87: Emergency Switch Wiring Diagram on page 84). Close the connector housing; route the finished cable from the switch location to the control head location.

NOTICE: The emergency footswitch should be attached with A+ unattached.
A+ should be attached after successfully securing the screws in the connector.

Figure 87: Emergency Switch Wiring Diagram

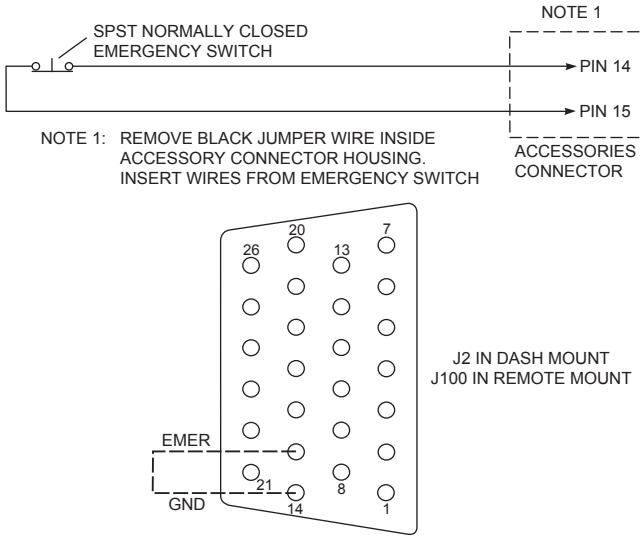

CAUTION: The radio is sold with correct accessory cables and jumpers to have emergency deactivated by default, regardless of the setting in Customer Programming Software (CPS). However, if cables are not used, or if jumpers are removed without replacing with an emergency accessory button/switch at one of the accessory ports, the radio powers up upon the application of A+. The display may not show an indication that the radio is on, and this condition can result in an incorrect operation of the radio and excessive current drain of the vehicles battery when the engine is off.

4.1.2
Dash-Mount Horn and Lights (External Alarms) Relays

Prerequisites: For installations that use the horn/lights option, select a suitable location for mounting (normally under the dash). Referring to Figure 88: Horn/Light Wiring Diagram on page 85, perform the following procedure:

Procedure:

1. Horn Relay – Connect the relay contacts across the horn ring switch, typically found in the steering column. Open the accessory cable connector and connect the two control wires (male pins) into locations 18 and 24 of the connector.
2. Lights Relay – Connect the relay across the head lamp ON/OFF switch, typically found in the steering column. Open the accessory cable connector and connect the two control wires (male pins) into locations 19 and 24 of the accessory connector.

Figure 88: Horn/Light Wiring Diagram

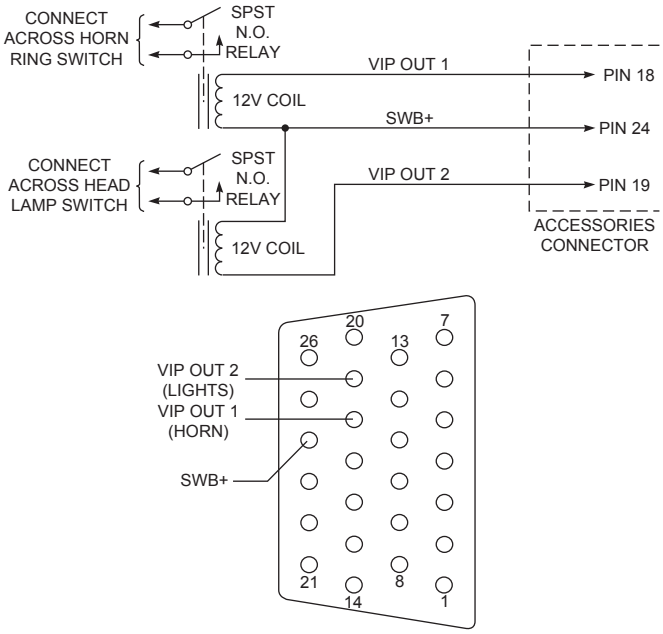

4.2
Installing Remote-Mount Accessory

Procedure:

1. Select an appropriate place to mount the option or accessory hardware.
2. Route the accessory-to-control head cables under floor coverings or behind panels so that the vehicle occupants do not snag or break the wires.

3 Attach wires from the accessory to the appropriate wire on the VIP cable (see Table 13: VIP Output Connections on page 91 and Table 14: VIP Input Connections on page 92).

CAUTION: The radio is sold with correct accessory cables and jumpers to have emergency de-activated by default, regardless of the setting in Customer Programming Software (CPS). However, if cables are not used, or if jumpers are removed without replacing with an emergency accessory button/switch at one of the accessory ports, the radio will power up upon the application of A+. The display may not show an indication that the radio is on, and this can result in an incorrect operation of the radio and excessive current drain of the vehicle battery when the engine is off.

4.2.1
Installing Emergency Pushbutton or Footswitch

When and where to use:
Mount the switch using the hardware that comes with the kit. Connect the button/switch wires to a ground pin and the emergency pin, removing the default jumper wire in the rear accessory cable. The button/switch shorts the pins when inactive. When the button/switch is pressed, its contact opens, the emergency path is ungrounded and pulled-high inside the radio transceiver, and detected by the processor. If an emergency accessory is used at either (or both) J2 connector and J626 connectors, all jumper wires, shorting emergency to ground, must be removed so the button/switch press can be detected.

In additional to removing the default jumper wires in accessory cables, remove a jumper part on the printed circuit board of the TIB, in order for the button/switch to be detected. On the TIB PCB (both mid power and high power use the same TIB), a 0 Ω jumper is placed by default so that the radio does not go into emergency when no cable is attached at either J2 or J626 in remote mount configuration. This jumper part, JU344, must be removed if either or both J2 and J626 have any type of emergency cable and button/switch attached. Otherwise, the processor will never see emergency become un-grounded.

Figure 89: Emergency Jumper Removal in Remote Mount

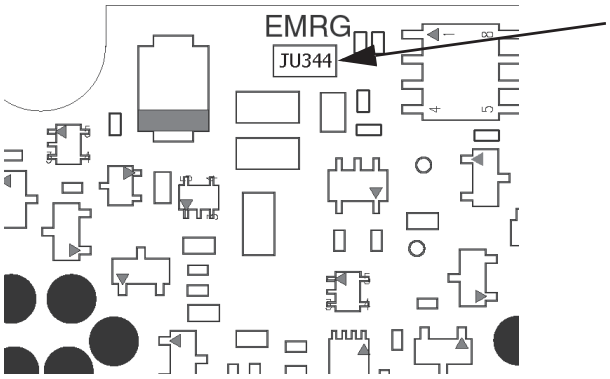

Procedure:

1 Turn off power to the radio system.

2 Detach the TIB from the radio transceiver.

3 Detach the TIB flex.

4 Remove TIB PCB from the plastic housing using TORX T10 screwdriver. Refer to the disassembly procedure in the Basic Service Manual.

5 Locate JU344, See Figure 89: Emergency Jumper Removal in Remote Mount on page 86.

6 Remove JU344 from the TIB PCB using a soldering gun. Clean off excess solder.

7. Reassemble the TIB following the Basic Service Manual procedure. Use 6-8 in-lbs torque on each screw. Remember to include the TIB O-ring gasket.
8. Reattach the TIB flex.
9. Reattach the TIB to the radio transceiver.
10. To secure the TIB to the radio transceiver, apply 6-8 in-lbs of torque to each screw .

4.2.2
Horn (External Alarm) Relay Installation

Mount the horn relay in a suitable location (normally under the dash). Connect the relay contacts across the horn ring switch, typically found in the steering column. Connect the two control wires to a SW B+ pin and a VIP OUT pin on the VIP connector.

4.2.3
Lights (External Alarm) Relay Installation

Mount the light relay in a suitable location (normally under the dash). Connect the relay contacts across the head lamp ON/OFF switch. Connect the two control wires to a SW B+ pin and a VIP OUT pin on the VIP connector.

4.2.4
Gunlock Installation

The O7 or O9 control head can program up to three gunlocks through the programmable buttons.

You can set the time for the momentary trigger using the time-out trigger button. Connect the relay contacts across the gunlock switch to install the gunlock. Connect the two control wires to a SW B+ pin and a VIP OUT pin on the VIP connector.

Install a failsafe or redundant bypass switch for the gunlock. It is suggested to use a separate timer switch or a manual push-on button switch to activate the gunlock. Connect the switch from the supply to the gunlock directly, as shown in Figure 90: Gunlock Switch Redundancy Diagram on page 88. Place the manual button at a suitable and reachable location, yet not easily seen.

Figure 90: Gunlock Switch Redundancy Diagram

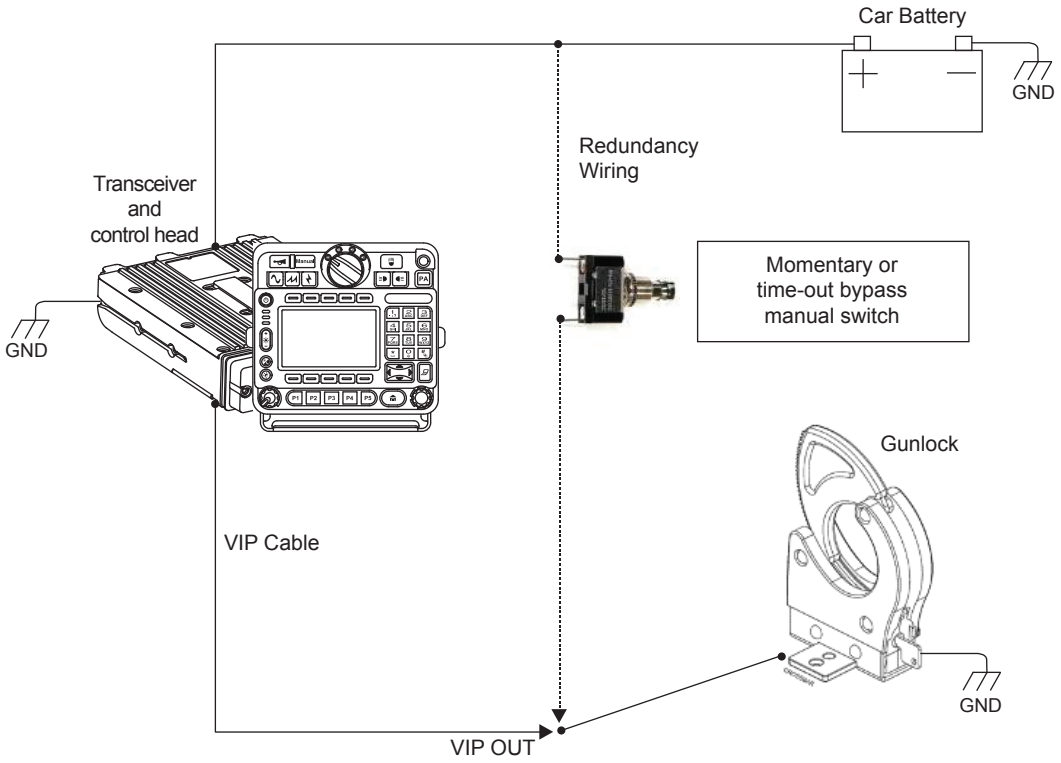

4.2.5

Horn-Ring Transfer

Configure the Horn Relay for either Negative Contact or Positive Contact as shown in “section 6.3” of the siren/PA manual (6881093C18).

Program the designated VIP-OUT line for “Horn-Ring Transfer” and program the designated VIP-IN line for “Horn-Ring”. Figure 91: Siren/PA Horn-Ring Connections on page 89 shows wiring diagrams for connecting the Horn-Ring through a transfer relay for both negative and positive ground systems. Refer to the siren/PA manual (6881093C18) for more information.

Figure 91: Siren/PA Horn-Ring Connections

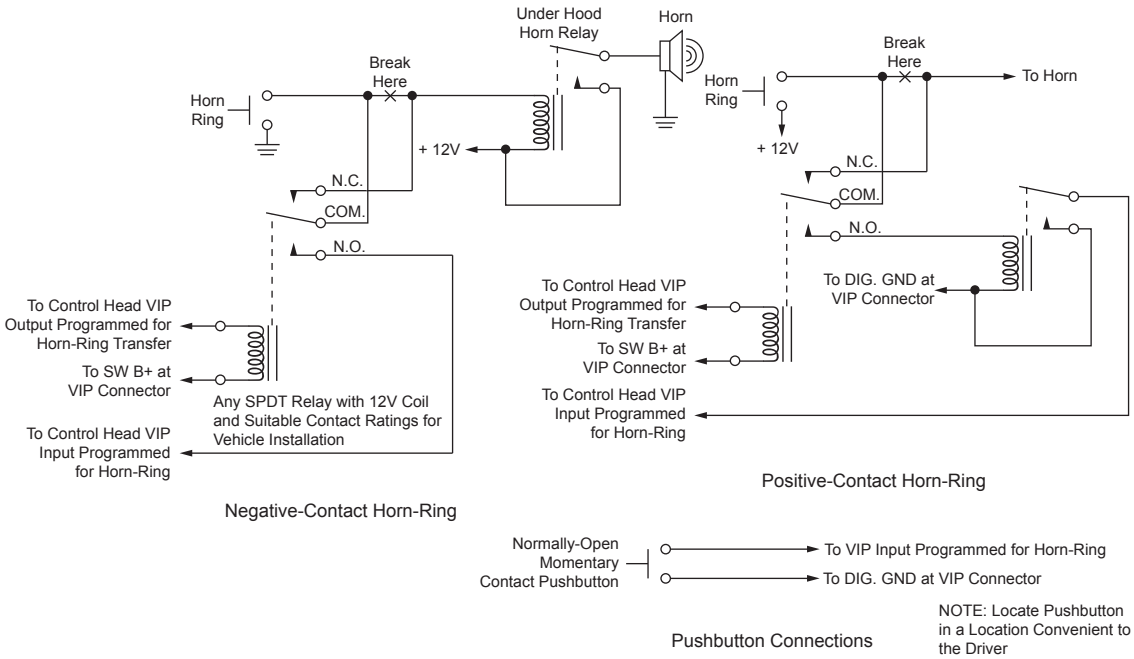

4.2.6
Record Audio Out Jack of Transmit and Receive Audio

The use of Power Cable kit HKN6187_ (see Figure 64: HKN6187_ Power Cable with External Speaker Connector, Record Audio Output Jack (2.5 mm) and Earphone Jack (2.5 mm) on page 64) provides access to both the transmitted and the received audio speech. This audio can be recorded with a standard tape recorder using a 2.5 mm connector.

4.2.7
Earphone Jack

The use of Power Cable kit HKN6187_ (see Figure 64: HKN6187_ Power Cable with External Speaker Connector, Record Audio Output Jack (2.5 mm) and Earphone Jack (2.5 mm) on page 64) allows the use of a standard earphone/headset instead of the external speaker. Once a cable is plugged into this 2.5 mm jack, the external speaker attached at the control head turns mute.

4.2.8
USB Data Cables

It is recommended that the USB 1.5 m data cable HKN6163_ is used for both dash mount configurations (at J2 connector) and for remote mount configurations (at J100 connector) because the HKN6163_ has the emergency jumper present, which is necessary for correct dash mount configurations.

For interfacing at the MMP port, use Cable HKN6184_ which is a USB device cable. The USB 4 m (15 ft.) data cable HKN6172_ is recommended for remote mount configurations only (at J100).

If the customer intends to use the HKN6172_ for dash mount configurations (at J2), the cable 26-pin connector must be opened and an emergency jumper-wire placed across pins 14 and 15. Refer to Figure 87: Emergency Switch Wiring Diagram on page 84.

4.2.9
RS232 Cables

RS232 cables are not compatible with Customer Programming Software (CPS) radio reading or programming, but can be used for interfacing with RS232 accessories or RS232 computer programs.

HKN6122_ is an RS232 serial COM port computer interface cable from J600 connector. The followings are the RS232 cables :

- HKN6160_ is a 6 feet dash RS232 cable from J2 connector
- HKN6161_ is a 20 feet dash RS232 cable from J2 connector
- HKN6183_ is a 4 meter cable from MMP connector

4.3
Vehicle Interface Port Overview

The Vehicle Interface Port (VIP) allows the control head to operate outside circuits and to receive inputs from outside the control head. There are three VIP outputs which are used for relay control. There are also three VIP inputs which accept inputs from switches (remote mount only).

Figure 92: Remote Control Head Pinouts

Radio Pin Number	VIP Cable (HKN6196_) Wire Color	Function
J400-1	RED	SWB +
J400-2	GREEN	GND
J400-3	-	NO PIN
J400-4	-	"VIP" detect: GPIO=HIGH
J400-5	BLUE	VIP_OUT_1
J400-6	YELLOW	VIP_OUT_2
J400-7	BLACK	VIP_OUT_3
J400-8	WHITE	VIP_IN_1 (VIP_IN GPIO)
J400-9	ORANGE	VIP_IN_2 (VIP_IN GPIO)
J400-10	VIOLET	VIP_IN_3

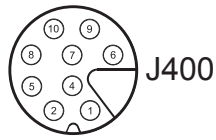

VIP CONNECTOR PIN-OUT

Figure 93: HKN6196_ VIP Connector Detail

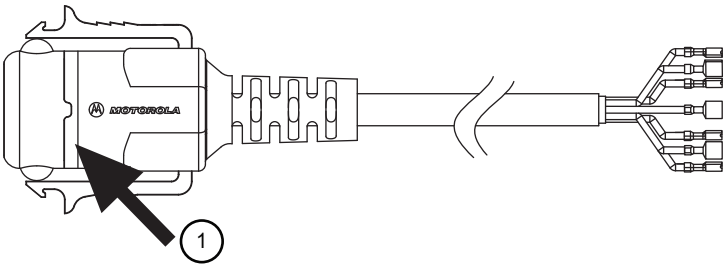

No.	Description
1	Yellow Ring

4.3.1
VIP Output Connections

The VIP output pins are on the back of the control head (J100 and J400), or the rear accessory port (J2), as shown in Wiring Diagrams on page 34, Figure 98: Rear Accessory Connector Audio

Configuration on page 96 and Figure 99: Rear Accessory Connector Data Configuration on page 96, respectively.

Use these connections to wire control relays. One end of the relay should connect to switched B+ voltage, while the other side connects to a software controlled ON/OFF switch inside the control head. The relay can be normally on or normally off depending on the configuration of the VIP outputs. There are three VIP output connections, as follows:

Table 13: VIP Output Connections

VIP OUT NUMBER	J400		J2		J100	
	SW B+ Pin Number	On/Off Switched Pin Number	SW B+ Pin Number	On/Off Switched Pin Number	SW B+ Pin Number	On/Off Switched Pin Number
1	Red 1	5 (Blue)	24	18	24	18
2	Red 1	6 (Yellow)	24	19	24	19
3	Red 1	7 (Black)	NA	NA	NA	NA

The function of these VIP outputs can be field programmed in the control head. Typical applications for VIP outputs are external horn/lights alarm and horn ring transfer relay control. For further information on VIP outputs, see the control head programming manual.

VIP OUT 1 and VIP OUT 2 can be accessed from either J100 or J400 connectors to allow a previously wired VIP OUT at J2 to move easily to J100. However, when any cable is inserted into J400, J100 VIP OUTs are disabled.

When installing relays to the VIP OUT lines, a diode is necessary to prevent damage to the transistor or MOSFET, due to “back EMF” when the field collapses on the relay coil. Some vendor relays already come with this diode built-in, and other relays require the customer to install it. Figure 94: Relay Coil on page 91 shows the proper placement of the diode across the relay coil. The transistor or MOSFET is located inside the radio or the D.E.K. box.

Figure 94: Relay Coil

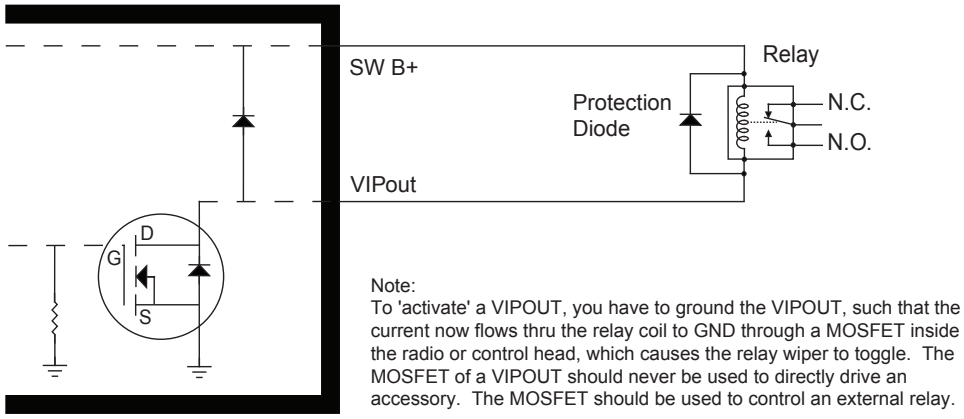

NOTICE: See Replacement Parts Ordering on page 132 to order relay for your VIP OUT applications. Example relay hardware: TLN4533_ (relay without internal diode), HLN6969_ (relay with internal back EMF protection diode), and HKN4258_ (relay wiring cable).

4.3.2

VIP Input Connections

The VIP input pins are only available on the back of the control head (remote mount).

These connections control inputs from switches. One side of the switch connects to ground while the other side connects to a buffered input on the control head. The switch can be normally closed (NC) or normally open (NO) depending on the configuration of the VIP inputs. The following are the three VIP input connections:

Table 14: VIP Input Connections

VIP IN NUMBER	J400		J2	
	Ground Pin Number	On/Off Switched Pin Number	Ground Pin Number	On/Off Switched Pin Number
1	2 (green)	8 (white)	NA	NA
2	2 (green)	9 (orange)	NA	NA
3	2 (green)	10 (violet)	NA	NA

NOTICE: Remote Mount requires the VIP cable to be attached to J400.

MCH installations require the VIP inputs to be connected to the head assigned ID #1. See Setting the Initial Control Head ID on page 56 for further information.

CAUTION: ASTRO mobile radios equipped with the following features are able to transmit automatically, even if the radio is turned off:

- Automatic Vehicle Location
- Other Special Data Products

All ASTRO mobile radios have accessory connector pins 14 and 15 connected together to allow the radio to power down. Opening this connection by removing the accessory connector, or otherwise failing to maintain a normally closed path, could, if left unchecked, drain the vehicle battery, and possibly cause transmissions to occur.

4.4

Compatibility of Emergency when Attaching a Siren

Procedure:

1 When using emergency footswitch or pushbutton with siren/PA configuration, REMOVE pin 8 (emergency) from the siren connector of the HKN4363_ siren cable.

Figure 95: Field adjustment for Emergency Operation with Siren Accessory

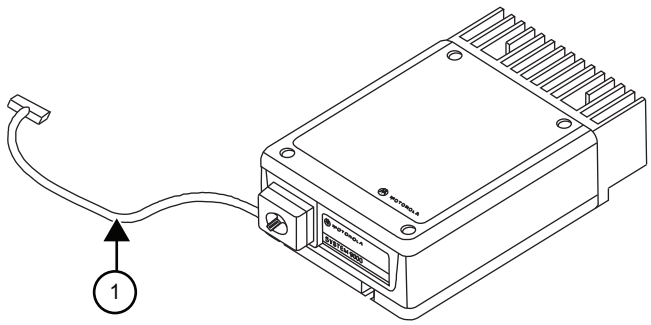

No.	Description
1	Siren Cable

2 Remove the knob from the siren/PA cable connector.

3 Remove all four screws from the connector in the siren/PA cable.

4 Open the connector cap and locate pin 8.

5 Using the contact removal tool (6684690C02), remove pin 8 from the connector.

6 Put the connector cap in place and proceed to reinstall the four screws and the knob.

Figure 96: Location for Pin 8

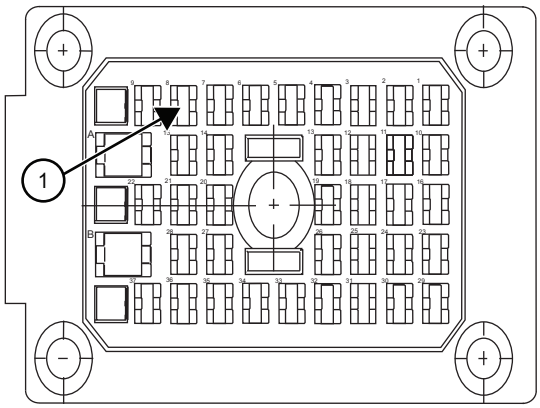

4.5

Accessory Connector Assembly Details (P2)

The APX mobile accessory connector assembly is mounted on the right rear of the radio, opposite the antenna and next to the power connector.

It is fastened to the radio via jackscrews and held together by the two cover screws. It is a multi-functional connector that allows for many different types of adaptations. All approved accessory wires are securely strain-relieved through the exiting slots at the back of the accessory connector assembly. The terminations that are supplied with all accessories are fully engaged and locked into the plug connector (6680163F01). They can also be detached for service with the assistance of a terminal removal tool. The accessory connector assembly can be serviced multiple times for future installation upgrades.

The accessory connector assembly, supplied with every APX mobile dash-mounted radio, is equipped with a 26-pin plug assembly, two covers, two jackscrews, two cover screws, one emergency jumper, one ignition sense cable assembly, and one speaker pigtail. The jumper is provided to complete the circuit for emergency mode. If this circuit becomes open, the radio is set to emergency mode.

3980034F05 is the crimping pin part number for use with any wires used inside the accessory cable connector.

4.5.1
Disassembly and Assembly

This section provides the detailed disassembly and reassembly information.

4.5.1.1
Disassembly

Procedure:

1. Disconnect the negative terminal from the vehicle battery. Make sure that the battery cable is secured such that it cannot power the vehicle electrical system.
2. Unscrew both jackscrews completely.
3. Pull the accessory connector assembly out from the radio.
4. Loosen both cover screws, but do not remove them completely.
5. Pull the jackscrews away from the plug and hold them back.
6. Pry apart the accessory connector assembly covers.
7. Attach any new wire to its proper location by pushing in the male terminal. When you hear a pop, the wire is engaged. To verify that the wire is engaged, tug gently on the wire and be sure that it does not come out. To avoid severe damage to the plug, do not overload the wire.

4.5.1.2
Assembly

Procedure:

1. Place the plug-in one cover. Be sure that the flange of the plug is in the slot of the cover. See Figure 97: Exploded View of Accessory Connector Assembly (HLN6863_) on page 95.
2. Push the jackscrew through the plug to hold it in.
3. Position each wire across the strain-relief features in the cover. Avoid damaging loads on the plug by allowing some slack in each wire in the accessory connector wire chamber.
4. Place the second cover onto the plug. Be sure that the flange is protruding through both covers.

Figure 97: Exploded View of Accessory Connector Assembly (HLN6863_)

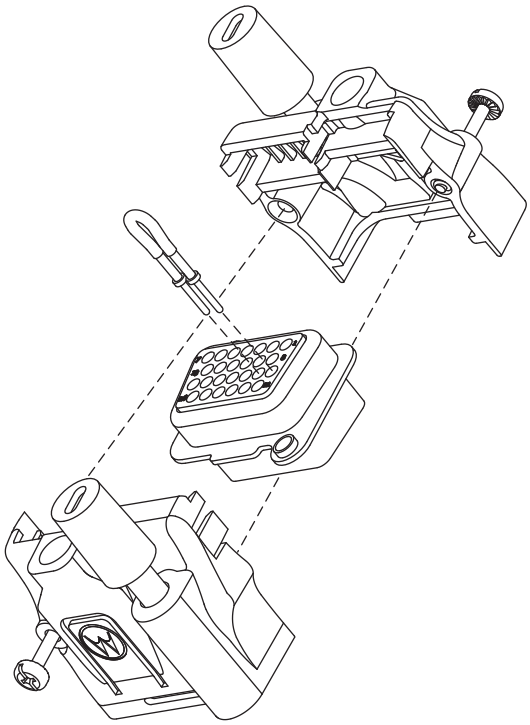

5 Squeeze the covers together bending the wires in the strain-relief features. You may need a pair of pliers to seat the assembly covers.

6 Once the covers are fully seated, fasten them with the cover screws. Tighten the screws firmly but do not over-tighten them. Be sure that none of the wires are pinched.

7 Reattach the accessory connector assembly to the back of the radio and fasten it by finger-tightening the jackscrews to prevent any loosening.

NOTICE: See *Enhanced Single Band Mobile Radio Basic Service Manual* for detailed descriptions of these pins and other connectors located in the mobile radio.

4.5.2
Adapter Cable

If you are planning on installing a mobile radio as a replacement for an ASTRO Spectra radio, the following adapter cables are available:

Table 15: Adapter Cable

Part Number	Description
HKN6158_	Cable, Audio Adapter Kit
HKN6159_	Cable, Data Adapter Kit

NOTICE: The adapter cables can only be connected to J2 in the rear of the transceiver.

Use the HKN6158_ audio adapter kit cable if your vehicle was formerly wired for an ASTRO Spectra or ASTRO Spectra Plus radio, and use the rear cable pins as shown in the following figure.

Figure 98: Rear Accessory Connector Audio Configuration

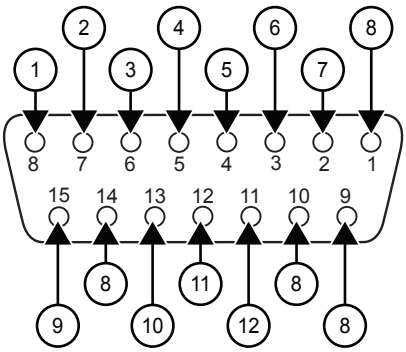

No.	Description
1	GND
2	SPKR LO-
3	SPKR HI+
4	IGNITION
5	SWB+
6	VIP OUT 2
7	EMER
8	N.C.
9	MIC HI
10	PTT
11	VIP OUT 1
12	DISC. AUD

Use the HKN6159_ data adapter kit cable if your vehicle was formerly wired for an ASTRO Spectra or ASTRO Spectra Plus radio, and used the rear cable pins as shown in the following figure.

Figure 99: Rear Accessory Connector Data Configuration

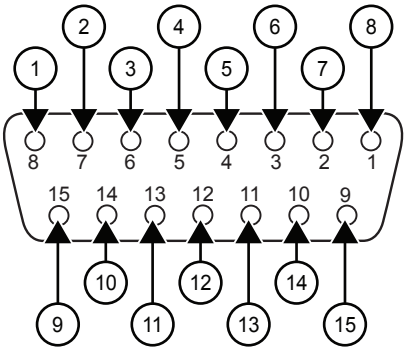

No.	Description
1	DIG GND
2	SPKR LO-

No.	Description
3	SPKR HI+
4	IGNITION
5	SWB+
6	VIP OUT 2
7	EMER
8	CTS-ASTRO RTS_DCE
9	RTS- ASTRO CTS_DCE
10	BUS+
11	TX-ASTRO RX_DCE
12	VIP OUT 1
13	RX-ASTRO RX_DCE
14	BUS-
15	BUSY

You must attach the correct adapter. Installing the wrong adapter may damage the data communication circuitry inside your radio. If you are unsure of the pinout of your former wiring harness, consult your ASTRO radio installation technician.

4.6

Memory and Three-Day Secure Key Retention Option

For the installation or removal of the Memory or 3-Day Secure Key Retention Options (MHLN6999_ and MHLN7000_), see the *Enhanced Single Band Mobile Radio Basic Service Manual*.

NOTICE: The Three-Day Secure Key Retention Option is not applicable for APX 2500/APX 4500/APX 1500 Enhanced Single Band Mobile Radio.

Chapter 5

Motorcycle Radio Installation

This chapter covers the motorcycle radio installation. The motorcycle radio installation is not applicable for APX 4500/APX 1500 radios and O9 control heads.

5.1 Motorcycle Radio Description

The motorcycle model includes all the same components in the standard radio, with the exceptions listed in the model charts in the Enhanced Single Band Mobile Radio Basic Service Manual (MN005718A01).

5.1.1 Transceiver Enclosure

The transceiver is mounted in the weather-resistant enclosure that consists of a bottom housing and a hinged top cover.

The top cover has a locking latch that requires a key to open. The enclosure is mounted above the rear motorcycle wheel, oriented so that the lock is forward and the hinged cover opens toward the rear of the motorcycle. The bottom housing has a grommeted hole for cable entry and weep holes to permit water drainage.

The enclosure is mounted on the motorcycle with a universal mounting plate and shock and vibration isolators. A large, braided ground-strap (installed between the mounting plate bolts and the motorcycle frame) grounds the transceiver.

5.1.2 Control/Display Unit

All radio functions, except push-to-talk (PTT), are activated from the weather-resistant control head.

The control head and the external speaker are mounted for easy access near the center of the handlebars. The control head is positioned for unobstructed viewing, and it may be tilted on the horizontal axis for ease of viewing. The microphone cable port on the front of the control head is plugged and is not used.

5.1.3 Control Head Cable

The control-head cable connects the control head to the transceiver.

The cable is routed along the motorcycle frame and has weather-resistant connections at both ends. Excess cable is coiled under the transceiver inside the weather-resistant enclosure.

Each end of the cable is strain-relieved with jackscrews at the control head and the transceiver. The cable is shielded to reduce the effects of radio frequency interference and ignition sense noise.

5.1.4
Microphone

A weather-resistant, palm microphone, and coiled cord plug into a pigtail connector on the control cable.

The microphone attaches to a hang-up bracket located within easy reach of the motorcycle rider. The coiled cord is long enough to be operated by someone standing next to the motorcycle, yet short enough to not interfere with the motorcycle steering or operation.

5.1.5
External Speaker

A 3.2-Ohm, 10-watt-rated-audio-power, external speaker is mounted on the front of the motorcycle.

The speaker cable is routed along the motorcycle frame to the transceiver rear accessory connector. A sealed, weather-resistant, speaker-muting (toggle) switch is mounted on top of the speaker.

The external speaker connects to the rear accessory connector of the transceiver.

5.1.6
Headset Capability

The motorcycle radio is compatible with headset accessories that would provide hands-free operation of the radio.

Motorola Solutions does not manufacture headset equipment, but provides the interconnection for headset equipment with the motorcycle radio. Aftermarket headset equipment is available through Motorola Solutions (see Replacement Parts Ordering on page 132).

CAUTION: To avoid loud audio, refer to the CPS help menu for audio settings if the Motorola Solutions mobile radio is used with any motorcycle helmet headset.

5.1.7
Antenna

The antennas are mounted on top of the transceiver weather-resistant enclosure.
The enclosure metal lining acts as the antenna ground plane.

5.1.8
Ignition Sense (ACC) Wire

The ignition sense wire connects to the motorcycle fuse box and is routed along the motorcycle frame to the transceiver rear accessory connector.

The radio is wired so that transmission is inhibited if the motorcycle ignition sense switch is off.
If the PTT switch is pressed with the ignition sense off, a low-frequency tone sounds. The receiver is controlled by the control head on/off switch.

5.2
Installation Overview

All mobile radios are tested and inspected before shipment. It is suggested that the transmitter frequency, deviation, and power output be checked at the time of installation.

It is the license holder's responsibility to ensure that the operating parameters of his station comply with applicable laws governing radio communications equipment. For tests and alignment procedures, refer to the appropriate service manual (refer to Related Publications on page 15).

Generally, the installation of the motorcycle radio takes place in the following parts:

- Mounting the universal mounting plate and related hardware at the rear of the motorcycle.
- Mounting the control head, speaker, microphone, and related hardware forward on the motorcycle.
- Routing the power cable, control-head cable, speaker cable, and ignition sense cable to the weather-resistant enclosure.
- Mounting the weather-resistant enclosure and radio chassis, and connecting the cables.
- Mounting the antennas to the weather-resistant enclosure.

A universal mounting plate, supplied by Motorola Solutions, is first mounted to either a motorcycle carrier at the rear of the motorcycle or to the rear frame of the motorcycle itself. The mounting procedures for the universal mounting plate vary from motorcycle to motorcycle. Therefore, the procedures given in this manual for installing the mounting plate may not specifically apply, but are provided for guidance.

The control head, speaker, and microphone are mounted forward on the motorcycle, on or near the steering column. There are several possible mounting configurations which use a combination of Motorola Solutions and customer-built brackets. These configurations are outlined in this manual. Because of the large number of motorcycle makes and models in existence, the customer-built brackets are necessary to tailor the mounting of the Motorola Solutions equipment to the particular motorcycle being used. Suggestions for customer-built brackets are given in this manual.

The power cable, control-head cable, speaker cable, and ignition sense cable are routed to the weather-resistant enclosure position. The enclosure and the radio chassis are then mounted. Special care is required when connecting cables to the radio equipment within the enclosure.

5.2.1
Important Installation Hints

Consider the following when mounting the radio components:

- Excess lengths of control-head, power, ignition sense, and speaker cables must be routed in the enclosure as shown in Figure 112: Installing Cables on page 117.
- All components must be mounted securely in order to withstand the constant and sometimes severe vibration experienced on a motorcycle.
- No cantilever action, which could cause severe vibration, should be generated in the mounting hardware.
- The control head and microphone must be placed for ease of accessibility by the motorcycle operator.
- Forward components (control head, microphone, and speaker) should not interfere with visual or physical access to controls and instruments.
- Forward components should not interfere with the handling of the motorcycle.
- Cabling between the control head and the radio chassis should be run to minimize interference with operator movements.
- The weather-resistant enclosure should be placed to avoid any interference with the motorcycle operator.
- Electrical continuity must be present through the enclosure shock mounts to the motorcycle frame for proper electrical and RF grounding.
- The antenna is designed for mounting on the top of the weather-resistant enclosure.
- Only the supplied microphone mounting clip should be used to ensure secure mounting of the microphone. This clip has a very strong spring to ensure positive retention of the microphone over rough terrain. Also, there must be electrical continuity from this clip to the motorcycle frame for DC grounding.

- Direct access to the microphone should be provided from both sides of the motorcycle.
- Sufficient slack in the microphone coiled cord should be allowed so as not to impede steering.
- Mounting hardware must be stainless steel to prevent corrosion.
- If an extra length of cable is used to extend the microphone, ensure that the added capacitance does not interfere with the operation of the radio.
- A suitable covering should be applied to the DB-9 receptacle when the water resistant microphone (HMN1079B) is not connected.

5.2.2
Parts Identification

The following installation procedures refer to Figure 100: Universal Mounting Plate Installation (Part of Radio Enclosure Kit) on page 102 through Figure 113: Installing the Transceiver on page 119. Detailed descriptions of the mounting hardware used in each procedure are provided in parts lists section of the *Enhanced Single Band Mobile Radio Basic Service Manual*. . The parts that are supplied by Motorola Solutions are contained in one of the following kits:

- Motorcycle Weather-Resistant Microphone
- Motorcycle Weather-Resistant Speaker with Mute Switch
- Motorcycle Hardware Kit SECURENET or Motorcycle Hardware Kit
- Motorcycle Power Cable Kit
- Motorcycle Mounting Kit
- Weather-Resistant Enclosure (Black)
- Antenna

5.2.3
Order of Installation

Prerequisites:
Before starting the installation, familiarize yourself with the mounting hardware (see Figure 100: Universal Mounting Plate Installation (Part of Radio Enclosure Kit) on page 102 through Figure 113: Installing the Transceiver on page 119). Perform the installation procedures in the order that follows.

Procedure:

1. Install the universal mounting plate on the motorcycle.
2. Install the control head and speaker.
3. Install the microphone hang-up clip.
4. Install antenna base and cable onto enclosure.
5. Install the cables.
6. Install the weather-resistant enclosure on the universal mounting plate.
7. Route the cables inside the weather-resistant enclosure.
8. Install the transceiver in the weather-resistant enclosure.
9. Install the antennas on the enclosure.

5.3

Universal Mounting Plate

The universal mounting plate, supplied with the motorcycle radio, must be mounted on the motorcycle first. It provides the base for the weather-resistant enclosure to be mounted.

The method used for mounting the plate depends on the make and model of the motorcycle and whether the plate is mounted to a carrier or to the motorcycle chassis. After the plate has been securely mounted to the motorcycle, mounting the weather-resistant enclosure onto the plate is straightforward.

Figure 100: Universal Mounting Plate Installation (Part of Radio Enclosure Kit) on page 102 illustrates the universal mounting plate mounted to a motorcycle carrier. Since there are so many makes and models of motorcycles and motorcycle carriers, it is impossible to give specific step-by-step instructions for mounting the universal mounting plate. However, noting the following considerations aids in the installation procedure.

- A minimum of holes are pre-drilled into this plate as supplied. Mounting holes must be drilled as required for the particular motorcycle on which the plate is being mounted.
- The universal mounting plate should be mounted on the motorcycle in such a manner that the later mounting of the weather-resistant enclosure does not interfere with the motorcycle seat back, with any other obstacles, or with the motorcycle operator. The enclosure may be temporarily bolted to the universal mounting plate and the unit positioned on the motorcycle to ensure that the criteria are met.
- To ensure a good grounding path from the universal mounting plate to the motorcycle carrier or frame, stainless steel lock washers must be used with the mounting hardware in two areas to score through the paint on the universal mounting plate and on the carrier or frame. It provides good electrical contact with the underside of the motorcycle carrier or motorcycle frame.

Figure 100: Universal Mounting Plate Installation (Part of Radio Enclosure Kit)

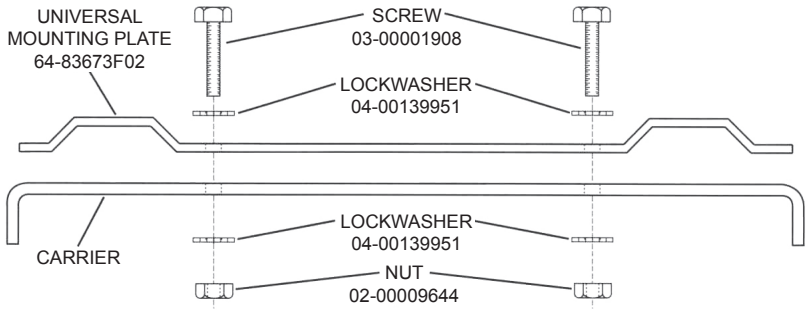

5.3.1

Installing the Universal Mounting Plate

Follow the procedure to mount the universal mounting plate to the motorcycle.

Procedure:

1. Determine the mounting position for the mounting plate.
2. Determine whether stainless steel spacers are required for clearance in mounting the plate.
3. Drill four 9/32-inch holes in the mounting plate and the corresponding motorcycle carrier or chassis for mounting the plate.
4. Attach the universal mounting plate to the motorcycle using four machine screws, eight lock washers, and four nuts. Tighten screws securely. The lock washers must cut through the paint on the plate and motorcycle carrier or frame to ensure a good ground path.

5.4

Speaker and Control Head Installation

NOTICE: To disable the internal speaker of the O2 Control Head, refer to Internal Speaker Disassembly on page 71.

The control head mounting location and configuration is determined largely by the make and model of motorcycle. Two different mounting configurations are described below. One involves mounting the speaker and control head together as a unit using the combination speaker/control-head bracket (shown in Figure 102: Handlebar Installation with Speaker and Control Head Mounted Together on page 104) supplied by Motorola Solutions. Alternately, the control head may be mounted by itself using a smaller control-head bracket supplied by Motorola Solutions. In this case, the speaker is mounted elsewhere. This section outlines installation procedures for each configuration mentioned above. The customer (or installer) is in the best position to determine the most appropriate mounting configuration for the control head and speaker based on the particular motorcycle on which the equipment is to be mounted.

CAUTION: When determining its location, position the control head so that it is clearly visible and within easy reach of the motorcycle operator.

Figure 101: Motorcycle Control Head Cabling (3075217A01)

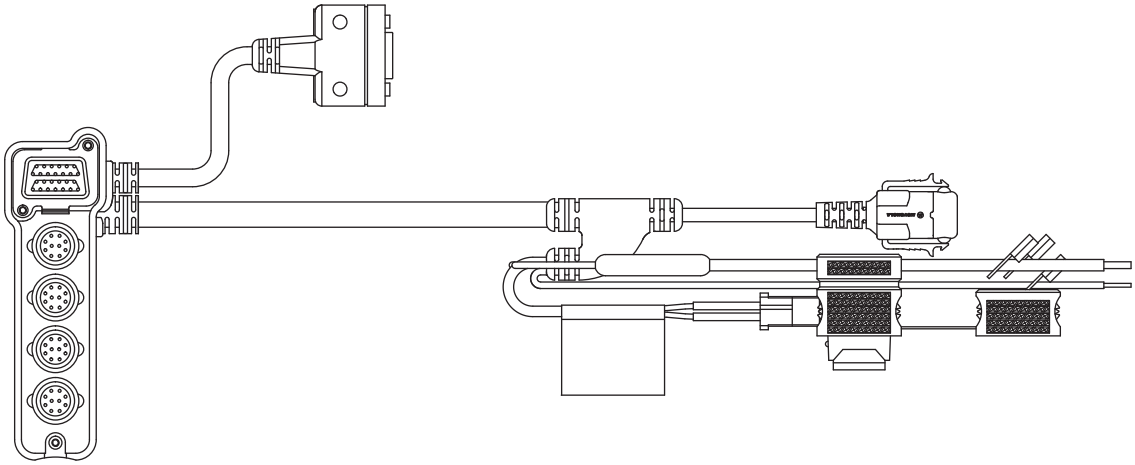

5.4.1

Handlebar Installation with Speaker and Control Head Mounted Together

Figure 102: Handlebar Installation with Speaker and Control Head Mounted Together on page 104 illustrates the combination of speaker/control head bracket. This combination bracket is used only when the control head and speaker are mounted as a unit. Handlebar-mounting bracket which may be required if the combination speaker/control-head bracket cannot be easily mounted to the motorcycle. In this case, the handlebar-mounting bracket is mounted to the motorcycle, and the combination bracket is then mounted to the handlebar-mounting bracket.

Figure 102: Handlebar Installation with Speaker and Control Head Mounted Together

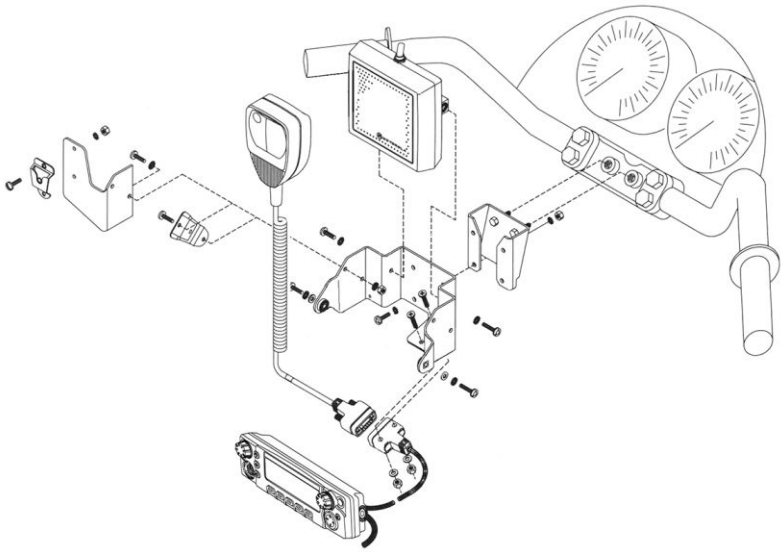

Provision has been made on the combination speaker/control-head bracket for mounting the microphone hang-up clip. If that mounting is desired, the hang-up clip must be attached to the bracket before installing the control head and speaker. See Microphone Hang-Up Clip on page 73 for the hang-up clip procedure.

5.4.1.1
Installing Handlebar with Speaker and Control Head Mounted Together

Follow the procedure to install the speaker and control head.

Procedure:

1. Determine the location to mount the speaker/control head. Consider how the speaker/control-head bracket may be mounted, and whether a handlebar-mounting bracket is needed. Select a location that is not only mechanically convenient, but is located for ease of operation.

   NOTICE: The angle at which the handlebar-mounting bracket or the speaker/control-head bracket is mounted to the motorcycle determines the firing angle of the speaker.

2. If the handlebar-mounting bracket is needed, install it first.
3. Mount the speaker/control-head bracket, either directly to the motorcycle, or, if used, to the handlebar-mounting bracket, using four stainless-steel machine screws, lock washers, and nuts.
4. Mount the 9-pin D-connector end of the motorcycle control-head cable to the speaker/control head bracket, using two machine screws, flat washers, and nuts. (Cable routing directions appear later in this section.)
5. Mount the speaker on the speaker/control-head bracket, using two machine screws and lock washers. Torque these screws to 20 in-lbs.
6. Attach the control-head cable to the control head and tighten the locking screws on the connector. This connection must be made before you mount the control head in the bracket. (Cable routing directions appear later in this section.)
7. Mount the control head to the bracket, using two machine screws, lock washers, and flat washers.
8. Adjust the control head viewing angle by loosening its mounting screws and rotating the control head to the desired angle. Re-tighten the screws to 20 in-lbs torque.

5.4.2

Fuel Tank Console Installation with Speaker and Control Head Mounted Together

Some motorcycles provide a console for mounting radio equipment. This console is attached to the top of the fuel tank. With the use of a mounting bracket, screws, nuts, and lock washers, the combination speaker/control-head bracket can be mounted to this console. Figure 103: Fuel Tank Console Installation with Speaker and Control Head Mounted Together on page 105 illustrates this type of mounting.

The console attachment screws must be removed, and the console must be lifted slightly from the fuel tank to gain access to attach mounting hardware, and to route cables later.

In this installation, the microphone (mic), mic hang-up bracket, and mic extension bracket interfere with handlebar travel.

Installation using this method is the same as in Installing Handlebar with Speaker and Control Head Mounted Together on page 104.

Figure 103: Fuel Tank Console Installation with Speaker and Control Head Mounted Together

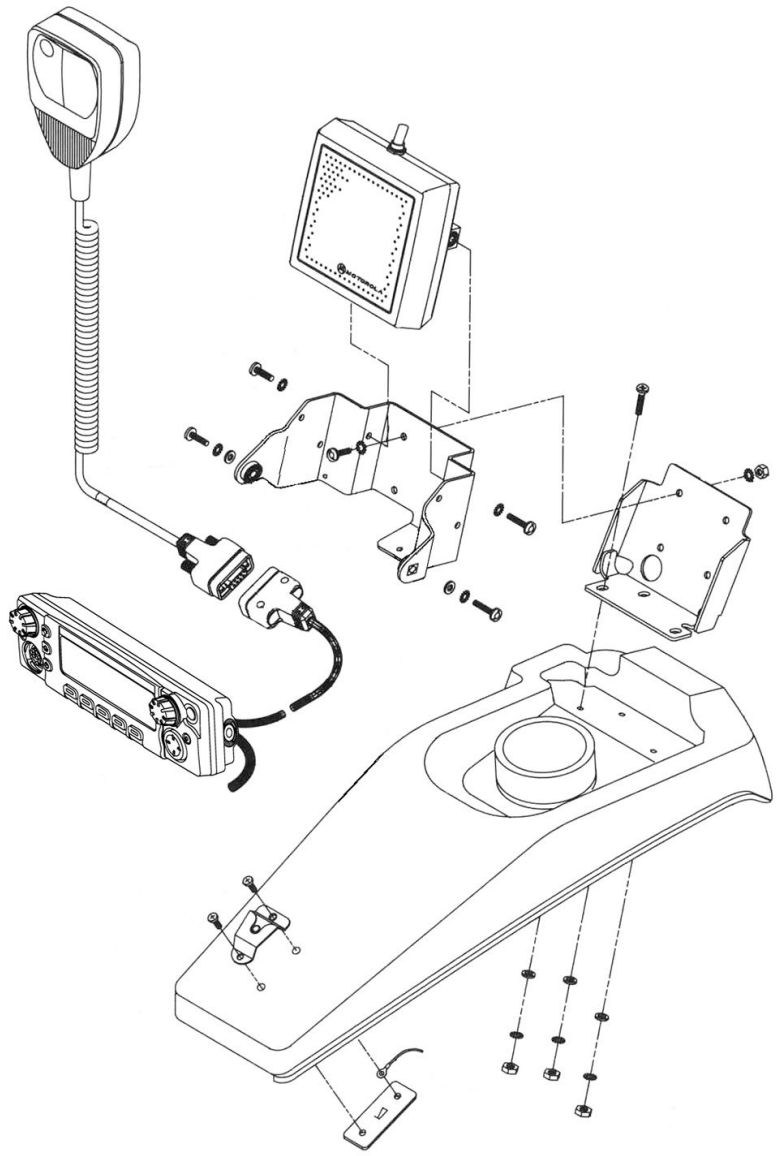

5.4.3

Handlebar Installation with Speaker and Control Head Mounted Separately

It may be necessary to use the smaller control head bracket (part number 0780127N02) and mount the speaker and microphone hang-up clip in another location on the motorcycle.

Temporarily fasten the control-head end of the control-head cable to the control head. Also, fasten the control head to its bracket before installing the control head using the described bracket. Motorola Solutions-supplied spacers and mic-cable bracket are required to mount the control head to the handlebar. This mic-cable bracket has holes to mount the microphone-cable connector.

Figure 104: Handlebar Installation with Speaker and Control Head Mounted Separately

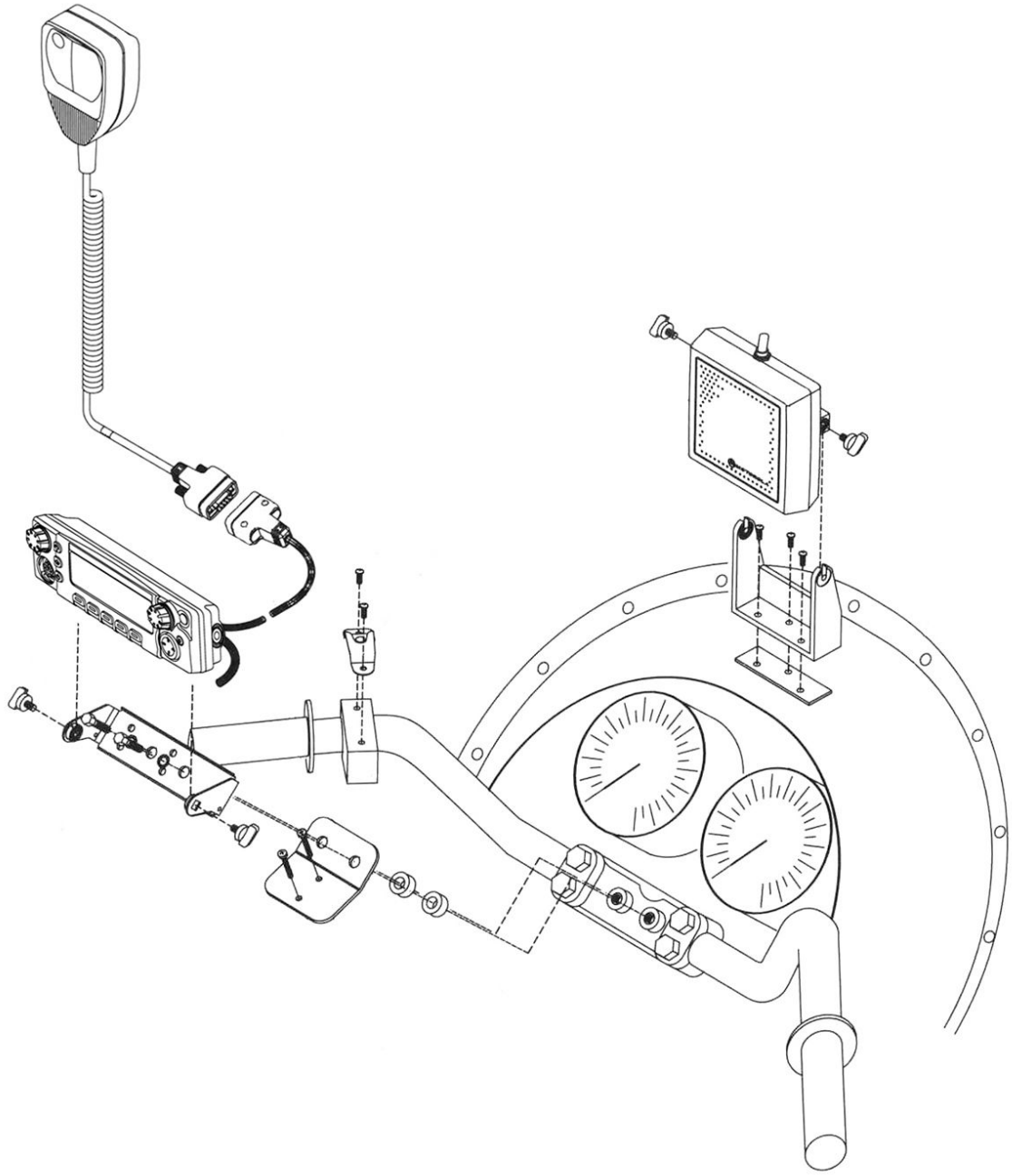

5.4.3.1
Installing Handlebar with Speaker and Control Head Mounted Separately

Follow the procedure when mounting the smaller control-head bracket.

Procedure:

1. Determine the location to mount the control head. Choose a location that is not only mechanically convenient, but is located for ease of operation.
2. Securely mount the Motorola Solutions-supplied spacers, mic-cable bracket, and small control-head bracket to the handlebars.
3. Mount the 9-pin D-connector end of the motorcycle control-head cable to the mic-cable bracket, using two machine screws, flat washers, and nuts. Refer to Cable Routing on page 113 for Cable routing directions.
4. Attach the control-head end of the cable to the control head and tighten the locking screws on the connector.
5. Mount the control head to the small control-head bracket, at the proper viewing angle, using two wing screws and tighten firmly.

5.4.4
Fuel Tank Console Installation with Speaker and Control Head Mounted Separately

The control head may be mounted to the fuel tank console using the smaller control-head bracket and spacers/hardware.

In this configuration, the microphone cable connector may be attached directly to the console, eliminating the need for a custom bracket.

Figure 105: Fuel Tank Console Installation with Speaker and Control Head Mounted Separately

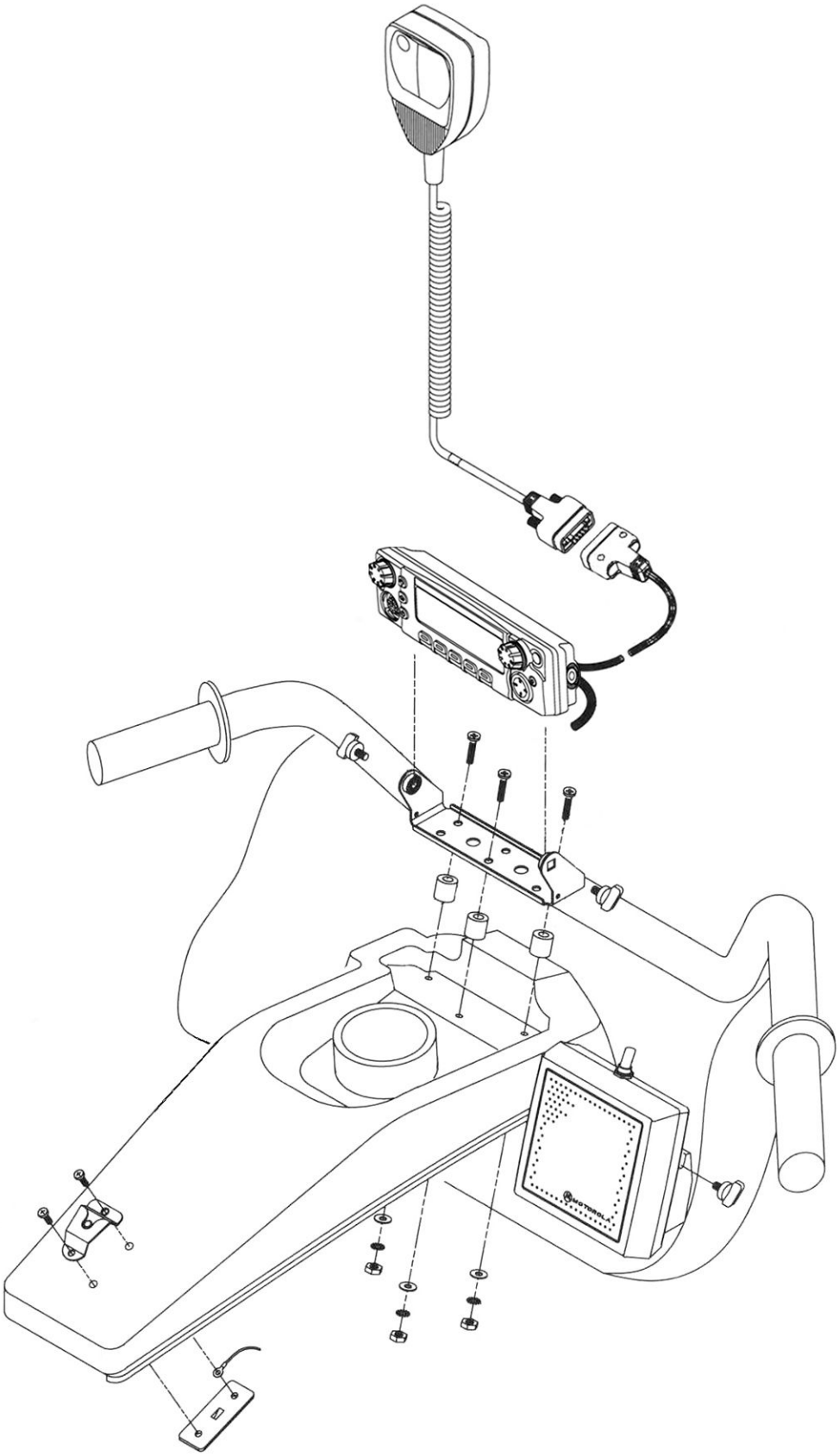

Installation is the same as detailed in Fuel Tank Console Installation with Speaker and Control Head Mounted Together on page 105 and Installing Handlebar with Speaker and Control Head Mounted Separately on page 107.

5.5
Installing the Speaker

Follow the procedure when the speaker is mounted separately from the control head.

When and where to use: The speaker bracket supplied with the speaker may be used alone if a suitable location can be found, or if necessary, a customer-supplied bracket may be fabricated for mounting the speaker.

NOTICE: To disable the internal speaker of the O2 Control Head, please refer to Internal Speaker Disassembly on page 71.

Procedure:

1. Determine the location to mount the speaker and whether there is a requirement for a customer-supplied bracket.
2. Fabricate a bracket if required. Use the Motorola Solutions-supplied speaker bracket as a template for drilling mounting holes. Drill holes in the fabricated bracket for mounting to the motorcycle.
3. Mount the fabricated bracket to the motorcycle chassis.
4. Mount the Motorola Solutions-supplied bracket to the fabricated bracket using two machine screws, flat washers, lock washers, and nuts.
5. Mount the speaker to the speaker bracket using two wing screws. Refer to Cable Routing on page 113 for Cable routing directions.

5.6
Microphone Hang-Up Clip Installation

Install the hang-up clip either on the supplied microphone extension bracket or on the side of the speaker/control head bracket. Both methods are shown in Figure 102: Handlebar Installation with Speaker and Control Head Mounted Together on page 104. Determine the mounting location and install as described in the following paragraphs.

NOTICE: Wherever the hang-up clip is mounted, it must be DC grounded for proper operation. After mounting the clip, be sure there is electrical continuity between the clip and the motorcycle chassis.

5.6.1
Extension Bracket Mounting

Follow the procedure to mount the clip facing the operator.

Procedure:

1. Attach the bracket to the speaker/control-head bracket using two machine screws, four lock washers, and two nuts as shown in Figure 102: Handlebar Installation with Speaker and Control Head Mounted Together on page 104.
2. Torque nuts to 20 in-lbs torque.
3. Fasten the hang-up clip to the extension bracket using two machine screws, lock washers, and nuts as shown in Figure 102: Handlebar Installation with Speaker and Control Head Mounted Together on page 104.

4 Torque nuts to 20 in-lbs torque.

5.6.2
Speaker/Control Head Bracket Side Mounting

Follow the procedure for the speaker/control head bracket side mounting.

Procedure:

1 Attach the hang-up clip to the left side of the speaker/control-head bracket using two machine screws, lock washers, and nuts as shown in Figure 102: Handlebar Installation with Speaker and Control Head Mounted Together on page 104.

2 Torque nuts to 20 in-lbs. torque.

5.6.3
Other Hang-Up Clip Mounting

A customer-supplied bracket may be used to mount the microphone hang-up clip in another location.

When and where to use:
Suggested locations include the handlebars, fuel-tank console, or any location which provides easy access to the microphone without blocking controls and indicators and without interfering with motorcycle handling. See Figure 103: Fuel Tank Console Installation with Speaker and Control Head Mounted Together on page 105, Figure 104: Handlebar Installation with Speaker and Control Head Mounted Separately on page 106, and Figure 105: Fuel Tank Console Installation with Speaker and Control Head Mounted Separately on page 108 for alternative microphone hang-up clip mounting methods.

Procedure:

1 Fabricate a bracket, then secure it to the motorcycle.

2 Use two machine screws, lock washers, and nuts to secure the hang-up clip to the customer-supplied bracket. Ensure that the microphone clip is DC grounded to the motorcycle chassis (a grounding lug and strap are provided in the hang-up clip kit for this purpose) – this is essential for proper radio operation.

5.7
Installing Antenna Base and Cables

Prerequisites:
The GPS antenna assembly must be done after the removal of the metal liner but before reinstalling the radio liner.

Procedure:

1 Open the top cover of the weather-resistant enclosure.

2 Uninstall the metal liner that is shipped attached to the weather-resistant enclosure. This liner has one depressed area at the top of the enclosure liner just toward the rear of the enclosure. This metal liner is not used with Enhanced Single Band Mobile Radio.

3 Place the metal liner with two round, depressed areas toward the enclosure hinge and 5/8-inch hole near the front of the housing, inside the top cover, and align the six slots in the metal liner with the screw holes in the top housing.

4 The metal liner of the enclosure top cover acts as a ground plane for the antenna.

5 Locate the two round, depressed areas about 3 inches in diameter in the metal liner near the enclosure hinge. These areas are either Band 1 or Band 2 depending on the antenna port they

align to. Refer to band markings on radio for the proper antenna port location. For the GPS antenna, use the 5/8-inch hole near the front of the housing near the lock.

Figure 106: Location of Antenna Port

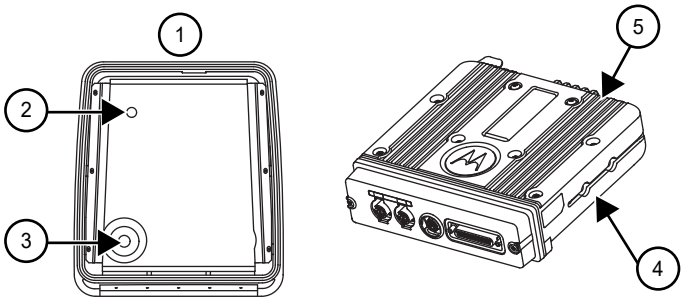

No.	Description
1	Top Cover for Radios
2	GPS/Wi-Fi
3	Antenna
4	Enhanced Single Band Mobile Radio
5	Antenna Port

6 These holes in the metal liner is used as a template to mark the position of the holes to be drilled at the top cover. The following guidelines provide the available options.

- Single Band – Attached your single band antenna in the appropriate antenna position.
- GPS/Wi-Fi – Mark a hole in the GPS/Wi-Fi Antenna position.

Figure 107: Enhanced Single Band Mobile Radio Antenna Band Identification

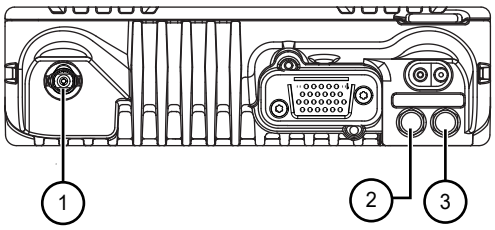

No.	Description
1	Antenna Port
2	GPS Antenna Port
3	Wi-Fi Antenna Port

7 Remove the metal liner from the top cover.

8 For antenna positions, use the Motorola Solutions RPX-4378A Hole-Cutting Saw or equivalent, and carefully drill a 3/4-inch hole at the marked location from the inside of the cover until the saw bottoms out. For the GPS/Wi-Fi, carefully drill a 1 1/16-inch hole at the marked location from the inside of the cover until the saw bottoms out. The saw should have a clean and neat circle to ensure good contact between the antenna and the housing.

IMPORTANT: For proper seating of the antennas, deburr and scrape any foreign matter from both sides of the hole, being careful not to mar the finish of the shell.

9 Clean the mounting surface around the hole to remove dirt and wax.

10 Refer to the *Motorcycle GPS Instruction Manual* for further installation instruction for the GPS. GPS must be mounted before the metal liner is installed.

11 Re-install the metal liner with the cable clamps provided in the weather-resistant housing. If installing GPS, the GPS coaxial cable must be fed through the hole in the metal liner before the liner can be placed onto the housing. Then route the GPS Coaxial Cable through the cable clamps before tightening the hex screws.

CAUTION: Be sure to observe the correct routing of the antenna cable. Failure to do so can damage the cable.

Figure 108: Routing the Coaxial Cable for GPS/Wi-Fi

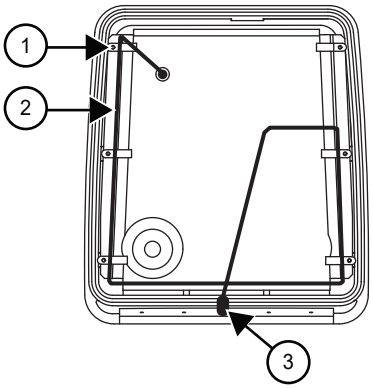

No.	Description
1	Cable Clamp
2	Coaxial Cable
3	Connector

12 To attach the 700/800, VHF, or UHF antenna base, refer to the *Antenna Installation Manual*.

13 Route the coaxial cable for the 700/800, VHF, or UHF antenna through the cable clamps.

Figure 109: Routing the Coaxial Cable for Antenna

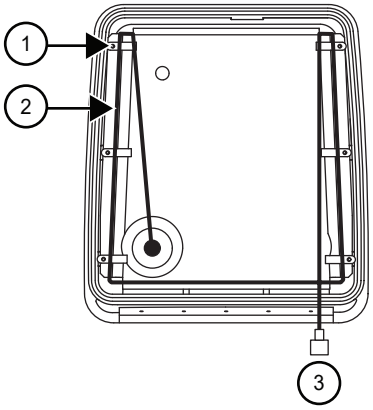

No.	Description
1	Cable Clamp
2	Coaxial Cable
3	Attach to Antenna Connector on Radio

14 After routing the cable, allow enough of the cable to reach the radio antenna connector and cut off any excess length of the cable.

15 To install the connector, refer to the *Antenna Installation Manual*.

5.8 Installing the Antenna

Procedure:

1 Connect the appropriate antenna connectors to the antenna receptacles on the radio. Tighten the coupling until fully engaged.

IMPORTANT: Antenna Placement and Cable Routing as described inside the Antenna Installation Manual is not applicable for the APX radio series.

5.9 Cable Routing

Five cables must be installed to interconnect the components of the radio system as shown in the following figure. The antenna cable is routed away from the other cables inside the enclosure hinged cover (see Installing Antenna Base and Cables on page 110). The four remaining cables, routed along the motorcycle frame, are described in the following paragraphs.

NOTICE: Antenna Hole Placement and Cable Routing information in the *Antenna Installation Manual* is not applicable to the APX series.

Removal of the fuel tank and seat from the motorcycle facilitates routing the cables along the frame. Motorcycles with consoles attached to fuel tanks require routing cables between console and fuel tank. In this case the tank is not removed.

Figure 110: Cable Routing

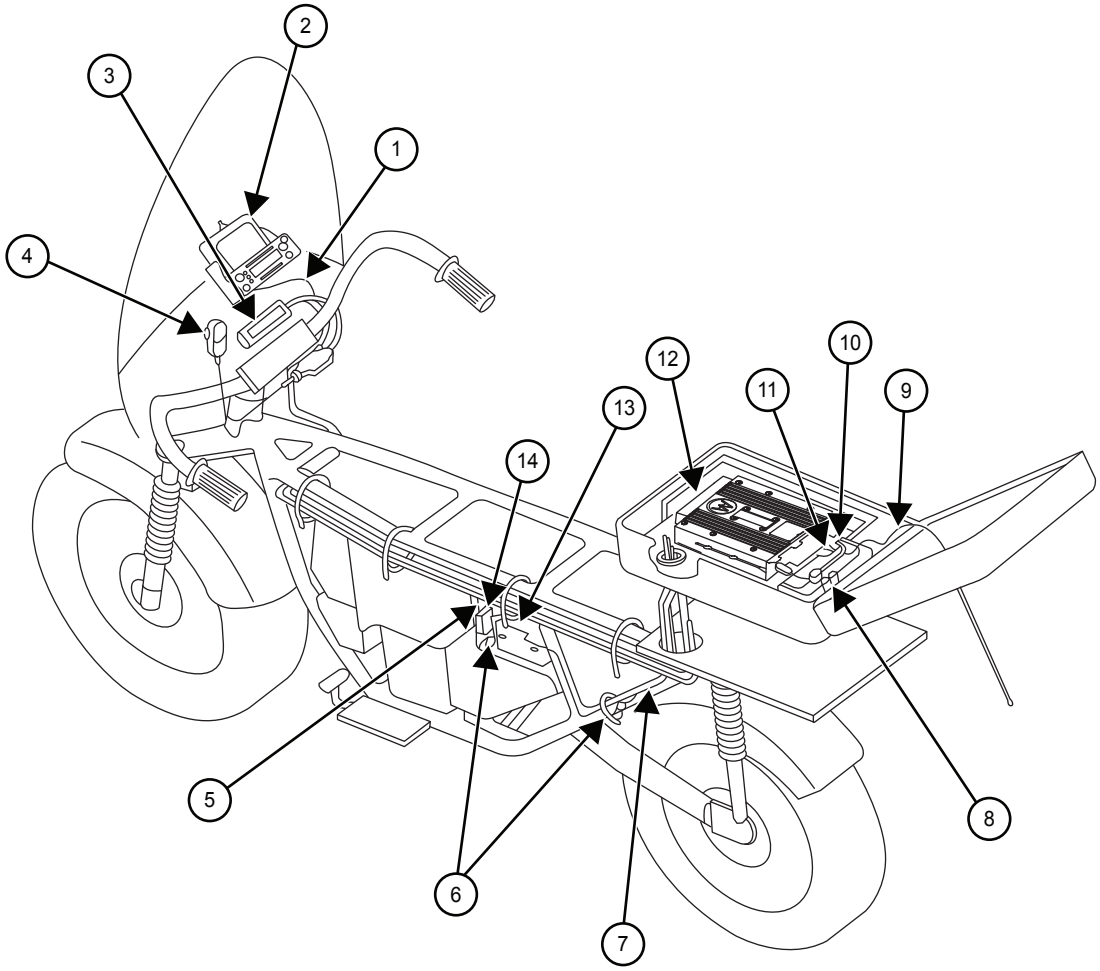

No.	Description
1	Speaker Cable
2	Speaker / Control Head
3	Control Head Cable
4	Microphone
5	Ignition Cable
6	Chassis Ground
7	Fused Power Cable
8	Speaker Cable
9	Antenna Cable
10	Accessory Cable
11	Power Cable
12	Control Head Cable
13	Battery
14	Fuse Block

Speaker Cable
Runs from the speaker to the accessory-cable connector inside the weather-resistant enclosure.

Control Cable
Runs from the rear of the control head to the front of the transceiver inside the enclosure.

Ignition Sense (Red) Wire Portion of Accessory Cable
Runs from the ignition sense fuse terminal of the fuse box to the rear area inside the enclosure. The lug for attaching the ignition sense wire is contained on the accessory cable.

Power Cable
The red, unterminated end runs from the positive terminal of the battery to the power connector that plugs in the rear of the transceiver. Lugs for attaching the red and black leads are contained in the motorcycle power-cable kit. The black, unterminated end runs from a suitable motorcycle chassis ground to the power connector. DO NOT connect the black lead directly to the negative battery post.

You may route the cables in any order. As you route each cable, temporarily fasten it at both ends. When all cables have been run, permanently fasten the cables with appropriate cable tie wraps. Observe the followings during routing and hook-up:

1. Route the cables so that none interfere with motorcycle operation.
2. Fasten the cables with supplied nylon tie wraps. The wraps should be firmly installed at frequent intervals along the cable length in such a manner that motorcycle vibration will not cause metal fatigue and subsequent breakage of the cable wires.
3. Position cables away from parts of the motorcycle that become hot.

Bundle excess cable length inside the weather-resistant enclosure as discussed in Transceiver and Cabling Installation on page 116.

The fifth cable is the microphone with coiled cord. Plug the 9-pin D-connector end of the coiled cord into its mating connector, which is attached near the control head discussed in an earlier paragraph. Tighten the coiled-cord-retention screws. Insert the S-hook strain relief (terminated to the coiled cord) into the hole in the mounting bracket. Slide the microphone into the microphone hang-up bracket.

5.10 Installing the Weather-Resistant Enclosure

Procedure:

1. Remove the radio-mounting plate by removing four screws, lock washers, and flat washers.
2. The weather-resistant enclosure is mounted to the universal mounting plate using shock mounts. Assemble the shock-mount components exactly as shown in Figure 111: Weather-Resistant Enclosure Installation on page 116. Be sure to install ground straps between the shock-mount and the transceiver trunnion mount, and install one 7-1/2-inch ground strap between the right rear mount and the enclosure lid's antenna ground plane 0 (shown in Figure 111: Weather-Resistant Enclosure Installation on page 116 and in Figure 113: Installing the Transceiver on page 119).
3. The order of assembly is important to ensure proper shock mount operation. All components are supplied with the mounting kit. The five 7-1/2-inch straps are used on the rear and front shock mounts–four from shock mount to trunnion, and one from the shock mount to the lid's antenna ground plane.

NOTICE: Grounding through the power-supply cable is NOT sufficient. Whether the radio transceiver is mounted to a carrier or the chassis itself, the transceiver MUST be properly grounded to the motorcycle chassis. The ground strap supplied with the installation kit may have to be used to ensure a good RF ground path from the radio transceiver to the motorcycle chassis.

4 Install the 3-foot ground strap on one of the front shock mounts. Route it through the cable-routing hole and connect the other end to the motorcycle frame (see Figure 111: Weather-Resistant Enclosure Installation on page 116).

WARNING: DO NOT connect the ground strap directly to the negative battery post.

5 The diagram of the shock mount is shown loosely assembled. After the hex screws are tightened, the rubber washers are compressed to fasten the weather-resistant enclosure securely to the universal mounting plate.

6 Figure 113: Installing the Transceiver on page 119 is an exploded view of the enclosure; it shows details that will help to understand how the enclosure is mounted. After the enclosure is completely mounted, check for proper ground connection–continuity between the antenna ground plane and the motorcycle frame.

Figure 111: Weather-Resistant Enclosure Installation

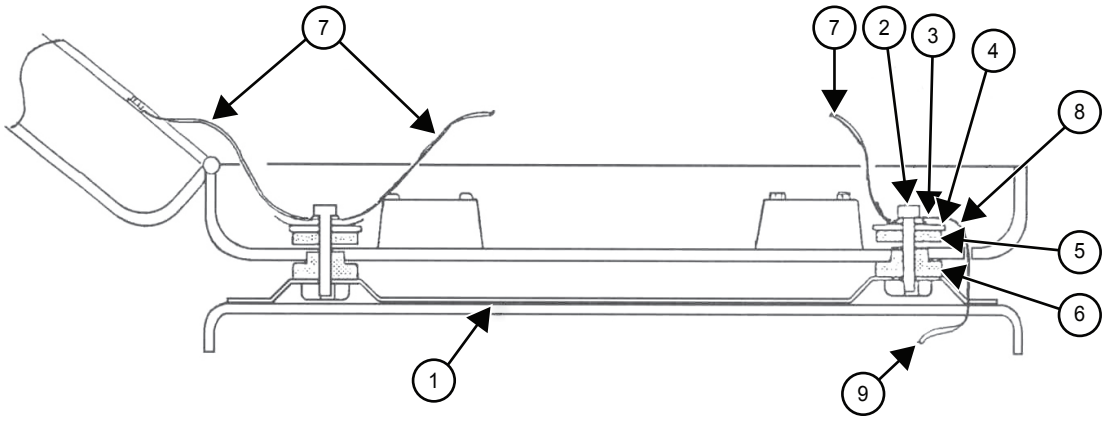

No.	Description
1	Universal Mounting Plate
2	Machine Screw
3	Lockwasher
4	Flat Washer
5	Flat Rubber Washer
6	Shouldered Rubber Washer
7	7-1/2-inch Ground Strap
8	Ground Strap
9	To Motorcycle Chassis Ground

5.11 Transceiver and Cabling Installation

After the weather-resistant enclosure has been installed, the radio chassis (transceiver) is installed in the enclosure and then appropriate cables are connected.

Before the transceiver can be installed, the cabling must be properly positioned in the enclosure.

5.11.1

Installing Cabling in the Enclosure

Follow the procedure to position the cabling in the weather-resistant enclosure.

Procedure:

1. Run the speaker, power, control-head, and ignition sense cables into the enclosure.
2. Lay the excess cable length between the radio mounting bosses in an S configuration as shown in Figure 112: Installing Cables on page 117. Do not coil any excess cable. Use the supplied tie wraps to bundle cable as shown.

   NOTICE: If the extra cable length is not sufficient to match the illustrated cable routing, then match the illustration as closely as possible.

3. Connect the speaker cable to the accessory cable connector.

   NOTICE: The accessory-cable emergency connector is shipped with a shorting plug installed. The headset connector is also shipped with a shorting plug installed. If an emergency switch and/or headset is not used, the plugs must remain in. If an emergency switch and/or headset is used, remove the shorting plug and discard.

4. Install the mounting plate in position on top of the cables installed above. Take care not to damage or pinch the cables when securing the mounting plate in position.

   NOTICE: The control-head cable plug should be at the forward end of the enclosure, and the power-cable, speaker-cable, and accessory-cable plugs should be at the rear of the enclosure.

Figure 112: Installing Cables

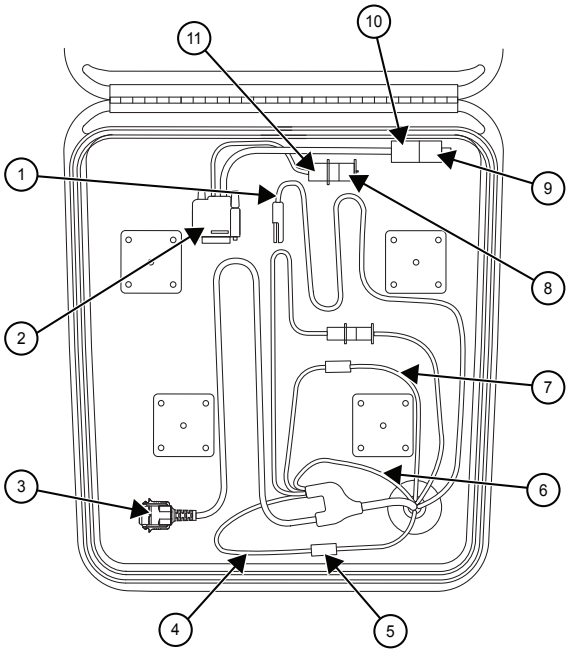

No.	Description
1	Transceiver Power Cable
2	Accessory Cable
3	Control Cable (CAN)

No.	Description
4	Control Head Power (Red)
5	Control Head Power Fuse
6	Control Head Ground (Black)
7	Ignition Sense (ACC)
8	Emergency Cable Shorting Plug
9	Headset Sporting Plug
10	Accessory Cable Headset Connector
11	Accessory Cable Emergency and External Alarm Connector

5.11.2

Installing the Transceiver

Prerequisites:
Install the transceiver in the weather-resistant enclosure as follows (see Figure 113: Installing the Transceiver on page 119).

Procedure:

1. Install the mounting trunnion and loose ends of the four ground straps to the radio-mounting plate, using four screws, flat washers, and external-tooth lock washers (see Figure 113: Installing the Transceiver on page 119). The ground straps must be sandwiched between the flat washers and lock washers. The lock washer must be against the trunnion. The flat washer must be under the screw head.
2. Attach the transceiver to the mounting trunnion and secure with the two screws provided.
3. Connect the control cable to the front of the transceiver. Ensure the control cable connector screws are tightened.
4. Attach the accessory connector to the transceiver. Plug in the power connector.
5. Install the grommet around the cables and push the grommet into the cable-routing hole of the weather-resistant enclosure.

Figure 113: Installing the Transceiver

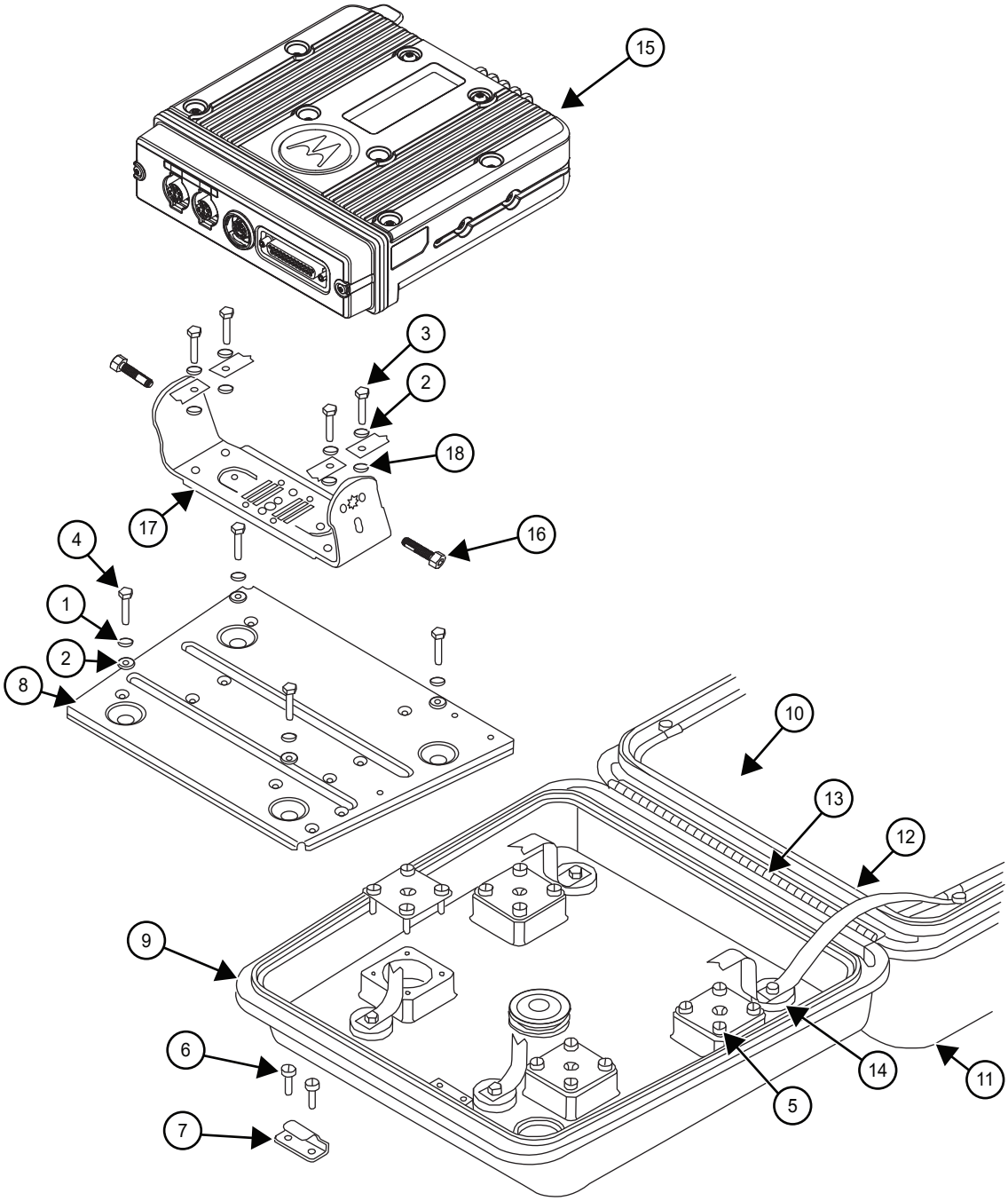

Table 16: Transceiver Installation Parts List

No.	Description
1	Lock washer
2	Flat washer (8 used)
3	Screw

No.	Description
4	Screw
5	Grommet
6	Screw
7	Lock catch
8	Radio mounting plate
9	Bottom housing
10	Ground shield plane
11	Top cover
12	Gasket
13	Hinge
14	Enclosure mounts
15	Transceiver
16	Screw
17	Trunnion
18	External tooth lock washer (8 used)

5.12

Installing the Emergency Switch Option

Use the two-conductor, green/black cable which has one end terminated with two contacts that is supplied with the HLN5131_ Emergency Push Button.

Disconnect the emergency switch shorting plug from the accessory cable. Replace the shorting wire of the shorting plug with the terminated end of the green/black emergency cable. Reconnect the plug to the accessory cable.

5.13

Installing the External Alarm Relay Option

The motorcycle radio is offered with only one optional relay connection. If both horn and lights are required, wire a second relay coil parallel to the first relay. Use the two-conductor green/black cable which has one end terminated with two contacts that is supplied with the W116 Emergency Push Button. Insert the contacts into positions 3 and 4 of the emergency shorting plug of the accessory cable. Refer to Figure 119: Horn/Lights Wiring Diagram on page 123.

5.14

Installing the Headset Accessory

A six-position connector on the accessory cable has been made available for connecting a headset accessory.

Headset manufacturers should be consulted for compatibility with the motorcycle radio prior to purchase and installation of the headset. To install, disconnect the headset shorting plug. Remove the headset shorting wire from the headset shorting plug. Terminate the contacts provided to the applicable wires of the headset cable. Insert the terminated wires into the headset shorting plug per the contact positions illustrated in the typical headset schematic found in this manual. Reconnect the terminated headset shorting plug to the accessory cable.

When upgrading from a mobile radio, the existing headset cable HLN6890 requires these two pins to be swapped. The other motorcycle headset cable with this pin change is 3080010R07.

Figure 114: Motorcycle Wiring Harness Rework

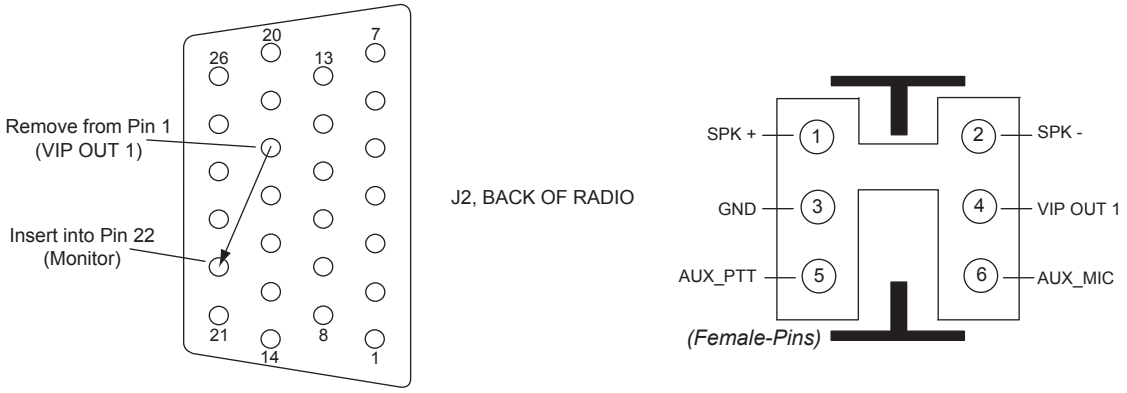

5.15

Installing the O5 and E5 Control Head Sunshield

Follow the procedure to install the sunshield (part number NNTN7279_) to the O5 and E5 control head.

Procedure:

1 Assemble the sunshield to the remote mount trunnion. The same process can be used for the motorcycle trunnion.

Figure 115: Remote Mount Trunnion with Sunshield

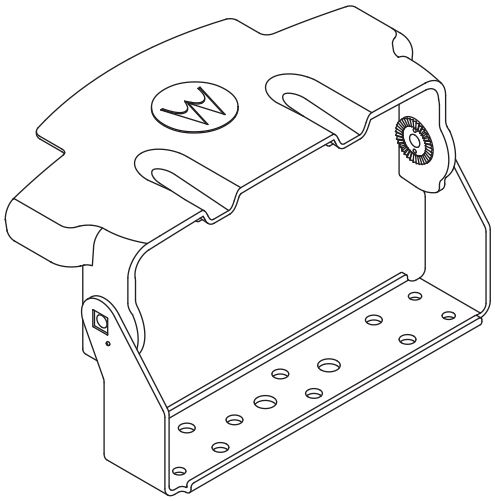

2 Position the sunshield and remove the Velcro adhesive backing.

Figure 116: Position the Sunshield

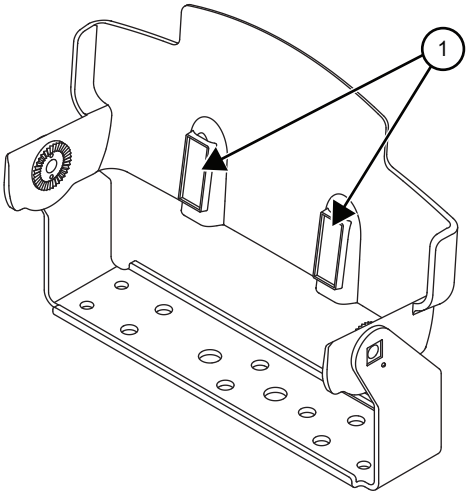

No.	Description
1	Velcro Adhesive Backing

3 Slide the control head onto the trunnion while aligning the edge of the control head with the edge of the sunshield. Make sure the Velcro properly adheres to the control head.

Figure 117: Slide the Control Head onto Trunnion

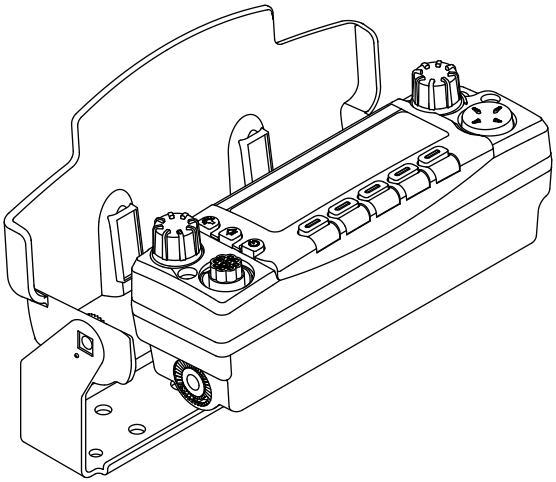

4 Position control head as desired and install screws.

Figure 118: Position Control Head as Desired

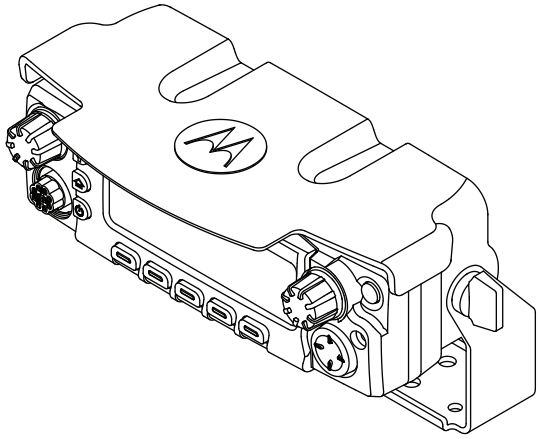

5.16

Horn/Lights Wiring

Figure 119: Horn/Lights Wiring Diagram

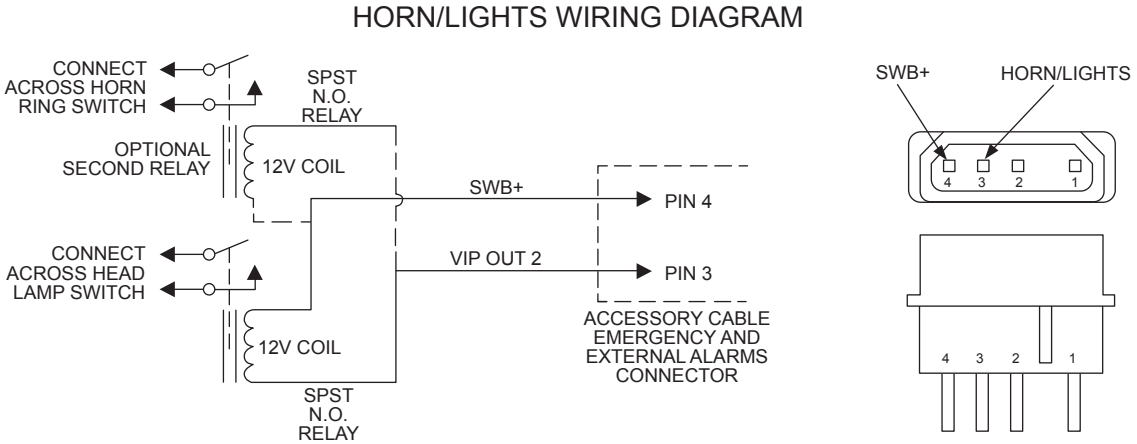

5.17

Emergency Switch Wiring

Figure 120: Emergency Switch Wiring Diagram

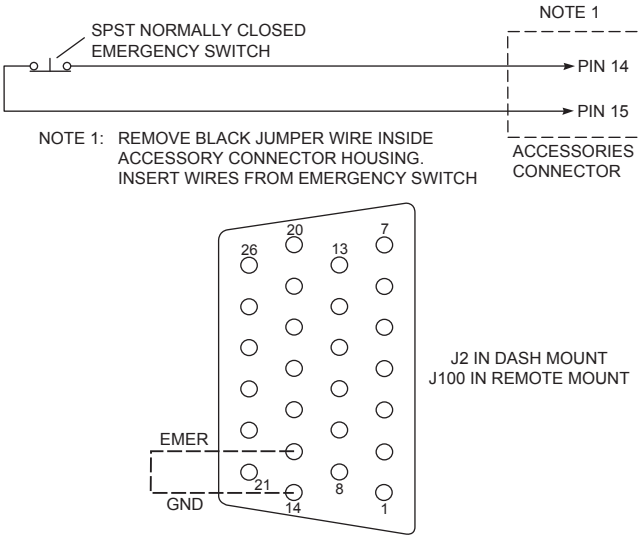

WARNING: Motorcycle products must have pins 1 and 2 connected together to allow the radio to power down. Opening this connection by removing the emergency shorting plug, or pressing the emergency switch, will turn on the radio. Failure to maintain a normally-closed path could drain the vehicle battery if left unchecked.
Emergency-equipped radios are capable of transmitting without warning.

Chapter 6

Finishing the Installation

This chapter provides the cable connection and dust cover installation procedure.

6.1 Cable Connection

The topic provides the procedure for control heads cable connection.

6.1.1 Connecting the Cables for O2 Control Head

Procedure:

1. Remove the control head from its mounting trunnion.
2. Plug the radio CAN cable into the proper location on the back of the control head (see Figure 47: O5 Control Head Installation Exploded View (Also applicable for O2, O7 and E5 Control Heads) on page 53 and Figure 49: O5 Control Head Rear View (Also applicable for O2, O7 and E5 Control Heads) on page 55).

   The connectors “click” when snapped into place. The control head model can have the microphone plugged into the lower left corner of the control head front panel.
3. Connect the plug from the speaker lead to the mating connector that comes out from the power cable.
4. Plug the VIP connector into the correct location an the back of the control head.
5. Connect the CAN cable to the proper location on the radio.

   NOTICE: Connector-protective covers are provided with the radio. They should be used for added environmental robustness.
6. Ensure that the control head and microphone PTT switches are turned off.
7. Install the 15 A fuse in the radio power cable fuseholder and the 3 A or 4 A fuse in the ignition sense cable fuseholder.
8. Turn on the radio at the control head and verify proper operation of all controls and indicators.

   Radio operation in some installations requires turning on the ignition sense.
9. Perform a complete operational check of the radio.
10. Dress the control and power cables out of the way to prevent damage (pull any excess cable into the trunk area), securing the cables with clamps and tie wraps where necessary.

6.1.2 Connecting the Cables for O3 Control Head

Procedure:

1. Unplug the CAN coiled cable connector from the Transceiver Interface.

2 Plug in the connector again.

   You hear a click sound.

3 Ensure that the location of the CAN connector is correct (such as J800L or J800R) on the transceiver interface.

4 Connect the plug from the speaker lead to the mating connector of either J2 or J626 (refer to the cabling diagram for more information).

6.1.3
Connecting the Cables for O5, E5 and O7 Control Heads

Procedure:

1 Remove the control head from its mounting trunnion.

2 Plug the radio CAN cable into the proper location on the back of the control head (see Figure 47: O5 Control Head Installation Exploded View (Also applicable for O2, O7 and E5 Control Heads) on page 53 and Figure 49: O5 Control Head Rear View (Also applicable for O2, O7 and E5 Control Heads) on page 55).

   The connectors “click” when snapped into place. The control head model can have the microphone plugged into the lower left corner of the control head front panel.

3 Connect the plug from the speaker lead to the mating connector that comes out from the power cable.

4 Plug the VIP connector into the correct location at the back of the control head.

5 Connect the CAN cable to the proper location on the radio.

6.1.4
Connecting the Cables for O9 Control Head

Perform the following if it has not been previously done:

Procedure:

1 Remove the control head from its mounting trunnion.

2 Plug the radio CAN cable into the proper location on the back of the control head (see Figure 48: O9 Control Head Installation Exploded View on page 54 and Figure 50: O9 Control Head Rear View on page 55).

   The connectors “click” when snapped into place. The control head model can have the microphone plugged into the GCAI connection on the control head back panel.

3 Connect the plug from the speaker lead to the mating connector that comes out from the power cable.

4 Plug the VIP connector into the correct location at the back of the control head.

5 Connect the CAN cable to the proper location on the radio.

6.2
Dust Cover Installation

To help protect and ensure that debris does not affect or damage your unused connectors, use the provided dust covers.

Refer to the following figure to determine the correct cover for your connector.

Figure 121: Dust Cover Installation Locations

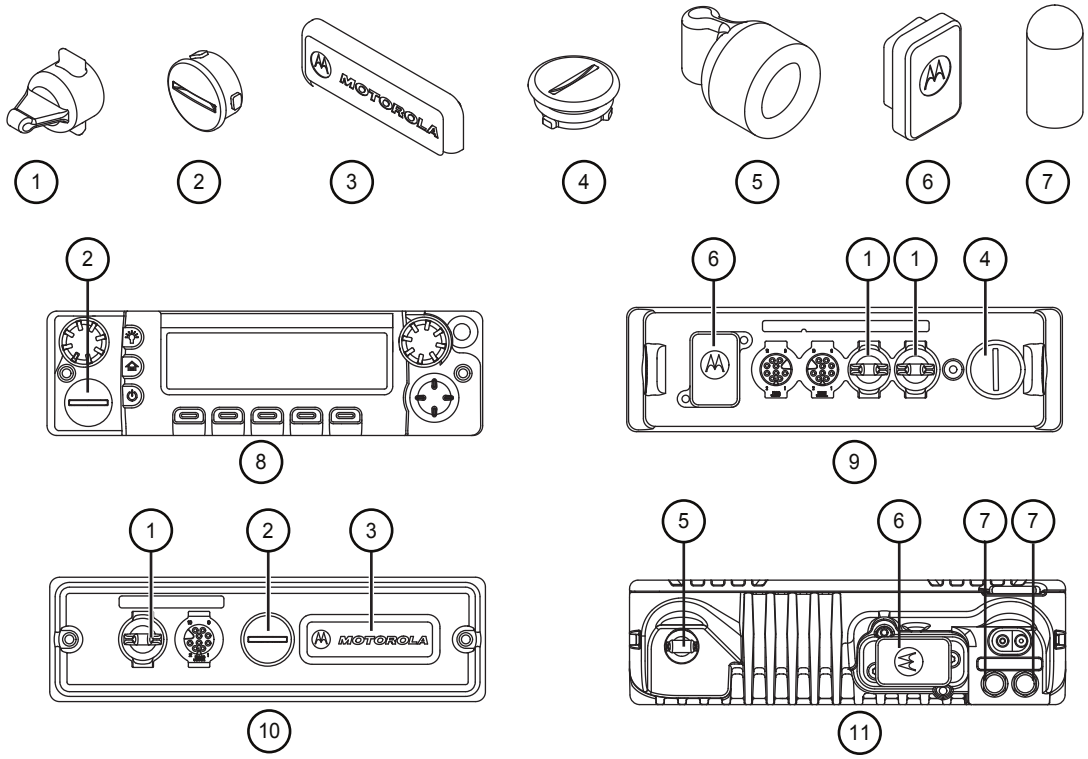

No.	Description
1	1515047C01
2	1515048C01
3	1515049C01
4	1515327H02
5	1575693A01
6	7575262A01
7	SL000319A01
8	Control Head
9	Control Head (Rear)
10	Mid Power Tanapa (Remote Front)
11	Enhanced Single Band Mobile Radio Mid Power Tanapa

NOTICE:
Using a coin as a tool, parts 2 and 4 require you to insert then turn the coin approximately 1/3 turn until snug.

Install parts 3 and/or 6 onto DB25 accessory cable assembly when the corresponding cable assembly connections are not in use.

6.3

Miscellaneous Information

On the mid power radio, there are rubber port plugs which seals an opening that is used for future antenna connection.

On the mid power radio, the port plug is at the bottom of the radio behind the control head or TIB. These plugs are critical to the sealing of the radio and should not be removed unless to replace it due to damage or to install the future antenna connector. Removal of the port plug in any other situation creates a leak path into the radio.

Chapter 7

Best Practices: Installation and Troubleshooting

This chapter covers the Motorola Solutions recommended vehicle installation practices that can address or prevent many issues.

- Radio circuit damage due to overvoltage condition.
- Radio/Accessories "lock-up".
- Radio/Accessories change state/lock-up when radio PTT is depressed.
- Radio powers up in the FL 01/90 state (general communication error code).
- Radio intermittently resets.
- Radio loses secure key.
- Transmit audio distortion on motorcycle radio when engine is running.
- Keypad buttons become inoperative for motorcycle radios when engine is running.
- Alternator whines when transmitting with engine running.
- Radio/Accessories turn themselves on/off.

7.1 Checking the Wiring of Ignition and Radio Ignition Sensing

- If it is required to turn the radio on and off using the ignition sense switch, in addition to the control head on/off switch, connect the ignition sense lead to the accessory terminal from the ignition switch (usually in the vehicle fuse panel under accessory or radio).

  NOTICE: Motorola Solutions recommends protecting or isolating the radio ignition sense input from voltage spikes more than +/- 40 VDC. Such spikes can be hundreds of volts in amplitude and are common in larger vehicles (for example utility trucks and buses), especially when the source is common to a solenoid coil. A triggerable oscilloscope is required to determine the existence of such spikes as most voltmeters cannot measure in short duration (< 1 ms). If the condition of the intended ignition sense source is unknown, Motorola Solutions recommends isolating the source from the radio with a relay or the use of a suppression diode wired between the source and ground. Any high current suppression diode (MR2535) with a breakdown voltage of between 18 V and 40 V would suffice. A suitable diode kit is available from Motorola Solutions parts, kit number HLN6325_.

- If it is required to have the radio power up only using the control head on/off switch, then connect the ignition sense lead directly to the positive terminal of the battery. The ignition sense will always be ignored and a re-wiring is necessary in the future if the operator chooses any ignition sense CPS setting.

7.2

Checking the Physical Installation of Radio Ground and Radio Accessory Wiring

Dash and Remote Mount Configurations

- Scrape away paint on the chassis at the place where you are making the ground connection, and try to keep the ground lead as short as possible.
- Verify that the red A+ lead is connected directly to the positive terminal of the battery and the black ground lead is connected to the vehicle chassis using a wire with practical length.
- Ensure that the mobile radio antenna is the minimum required distance (three feet) from the mobile radio equipment to prevent radio frequency interference (RFI).
- For vehicles that have other types of electronic equipment installed such as lights, flashers, computers, siren/PA, and others, use a separate ground for the mobile radio equipment.
- Do not coil up any excess length of the red A+ lead. Doing this may produce a large transient voltage when there is a high current drain for example, during transmit. This could cause the radio to reset when the push-to-talk (PTT) is depressed.

Motorcycle Configuration

- Ensure that the antenna ground connection is solid. An intermittent ground connection can distort the transmission when the motorcycle engine is running.
- Do not coil up any excessive length of antenna cable. It may affect the receive performance of the radio.
- If an extra length of cable is used to extend the microphone, ensure that the added capacitance does not interfere with the operation of the radio.

7.3

Improving the Electrical Quality of the Power and Ignition Lines

- Use a relay to isolate the vehicle ignition switch point (ACC) from the radio ignition sense point. Control this relay from the vehicle ignition switch point (ACC). Supply a cleaner voltage from the positive terminal of the battery into the relay, which will now be attached to the radio ignition sense point. Now the ACC line toggles the relay, instead of directly toggling the radios ignition sense line.
- Install a Power Line Filter between the A+ lead and the positive terminal of the battery. The Power Line Filter filters the battery power applied to the transmitter power amplifiers. Pay extra caution to this because the series filter introduces a negative spike when the radio transmits that may cause problems with radio operation. Lock-up issues have been seen with the dual control head MCS 2000 configuration.
- For vehicles that use electromechanical relays to control external devices (lights, motors, switch boxes, and others), isolate these relay circuits as best as possible from the mobile radio equipment. Also, use diode suppression across the relay coil to minimize the noise produced by the collapsing magnetic field.
- If the ignition sense switch is used, ensure that there is not a large voltage drop between the A+ point (usually the positive terminal of the battery) and the ignition sense point. In general, the voltage difference between these two points, should not be greater than 1.5 V when all accessories/ air-conditioner are turned on. Refer to the *Basic Service Manual* for specifications for minimum and maximum voltage levels. Typical battery voltage levels are 13.6 V +/- 20%.

7.4

Minimizing the Effect of Poorly Grounded Antennas

For vehicles with high power radios that use glass mount antennas, keep the radio and antenna cable as far as possible from the radiating element of the antenna. If a sufficient distance is not maintained, the lack of a proper ground plane from the glass mount antenna may cause the radio transmit signal to interfere with itself and cause a reset. To minimize this effect, it may be necessary to install ferrite beads on the antenna cable to protect the radio from this interference.

7.5

Jump-Starting the Vehicle

Prerequisites:

CAUTION: Do not jump-start vehicles with radio power or ignition sense cables connected. Damage to the radio and/or accessories may result.

Jump-starting a vehicle can crank 300+ volts through the vehicle charging system and these transients can damage electrical equipment.

The state of your radio before it needs a jump-start may be unknown, and the radio may attempt to return to its last state (radio ON), when doing a jump-start. Therefore, carry out the following procedure before jump-starting any vehicle containing a radio.

Procedure:

1. Locate the ignition sense line (thin yellow wire or thin red wire, depending on dash mount or remote mount installation) and the main power leads (thick red wire) near the battery positive terminal.

   NOTICE:
   These lines are fused. In the event these lines are not fused (add the appropriate fuse in line), use whatever tools necessary to physically disconnect the ignition sense and power lines from the battery terminal.

   Ensure that the disconnected lines are not in the way of moving motorcycle parts or interfering with the motorcycle operation in any way.

2. Open up the fuse holders and remove the fuses out of the kits.
3. Re-tighten the fuse holders but without the fuses to ensure that ignition sense and power lines do not interfere with moving motorcycle parts.
4. Proceed with the jump-start routine as described in the manual of your vehicle.
5. Once the jump-start process is complete, re-install the fuses into their holders.

7.6

Eliminating Noise/Howling from PA Speaker

- Refer to Installation Examples on page 32 for the recommended methods of installation available for the mobile two-way radio, with accessories placed to the vehicle as desired.
- Refer to Figure 38: Radio Installation of O9 Remote Mount with Transceiver (URC is optional) on page 39 and Figure 39: Radio Installation (O9 Remote Mount with Pinouts) on page 40 for the wiring diagrams for the recommended configurations.
- Refer to the *Siren/PA User Manual* for further details on lowering the wattage.

Appendix A

Replacement Parts Ordering

Basic Ordering Information

Some replacement parts, spare parts, and/or product information can be ordered directly from the Motorola Solutions local distribution organization or through Motorola Online. While parts may be assigned with a Motorola Solutions part number, this does not guarantee that they are available from Motorola Solutions Radio Products and Solutions Organization (RPSO). Some parts may have become obsolete and are no longer available in the market due to cancellations by the supplier. If no Motorola Solutions part number is assigned, the part is normally not available from Motorola Solutions, or is not a user-serviceable part. Part numbers appended with an asterisk are serviceable by Motorola Solutions Depot only.

Place orders for replacement parts, kits, and assemblies directly on Motorola Solutions local distribution organization or through Motorola Online. When ordering replacement parts or equipment information, include the complete identification number. This applies to all components, kits, and chassis. If the component part number is not known, the order should include the number of the chassis or kit of which it is a part of, and sufficient description of the desired component to identify it.

To identify non-referenced spare parts, request for help from the Customer Care organization of a Motorola Solutions local area representative.

Motorola Online

The product catalog is available on the Motorola Online website. To register for login access:

- For U.S. and Canada Service Centers only, call 1-800-422-4210.
- For APAC and ANZ regions, sign up at https://asiaonline.mot-solutions.com.
- For LACR region, sign up at https://businessonline.motorolasolutions.com.

Types of Orders	Contact Information
Mail Orders	Mail orders are only accepted by the U.S. Federal Government Markets Division (USFGMD). Motorola Solutions 7031 Columbia Gateway Drive 3rd Floor - Order Processing Columbia, MD 21046 U.S.A.
Telephone Orders and Parts Identification	RPSO (United States and Canada) 7:00 AM to 7:00 PM (Central Standard Time) Monday through Friday (Chicago, U.S.A.) 1-800-422-4210 1-847-538-8023 (United States and Canada) USFGMD 1-800-826-1913 Federal Government Parts - Credit Cards Only

Types of Orders	Contact Information
	8:30 AM to 5:00 PM (Eastern Standard Time)
Fax Orders	RPSO (United States and Canada) 1-800-622-6210 1-847-576-3023 (United States and Canada) USFGMD (Federal Government Orders) 1-800-526-8641 (For Parts and Equipment Purchase Orders)

Product Customer Service

RPSO (United States and Canada)

1-800-927-2744

NOTICE: The Motorola Solutions RPSO was formerly known as the Radio Products Services Division (RPSD) and/or the Accessories and Aftermarket Division (AAD).

A.1
Service Information

EMEA Technical Support Operations (TSO)

The EMEA Technical Support Operations (TSO) provides a remote Technical Support Service to help customers resolve technical issues and quickly restore networks and systems. This team of highly skilled professionals is available to customers with current service agreements in place that include the Technical Support Service. The TSO technical experts may be accessed through the Service Desk either electronically or using the listed telephone numbers. If you are unsure whether your current service agreement entitles you to benefit from this service, or if you would like more information about the Technical Support Service, contact your local customer support or account manager for further information.

Contact Details

Technical Requests: techsupport.emea@motorolasolutions.com

Repair Support: repair.emea@motorolasolutions.com

Contact Us: https://www.motorolasolutions.com/en_xu/support.html

Parts Identification and Ordering

If you need help in identifying non-referenced spare parts, direct a request to the Customer Care Organization of a local area Motorola Solutions representative. Orders for replacement parts, kits, and assemblies should be placed directly at the local distribution organization of Motorola Solutions or through the Extranet site Motorola Online at https://emeaonline.motorolasolutions.com.

However, you cannot order export-controlled products or spare parts such as TEA-related boards through Motorola Online. Send an order form with actual end-customer details by e-mail to your customer care team.

Your Input

Send questions and comments regarding user documentation to documentation@motorolasolutions.com.

A.2

Service Information – APAC

This topic contains contact details to service centers in Asia and Pacific region.

Technical Support

Technical support is available to assist the dealer/distributor in resolving any malfunction which may be encountered. Initial contact should be by telephone wherever possible. When contacting Motorola Solutions Technical Support, be prepared to provide the product model number and the serial number.

Further Assistance from Motorola Solutions

You can also contact the Customer Help Desk through the website: http://www.motorolasolutions.com/en_xp/products. If a unit requires further complete testing, knowledge and/or details of component level troubleshooting or service than is customarily performed at the basic level, send the radio to a Motorola Solutions Service Center as listed in the following table:

Table 17: Service Information – Telephone Numbers and Addresses of the Asia and Pacific Motorola Solutions Centers

Country	Telephone Number	Address
Singapore	+65-6352-6383	**Motorola Solutions Singapore Pte. Ltd,** c/o Azure Engineering, 49 Jalan Pemimpin, #03-11 APS Industrial Building, Singapore 577203 Contact: Mareen Phua E-mail: mareen@azure.com.sg Enquiry: Goe Engkiet E-mail: eng-kiet.goe@motorolasolutions.com
Malaysia	+603-7809-0000	**Motorola Solutions Sdn. Bhd.** Level 14, Persoft Tower, No. 68, Pesiaran Tropicana, 47410 Petaling Jaya, Selangor Darul Ehsan, Malaysia Contact: Koh Tiong Eng E-mail: A21001@motorolasolutions.com
Indonesia	+62-21-3043-5239	**PT. Motorola Solutions Indonesia** 30th Floor, Gedung BRI II, Suite 3001, Jl. Jend. Sudirman Kav. 44-46, Jakarta 10210, Indonesia Contact: Eko Haryanto E-mail: Eko.Haryanto@motorolasolutions.com
Thailand	Tel: +662-653-220 Fax: +668-254-5922	**Motorola Solutions (Thailand) Ltd.** 142 Two Pacific Place Suite 2201, 3220 Sukhumvit Road, Klongtoey,

Country	Telephone Number	Address
		Bangkok 10110 Contact: Nitas Vatanasupapon E-mail: Nitas@motorolasolutions.com
India	+91-9844218850	**Motorola Solutions India Pvt. Ltd.** C/o Communication Test Design India Private Limited, #4, 5 Maruthi Industrial Estate, Rajapalya, Hoodi Village, Bangalore - 560048, India Contact: K. Umamaheswari E-mail: umamaheshwari@motorolasolutions.com
China	+86-10-8473-5128	**Motorola Solutions (China) Co. Ltd.** No. 1 Wang Jing East Road, Chao Yang District, Beijing, 100102, P.R. China Contact: Sophy Wang E-mail: C18170@motorolasolutions.com
Hong Kong	852-2966-4823	**Motorola Solutions Asia Pacific Ltd.** Unit 1807-1812, 18/F, Two Harbourfront, 22 Tak Fung Street, Hunghom, Kowloon, Hong Kong Contact: Judy Leung E-mail: Judy.Leung@motorolasolutions.com
Philippines	Tel: +632 858-7500 Fax: +632 841-0681	**Motorola Communications Philippines, Inc.** Unit 2102, One Global Place Building, 5th Ave., Bonifacio Global City, Taguig, Philippines 1634. Contact: Arthur Nieves E-mail: Arthur.Nieves@motorolasolutions.com
Korea	+822-3497-3649	**Motorola Solutions Korea, Inc.** 9th Floor, Hibrand Building, 215, Yangjae-Dong, Seocho-Gu, Seoul, 137-924, Korea. Contact: KS Kwak E-mail: r45321@motorolasolutions.com
Taiwan	+886-2-8729 8000	**Motorola Solutions Taiwan, Ltd.** 8F, No. 9, Songgao Rd., Taipei 110, Taiwan (R.O.C.) Contact: Michael Chou E-mail: ftpe239@motorolasolutions.com

Country	Telephone Number	Address
Australia	+613-9847-7725	**Motorola Solutions Australia Pty. Ltd.** 10 Wesley Court, Tally Ho Business Park, East Burwood Victoria 3151, Australia. E-mail: servicecentre.au@motorolasolutions.com

Piece Parts

Some replacement parts, spare parts, and/or product information can be ordered directly. If a complete Motorola Solutions part number is assigned to the part, it is available from Motorola Solutions Service Organization. If no part number is assigned, the part is not normally available from Motorola Solutions. If a list of parts is not included, that means that no user-serviceable parts are available for that kit or assembly.

Customer Programming Software has no capability to tune the radio. Tuning the radio can only be performed at the factory or at the appropriate Motorola Solutions Repair Center. Component replacement can affect the radio tuning and must only be performed by the appropriate Motorola Solutions Repair Center.

All orders for parts/information should include the complete Motorola Solutions identification number. All part orders should be directed to your local Motorola Solutions Service Organization. See your latest price pages.

Parts Identification and Ordering

Request for help in identification of non-referenced spare parts should be directed to the Customer Care Organization of Motorola Solutions local area representation. Orders for replacement parts, kits, and assemblies should be placed directly on a Motorola Solutions local distribution organization or from the Motorola Solutions Online (Extranet).

Glossary

This glossary contains an alphabetical listing of terms and their definitions that are applicable to portable and mobile subscriber radio products.

Analog
Refers to a continuously variable signal or a circuit or device designed to handle such signals.

band
Frequencies allowed for a specific purpose.

Customer Programming Software
CPS-Software with a graphical user interface containing the feature set of an ASTRO radio.

default
A pre-defined set of parameters.

DEK
Direct Entry Keyboard

digital
Refers to data that is stored or transmitted as a sequence of discrete symbols from a finite set; most commonly this means binary data represented using electronic or electromagnetic signals.

EEPROM
Electrically Erasable Programmable Read-Only Memory

Electrically Erasable Programmable Read-Only Memory
EEPROM- A special type of PROM that can be erased by exposing it to an electrical charge. An EEPROM retains its contents even when the power is turned off.

FCC
Federal Communications Commission.

Firmware
Code executed by an embedded processor such as the Host or DSP in a subscriber radio. This type of code is typically resident in non-volatile memory and as such is more difficult to change than code executed from RAM.

frequency
Number of times a complete electromagnetic-wave cycle occurs in a fixed unit of time (usually one second).

Kilohertz (kHz)
One thousand cycles per second. Used especially as a radio-frequency unit.

Megahertz (MHz)
One million cycles per second. Used especially as a radio-frequency unit.

Megahertz
One million cycles per second. Used especially as a radio-frequency unit.

Microcontroller Unit
MCU-Also written as µC. A microprocessor that contains RAM and ROM components, as well as communications and programming components and peripherals.

PA
Power amplifier.

paging
One-way communication that alerts the receiver to retrieve a message.

Push-to-Talk
PTT-The switch or button usually located on the left side of the radio which, when pressed, causes the radio to transmit. When the PTT is released, the unit returns to receive operation.

Radio Frequency
RF-The portion of the electromagnetic spectrum between audio sound and infrared light (approximately 10 kHz to 10 GHz).

RAM
Random Access Memory

Random Access Memory
RAM-A type of computer memory that can be accessed randomly; that is, any byte of memory can be accessed without touching the preceding bytes.

receiver
Electronic device that amplifies RF signals. A receiver separates the audio signal from the RF carrier, amplifies it, and converts it back to the original sound waves.

Registers Short-term data-storage circuits within the microcontroller unit or programmable logic IC.

RESET
Reset line: an input to the microcontroller that restarts execution.

RX
Receive

signal
An electrically transmitted electromagnetic wave.

software

Computer programs, procedures, rules, documentation, and data pertaining to the operation of a system.

Time-out Timer
TOT-A timer that limits the length of a transmission.

transceiver
Transmitter-receiver. A device that both transmits and receives analog or digital signals. Also abbreviated as XCVR.

transmitter
Electronic equipment that generates and amplifies an RF carrier signal, modulates the signal, and then radiates it into space.

TX
Transmit.

UHF
Ultra-High Frequency.

Universal Serial Bus
USB-An external bus standard that supports data transfer rates of 480 Mbps.

VHF
Very-High Frequency.