Canon

PIXMA iP5200R

Photo Printer

Quick Start Guide

Canon PIXMA iP5200R Photo Printer Quick Start Guide.

Copyright

This manual is copyrighted by Canon U.S.A., Inc. with all rights reserved. Under the copyright laws, this manual may not be reproduced in any form, in whole or in part, without the prior written consent of Canon U.S.A., Inc.

© 2005 Canon U.S.A., Inc.

Disclaimer

Canon U.S.A., Inc. has reviewed this manual thoroughly in order that it will be an easy-to-use guide to your Canon PIXMA iP5200R Photo Printer. All statements, technical information and recommendations in this manual and in any guides or related documents are believed reliable, but the accuracy and completeness thereof are not guaranteed or warranted, and they are not intended to be, nor should they be understood to be, representation or warranties concerning the products described.

Specifications are subject to change without notice.

As an ENERGY STAR partner, Canon U.S.A., Inc., has determined that this product meets the ENERGY STAR guidelines for energy efficiency.

All information regarding non-Canon products was compiled from publicly available information. No representation is made regarding the accuracy thereof.

Trademarks

- “Windows” and “Internet Explorer” are trademarks of Microsoft Corporation, registered in the United States and other countries.
- “Macintosh” and “Mac” are trademarks of Apple Computer, Inc., registered in the U.S. and other countries.
- “Wi-Fi” is a registered trademark of the Wi-Fi Alliance. The “Wi-Fi CERTIFIED” logo is a certification mark of the Wi-Fi Alliance.

Canon U.S.A., Inc.
One Canon Plaza
Lake Success, NY 11042

Contents

Basic Printing

Turning on the Printer 2
Turning off the Printer 3
Loading Paper 4
Using Specialty Media 18
Printing with Windows 20
Printing with Macintosh 23
Canceling Printing 26

Advanced Printing

Printing Photographs Directly from a PictBridge Compliant Device 28
Accessing the Printer Driver (Windows) 35
Using the Bundled Software 36

Printing Maintenance

Replacing an Ink Tank 37
When Printing Becomes Faint or Colors are Incorrect 46
Printing the Nozzle Check Pattern 47
Print Head Cleaning 52
Print Head Deep Cleaning 56
Aligning the Print Head 60

Troubleshooting

Cannot Install the Printer Driver 65
Cannot Connect to PC Properly 66
Print Results Not Satisfactory or Contains Errors 67
Troubleshooting Printer Hardware 70
Paper Does Not Feed Properly 72
Paper Jams 73
Handling Error Messages 77
An Error Message Appears on the Screen 79
Cannot Print Properly from the Digital Camera 82

Appendix

Specifications 87
Safety Precautions 92
Regulatory Information 94
CANON U.S.A., INC. LIMITED WARRANTY --- (USA Only) 95

Index 97

Basic Printing

Note This *Quick Start Guide* describes some of the features of your printer and how to use them. For more information, view the iP5200R *User's Guide* and *Printer Driver Guide* installed on your computer, or use the online help within your printer driver interface:

Windows

While in the printer's properties window, press the **F1** key, or click ? in the upper right corner. Then click the feature you want to know more about, or click the **Help** button when displayed.

Macintosh

While in the **Page Setup** dialog box or **Print** dialog box, click ? in the lower left corner.
Clicking ? provides detailed information about each setting.
When the Help window appears, select your desired topic.

Turning on the Printer

1 **Press the POWER button.**

The **POWER** lamp flashes green while the printer warms up and changes to steady (non-flashing) when the printer is ready.

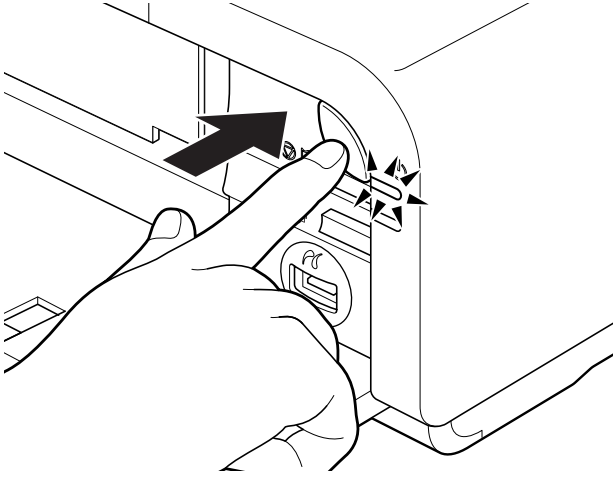

Important If the **ALARM** lamp begins flashing orange, refer to "Handling Error Messages" on page 77.

Turning off the Printer

1 **To turn off the printer, press the POWER button.**

When the **POWER** lamp stops blinking, the printer is turned off.

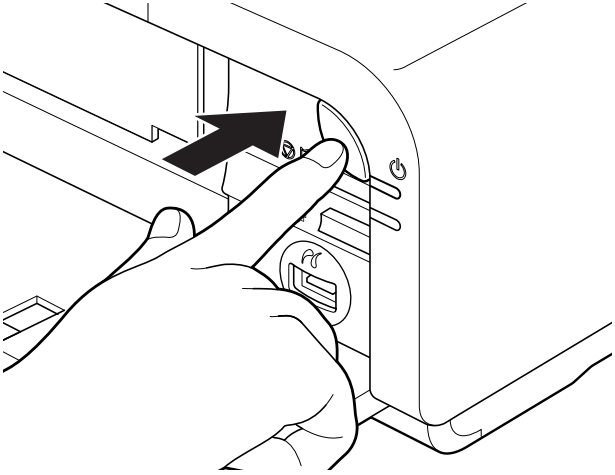

Important **About the Power Plug**

When removing the power plug after turing off the printer, be sure to check that the **POWER** lamp is not lit. If the power plug is removed from the wall outlet with the **POWER** lamp lit or blinking green, the printer cannot protect its print heads and may be unable to print.

Loading Paper

This section describes how to load paper in the Auto Sheet Feeder and the Cassette.

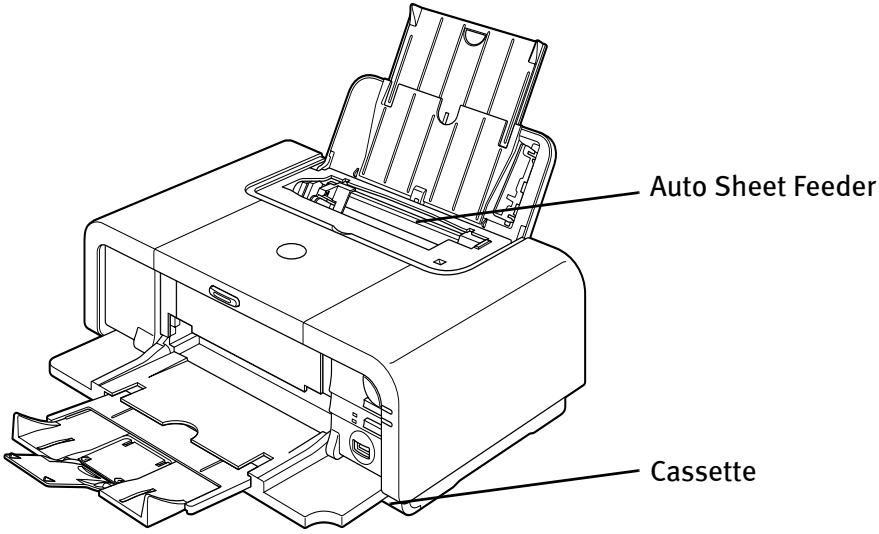

■ Print Media to Avoid

Do not use the following types of paper. Using such paper will not only produce unsatisfactory results, but can also cause the printer to jam or malfunction.

- Folded, curled or wrinkled paper
- Damp paper
- Excessively thin paper (less than 64 gsm or 17 lb)
- Excessively thick paper* (more than 105 gsm or 28 lb)

  * non-Canon branded paper
- Picture postcards
- Postcards affixed with photos or stickers
- Envelopes with double flaps
- Envelopes with sticker flaps
- Envelopes with an embossed or treated surface
- Any type of paper with holes

■ Using the Auto Sheet Feeder and the Cassette

You can load paper in both the Auto Sheet Feeder and Cassette.

Loading paper in the Auto Sheet Feeder is easy, and is convenient if you frequently switch to and print on various sizes or types of paper.

Loading paper in the Cassette allows you to print without reloading paper for each job. This is convenient for loading a certain type of paper, such as plain paper, you regularly print onto.

Loading paper in both the Auto Sheet Feeder and Cassette makes the following paper feed methods available:

* Legal-sized paper and 2.13" x 3.39"/ 54.0 x 86.0 mm size paper, and Photo Stickers are not loadable in the Cassette.

- Changing the paper source to feed different types/sizes of paper

  If you load plain paper in the Cassette and photo paper in the Auto Sheet Feeder, changing the paper source allows you to print on both types of paper without removing and reloading paper. To change the paper source, use the Paper Feed Switch on the printer or printer driver.

  You can also specify the type/size of paper to be fed from the Cassette for regular use with the printer driver. For example, you can specify that Letter-sized plain paper is always fed from the Cassette whenever you print.

Note For information on the printer driver settings, refer to the *Printer Driver Guide*.

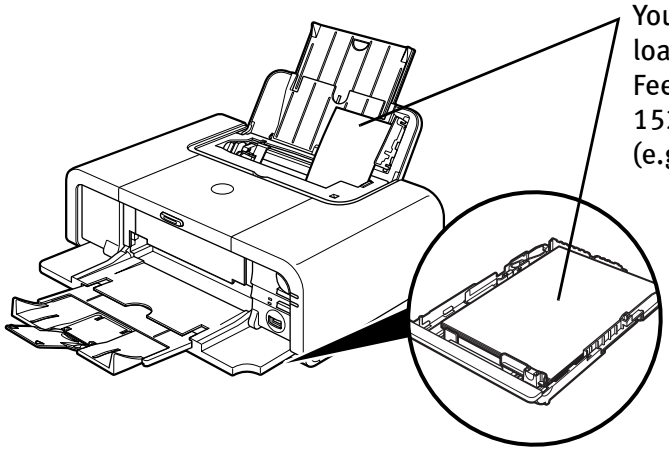

You can switch between paper loaded in the Auto Sheet Feeder (e.g., 4" x 6" / 101.6 x 152.4 mm) and the Cassette (e.g., Letter-sized paper).

- Continuous printing on the same type/size of paper by using both the Auto Sheet Feeder and Cassette together

  If the Auto Sheet Feeder or Cassette runs out of paper, the paper source automatically switches to the other one. This is useful for printing onto a large volume of paper. To use this feature, you need to configure the printer driver beforehand.

  Note For information on the printer driver settings, refer to the *Printer Driver Guide*.

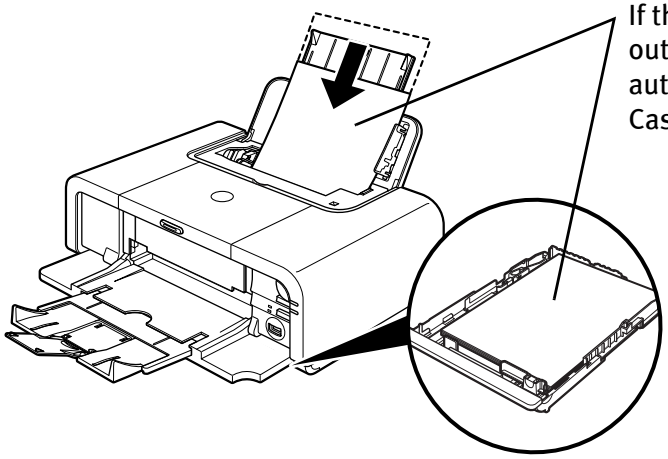

- Choosing the paper source to match the location of the printer

  You can use just the Auto Sheet Feeder or Cassette according to the location of the printer.

  For example, if you intend to install the printer in a small place, such as on a shelf with minimal space, you can use just the Cassette for printing.

  Note Legal-sized paper and 2.13" x 3.39"/ 54.0 x 86.0 mm size paper, and Photo Stickers are not loadable in the Cassette.
  If you intend to use only the Cassette, check any usage restrictions in advance.

■ Loading Plain Paper in the Auto Sheet Feeder

Note
- For detailed information on the specialty media Canon provides for use with its various printers, refer to "Using Specialty Media" on page 18.
- See "Printing Media" in the *User's Guide* for detailed instructions on how to load specialty media into the printer.

1 **Flatten the four corners of the paper before loading it.**

Important When paper is curled, hold the opposing curled corners and gently bend them in the opposite direction until the paper becomes completely flat.

2 **Prepare to load paper.**

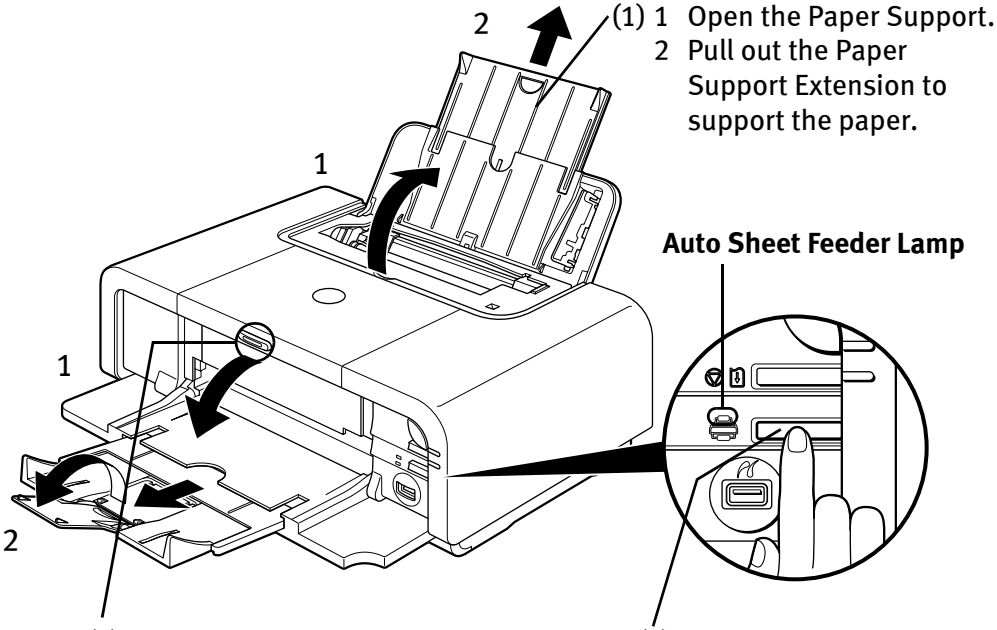

(1) 1 Open the Paper Support.
2 Pull out the Paper Support Extension to support the paper.

(2) 1 Push the Open Button above the Paper Output Tray. The Paper Output Tray automatically opens.
2 Pull out the Paper Output Tray Extension completely.

(3) Press the Paper Feed Switch so that the Auto Sheet Feeder lamp lights.

Note You can also select the paper source with the printer driver. For details, refer to the *Printer Driver Guide*.

3 Load the paper.

Load Limit Mark
Do not load beyond this Load Limit Mark.

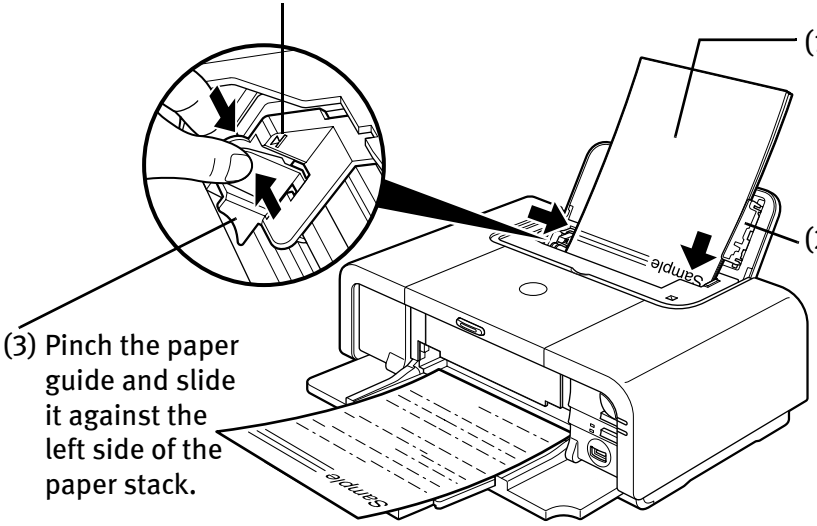

(1) Load the paper into the Auto Sheet Feeder with the print side facing UP.

(2) Align the paper stack against the Cover Guide on the right side of the Paper Support.

(3) Pinch the paper guide and slide it against the left side of the paper stack.

Important Ensure that the Cover Guide stands when you load paper in the Auto Sheet Feeder.

Note

- You can use general copy paper or Canon's Super White Paper.
- You can load up to 150 sheets of plain paper (64 gsm or 17 lb, 13 mm or 0.52 inches in height) in the Auto Sheet Feeder. However, do not stack more than 50 sheets in the Paper Output Tray.
- Do not touch the printed surfaces until the ink dries. For specific drying times, refer to the instructions packaged with your media.

Loading Envelopes

Use either European DL or US Comm. Env. #10 size envelopes.

The address is rotated automatically to match the direction of the envelope when printing.

Important
- Do not use envelopes with embossed or treated surfaces, a double flap, pressure seals or sticker flaps.
- Select either **European DL Env.** or **US Comm. Env. #10** in the printer driver according to the envelope size you are using. If you do not, the address will be printed in the wrong direction.

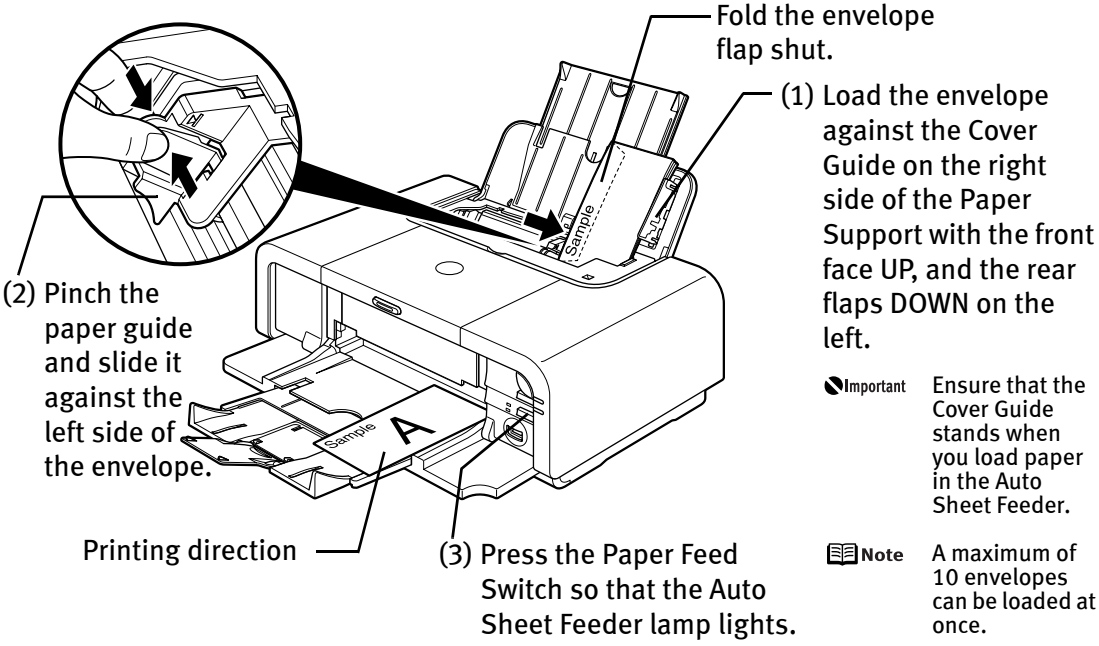

Important: Ensure that the Cover Guide stands when you load paper in the Auto Sheet Feeder.

Note: A maximum of 10 envelopes can be loaded at once.

(4) Select **Envelope** in **Media Type**, and then select **European DL Env.** or **US Comm. Env. #10** in **Page Size**.

For a detailed description of the printer driver settings, refer to "Printing with Windows" on page 20, "Printing with Macintosh" on page 23.

■ Loading Other Small-Sized Paper in the Auto Sheet Feeder

Important Cutting plain paper to 4" x 6" / 101.6 mm x 152.4 mm, 5" x 7" / 127.0 x 177.8 mm, or 2.13" x 3.39" / 54.0 x 86.0 mm (Credit Card) size for a trial printing can cause paper jams.

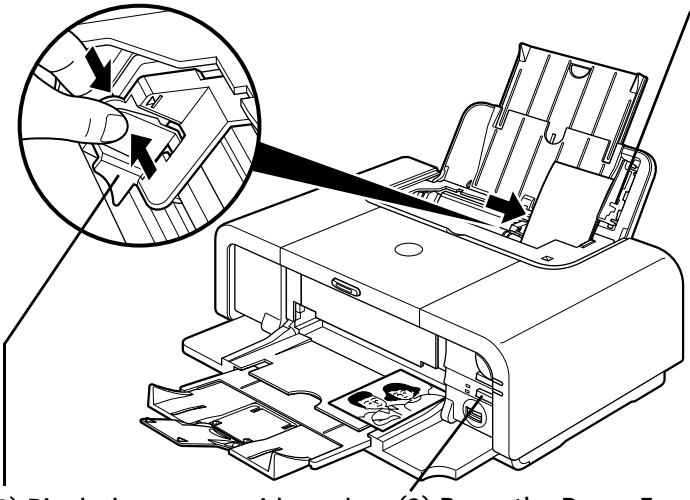

(1) Load the paper into the Auto Sheet Feeder with the print side facing UP and align the Cover Guide on the right side of the Paper Support.

Important Ensure that the Cover Guide stands when you load paper in the Auto Sheet Feeder.

Note

- Load the paper lengthways regardless of the direction of the document.
- You can load up to 20 sheets of 4" x 6" or 2.13" x 3.39" (Credit Card) -sized paper; 10 sheet of 5" x 7"-sized paper.

(2) Pinch the paper guide and slide it against the left side of the paper stack.

(3) Press the Paper Feed Switch so that the Auto Sheet Feeder lamp lights.

(4) Select **4 x 6 in 101.6 x 152.4 mm**, **5 x 7 in 127.0 x 177.8 mm**, or **Credit Card 2.13 x 3.39 in 54 x 86 mm** from **Paper Size** in the printer driver.

For a detailed description of the printer driver settings, refer to "Printing with Windows" on page 20, or "Printing with Macintosh" on page 23.

Important Always load paper in portrait orientation. Loading paper in landscape orientation can cause the paper to be jammed.

Portrait **Landscape**

Note We recommend using genuine Canon photo media when printing photographs.
See "Using Specialty Media" on page 18.

■ Loading Plain Paper in the Cassette

Ensure that the paper is loadable in the Cassette. Legal-sized paper and 2.13" x 3.39" / 54.0 x 86.0 mm size paper, and Photo Stickers are not loadable in the Cassette.

Note

- For detailed information on the specialty media Canon provides for use with its various printers, refer to "Using Specialty Media" on page 18.
- See "Printing Media" in the *User's Guide* for detailed instructions on how to load specialty media into the printer.

1 **Flatten the four corners of the paper before loading it.**

Important When paper is curled, hold the opposing curled corners and gently bend them in the opposite direction until the paper becomes completely flat.

2 **Prepare to load paper.**

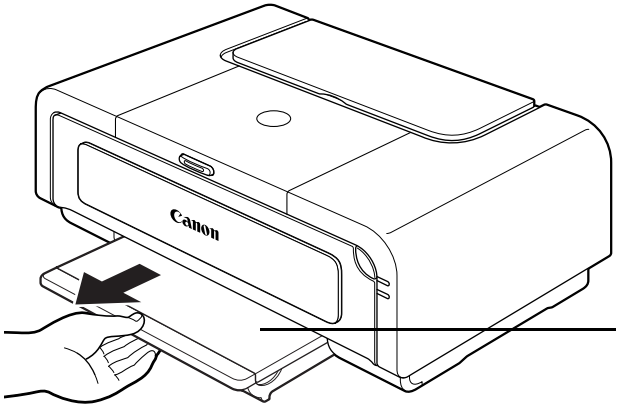

(1) Pull out the Cassette from the printer.

(2) Remove the Cover on the Cassette.

3 Adjust the size of the Cassette.

When loading A5- or larger sized paper (nonstandard-size paper: 203 mm / 8 inches or more in length), extend the Cassette.

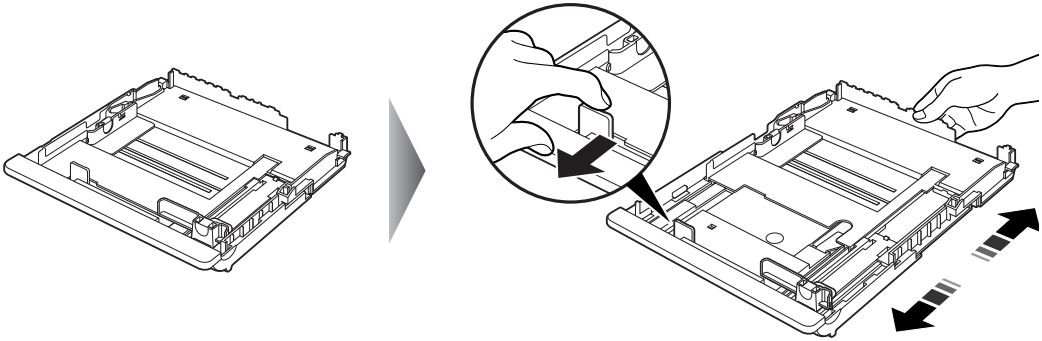

When loading 5" x 7"- or smaller sized paper (nonstandard-size paper: less than 203 mm/ 8 inches in length), do not extend the Cassette.

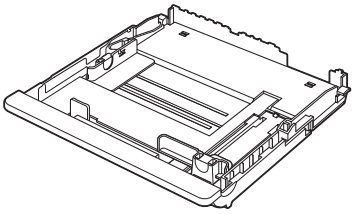

Note Legal-sized paper and 2.13" x 3.39"/ 54.0 x 86.0 mm size paper, and Photo Stickers are not loadable in the Cassette.

4 Load the paper. (Print side facing DOWN)

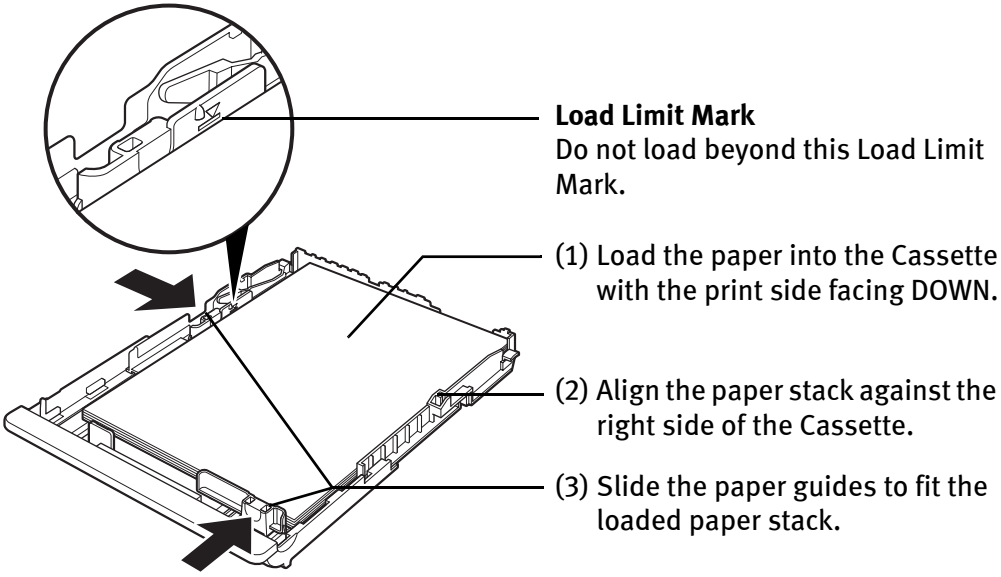

Note

- You can use general copy paper or Canon's Super White Paper.
- You can load up to 150 sheets of plain paper (64 gsm or 17 lb, 13 mm or 0.52 inches in height) in the Cassette. However, do not stack more than 50 sheets in the Paper Output Tray.

5 Insert the Cassette into the printer.

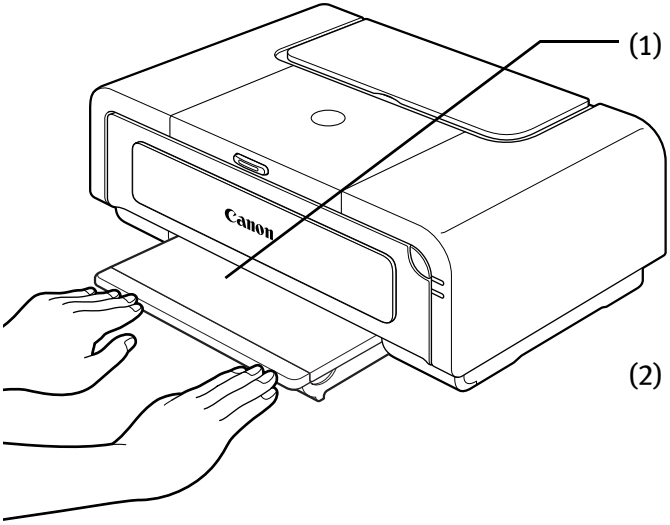

(1) Set the Cover on the Cassette.

(2) Insert the Cassette into the printer.
Push the Cassette all the way into the printer.

Note If the Cassette has been extended to accommodate paper sizes larger than 5" x 7", the front edge of the cassette will extend beyond the front of the printer.

6 Prepare the Paper Output Tray.

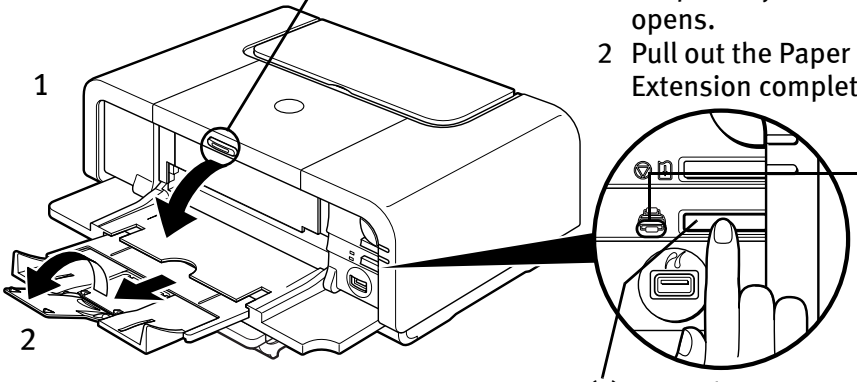

(1) 1 Push the Open Button above the Paper Output Tray. The Paper Output Tray automatically opens.
2 Pull out the Paper Output Tray Extension completely.

Cassette Lamp

(2) Press the Paper Feed Switch so that the Cassette lamp lights.

Note
- You can also select the paper source with the printer driver. For details, refer to the *Printer Driver Guide*.
- Do not touch the printed surfaces until the ink dries. For specific drying times, refer to the instructions packaged with your media.

Loading Envelopes

Use either European DL or US Comm. Env. #10 size envelopes.

The address is rotated automatically to match the direction of the envelope when printing.

Important

- Do not use envelopes with embossed or treated surfaces, a double flap, pressure seals or sticker flaps.
- Select either **European DL Env.** or **US Comm. Env. #10** in the printer driver according to the envelope size you are using. If you do not, the address will be printed in the wrong direction.

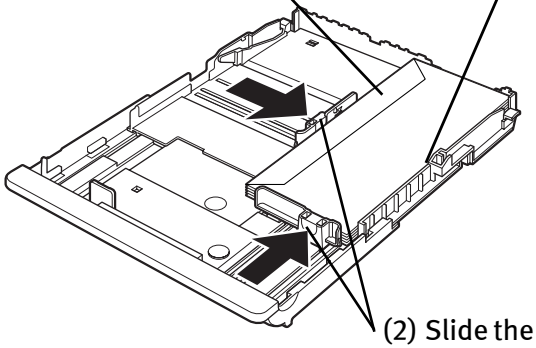

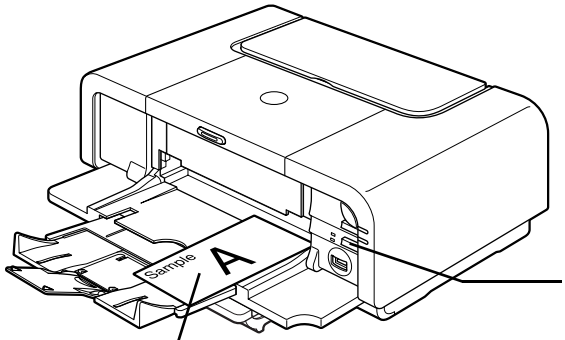

(3) Press the Paper Feed Switch so that the Cassette lamp lights.

Printing direction

(4) Select **Envelope** in **Media Type**, and then select **European DL Env.** or **US Comm. Env. #10** in **Page Size**.

For a detailed description of the printer driver settings, refer to **"Printing with Windows"** on page 20, **"Printing with Macintosh"** on page 23.

■ Loading 4" x 6" or 5" x 7"-Sized Paper in the Cassette

Important

- Do not leave photo paper, such as Photo Paper Pro, in the Cassette for a long time. This may cause paper discoloration due to natural aging.
- Cutting plain paper to 4" x 6" / 101.6 mm x 152.4 mm or 5" x 7" / 127.0 x 177.8 mm size for a trial printing can cause paper jams.

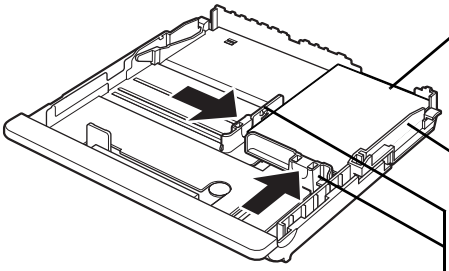

(1) Load the paper into the Cassette with the print side facing DOWN.

Note

- Do not extend the Cassette.
- Load the paper lengthways regardless of the direction of the document.
- You can load up to 20 sheets of 4" x 6"-sized paper or 10 sheets of 5" x 7"-sized paper.

(2) Align the paper stack against the right side of the Cassette.

(3) Slide the paper guides to fit the loaded paper stack.

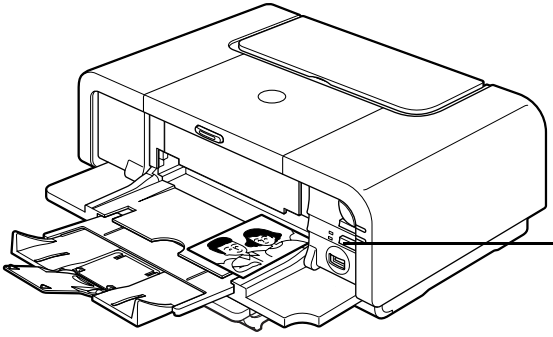

(4) Press the Paper Feed Switch so that the Cassette lamp lights.

(5) Select **4 x 6 in 101.6 x 152.4 mm** or **5 x 7 in 127.0 x 177.8 mm** from **Paper Size** in the printer driver.

For a detailed description of the printer driver settings, refer to **"Printing with Windows"** on page 20, or **"Printing with Macintosh"** on page 23.

Important Always load paper in portrait orientation. Loading paper in landscape orientation can cause the paper to be jammed.

Portrait **Landscape**

Note We recommend using genuine Canon photo media when printing photographs.
See **"Using Specialty Media"** on page 18.

Using Specialty Media

Canon recommends that you use genuine Canon media to ensure optimal print quality.

■ Photo Quality Media

- High Resolution Paper
- Glossy Photo Paper
- Matte Photo Paper
- Photo Paper Plus Double Sided
- Photo Paper Plus Glossy
- Photo Paper Plus Semi-gloss
- Photo Paper Pro
- Photo Stickers

■ Media Suited for Business Documents

- High Resolution Paper
- Transparencies

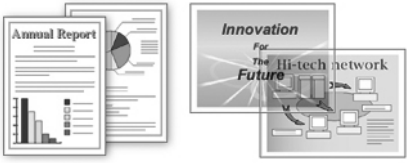

Canon Specialty Media

Media Type	Paper Support Load Limit		Printer Driver Setting for Media Type
	Auto Sheet Feeder	Cassette	
High Resolution Paper	Up to 80 sheets	Up to 80 sheets	High Resolution Paper
Super White Paper	Up to 13 mm or 0.52 inches	Up to 13 mm or 0.52 inches	Plain Paper
Glossy Photo Paper	Letter: up to 10 sheets 4" x 6": up to 20 sheets 2.13" x 3.39": up to 20 sheets	Letter: up to 10 sheets 4" x 6": up to 20 sheets 2.13" x 3.39": not loadable*3	Glossy Photo Paper
Matte Photo Paper	Letter: up to 10 sheets 4"x 6": up to 20 sheets	Letter: up to 10 sheets 4"x 6": up to 20 sheets	Matte Photo Paper
Photo Paper Plus Double Sided*1	Letter: up to 10 sheets 5" x 7": up to 10 sheets	Letter: up to 10 sheets 5" x 7": up to 10 sheets	Photo Paper Plus Double Sided
Photo Paper Plus Glossy*1	Letter: up to 10 sheets 5" x 7": up to 10 sheets 4" x 6": up to 20 sheets	Letter: up to 10 sheets 5" x 7": up to 10 sheets 4" x 6": up to 20 sheets	Photo Paper Plus Glossy
Photo Paper Plus Semi-gloss*1	Letter: up to 10 sheets 4" x 6": up to 20 sheets	Letter: up to 10 sheets 4" x 6": up to 20 sheets	Photo Paper Plus Glossy
Photo Paper Pro*1	Letter: up to 10 sheets 4" x 6": up to 20 sheets	Letter: up to 10 sheets 4" x 6": up to 20 sheets	Photo Paper Pro
Photo Stickers*2	1 sheet	Not loadable*3	Photo Paper Plus Glossy
Transparencies	Up to 30 sheets	Up to 30 sheets	Transparencies
T-Shirt Transfers	1 sheet	1 sheet	T-Shirt Transfers

*1 When loading a stack of paper, the printed side may be marked when it is fed in. If this happens, load paper one sheet at a time.

*2 You can specify the print setting easily by using the Easy-PhotoPrint provided with the *Setup Software & User's Guide CD-ROM*.

*3 Feeding from the Cassette can damage the printer. Always load in the Auto Sheet Feeder.

Note

- When using plain paper (64 gsm or 17 lb), up to 150 sheets (13 mm or 0.52 inches in height) can be loaded in the Auto Sheet Feeder and Cassette respectively. Select **Plain Paper** from **Media Type** in the printer driver.
- For a detailed description of printing media types, refer to the *User's Guide.*

Windows

Printing with Windows

Note

- Menu and command names may differ between software applications, and more steps may be required. For details, refer to the documentation for each software application you use.
- The steps described in this section are for printing in Windows® XP Service Pack 2 (hereafter, called Windows XP SP2).

1 **Turn on the printer.**

See "Turning on the Printer" on page 2.

2 **Load the paper in the printer.**

See "Loading Paper" on page 4.

3 **Ensure that the proper paper source is selected.**

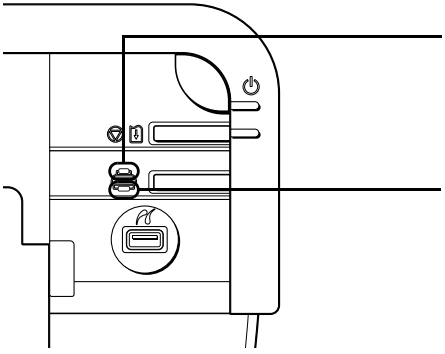

When the Auto Sheet Feeder lamp is lit, paper is fed from the Auto Sheet Feeder.

When the Cassette lamp is lit, paper is fed from the Cassette.

4 **Create a document or open a file to print.**

5 Open the printer properties dialog box.

(1) Select **Print** from the application software's **File** menu.
The **Print** dialog box opens.

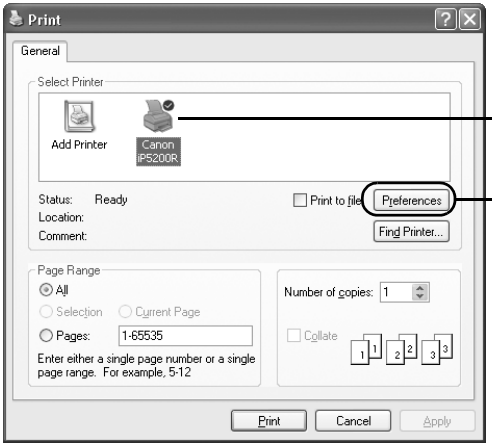

(2) Ensure that your printer is selected.

(3) Click **Preferences** or **Properties.**

6 Specify the required settings.

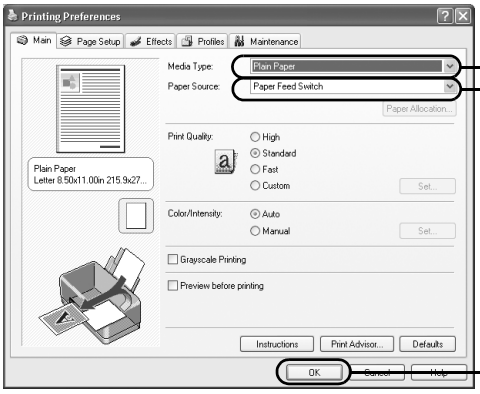

(1) Click **Media Type** to select the type of media loaded in the printer.
Ensure that **Paper Feed Switch** is selected from **Paper Source.**

(2) Click **OK.**

Note

- From the **Page Setup** tab, select the correct document size to be printed.
- This section describes the procedure for selecting the paper source with the Paper Feed Switch on the printer. For a detailed description of the **Paper Source** settings, refer to the *Printer Driver Guide*.
- To adjust the **Print Quality** settings, select **Custom** and click **Set** on the **Main** tab. You can control the print quality in the **Set Print Quality** dialog box.
- For details about other printer driver functions, click **Help** or **Instructions** to view the Help or *Printer Driver Guide*. **Instructions** is only displayed when the On-screen Manual is installed.
- Selecting the **Preview before printing** check box displays a preview screen that allows you to confirm the selected printing effects and how your document will look when printed. Some applications do not have a preview function.

7 Print the document.

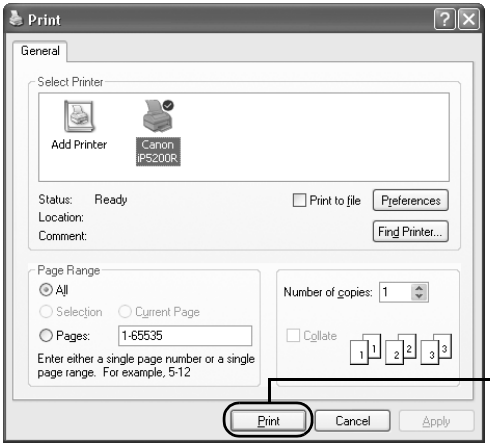

(1) Click **Print** or **OK**.

Note You can cancel a print job in progress by simply pressing the **RESUME/CANCEL** button on the printer.
See "Canceling Printing" on page 26.

Macintosh

Printing with Macintosh

Note

- Menu and command names may differ between software applications, and more steps may be required. For details, refer to the documentation for each software application you use.
- The steps described in this section are for printing in Mac® OS X v.10.3.x (hereafter called Macintosh®).

1 **Turn on the printer.**

See "Turning on the Printer" on page 2.

2 **Load the paper on the printer.**

See "Loading Paper" on page 4.

3 **Ensure that the proper paper source is selected.**

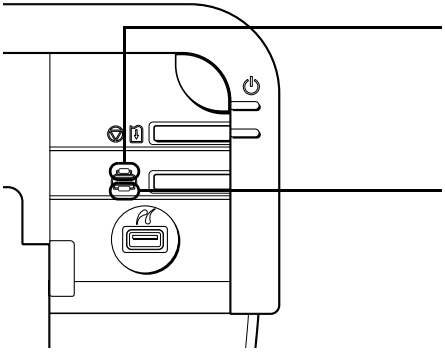

When the Auto Sheet Feeder lamp is lit, paper is fed from the Auto Sheet Feeder.

When the Cassette lamp is lit, paper is fed from the Cassette.

4 **Create a document or open a file to print.**

5 Select **Paper Size.**

(1) Select **Page Setup** from the application software's **File** menu.
The **Page Setup** dialog box opens.

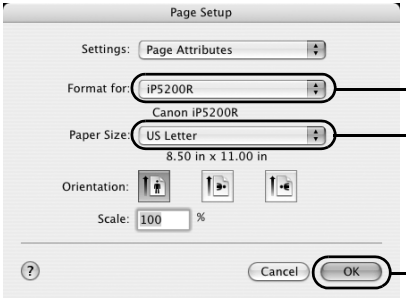

(2) Confirm that **iP5200R** is selected in **Format for.**

(3) Select the desired paper size from **Paper Size.**

(4) Click **OK.**

6 Specify the required settings.

(1) Select **Print** from the application software's **File** menu.
The **Print** dialog box opens.

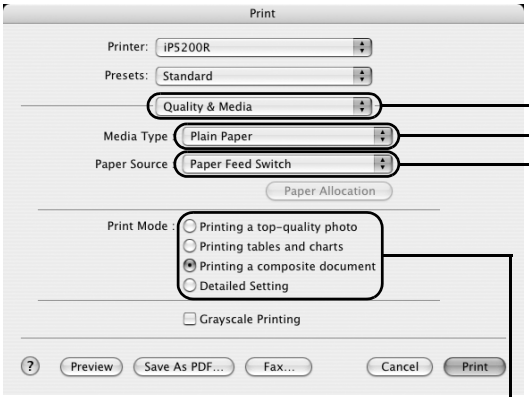

(2) Select **Quality & Media** from the pop-up menu.

(3) Select the desired media type from **Media Type.**

(4) Ensure that **Paper Feed Switch** is selected from **Paper Source.**

(5) Select the print mode appropriate to your document from **Print Mode.**

Note

- This section describes the procedure for selecting the paper source with the Paper Feed Switch on the printer. For a detailed description of the **Paper Source** settings, refer to the *Printer Driver Guide*.
- When you select the print mode appropriate to your document from **Print Mode**, the document will be printed in color and at a print quality suited to the characteristics of the **Media Type** you have selected.
  - **Printing a top-quality photo**: Select when printing documents consisting mainly of photographs and graphics featuring fine color gradation.
  - **Printing tables and charts**: Select when printing documents consisting mainly of graphs and graphics (illustrations) with strong color definition.
  - **Printing a composite document**: Select when printing documents consisting mainly of text.
  - **Detailed Setting**: Select to fine-tune the **Print Quality** and **Halftoning** settings.

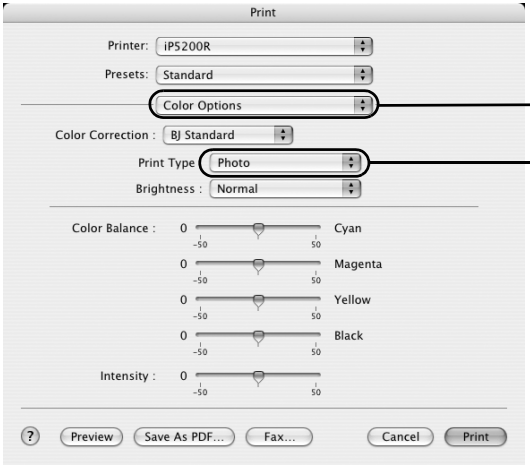

(6) Select **Color Options** from the pop-up menu.

(7) Select the type of the document from **Print Type**.

Note

- For details about other printer driver functions, click ? to view the *Printer Driver Guide*. If the On-screen Manual is not installed, the *Printer Driver Guide* is not displayed even if ? is clicked.
- Clicking the **Preview** button displays a preview screen that allows you to confirm the selected printing effects and how your document will look when printed. Some applications do not have a preview function.

7 **Print the document.**

(1) Click **Print**.

Note You can cancel a print job while printing.
See "Canceling Printing" on page 26.

Canceling Printing

Windows

You can cancel a print job while printing, with the **RESUME/CANCEL** button on the printer.

1 **Press the RESUME/CANCEL button while printing.**

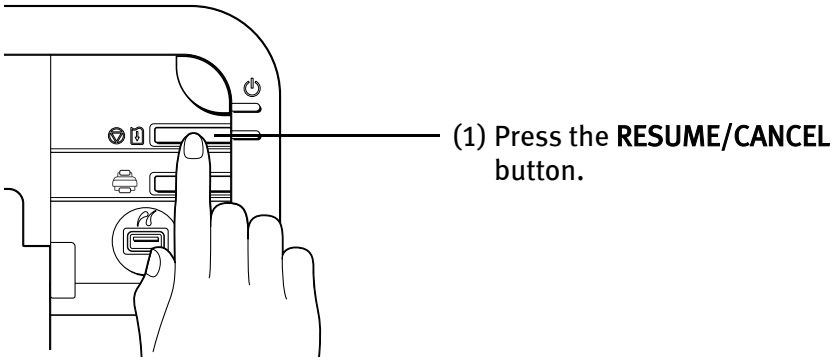

Printing is canceled and paper is fed out.

Note You can also cancel a print job by clicking **Cancel Printing** on the **Canon IJ Status Monitor**. To display the **Canon IJ Status Monitor**, click **Canon iP5200R** on the taskbar.

Macintosh

1 **Select Print from the File menu in your application program.**

The Print dialog box opens.

2 **Select Edit Printer List from the Printer pop-up menu.**

The Printer List opens.

3 **Double-click the printer name displayed in the Name list.**

The iP5200R dialog box opens.

4 **Select the desired document, then click Delete icon.**

Note To temporality stop a job in progress, click **Pause**. To cancel all the jobs in the list, click **Stop Printing**.

Advanced Printing

Printing Photographs Directly from a PictBridge Compliant Device

Connecting a PictBridge compliant device such as a digital camera, camcorder or mobile phone to the printer allows you to print recorded images directly without using a computer.

Note

- PictBridge is an industry standard enabling a range of digital photo solutions, including the direct printing of photos from a digital camera, camcorder or mobile phone* without the need to use a computer.
- It is possible to specify which images to print and various print settings from the operation panel of your camera or mobile phone.
- Canon Bubble Jet Direct allows you to print photos from a Canon Bubble Jet Direct compatible (PictBridge incompatible) digital camera or digital video camcorder without a computer, by simply connecting the digital camera or digital camcorder to this printer.
  For details, refer to "Printing Photographs Directly from a Canon Bubble Jet Direct Compatible Digital Camera" on page 85.

* Hereafter, the PictBridge compliant digital camera, digital camcorder, or camera-equipped mobile phone are collectively called a PictBridge compliant device.

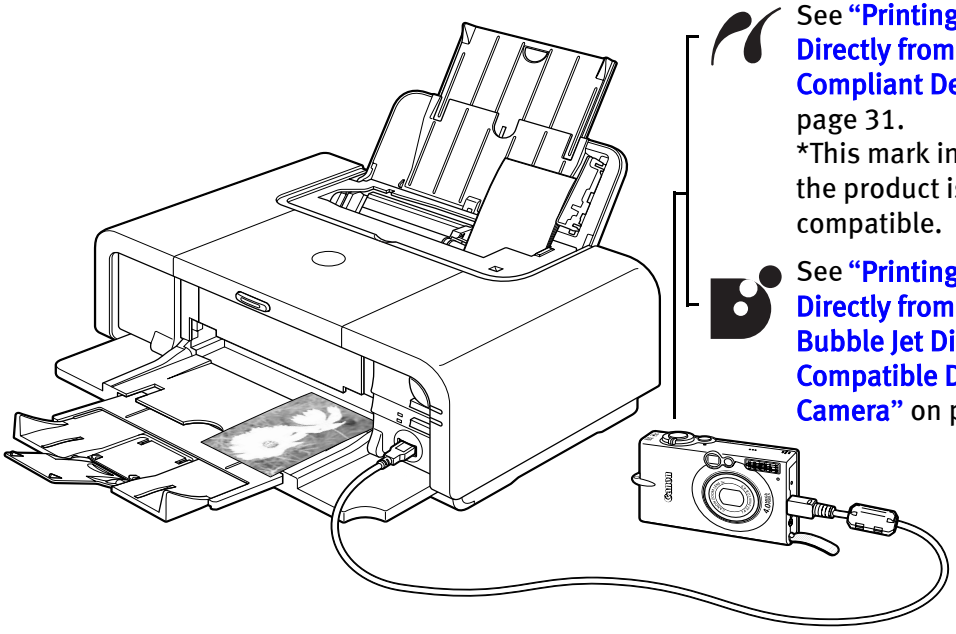

See "Printing Photographs Directly from a PictBridge Compliant Device" on page 31.
*This mark indicates that the product is PictBridge-compatible.

See "Printing Photographs Directly from a Canon Bubble Jet Direct Compatible Digital Camera" on page 85.

Connecting to a PictBridge Compliant Device

To connect a PictBridge compliant device to this printer, use the USB cable supplied with the device.

Caution Do not connect any equipment other than PictBridge compliant devices or Canon Bubble Jet Direct compatible digital camera to the Direct Print Port of the printer. If you do so, electric shock, fire, or damage to the device could result.

Note

- When printing photos with the digital device connected to the printer, it is advisable to use the AC adapter supplied with the device. If you use the device battery, be sure to charge it fully.
- The Print Head cannot be aligned using the controls of the digital device. The print head alignment can be performed simply by pressing the **RESUME/CANCEL** button on the printer, or by connecting the printer to the computer and then executing automatic print head alignment. Refer to "Aligning the Print Head" on page 60.

1 Set up the printer.

2 Turn on the printer.

See "Turning on the Printer" on page 2.

3 Load the paper in the printer.

See "Loading Paper" on page 4.

4 Connect the PictBridge compliant device to the printer.

Note Depending on the model or brand of your device, you may have to select a print mode compliant with PictBridge before connecting the device.
You may also have to turn on the device or select Play mode manually after connecting the device to the printer.
Perform necessary operations according to the instruction manual supplied with your device.

(1) Make sure the device is turned off.

(2) Connect the device to the printer using the USB cable.

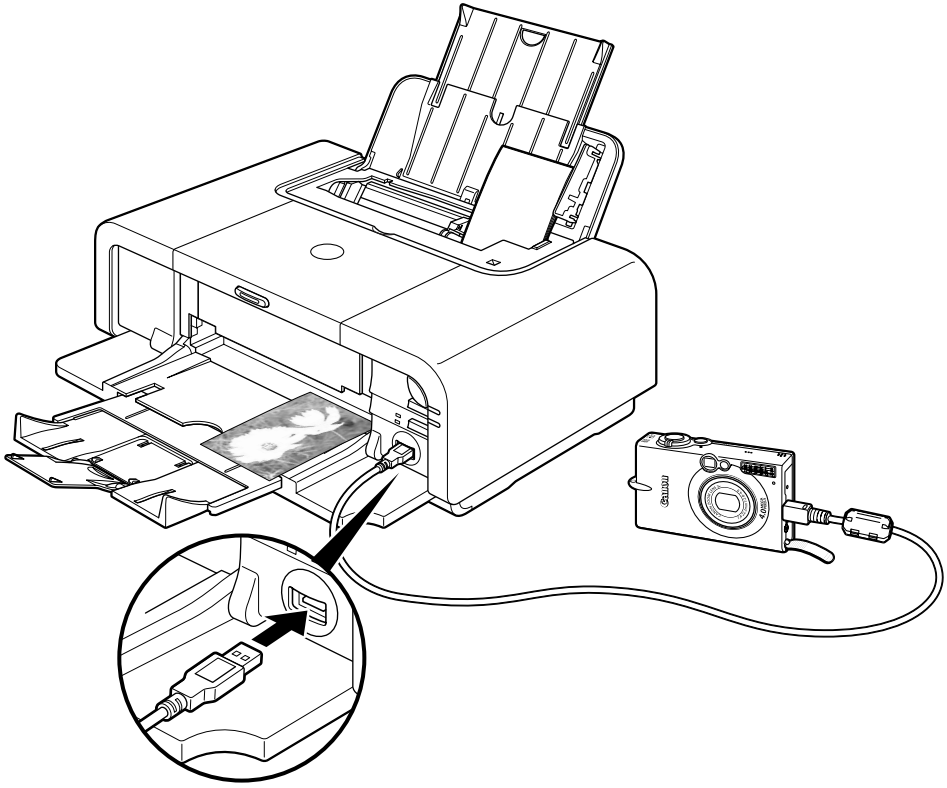

Note The device turns on automatically, when connected to the printer.
For a device not turns on automatically, turn it on manually.

(3) Turn on and set up the device for direct printing.

When the connection between the device and printer has been established, the **POWER** lamp on the printer flashes twice.

* The power-on sequence may differ depending on the model or brand of the device.

Either of the following icons will display on the LCD display of the device when the printer is correctly connected.

A PictBridge-compliant device.

A Canon Bubble Jet Direct compatible digital camera.

■ Printing Photographs Directly from a PictBridge Compliant Device

When operating the device, be sure to follow the instructions given in the instruction manual supplied with the device. Let's take a look at the paper size, paper type, layout, image optimization modes, and date/file number printing modes that can be set on a PictBridge compliant device connected to the printer.

Checking or Changing PictBridge Print Settings From Your Camera

To change the PictBridge print settings, operate your device to select the PictBridge print setup mode and confirm or change the settings.

When a PictBridge-compatible device is connected and printing is started with no printing option selected, this printer operates based on the following default settings:

- Paper size .....4" x 6"
- Paper type .....Photo (Photo Paper Plus Glossy)
- Layout .....Borderless
- Trimming .....Off (No trimming)
- Image optimize .....ExifPrint
- Date/File No. print...Off (No printing)

Additional settings

The settings explained below cannot be made depending on the brand or model of your device. If any setting cannot be made, the default setting explained above is used.

Names of settings that are displayed on Canon PictBridge compliant device are used in the description given below. Different names may be displayed on your device depending on the brand or model.

For details, refer to your device's instruction manual.

About the Image Data Format for Printing

This printer accepts images* taken with a camera compatible with the Design rule for Camera File System and PNG files.

* Exif2.21 compliant

About “Paper size” and “Paper type”

By default, **4" x 6"** is selected from **Paper size** and **Photo** (Photo Paper Plus Glossy) is selected from **Paper type** for this printer. To use Photo Paper Pro, select **Fast Photo** from **Paper type**.

The following sizes and types of paper can be loaded in the printer by selecting options from **Paper size** and **Paper type**.

“Paper size” setting	“Paper type” setting	Paper loaded in printer
10 x 15 cm/4" x 6" (Default)	Photo (Default)	Photo Paper Plus Glossy
	Photo	Photo Paper Plus Semi-gloss
	Photo	Glossy Photo Paper
	Photo	Photo Stickers*1
	Fast Photo	Photo Paper Pro
13 x 18 cm/5" x 7"*2	Photo	Photo Paper Plus Glossy
5.4 x 8.6 cm/Credit Card	Photo	Glossy Photo Paper
A4/8.5" x 11" (Letter)*3*4	Photo	Photo Paper Plus Glossy
	Photo	Photo Paper Plus Semi-gloss
	Photo	Glossy Photo Paper
	Fast Photo	Photo Paper Pro

*1 This paper is exclusively used to print photo stickers. When printing on sticker paper, select **4" x 6"** in **Paper size**.

*2 This size can be selected only for Canon PictBridge compliant devices (note that it cannot be selected for some models).

*3 When **A4** or **8.5" x 11" (Letter)** is selected in **Paper size**, you can select **Plain Paper** in **Paper type**. When **Plain Paper** is selected in **Paper type**, bordered printing will be performed even if you select **Borderless** in **Layout**.

*4 When **A4** or **8.5" x 11" (Letter)** is selected in **Paper size**, you can print in 4-up layout.

About “Layout” and “Trimming”

By default, **Borderless** is selected for **Layout** and **Off (No trimming)** is selected for **Trimming** for this printer.

Note When printing onto Photo Stickers (16-up), use the following settings.

1. Select the Auto Sheet Feeder as the paper source. See “Loading Plain Paper in the Auto Sheet Feeder” on page 7.
   Always load Photo Stickers in the Auto Sheet Feeder.
2. Select **10 x 15 cm / 4" x 6"** for the **Paper size**, and **Photo** for the **Paper type**.
3. Select **N-up** for **Layout**, then select **16**.
   Some PictBridge compliant devices display the **Layout** option; **2-up**, **4-up**, **9-up**, and **16-up**. In this case always select **16-up**.
   If there are no options on the PictBridge compliant device that correspond to 2-up, 4-up, 9-up, or 16-up, printing on stickers is not possible.

About “Image optimize”

By default, **ExifPrint** is selected for this printer.

If you use a Canon PictBridge-compatible device, you can select **VIVID**, **NR**, **VIVID+NR**, or **Face**. (Note that these options cannot be selected for some models.)

Note

- When **VIVID** is selected, green and blue portions of photos are printed vividly.
- When **NR** (Noise Reduction) is selected, noise in blue portions, such as the sky, and dark portions is removed.
- When **VIVID+NR** is selected, functions of both **VIVID** and **NR** are performed.
- When **Face** is selected, backlit images are corrected.

About “Date/File No. print”

By default, **Off** is selected for this printer.

If you select an image which has had the shooting date embedded in it using a camera with the print mode, select **Off** for this function. If you select **Date**, **File No.**, or **Both**, the date and/or file number will be printed over the embedded date.

Other Settings

If you use a Canon PictBridge-compliant device, you can use the following print settings. (Note that these print settings cannot be used for some models.) For details, refer to your device's instruction manual.

- Shooting Info (Exif Data)

  You can print shooting info (Exif data) on photos in list format, or in the margins of specified photos.

  Select **Layout**, then select the item displayed with the [i] icon.

- 35 mm Film Style Layout (Contact Printing Layout)

  You can print selected photos or index-specified photos as 35 mm film style layout (contact printing layout).

  Select **Layout** then select the item displayed with the film icon.

Note

- Never disconnect the USB cable during printing.
- When disconnecting the USB cable between the device and printer, follow the instructions given in the instruction manual of the device.
- Controls of the device cannot be used for the following functions:
  - Print quality setting
  - Printer maintenance
- For the device operation method and troubleshooting, refer to your device manual. For print error messages, see "Cannot Print Properly from the Digital Camera" on page 82.

Checking or Changing PictBridge Print Settings From the Printer

You can change the printer's default PictBridge print settings, such as paper size and type. To do this, install the **Canon Setup Utility** from the included CD-ROM and connect the printer to a computer. For details, refer to the *User's Guide*.

Accessing the Printer Driver (Windows)

The printer properties dialog box can be opened from either within an application, or directly from the Windows **Start** menu.

Note This manual refers to Windows XP SP2 operation.
The operations may vary depending on the version of your Windows operating system.

■ Opening the Printer Properties Dialog Box from Your Application Program

Note Depending on your application program, the command and menu names may differ, and there may be more steps involved in opening the printer properties dialog box. For more details, see the user's manual for your application.

1 **In your application, select the command to print a document.**

The **Print** dialog box can usually be opened by selecting **Print** from the **File** menu.

2 **Ensure that the name of your printer is selected. Then click Preferences (or Properties).**

The printer properties dialog box opens.

■ Opening the Printer Properties Dialog Box Directly from the Start Menu

This method is used for printer maintenance and configuring shared print settings for all application programs.

1 **Click Start and select Control Panel, Printers and Other Hardware, and then Printers and Faxes.**

For non-Windows XP, click **Start**, select **Settings**, and then **Printers**.

2 **Select the icon of your printer.**

3 Open the **File** menu and select **Printing Preferences** (or **Properties**).

The printer properties dialog box opens.

When opening the printer properties dialog box from **Properties**, the tabs related to the Windows function (e.g., the **Ports** tab, or the **Details** tab) are displayed. These tabs are not displayed, when the printer properties dialog box is opened from **Printing Preferences** or applications. For details about these tabs, refer to the Windows documentation.

Note For details on how to set each function, refer to the Help or *Printer Driver Guide*.

Using the Bundled Software

The *Setup Software & User's Guide CD-ROM* includes photo applications designed to edit the photographs taken by a digital camera and print them as photo-lab quality prints without standard white borders. Please use the application(s) suitable for your print purposes.

Note
- To install applications, refer to the *Setup Guide*.
- For details about using the photo applications, refer to the *Photo Application Guide*.

■ Easy-PhotoPrint (Windows/Macintosh)

You can make a Borderless Print easily and quickly, just by selecting a photograph taken with a digital camera and the paper type on which to print. Also it has tools to correct red eye caused by the camera's flash or smooth and beautify the facial skin. It is compatible with ExifPrint*.

■ PhotoRecord (Windows)

You can create fun and unique photo albums with the decorative themes such as frame, background, and clip-art. You can also copy or move the decorated photos.

It is compatible with ExifPrint*.

■ Easy-WebPrint (Windows)

You can easily print out homepages displayed on Internet Explorer® in full size without its right-hand side being cropped. This application is automatically added to the Internet Explorer toolbar. Internet Explorer 5.5 or later must be installed.

* ExifPrint is the worldwide standard. Under ExifPrint, the digital camera can record data tags for specific camera settings and functions such as whether the flash was on or off, if the camera was in portrait or night scene mode, etc. Canon PIXMA Printers support ExifPrint and use a suitable photo application to read the camera data precisely, producing optimal prints. This enables you to create prints that reproduce color more accurately.

Printing Maintenance

Replacing an Ink Tank

Replace ink tank(s) if they are out of ink. When replacing them, check the model numbers and their installation positions.

With this printer, the ink tanks must be installed in the order (from left to right) indicated below:

- Black: CLI-8BK

CLI-8BK

- Black: PGI-5BK

PGI-5BK

- Yellow: CLI-8Y

CLI-8Y

- Magenta: CLI-8M

CLI-8M

- Cyan: CLI-8C

CLI-8C

Note Should missing characters or white streaks appear despite sufficient ink levels, refer to "When Printing Becomes Faint or Colors are Incorrect" on page 46.

Getting the Ink Level Information

Ink Level Indication on the Printer

You can confirm the ink level in each ink tank through the ink tank lamps. Open the Top Cover of the printer to see how the ink tank lamps light or flash.

Ink is low: The ink tank lamp flashes slowly (at about three second interval). Prepare a new ink tank.

Ink is out: The ink tank lamp flashes quickly (at about one second interval), and the **ALARM** lamp on the printer flashes orange four times. Replace the ink tank with a new one.

* When the **ALARM** lamp on the printer flashes orange seven or thirteen times, an error has occurred and therefore the printer is unable to print. For details, refer to **"Handling Error Messages"** on page 77.

Ink Level Indication on the PC

Windows

Open the **Canon IJ Status Monitor** to check the ink level information.

1. Open the printer properties dialog box.
   See **"Accessing the Printer Driver (Windows)"** on page 35.
2. Click **View Printer Status** on the **Maintenance** tab.
   The following message will be displayed.

   * You can also display the **Canon IJ Status Monitor** by clicking the **Canon IJ Status Monitor** button which appears on the taskbar during printing.

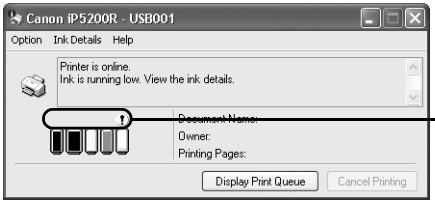

Confirm whether any symbols are displayed here.

Ink is low: The [!] symbol appears above an ink tank that is low.

Ink is out: The [x] symbol appears above an empty ink tank. Click **Ink Details** to show the ink tank information, then replace the ink tank with a new one.

Macintosh

Open the **Canon IJ Printer Utility** to check the ink level information.

1. Select **Applications** from the **Go** menu, and then double-click the **Utilities** folder.
2. Double-click the **Printer Setup Utility** icon.
   When using Mac OS X v.10.2, double-click the **Print Center** icon.
3. Select the name of your printer from the **Name** list and click **Utility**.
   When using Mac OS X v.10.2, select the name of your printer from the **Name** list and click **Configure**.
4. Select the name of your printer from the **Product** list and click **Maintenance**.
   The **Canon IJ Printer Utility** launches.
5. Select **Ink Level Information** from the pop-up menu.
   The following dialog box is displayed.

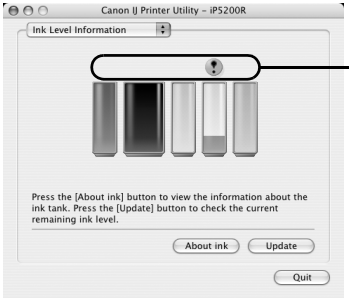

Confirm whether any symbols are displayed here.

Ink is low: The [!] symbol appears above an ink tank that is low.

Ink is out: The [x] symbol appears above an empty ink tank. Click **About ink** to show the ink tank information, then replace the ink tank with a new one.

■ Knowing When to Replace Ink Tanks

The **ALARM** lamp flashes orange four times once any one of the ink tanks is out of ink. If ink is out during printing, a message will be displayed on your PC. Check to see which ink tank is out of ink, and replace it with a new one. Close the Top Cover after ink tank replacement to resume printing.

Windows

- If printing has not finished, you can continue printing for a while by pressing the **RESUME/CANCEL** button on the printer with the empty ink tank installed. However, you will need to replace it with a new one as soon as printing finishes. If you continue printing with an empty ink tank, it may damage the printer.
  - * Printing does not resume if any of the ink tanks are removed. Be sure to press the **RESUME/CANCEL** button with the ink tanks installed.
  - * Continuing to print in the out of ink state will cause the remaining ink level to be displayed incorrectly in the Canon IJ Status Monitor.
- Click **Cancel Printing** to cancel printing. Replace the ink tank with a new one.

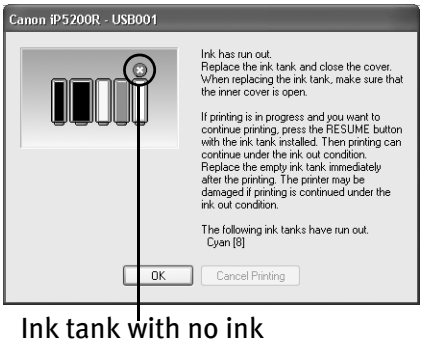

Ink tank with no ink

Macintosh

- If printing has not finished, you can continue printing for a while by pressing the **RESUME/CANCEL** button on the printer with the empty ink tank installed. However, you will need to replace it with a new one as soon as printing finishes. If you continue printing with an empty ink tank, it may damage the printer.

  * Printing does not resume if any of the ink tanks are removed. Be sure to press the **RESUME/CANCEL** button with the ink tanks installed.
  * Continuing to print in the out of ink state will cause the remaining ink level to be displayed incorrectly in the Canon IJ Printer Utility.

- Click **Delete Job** to cancel the current printing job. Click **Stop Job** to stop the current printing job. Click **Stop All Jobs** to stop all printing jobs. Replace the ink tank with a new one.

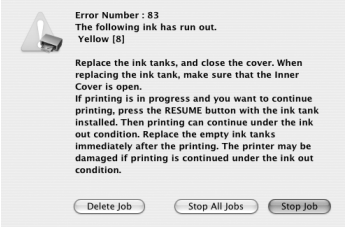

Replacing Ink Tanks

When an ink tank runs out of ink, replace it using the following steps.

1 **Ensure that the printer is on, and then open the Paper Output Tray.**

Push the Open Button above the Paper Output Tray. The Paper Output Tray automatically opens.

2 **Open the Top Cover.**

The Print Head Holder moves to the center.

Important If the Top Cover is left open for more than 10 minutes, the Print Head Holder moves to the right. Close and reopen the Top Cover to return the holder to the center.

3 **Remove the ink tank whose lamp is flashing fast.**

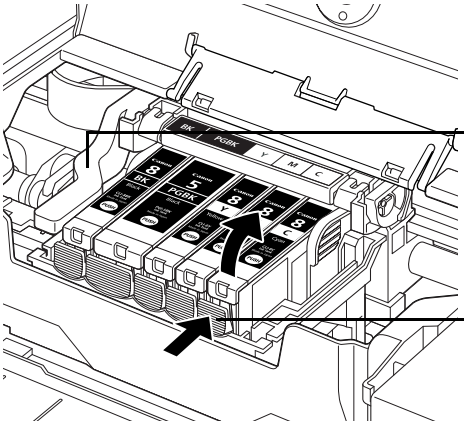

Important
- Handle ink tanks carefully to avoid staining clothing or the surrounding area.
- Discard empty ink tanks according to the local laws and regulations regarding disposal of consumables.

Note Be sure to replace ink tanks one by one when replacing more than one ink tank.

4 Prepare a replacement tank.

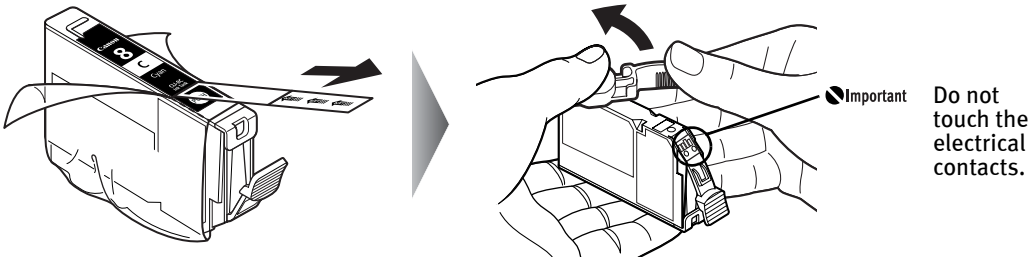

(1) Unpack the new ink tank and completely pull off the orange tape. Then, remove the film completely.

(2) Remove the orange protective cap from the bottom of the ink tank and discard it.

Important

- Be sure to remove the clear film from the ink tank in the exact order shown in step 4-(1), as failure to follow this step may cause the ink to leak and stain your clothes and hands.
- Do not touch the electrical contacts on the ink tank. Doing so can cause the printer to malfunction or become unable to print.
- Do not squeeze the side of ink tanks as this may cause the ink to leak out and stain your clothes and hands.
- Do not re-attach the protective cap once you have removed it.
- Do not touch the open ink port once the protective cap is removed, as this may prevent the ink from being ejected properly.
- Ink on the removed protective cap may stain your clothes and hands.
- Ensure that all the orange tape has been peeled off along the perforation. If there remains a part of the orange tape, ink may not be ejected correctly.

5 Insert the ink tank.

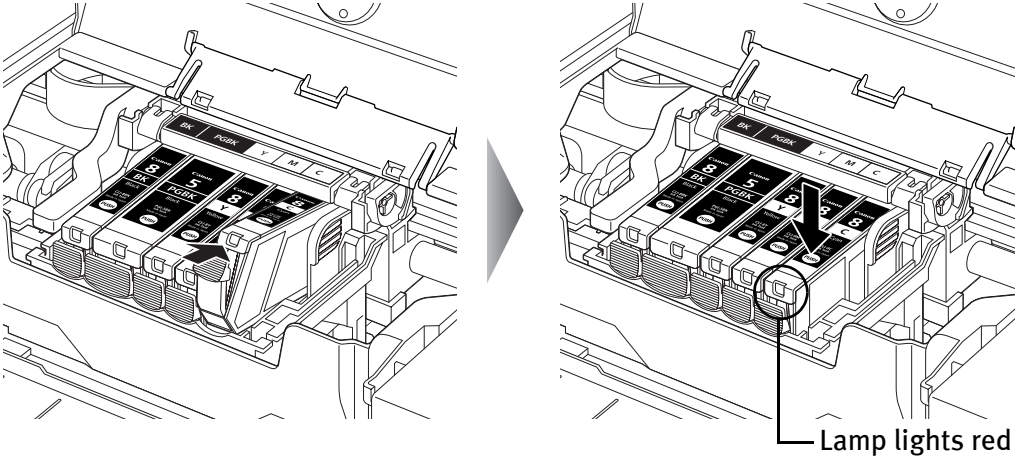

(1) Insert the ink tank into the Print Head.

(2) Press on the PUSH mark on the ink tank until the ink tank snaps firmly into place.

(3) Ensure that the ink tank lamp lights red.

Important Ensure that all the ink tanks are installed in the order directed by the label. The printer cannot be used unless all the ink tanks are installed.

6 Close the Inner Cover and the Top Cover.

The Print Head Holder moves to the right. The ink tank installation process is now complete.

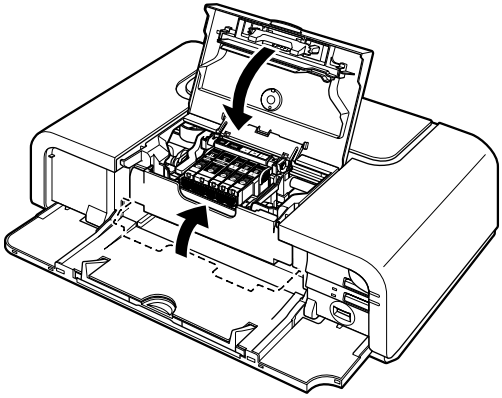

Note

- Ensure that the Inner Cover is closed. Printing will not occur if the Inner Cover is open.
- The **ALARM** lamp still flashes orange after the Top Cover is closed if an ink tank is not installed properly. Open the Top Cover and make sure that all the ink tanks are installed in the correct order directed on the label.
- To maintain optimal print quality, use an ink tank within six months of its first use.
- Once an ink tank has been used, do not remove it from the printer and leave it out in the open. This will cause the ink tank to dry out and the printer may not operate properly if it is reinstalled.
- Color ink consumption may occur even when black-and-white or grayscale printing is specified.
  Color ink is consumed in the head cleaning and deep cleaning, which are necessary to maintain the printer's capabilities.
- When you start printing after replacing the ink tank, the printer executes **Print Head Cleaning** automatically. Do not perform any other operations until the **Print Head Cleaning** finishes. The **POWER** lamp flashes green during cleaning.

When Printing Becomes Faint or Colors are Incorrect

When printing becomes faint or colors are incorrect, even if ink remains in the ink tanks, the Print Head nozzles are probably clogged. Follow the procedures below to clean the nozzles.

If the ruled lines are shifted after running the print head maintenance, align the Print Head.

Important **Before printing the nozzle check pattern or cleaning the Print Head, check the following;**

- Open the Top Cover and make sure that all the ink tanks click into place and then their lamps light red.

  If any one of the lamps is flashing, the associated ink tank is empty or running low. Replace the ink tank. See "Replacing Ink Tanks" on page 42.

  If an ink tank lamp is flashing even though ink remains in that ink tank, it is inserted in the wrong position. Make sure that the correct ink tank color is inserted in each position. See "Replacing an Ink Tank" on page 37.

  If the ink tank lamp is unlit, press the PUSH mark on the ink tank to fully insert it. Make sure that all packaging material is peeled off the ink tank. See "Replacing Ink Tanks" on page 42.

- Increase the **Print Quality** setting in the printer driver settings.
  See "Print Results Not Satisfactory or Contains Errors" on page 67.

Step 1

See "Printing the Nozzle Check Pattern" on page 47

If missing lines or white stripes appear

After print head cleaning, print the nozzle check pattern.

Step 2

See "Print Head Cleaning" on page 52

If the problem remains after performing print head cleaning twice

Step 3

See "Print Head Deep Cleaning" on page 56

Note If **Print Head Deep Cleaning** does not resolve the problem, the Print Head may be defective. Contact the Customer Care Center.

- **If the ruled lines are shifted**

Step 1

See "Aligning the Print Head" on page 60

Printing the Nozzle Check Pattern

Print the nozzle check pattern to determine whether the ink ejects properly from the Print Head nozzles. Use this function when printed results are blurred or the color is incorrect.

Note

- Ensure that the Inner Cover is closed.

Printing the Nozzle Check Pattern Without a Computer

- Nozzle check pattern printing can also be executed from the printer itself.
  1. With the printer on, load a sheet of Letter-sized plain paper in the Auto Sheet Feeder or Cassette.
  2. Press the Paper Feed Switch to select the paper source in which you loaded the paper.
  3. Hold down the **RESUME/CANCEL** button until the **POWER** lamp flashes green twice, and then release it immediately.

■ Printing the Nozzle Check Pattern

Windows

1 **With the printer on, load a sheet of Letter-sized plain paper in the Auto Sheet Feeder or Cassette.**

2 **Press the Paper Feed Switch to select the paper source in which you loaded the paper.**

3 **Open the printer properties dialog box.**

See **"Opening the Printer Properties Dialog Box Directly from the Start Menu"** on page 35.

4 Print the Nozzle Check Pattern.

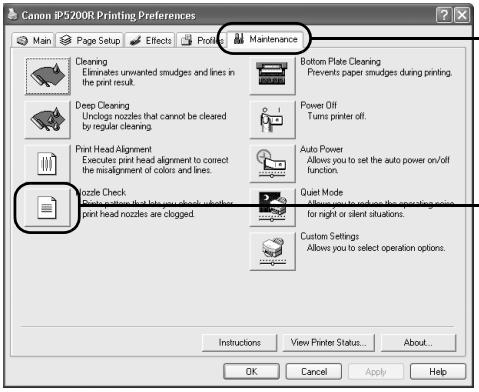

(1) Click the **Maintenance** tab.

(2) Click **Nozzle Check**.

(3) Read the message and click **Print Check Pattern**.

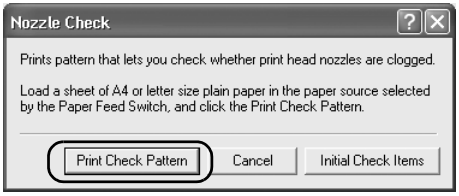

The nozzle check pattern will be printed.

Note Clicking **Initial Check Items** displays the items to be checked before printing the pattern.

5 Examine the pattern and take the appropriate action.

See **"Examining the Nozzle Check Pattern"** on page 50.

Macintosh

1 With the printer on, load a sheet of Letter-sized plain paper in the Auto Sheet Feeder or Cassette.

2 Press the Paper Feed Switch to select the paper source in which you loaded the paper.