WIRELESS DATA COMMUNICATION MODEM

FDL01TU

Wireless Modem with Serial Interface
Instruction Manual

Futaba Corporation
Industrial Radio Control

I Notice

This device complies with part 15 of the FCC rules. Operation is subject to the following two conditions: (1) This device may not cause harmful interference, and (2) this device must accept any interference received, including interference that may cause undesired operation.

This equipment has been tested and found to comply with the limits for a Class A digital device, pursuant to part 15 of the FCC Rules. These limits are designed to provide reasonable protection against harmful interference when the equipment is operated in a commercial environment. This equipment generates, uses, and can radiate radio frequency energy and, if not installed and used in accordance with the instruction manual, may cause harmful interference to radio communications. Operation of this equipment in a residential area is likely to cause harmful interference in which case the user will be required to correct the interference at his own expense.

Any unauthorized changes or modifications to this device not expressly approved by Futaba Corporation could void the user's authority to operate the device and possibly result in damage to the equipment and/or cause serious or fatal injuries to the operator or nearby personnel.

This device is intended to be installed and used in accordance with the instructions contained in this manual. Failure to comply with these instructions could void the user's authority to operate the device and possibly result in damage to the equipment and/or cause serious or fatal injuries to the operator or nearby personnel.

II Important Safety Information

The list of dangers, warnings and cautions in this section contain important information that will help ensure safe operation of the system. Please read carefully and understand all of these items. All installers, operators and maintenance personnel should read and understand this information before installation, use, or maintenance of the FDL01TU system.

The FDL01TU system by itself is not inherently dangerous. **HOWEVER, WHEN THE FDL01TU IS CONNECTED TO OTHER EQUIPMENT FOR THE PURPOSE OF CONTROL, SAFETY AND ALL POSSIBLE ASSOCIATED DANGERS MUST ALWAYS BE GIVEN THE UTMOST CONSIDERATION DURING SYSTEM INTEGRATION, DESIGN, INSTALLATION, AND USE.**

The FDL01TU system may be used in virtually unlimited applications. Many of these associated systems can, by themselves, pose a mechanical, electrical or other hazard to operators and other persons or equipment. To address all possible applications and associated safety hazards in this manual would be impossible. The warnings below and throughout this manual give information that will allow safe installation and use the modem system applications. If you have questions regarding the safety of your specific application, please contact the appropriate people for help. Your Futaba sales representative, representatives of the equipment being controlled, and the technical support staff at local branch of Futaba Corporation are among those who can provide assistance with your safety concerns.

The following warnings are included in the lists that follow but warrant repetition here:

In installations where the FDL01TU system is used to control motion or operation of potentially dangerous equipment, it is imperative for safety that all operators and installers be thoroughly trained in the normal function of that equipment before attempting to control it remotely with the FDL01TU system.

To help ensure safe operation of the equipment, the FDL01TU system must be connected so that it will operate in a fail-safe way. In other words, the equipment being controlled should stop or return to its safest state in the absence of a control signal or total loss of RF transmission from the FDL01TU system. Our system uses one of the most reliable methods available to transmit data using radio signals. Many factors can affect a radio signal that may block it or interfere enough to disrupt regular transmission. Because of this, equipment motion or dangerous electrical current, for example, that continues during a loss-of-signal condition could be very dangerous.

Four symbols are used in the margin of the following section and throughout the manual to indicate the level of hazard or information listed.

The symbols are defined as follows:

⚠ DANGER	Indicates a hazard that *will* cause severe personal injury, death, or substantial property damage if the warning is ignored.
⚠ WARNING	Indicates a hazard that *can* cause severe personal injury, death, or substantial property damage if the warning is ignored.
⚠ CAUTION	Indicates a hazard that will or can cause minor personal injury, or property damage if the warning is ignored.
NOTE	Indicates installation, operation, or maintenance information that is important but not hazard-related.

Please read the following safety information carefully. Some of these notices are duplicated throughout the manual, in areas of associated content, for your benefit.

II.I General Safety Hazards and Notes

⚠ WARNING

Improper installation and/or operation of the FDL01TU system can cause serious or fatal injuries to the operator or nearby persons and cause damage to the FDL01TU system, and any equipment it is used to control. Please read and understand this manual completely and the manual of all equipment being controlled before attempting to operate or install this system.

⚠ WARNING

Always keep this manual at a location readily accessible to anyone operating the system and related equipment. Ensure that all operators have read and understood this manual, especially all safety and operation procedures contained in it. Please refer to the section in this manual titled **How to Obtain Help** for the contact that can supply additional manuals or answers to questions not covered in this manual. If this product is passed on to a different user, be sure that this manual accompanies the product.

⚠ WARNING

Be certain that the installer of this equipment reads and understands the instruction manual of *the equipment that is being connecting to* before attempting this installation.

⚠ DANGER

The FDL01TU modem should **NOT** be used in a manner in which failure of the product or loss of the radio signal could cause damage

to the equipment being controlled, or to anything in the area in which such equipment is located. All integrated control systems should be designed for “fail-safe” operation so that a temporary or permanent loss of signal will not endanger any person, critical process, or equipment (refer to the beginning of the safety section for further explanation). The system design should ensure that the equipment being controlled will default to its safest state in the event of signal loss.

⚠CAUTION

The FDL01TU modem contains no user serviceable parts. If the unit requires service, contact your sales representative or local branch of Futaba Corporation per instructions the section titled **How To Obtain Help**. Do not disassemble or attempt to repair the FDL01TU yourself. Doing so could void your warranty and may void the user’s authority to operate the device.

⚠WARNING

Contact Futaba before using the FDL01TU modem in safety critical applications such as medical equipment, aircraft, hazardous materials handling, etc.

II.II Installation Safety Hazards and Notes

⚠CAUTION

When mounting the FDL01TU modem, use M2 (ISO) screws that project 2 to 3 mm into the modem. Screws that project further into the modem (3.5mm MAX) may permanently damage the internal components and/or cause the FDL01TU modem to malfunction.

⚠WARNING

Use only the proper regulated DC voltage supplied to the FDL01TU modem. Use of any other voltage may permanently damage the modem and/or cause the modem to malfunction and create a shock or fire hazard.

⚠WARNING

Be certain that all AC power outlets used the power adapters have been properly installed, grounded, and fused. An electrical shock hazard may exist if this unit is powered by a faulty power outlet or source. If such a situation is discovered, immediately discontinue use until the power source and outlet have been properly installed, grounded, and fused by an electrician or other authorized person.

⚠WARNING

Be sure to wire the power and serial connections correctly. Incorrect wiring can damage the system, cause it to malfunction and/or create a shock and fire hazard.

⚠WARNING

Ensure that the FDL01TU modem power and the power to the equipment to be controlled is turned off before connecting or disconnecting the cable between them. This will help prevent

accidental damage to the system and unexpected operation and/or injury.

⚠WARNING Be sure the FDL01TU modem power, the power to the equipment that is being connecting to it, and the DC power source are all turned off before wiring and connecting the power cable.

⚠WARNING Be sure that the supplied power is within the specified range (3.5 to 7.0 VDC). Voltages outside the specified range may damage the FDL01TU modem.

⚠WARNING Be sure that the power source has sufficient current capacity. Insufficient current may cause the unit to malfunction.

⚠WARNING Securely attach the antenna cable, and serial communication connector to the FDL01TU modem and equipment/power source to which it is connected. Failure to do so could cause an unexpected system failure.

II.III Antenna Installation Hazards and Notes

⚠WARNING Be sure to keep all systems and antennas clear of power lines. Permanent equipment damage and severe shock injury or death can occur if the system contacts power lines.

⚠WARNING This device has been designed to operate with an antenna having a maximum gain of 2.14 dB. Antenna having a higher gain is strictly prohibited for use with this device. The required antenna impedance is 50 ohms.
Contact Futaba before connecting any antenna not provided by Futaba specifically for the FDL01TU modem. Attaching any non-authorized antenna may be in violation of FCC regulations.

⚠CAUTION To reduce potential radio interference to other users, the antenna type and its gain should be so chosen that the equivalent isotropically radiated power (e.i.r.p.) is not more than that permitted for successful communication.

NOTE When using two antennas with a single FDL01TU modem for diversity reception, mount the antennas as far apart as possible (6 cm minimum). If the antennas are too close, the diversity advantage will not be achieved.

⚠WARNING

Before each use, verify that the antenna (and antenna cable, if used) is securely attached and in good condition. A loose antenna or cable may severely reduce the operating range of the system.

NOTE

When installing the FDL01TU modem in a mobile unit such as an Automated Guided Vehicle (AGV), Futaba recommends to use the diversity reception feature as a remedy for multipath fading problems. For diversity reception, install the two antennas as far apart as possible in order to gain maximum benefit (6 cm minimum).

NOTE

The FDL01TU operates at frequencies in the 2.4 GHz band. These frequencies are more directional than lower frequencies and are easily reflected. If there are metal structures nearby, the effective range may be shortened or the directional properties may be further narrowed. To help avoid this, mount the antenna as far away as possible from surrounding metallic structures.

NOTE

Multipath problems occur easily at frequencies in the 2.4 GHz band. When multipath problems are present, moving the antenna as little as 10 cm may result in improved communication or, conversely, worsened or complete loss of communication. Futaba recommends that the mounting position of the antenna be determined *after* testing and verifying optimal communication conditions. Negative multipath effects can also be overcome with antenna diversity. See p.8 **DIVERSITY ANTENNA SETUP** and the related register settings for more details regarding antenna diversity function.

⚠CAUTION

When installing multiple FDL01TU modem systems that will use different frequency groups in the same area, modem's antennas of different frequency groups must be mounted at least 6 feet (2 meters) apart. Failure to do so may severely reduce the modem operating range.

NOTE

Please contact Futaba for information about antenna separation when using the FDL01TU and other wireless products in the same area.

II.IV Environmental Safety Hazards and Notes

⚠WARNING

If the FDL01TU modem has been stored at a temperature beyond the specified operating temperature range for the system, it may not function properly. Allow it to return to normal temperatures before use. Refer to **APPENDIX A – TECHNICAL SPECIFICATIONS** for the actual operating temperature range.

⚠WARNING

The FDL01TU modem is a precision electronic device with a rugged design that is intended for industrial applications. However, do not install it where it will encounter excessive vibrations. In some cases, isolation mounts may be used to isolate the modem from the equipment's vibration. Excessive vibration can permanently damage the modem and/or cause it to malfunction.

⚠WARNING

Do not operate the FDL01TU modem in environments where it will be subjected to excessive moisture (such as rain or water spray), dust, oil, or other foreign matter (such as metal particles). Doing so may permanently damage the modem and/or cause it to malfunction. If it does become wet or contaminated, correct the situation, verify proper operation and have any problems corrected before using it to control other equipment. If necessary, the modem can be mounted inside a protective or waterproof enclosure. If the enclosure is metallic, the antenna must be mounted externally or the effective operating range will be severely limited.

⚠WARNING

The FDL01TU is designed for indoor use. When using it outdoors, the modem should be mounted in a waterproof enclosure and the ambient temperature range should be checked to insure that it is within the modem's specifications. Always use the modem within its specified environmental ranges.

II.V Other Notice

NOTE

Italicized gothic word used in this manual shows functional and technical term especially important for the FDL01TU modem.

Operational Safety Hazards and Notes

⚠WARNING

Before each use of the FDL01TU modem, ensure that the area where the equipment will be operated is clear of people or obstacles that may affect its safe operation.

⚠WARNING

Before each use of the FDL01TU modem, verify that both the equipment being controlled and the modem are in proper operating condition.

⚠CAUTION

When rewriting the FDL01TU modem's memory registers, do not turn the modem's power off until the modem returns a "P0" response. If the power is interrupted before a P0 response is returned, the memory contents may be lost or corrupted and the modem operation will be unpredictable. If the memory contents are lost or corrupted, they may be restored to original default settings by reinitializing them. (See p.25 **Memory Register Initialization** for more details.)

⚠WARNING

Do not attempt to operate remotely controlled equipment outside the communication range of the FDL01TU system. Doing so could cause loss of control of the equipment.

⚠WARNING

Without implementing proper serial communication flow control settings, the baud rate between the modem and its terminal equipment (wire linked) can exceed the wireless link data rate and cause the modem buffer to overflow. This can result in malfunction of the systems being controlled and/or data corruption. Ensure that the appropriate flow control settings are being used for your upper layer application protocol.

⚠CAUTION

Operation is subject to the following two conditions: (1) this device may not cause interference, and (2) this device must accept any interference, including interference that may cause undesired operation of the device.

III System Identification

For future reference, please take a moment to fill in the information below. This information will help us respond as quickly as possible should your FDL01TU modem ever need repair or replacement.

Model Name and Number: FDL01TU

Serial Number: _____

Date of Purchase: _____

Distributor Name: _____

Distributor Address: _____

Distributor Phone Number: _____

IV Limited Warranty

FUTABA WARRANTS ONLY THAT THE INDUSTRIAL RADIO CONTROL SYSTEM GOODS OR PRODUCTS FURNISHED HEREWITH SHALL BE FREE FROM DEFECTS IN MATERIAL AND WORKMANSHIP UNDER NORMAL CONDITIONS OF USE AND SERVICE FOR A PERIOD OF ONE (1) YEAR FROM THE DATE OF SALE TO THE PURCHASER WHO IS THE FIRST BUYER OF THE GOODS FOR USE OR CONSUMPTION AND NOT FOR RESALE OTHER THAN AS A COMPONENT OF ANOTHER PRODUCT MANUFACTURED FOR SALE BY SUCH PURCHASER ("CONSUMER"). FUTABA'S LIABILITY, WHETHER BASED ON BREACH OF WARRANTY OR NEGLIGENCE, SHALL BE LIMITED, AT FUTABA'S ELECTION, TO REPLACEMENT OR REPAIR OF ANY SUCH NONCONFORMING GOODS, F.O.B. FUTABA'S U.S.A. PLANT, OR, AT FUTABA'S ELECTION, CREDIT FOR THE NET PURCHASE PRICE OF SUCH GOODS. ALL CLAIMS HEREUNDER MUST BE MADE IN WRITING DURING THE WARRANTY PERIOD, AND FUTABA SHALL HAVE THE RIGHT PRIOR TO ANY RETURN OF GOODS TO INSPECT ANY GOODS CLAIMED TO BE NONCONFORMING, AND IN ANY EVENT RESERVES THE RIGHT TO REJECT CLAIMS NOT COVERED BY WARRANTY. THIS LIMITED WARRANTY CONSTITUTES FUTABA'S SOLE WARRANTY. **FUTABA MAKES NO OTHER WARRANTY OF ANY KIND, EXPRESS OR IMPLIED, AND EXPRESSLY DISCLAIMS ANY IMPLIED WARRANTY OF MERCHANTABILITY OR FITNESS FOR A PARTICULAR PURPOSE.** FUTABA'S WARRANTY SHALL NOT APPLY IF, AMONG OTHER LIMITATIONS CONTAINED HEREIN OR FURNISHED WITH THE PRODUCT, BUYER, OR CONSUMER, OR ANY USER OF THE PRODUCT (A) ALTERS SUCH PRODUCT, OR (B) REPLACES ANY PART OF SUCH PRODUCT WITH ANY PART OR PARTS NOT FURNISHED BY FUTABA FOR THAT PURPOSE, OR IF, AMONG SUCH OTHER LIMITATIONS, PRODUCT FAILS TO OPERATE PROPERLY OR IS DAMAGED DUE TO ATTACHMENTS OR COMPONENTS THAT ARE NOT FURNISHED BY FUTABA FOR USE WITH OR REPAIR OF THE PRODUCT UNLESS SUCH USE IS AUTHORIZED IN WRITING IN ADVANCE BY FUTABA.

THIS LIMITED WARRANTY EXTENDS ONLY TO THE CONSUMER AND IS NOT ASSIGNABLE OR TRANSFERABLE. This limited warranty shall not apply to fuses, lamps, batteries, or other items that are expendable by nature, unless otherwise expressly provided.

This limited warranty does not cover any defect or damage to any of the goods caused by or attributable to force, accident, misuse, abuse, faulty installation, improper maintenance, improper electrical current, failure to install or operate in accordance with Futaba's written instructions, repair or alteration by unauthorized persons, or leaking batteries. **THE GOODS ARE SENSITIVE ELECTRONIC DEVICES REQUIRING SPECIAL HANDLING, AND THIS LIMITED WARRANTY DOES NOT APPLY TO PRODUCTS NOT HANDLED IN ACCORDANCE WITH INSTRUCTIONS SET FORTH IN THE MANUAL.**

THIS LIMITED WARRANTY DOES NOT COVER INDUSTRIAL RADIO CONTROL PRODUCTS PURCHASED OR USED OUTSIDE OF THE UNITED STATES WITHOUT FUTABA'S PRIOR APPROVAL.

V Returns

Futaba's authorization must be obtained prior to return of any item for warranty or other repair or replacement or credit and will reflect Futaba's warranty service procedure. Consumer's warranty rights are governed by the terms of Futaba's Limited Warranty, as above described. Products returned for warranty repair or replacement or credit must be carefully and securely packed for return, preferably in the original carton or equivalent. The Consumer must also include in the carton a legible copy of the bill of sale or invoice which shows the date of sale and the original Buyer's and Consumer's names, and also a letter which gives the Consumer's return address and contact telephone number, the model and serial numbers of the product(s) returned, and a brief explanation of the problem or claimed defect. Any returned products that are replaced by Futaba shall become the property of Futaba. If after inspection Futaba determines the defect is not covered by its limited warranty, Futaba will notify Consumer of its determination and will not undertake any repairs or product replacement until Consumer agrees to pay for all necessary parts and materials, labor (to be charged at Futaba's standard repair rate then in effect), and other expenses including all shipping charges and insurance. Futaba reserves the right to retain possession of any product returned by Consumer because of defects not covered by Futaba's warranty until Futaba receives Consumer's agreement as above noted or, if Consumer wants the product returned without repair or replacement, Consumer reimburses Futaba for all shipping and handling charges incurred by Futaba. Issuance of credit for returned items shall be made at Futaba's unfettered discretion. Consumer will not be entitled to return defective goods for cash refunds. Consumer must inspect goods immediately and no rejection or revocation of acceptance shall be permitted more than ten (10) days after delivery to, or first use by, Consumer of the goods, whichever occurs first.

VI Patents – Copyrights – Trademarks – Proprietary Rights

If this product was manufactured according to designs or processes specified by Consumer, Consumer shall indemnify and save Futaba, its affiliates, officers, agents, and employees, harmless from any expense, loss, attorneys' fees, costs, damages, or liability which may be incurred as a result of actual or alleged infringement of patent, copyright, or trademark rights. Furnishing of these products does not convey a license, implied or otherwise, under any patent, copyright, or trademark right in which Futaba has an interest, nor does it convey rights to trade secrets or any other proprietary information of Futaba.

VII Limitation of Damages and Action

IN NO EVENT SHALL FUTABA BE LIABLE TO CONSUMER, OR ANY OTHER PERSON FOR ANY INCIDENTAL, CONSEQUENTIAL, OR SPECIAL DAMAGES RESULTING FROM THE USE OF OR INABILITY TO USE THIS PRODUCT, WHETHER ARISING FROM BREACH OF WARRANTY OR NEGLIGENCE OF FUTABA, OR OTHERWISE. Any action hereunder must be commenced within one (1) year of accrual of cause of action or be barred and forever waived. No modification or alteration of Futaba's Limited Warranty or any other provision of this paragraph or the above paragraphs shall result from Futaba's acknowledgment of any purchase order, shipment of goods, or other affirmative action by Futaba toward performance following receipt of any purchase order, shipping order, or other form containing provisions, terms, or conditions in addition to or in conflict or inconsistent with any such provisions.

TABLE OF CONTENTS

1 INTRODUCTION 1

1.1 Special Features 2
1.2 How To Obtain Help 3
1.3 Physical Description 4

2 SYSTEM INSTALLATION 5

2.1 Wireless Modem Installation 6
2.2 Communication Cable Connection 7
2.3 Antenna Connection 7
2.4 Other Installation Precautions 9

3 SYSTEM OPERATION 11

3.1 Data Transparent Mode 12
3.2 Packet Transmission Mode 13
3.3 Headerless stream Mode 16
3.4 Power Down Mode 17
3.5 Frequency Grouping 18

4 FUNCTION CONTROL METHODS 21

4.1 Interface 22
4.2 Serial Interface Setting 23
4.3 Terminal Software Setup for Memory Register Control 24
4.4 Memory Register Setting 24
4.5 Command Control 26

5 MEMORY REGISTER DESCRIPTION 27

5.1 Memory Register Description 28

6 COMMAND SET DESCRIPTION 43

6.1 Command Set Description 44

7 APPENDIX 63

7.1 Conversion Circuit 64
7.2 Specification of the Connectors 65
7.3 Specification 66
7.4 Dimensions 68

SECTION 1

INTRODUCTION

1.1 Special Features

The following list highlights some of the special features of the FDL01TU. For more complete system specifications please refer to p.66 **SPECIFICATIONS**.

- Approved under FCC Part 15.247 rules -- no special user license required
- Operating range greater than 1000 feet, line-of-sight -- configurable as a repeater for extended range of application service area
- 2.4 GHz Direct Sequence Spread Spectrum (DSSS) communication system provides unsurpassed immunity to interference and RF noise
- *Diversity transmitting / receiving function* is employed, which is practically invulnerable to multipath fading
- Fast switching Time-Division-Duplex (TDD) provides virtual full-duplex communication between terminal equipments at rates up to 230.4 kbps
- 76 user selectable frequencies allow up to 26 independent networks to operate simultaneously in the same area
- Single fixed frequency communication or multi-access communication (automatic selection of an vacant frequency from a defined group of frequencies) allows the user to select the best frequency use for the application
- Supports 1:1, 1:n, and n:m wireless network topology
- Serial communication interface allows direct connection to a micro controller chip. By converting its level by the external interface circuit, conformable to RS232C, RS422 and RS485
- Small size allows easy integration with many systems (1.97" x 1.18" x 0.31" / 50 x 30 x 8 mm)
- Supply voltage range is DC voltage in 3.5 to 7.0 V DC

1.2 How To Obtain Help

Please contact your local sales representative or local branch of Futaba Corporation at the address shown below for help with the following:

- Application information regarding the FDL01TU or other Futaba products
- Technical assistance or training
- Answers to safety questions and issues
- Additional manuals or other documentation
- Repair or service
- Comments regarding the product or this manual

Japan
Futaba Corporation
Radio Control Equipment Group
1080 Yabutsuka, Chosei,
Chiba, 299-4395 JAPAN
Tel: +81 (475) 32-6173, Fax: +81(475) 32-6179
Internet: www.futaba.co.jp

Europe
PENDING

When requesting repairs, please provide as much detail as possible regarding the failure and its cause or symptoms. Doing so will help our service department find the problem quickly, resulting in a shorter repair time.

⚠CAUTION

The FDL01TU modem contains no user serviceable parts. If the unit requires service, contact your sales representative or local branch of Futaba Corporation as per instructed in this section. Do not disassemble or attempt to repair the modem yourself. Doing so could void your warranty and may void the user's authority to operate the device.

1.3 Physical Description

Please review the following section and take a moment to familiarize yourself with the FDL01TU wireless modem.

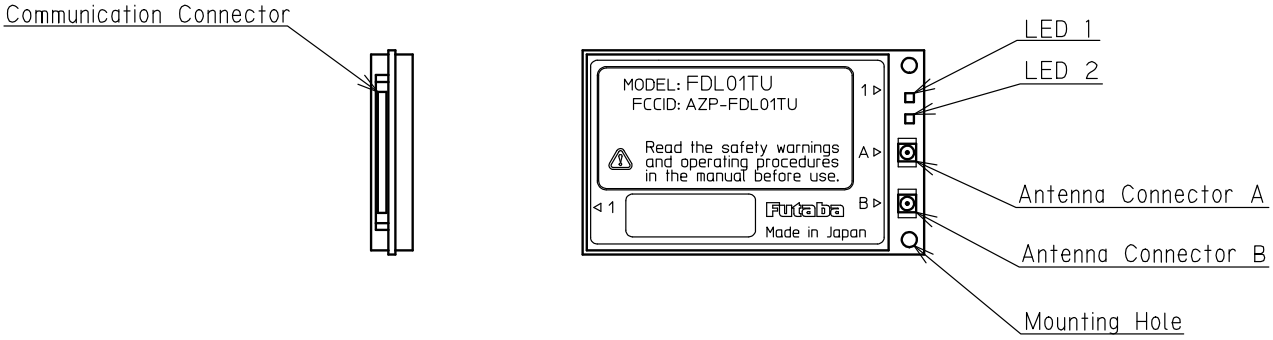

Figure 1–1: Upper View

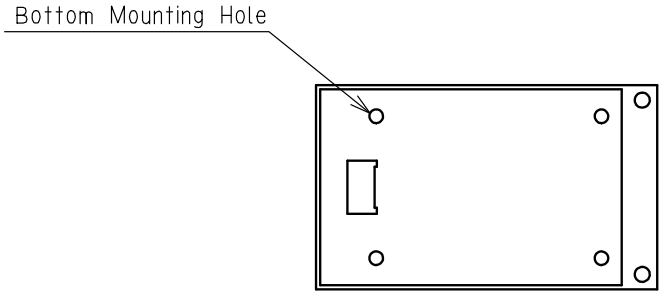

Figure 1–2: Bottom View

(1) Communication Connector
Used to connect to the DTE(Data Terminal Equipment) with interface cable. Also controlling functions such as *hardware reset* and *RS232C/RS485 selecting* pins are available. Signal is CMOS level.

(2) Antenna Connector A/B
Used to connect to antennas for transmit and receive functions.

(3) LEDs
Four bi-color LEDs indicate the states of the FDL01TU modem.

(4) Mounting Hole
Used to install a modem from the front surface. It is easy to install a modem, however, only two holes are available, it should be fixed by guide structure on the other side of the unit to prevent vibration problem.

(5) Bottom Mounting Hole
The four holes are used to install the modem. Please use this holes instead of above explained holes if tightened mounting is required.

SECTION 2

SYSTEM INSTALLATION

2.1 Wireless Modem Installation

2.1.1 Mounting Method 1

A method to mount the modem directly on a surface using the mounting holes at the side of the modem's print circuit board. When using this method, provide a guide on the opposite side, because two holes are not sufficient to securely mount the modem.

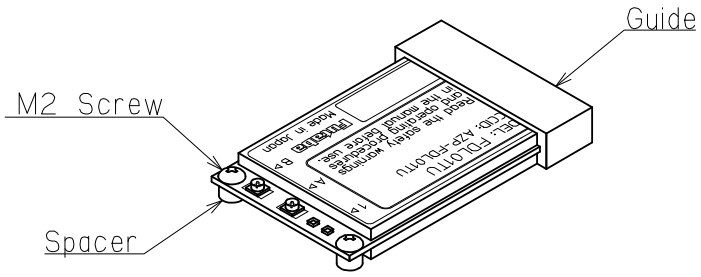

Figure 2–1: Mounting Method 1

2.1.2 Mounting Method 2

To mount the modem using the holes on a flat horizontal surface, which are 3.5mm deep for M2 screws. When using this method, use M2 screws which project the hole 2 to 3mm deep. The screw tightening torque is below 2.5kg cm. Mount the modem on a flat plane and be careful that there is no torsion applied. For the position of the mounting holes, see p.68 **DIMENSIONS**.

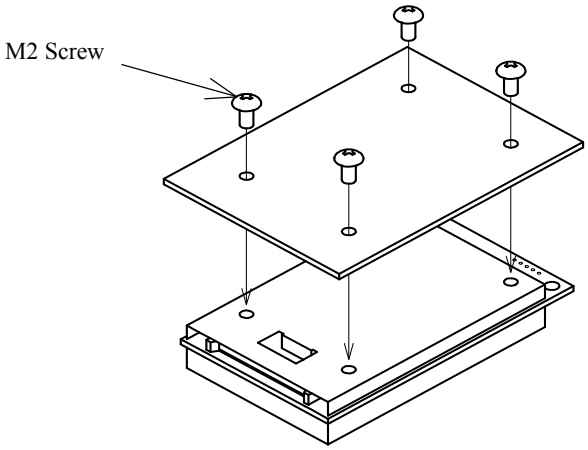

Figure 2–2: Mounting Method 2

⚠WARNING Be careful not to allow water, oil, dust and other foreign particles (especially metal particles) to enter inside, which may damage the unit.

⚠WARNING Since the FDL01TU modem is a precision electronic device, install it at a place free of excessive shock and vibration to prevent the unit from damage.

⚠WARNING The FDL01TU is designed to be used inside the room. In case of using it outdoor, be sure to use it within the extent limited by the environmental specification, and check the ambient temperature and the state of water-proof.

2.2 Communication Cable Connection

Use the serial communication cable prepared by Futaba to connect the FDL01TU modem to the external terminal equipment. For the connection of the modem, see p.22 **PIN ASSIGNMENT**.
The signal level of the FDL01TU is CMOS. If the interface of the equipment to be connected is RS232C or RS485, the level conversion circuit is required. For the example of the level conversion circuit, see p.64 **CONVERSION CIRCUIT**.

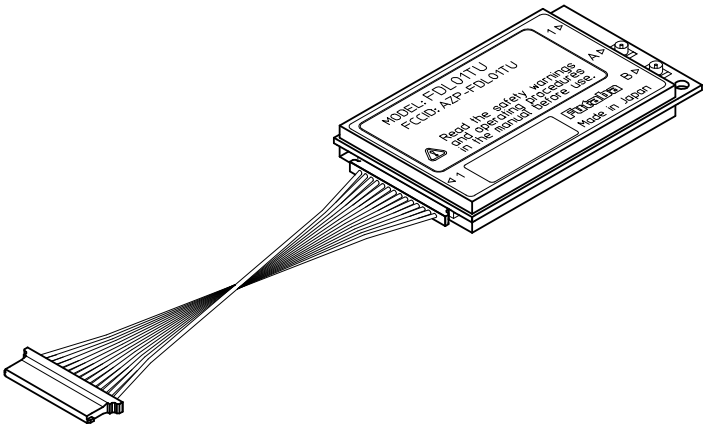

Figure 2–3: Connection of Communication Cable

⚠WARNING Ensure that the FDL01TU modem power and the power to the equipment to be controlled is turned off before connecting or disconnecting the cable between them. This will help prevent accidental damage to the system and unexpected operation and/or injury.

⚠CAUTION In addition to this manual, read the operation manual of a PC (Personal Computer) and PLC (Programmable Logic Controller) to be connected.

2.3 Antenna Connection

At least one antenna must be connected to Antenna Connector A on each FDL01TU modem in use. In the environment where multipath fading exists with reliable communication requirements, a second antenna can be installed to Antenna Connector B for the *diversity receive* function to improve reception performance.

2.3.1 Single Antenna Setup

Always use Antenna Connector A when installing a single antenna.
Refer to the figures below for details about the actual mounting and connecting methods.

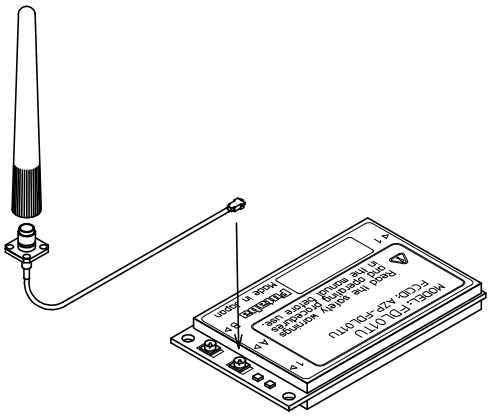

Figure 2–5: Connecting the Antenna

2.3.2 Diversity Antenna Setup

In certain situations, reception can be improved by using the integrated *antenna diversity* feature. This is accomplished by using two separate antennas and enabling the diversity function in REG19 (see p.27 **MEMORY REGISTER DESCRIPTION**).
Refer to the figures below for details about the actual mounting and connecting methods.

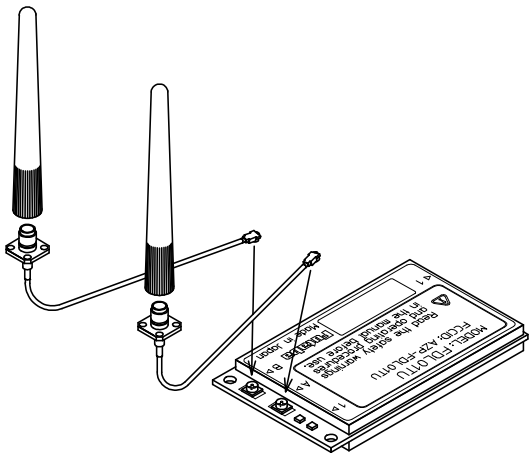

Figure 2–6: Connecting Two Antennas

⚠CAUTION

When using two antennas with a single modem for *diversity reception*, mount the antennas as far apart as possible (at least 6 cm). If the antennas are too close, the *diversity* advantage will not be achieved.

2.4 Other Installation Precautions

2.4.1 Modem Installation Precautions

⚠WARNING Securely attach the antenna cable, and *serial communication connector* to the FDL01TU modem and equipment/power source to which it is connected. Failure to not do so could cause an unexpected system failure.

⚠WARNING The FDL01TU modem is a precision electronic device. Its rugged design is intended for industrial applications. However, do not install it where it will encounter excessive vibrations. In some cases, isolation mounts may be used to isolate the modem from the equipment vibration. Excessive vibration could permanently damage the modem and/or cause it to malfunction.

⚠WARNING If the FDL01TU modem has been stored at a temperature beyond the specified operating temperature range for the system, it may not function properly. Allow it to return to normal temperatures before use. Refer to p.66 **SPECIFICATION** for the actual operating temperature range.

⚠WARNING Do not operate the FDL01TU modem in environments where it will be subjected to excessive moisture (such as rain or water spray), dust, oil or other foreign matter (such as metal particles). Doing so may permanently damage the modem and/or cause it to malfunction. If it does become wet or contaminated, correct the situation, verify proper operation and have any problems corrected before using it to control other equipment. If necessary, the modem can be mounted inside a protective or waterproof enclosure. If the enclosure is metallic, the antenna must be mounted externally or the effective operating range will be severely limited.

⚠WARNING The FDL01TU is designed for indoor use. When using it outdoors, the modem should be mounted in a waterproof enclosure and the ambient temperature range should be checked to insure that it is within the modem's specifications. Always use the modem within its specified environmental ranges.

2.4.2 Antenna Installation Precautions

⚠WARNING Before each use, verify that the antenna (and antenna cable, if used) is securely attached and in good condition. A loose antenna or cable may severely reduce the operating range of the system.

⚠WARNING

Avoid mounting the antenna near large metallic objects or inside metal enclosures. Such objects can severely reduce the operating range of the system.

NOTE

When installing the FDL01TU modem in a mobile unit such as an Automated Guided Vehicle (AGV), Futaba recommends using the *diversity receive function* as a remedy for to multipath fading problems. For *diversity reception*, install the two antennas as far apart as possible in order to gain maximum benefit (Actual recommendation is 30 cm, 6 cm at least).

⚠CAUTION

The FDL01TU operates at frequencies in the 2.4 GHz band. These frequencies are much directional than lower frequencies and are easily reflected. If there are metal structures nearby, the effective range may be shortened or the directional properties may be further narrowed. To help avoid this, mount the antenna as far away as possible from surrounding metallic structures.

⚠CAUTION

Multipath problems occur easily at 2.4 GHz frequencies. When multipath problems are present, moving the antenna as little as 10 cm may result in improved communication or, conversely, a further diminished or total loss of communication. Futaba recommends that the mounting position of the antenna be determined *after* testing and verifying optimal communication conditions. Negative multipath effects can also be overcome with *antenna diversity*. See p.8 **DIVERSITY ANTENNA SETUP** and the related register settings for more details regarding *antenna diversity*.

2.4.3 Multiple FDL Modems Installation Precautions

⚠CAUTION

When installing multiple FDL (series) modem systems that will use different *frequency groups* in the same area, modem's antennas of different *frequency groups* must be mounted at least 6 feet (2 meters) apart. Failure to do so may severely reduce the modem operating range.

NOTE

Please contact Futaba for information about antenna separation when using the FDL01TU and other wireless products in the same area.

SECTION 3

SYSTEM OPERATION

3.1 Data Transparent Mode

3.1.1 What Is Data Transparent Mode?

In *data transparent mode*, the FDL01TU modems are continuously connected in a 1:1 configuration. Full-duplex communication is simulated between the two terminals using a method in which each modem rapidly switches between transmitting and receiving (referred to as Time-Division-Duplex (TDD) transmission).

With the exception of FDL01TU modem commands, all data input from the sending terminal are transmitted to the receiving terminal. Using this mode, the user can simply replace a serial cable with a pair of FDL01TU modems and communicate without any special software or hardware requirements.

3.1.2 Time-Division-Duplex Transmission and ARQ Function

As noted above, when in *data transparent mode*, data packets are exchanged between terminals the modems rapidly switching between transmitting and receiving, simulating full-duplex communication.

Data input to the sending FDL01TU modem are assembled together with error detection bits and other control data, and then transmitted to the receiving modem. If an error is detected by the receiving modem, it will continue to request retransmission of the packet from the transmitting modem until it receives a valid packet. This is referred to as the Automatic Retransmission Request (ARQ) function. The ARQ function greatly enhances the reliability of the wireless connection because it ensures that the receiving FDL01TU modem will not pass corrupted data on to its terminal.

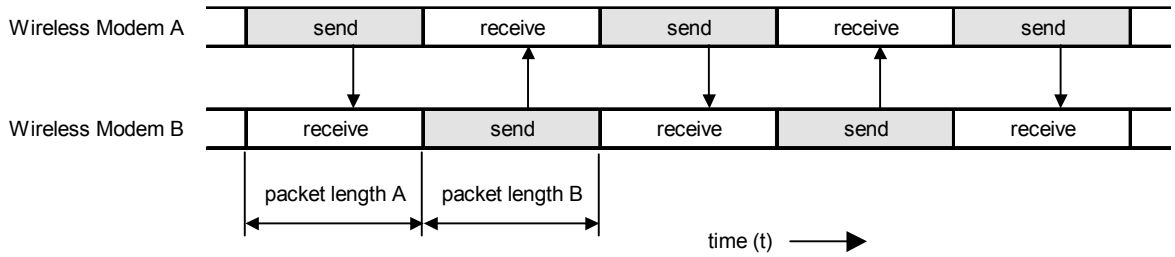

Figure 3–1: Send/Receive Timing Diagram

3.1.3 Connection Method

Link is connected and disconnected with the CON and DCN commands. Receiving modems can be shifted among many others by designating station addresses.

3.2 Packet Transmission Mode

Packet transmission mode operates as half-duplex communication and requires explicit commands to control the modem transmissions. Because this mode allows the addressing of different *destination* receiver modems by embedding the address in the data packets, it is best suited for 1:n and n:m topology applications.

In *packet transmission mode*, the FDL01TU modem normally waits in a *ready-to-receive state*.
When a transmission command is issued to the sender modem from its terminal equipment, the modem searches for a clear frequency channel and, when found, transmits the message to the intended *destination* receiver modem.

Packet transmission mode also allows expansion of the effective wireless communication range by using an additional FDL01TU modem configured as a *repeater*.

3.2.1 Packet Transmission Mode Protocol

In *packet transmission mode*, after a data packet is transmitted from the sender modem (station) to a *destination station*, the *destination station* acknowledges successful communication by returning an *acknowledgement (ACK) packet* to the sender modem. The sender modem waits for the *ACK packet* and when it is received, indicates that the transmission was successful. If it does not receive an *ACK packet*, it will continue to retransmit the data packet until it does receive an *ACK packet* or until the *retransmission count* (REG11 or RNO command setting) reaches the preset limit. If the sender modem receives an *ACK packet* anytime during the retransmission attempts, it returns a "*successive completion response"* (P0) code to its terminal equipment. If the modem does not receive an *ACK packet*, it returns a "*transmission failed*" (N1) code to its terminal equipment.

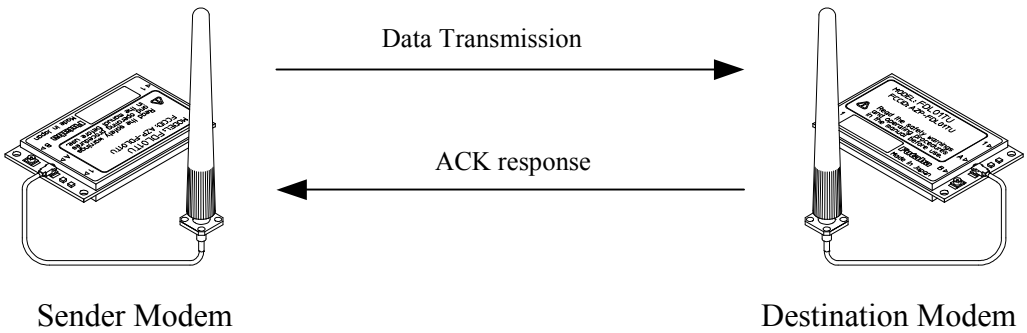

Figure 3–2: Packet Transmission and ACK response

3.2.2 Broadcast Transmission Protocol

Broadcast transmission (sending the same data to multiple modems simultaneously) is possible in *packet transmission mode* by setting 255 as the *destination address* (REG02). However, because *ACK packet* are not returned when executing the *broadcast transmission*, the sender modem does not receive confirmation of the "*successful reception*" of the transmitted data from any of the receiver modems.

In *broadcast transmission*, the sender modem transmit the data packet the number of times equal to the preset *retransmission count* (REG11 or RNO command setting) plus

one and then it outputs a *successive completion response* (P0) to its terminal equipment. When the remote receiver modems receive the transmitted data successfully, they output the data to their terminal equipments normally and do not return *ACK packet*. Once a valid data packet has been received correctly by a receiver modem, rest of data received during any subsequent retransmissions are discarded and not output to its terminal equipment.

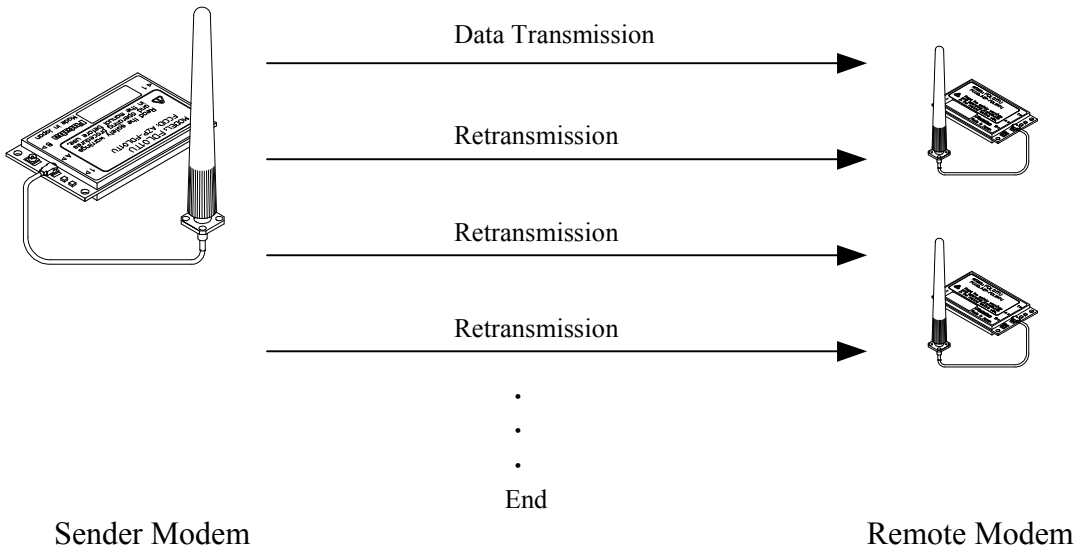

Figure 3–3: Broadcast Transmission

3.2.3 Transmit Command and Receive Header

Six transmit commands can be used in *packet transmission mode* . Both *text* and *binary* data can be sent *directly* from modem-to-modem or sent through a third FDL01TU modem configured as a *repeater*. The receiver modem automatically determines the transmitted data format and communication path from the information in the received packet header. Refer to the table below for a list of the transmit commands and the corresponding header component.

Transmit Command	Receive Header	Function
TXT	RXT	Text data transmission
TBN	RBN	Binary data transmission
TXR	RXR	Text data transmission via repeater
TBR	RBR	Binary data transmission via repeater
TX2	RX2	Text data via two repeaters
TB2	RB2	Binary data via two repeaters

Table 3–5: Transmit Commands and Receive Headers

The following list shows each command's syntax as issued at the sender terminal equipment and the response displayed at the receiver terminal equipment when the packet is received.

1. Direct Text Data Transmission

   transmit: @TXT [destination address]{source address}[message]
   receive: RXT [source address][message] CR/LF

2. Direct Binary Data Transmission

   transmit: @TBN[destination address]{source address}[message length][message] CR/LF
   receive: RBN [source address][message length][message] CR/LF

3. Text Data Transmission through Repeater

   transmit: @TXR [repeater address][destination address]{source address} [message] CR/LF
   receive: RXR [repeater address][source address][message] CR/LF

4. Binary Data Transmission through Repeater

   transmit: @TBR [repeater address][destination address]{source address} [message length][message] CR/LF
   receive: RBR [repeater address][source address][message length][message]CR/LF

where {source address} is optional, used in *RS485 mode* set by serial communication cable 12 pin.

The following list defines the parameters and symbols used in the commands above:

@	=	command header
CR/LF	=	carriage return + line feed
destination address	=	address of modem to receive the message (000 to 239)
source address	=	address of modem sent the message (000 to 239)
repeater address	=	address of the repeater modem (000 to 239)
message length	=	number of bytes in message
message	=	information data (255 bytes or less)

⚠CAUTION

In the *text data transmission*, the message is considered to be terminated when the CR/LF code appears in it. No data after that will be transmitted. When the CR/LF code contains in a message, use the *binary data transmission* command.

3.3 Headerless stream Mode

3.3.1 Operation in the headerless stream mode

The *headerless stream mode* is a specific transmission mode to set transmission data without the *packet header*, employing the protocol of the *packet transmission mode*. Parameters such as *receiver* or *repeater addresses* are set either by the *memory register* or by the command. A transmission data packet is automatically terminated by the specific character (*terminator*). *Command responses* (P1, P0) are not output.

In the *headerless stream mode*, since the transmission data is no longer to be issued as the transmission command. At the end to end of the wired link, existing upper layer application protocol can be used without awareness of the wireless link protocol.

This mode can communicate with the normal *packet transmission mode* interactively.

This mode cannot be used in the *RS485 mode*.

3.3.1.1 Format of the headerless stream mode

In the *headerless stream mode*, no *response* (P1, P0) following the transmission command is output. Instead of outputting the *receive header* or the CR/LF code, the specific characters (*terminator*) is output which separates data to a transmission packet at the sender end.

Since the transmission packet contains the sender's address, data format (*text or binary mode*) and the *repeater address*, the *headerless stream mode* is compatible with the normal *packet transmission mode* and the interactive communication can be performed between them.

The transmission and receiving formats in the *headerless stream mode* are as follows.

1. *Packet transmission mode* (for the reference below)
   Sender: @TXT002HELLO CR/LF -> Receiver: RXT001HELLO CR/LF
2. *Headerless stream mode* (when *terminator* is CR/LF)
   Sender: @HELLO CR/LF -> Receiver: HELLO CR/LF
3. When the receiver is in the *packet transmission mode* (text mode)
   Sender: @HELLO CR/LF -> Receiver: RXT001HELLO CR/LF
4. When the receiver is in the *packet transmission mode* (binary mode)
   Sender: @HELLO CR/LF -> Receiver: RBN001HELLO CR/LF CR/LF
5. When sender is in the *packet transmission mode*
   Sender: @TXT002HELLO CR/LF -> Receiver: HELLO

NOTE

When the receiver is in the *packet transmission mode*, be careful about the terminator. For details, refer to REG23 of p.27 **MEMORY REGISTER DESCRIPTION**.

NOTE

The difference between the *text mode* and the *binary mode* does not matter in the *headerless stream mode*.

3.3.1.2 Commands for the headerless packet mode

The same command as used in the *packet transmission mode* can be used, but the following commands which attempted transmission cannot be used.

TXT, TXR, TBN, TBR, RPT, RTY.

3.3.1.3 Repeater in the headerless packet mode

The *repeater* also can be used in the *headerless stream mode*. The *repeater address* is set with the *memory register* or the PAS command. The *repeater* itself no needs to be in the *headerless stream mode*.
Set REG18:bit 5 whether the *repeater* is used or not. The address of the *repeater* is set using REG08 and REG09 or PAS command.

3.4 Power Down Mode

The FDL01TU has three power down modes. Select the mode according to the power supply operating conditions such as battery powered application.

(1) Active Mode
This mode is not the power down mode but always capable of transmitting and receiving data. The modem is in the active mode when the power is turned on.
The current consumption is 110 mA maximum in this mode.

(2) RF Block Power Down Mode
This mode shuts down the power supply of the RF circuit block, where only the control (logic) circuit is activating. Since the control circuit is in operation, the setting of *memory registers* are retained. When the modem returns to the *Active mode*, it can continue its operation since the register value is retained. Furthermore, functions such as referencing and setting memory registers can be used in this mode.
This mode is invoked by the following commands.

ROF command:	to become the *RF block power down mode*
RON command:	to return to the *Active mode*

The current consumption is about 35 mA in this mode.

3.5 Frequency Grouping

3.5.1 Frequency Allocation

The FDL01TU can operate on 76 available frequencies between 2403 MHz and 2480 MHz with 1 MHz separation between each frequency. See the table below for the exact frequency assignments.

Freq.No.	Freq.(MHz)	Freq.No.	Freq.(MHz)
0	2403.328	45	2449.408
1	2404.352	46	2450.432
2	2405.376	47	2451.456
3	2406.400	48	2452.480
4	2407.424	49	2453.504
5	2408.448	50	2454.528
6	2409.472	51	2455.552
7	2410.496	52	2456.576
8	2411.520	53	2457.600
9	2412.544	54	2458.624
10	2413.568	55	2459.648
11	2414.592	56	2460.672
12	2415.616	57	2461.696
13	2416.640	58	2462.720
14	2417.664	59	2463.744
15	2418.688	60	2464.768
16	2419.712	61	2465.792
17	2420.736	62	2466.816
18	2421.760	63	2467.840
19	2422.784	64	2468.864
20	2423.808	65	2469.888
21	2424.832	66	2470.912
22	2425.856	67	2471.936
23	2426.880	68	2472.960
24	2427.904	69	2473.984
25	2428.928	70	2475.008
26	2429.952	71	2476.032
27	2430.976	72	2477.056
28	2432.000	73	2478.080
29	2433.024	74	2479.104
30	2434.048	75	2480.128
31	2435.072		
32	2436.096		
33	2437.120		
34	2438.144		
35	2439.168		
36	2440.192		
37	2441.216		
38	2442.240		
39	2443.264		
40	2444.288		
41	2445.312		
42	2446.336		
43	2447.360		
44	2448.384		

3.5.2 Frequency Group Operation

The FDL01TU can operate on a *fixed frequency* or on any frequency in a set of *frequency group*.

Multiple FDL01TU systems can be use different *frequency groups* and operate in the same area without mutual interference between the systems. When the RF environment is relatively clean, wireless channel links can be made on a fixed, clear frequency (no interference) by using *Grouping Method A*. In less than ideal RF environments, it is better to use multiple frequencies method in the *frequency group* (*Grouping Method B* through G, *multi-Access function*). Since the modem searches clear frequency in the group, it overcomes multipath fading and interference problems and establishes wireless communications.

On the down side, wireless link establishment delays will become longer when using the *frequency group function* (*multi-access function*) because the additional time is required for searching the channels in the group with transmitting and receiving the packet on the both end of the modem. The average connection delay will increase and the number of systems that can operate independently in the same area will decrease as the number of frequencies per group increases. Select the best *grouping method* for your application.

3.5.3 Grouping Methods

The *frequency grouping method* and *group number* are set using *memory register* REG06.

Method	Group Numbers	Frequencies per Group
A	0 to 75	1
B	0 to 37	2
C	0 to 24	3
D	0 to 18	4
E	0 to 11	6
F	0 to 8	8
G	0 to 5	12

Table 3–7: Frequency Grouping Methods and Group Numbers

SECTION 4

FUNCTION CONTROL METHODS

4.1 Interface

4.1.1 Pin Assignment

The figure below shows the pin location of the *serial communication connector*, following the DCE (Data Communication Equipment) specification.

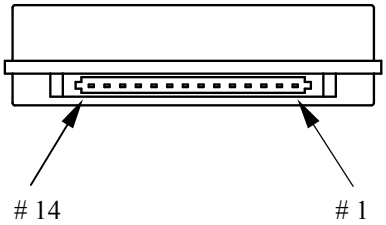

Figure 4–1: Serial Communication Connector Location

Pin	Name	Abbreviation	I/O	Function
1	Carrier Detect Out	DCDO	output	carrier detect output
2	Receive Data	RxD	output	received data output
3	Transmit Data	TxD	input	transmit data input
4	Data Terminal Ready	DTR	input	terminal ready
5	Signal Ground	GND	–	signal ground
6	Data Set Ready	DSR	output	modem ready
7	Request To Send	RTS	input	receive stop/resume request
8	Clear To Send	CTS	output	transmit stop/resume request
9	Carrier Detect In	DCDI	input	ring indicator input
10	Power Supply	VCC	–	2.7V to 3.3V DC
11	Modem Shutdown	POWER_ON	input	Power On control
12	RS485 Enable	485ENB	in/out	RS485bus Tx Enable at 485mode
13	Load Default Parameter	/INIT	input	Load default parameter when low
14	Reserved	Reserved	–	Reserved

Table 4–1: Pin Descriptions

1. The *serial communication connector*'s pin of the modem is defined as the DCE specification, where transmission indicates input and reception indicates output.
2. Pin 12 is for tri-state control for RS485 driver (CMOS - RS485 level converter) which will be externally mounted. When the power is turned on or reset, this pin is configured as an input pin to read the operation mode in the interface. When it is pulled down, the operation becomes the *RS485 mode*, and when it is pulled up (or leave open) the operation becomes the *RS232C mode*. Since this pin becomes to configure the output pin after reading the operation mode at the initialize state, never connect it directly to VCC or GND. This pin is internally pulled up with 470 k ohm.
3. Pin 13 is internally pulled up with 100 k ohm.
4. The input pin tolerates 5 V input (5 V tolerant specification). When the user's system is of 5 V, it is possible to interface with a such system.

5. Pin 11 can be used as the *hardware reset*. Since the input pin is at high impedance, never fail to tie the input level.
6. It is no problem if Pins 12, 13 and 14 are leaved open.
7. Since the interface is CMOS structure circuit, it is recommended to take a remedy against ESD problem (e.g. surge absorber; VRD series, made by Ishizuka Denki).

4.2 Serial Interface Setting

For connecting the FDL01TU modem with an external terminal equipment, RS232C is appropriate for 1 to 1 topology. And set the *RS485 mode* to make RS485 multi-dropping topology for multiple equipment connection. Interface configuration can be made with Pin 12 (/RS485ENB) of the *serial communication connector*.
To configure the *RS485 mode*, pull down Pin 12 with 10k ohm register. In this case, do NOT connect this pin DIRECTLY to the GND. This is because in *RS485 mode*, this pin will be as an output pin, after the initialization completes, to control the output buffer of the RS485 driver IC chip. As for the RS232C interface, no connection is required because it is pulled up inside.
Since the interface level of the FDL01TU modem is CMOS, the level conversion circuit must be provided outside for connecting it with the RS232C or RS485 interface. For an example of the level conversion circuit, see p.64 **CONVERSION CIRCUIT**.

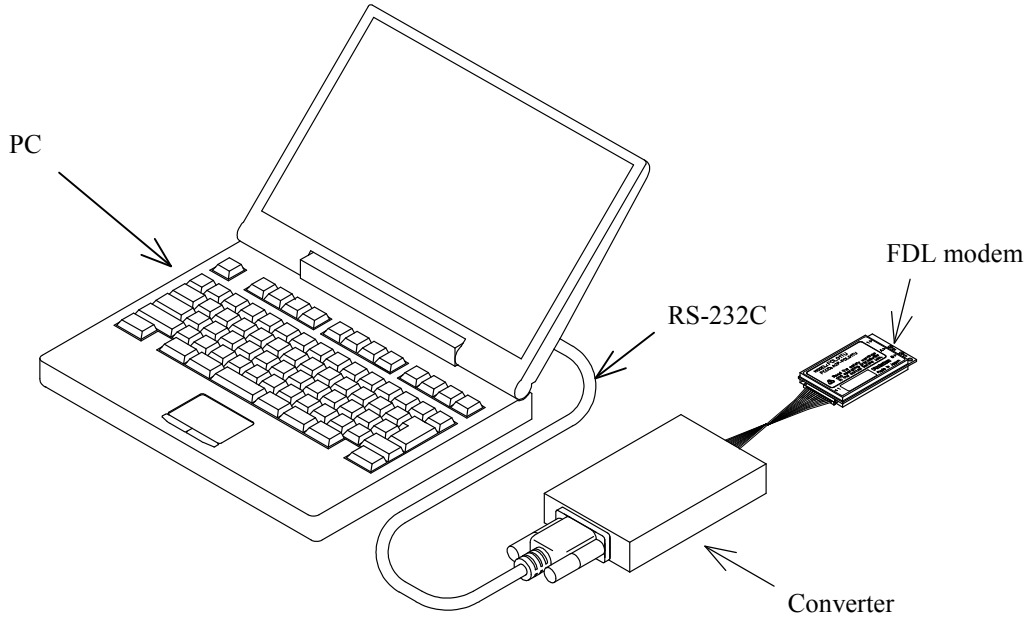

Figure 4–1: Connection Example to PC

4.3 Terminal Software Setup for Memory Register Control

Communication or terminal software is necessary to set the *memory registers*. Nearly any PC communication software can be used. Launch the communication software and set the terminal's communication parameters as shown below. Refer to your specific communication software instructions how to set these parameters.

bit rate:	9600 bps
data length:	8 bits
stop bits:	1 bit
parity bit:	none
flow control:	none
local echo:	yes
terminator:	carriage return + line feed

4.4 Memory Register Setting

Memory registers set the operation mode and communication parameters of the modem and retain them in memory. All of the settings of the modem are made by these *memory registers*.
Since the *memory register* is based on rewritable non volatile memories, these memories can be readily rewritten by external terminal equipment such as PC and their contents will be kept even after the power is turned off. This non volatile memory can be rewritten about 1 million times.

4.4.1 Memory Register Referencing and Setting

Memory registers are referenced and set with the REG command. (For more information, refer to REG section at p.43 **COMMAND SET DESCRIPTION**)

Example procedure:

1. To view the current value of register 00, enter: @REG00 CR/LF
2. Modem responds with 00H CR/LF (REG00 is assumed to be 00H in this case and varies in each setting case)
3. To set register REG00 to 0FH, enter: @REG00:0FH CR/LF
4. Modem responds with "P0" CR/LF
5. Enter "@RST CR/LF" or cycle the modem power, to activate new values

@ = command header (specify following characters are command)

CR/LF = Terminator (carriage return + line feed)

⚠CAUTION

When rewriting the modem's *memory registers*, do not turn the modem's power off until the modem returns "P0" *response*. If the power is interrupted before "P0" is returned, the memory contents may be lost or corrupted and the modem operation will be unpredictable.

⚠CAUTION

If the memory contents are lost or corrupted, they can be restored to original default settings by reinitializing them. (See the section below titled p.25 **MEMORY REGISTER INITIALIZATION**)

NOTE

Input character arrays of commands quickly and sequentially.
Too slow input (taking more than 5 seconds in the initial setting) results in *command error*.

4.4.2 Memory Register Initialization

The *memory registers* can be restored to the *factory default* values at any time by using one of the following two methods.

1) Memory Register Initialization by hardware:

Use either methods stated below, in which the modem attempts to read Pin 13 (/DefParam) of the *serial communication connector* at the startup and starts initializing the *memory registers* when it is "L".

Method 1. Set "L" level to Pin 13 (/INIT) of the *serial communication connector* with the power turned off. When the power is re-supplied, the *memory registers* are initialized and the modem starts operation in the *factory default* state.

Method 2. Set "L" level to Pin 13 (/INIT) of the *serial communication connector* while the power turned on. In this state, force "L" to Pin 11 (POWER ON) of the *serial communication connector* more than 1ms, then return the level to "H". The modem once becomes the *Shutdown mode* and returns to *Active mode*. Since this sequence is the same as the *reset*, the *memory registers* are initialized and the modem starts operation in the *factory default* state.

2) Memory Register Initialization by Command:

1. With the modem power is on and the communication software running, enter "@INI CR/LF " at the terminal prompt.
2. The modem responds with "P0" *response* and immediately begins to operate using the initialized *factory default* state.

⚠CAUTION

While initializing the *memory registers*, do not turn the modem's power off. It take about 1 sec. to initialize the *memory registers*.

4.5 Command Control

Some FDL01TU parameters can be changed by issuing commands from the terminal equipment. Various applications can be supported with the flexibility that command control offers.

Command Entry

- When a command is issued to the modem from the terminal equipment, a *command header* (one byte character) should be used the modem to acknowledge the command from ordinary data. The *command header* is initially set to "@" (40H) but can be changed to another character by changing the value stored in the *memory register* REG10.

- Commands must use all upper case letters (A to Z). The modem does not recognize lower case letters (a to z) in commands.

- A two byte terminator (carriage return (0DH) + line feed (0AH)) is used to terminate a command. "CR/LF" shows the terminator in this manual. PC can send this two byte character with pressing ENTER key once using a communication software. But some setting is necessary in the software.

- The modem immediately executes a command once it's recognized. If the command requires a *response*, the modem returns the *response* to the terminal equipment when its internal processing is completed.

The following is an example of a command entry and *response*:

@BCL CR/LF :command issued from the terminal equipment
P0 CR/LF : successive completion *response* is returned

SECTION

5 MEMORY REGISTER DESCRIPTION

5.1 Memory Register Description

The FDL01TU modem contains 28 *memory registers* which are used to control and store communication parameters and operation mode settings. After rewriting new register settings, the power must be cycled, a hardware reset asserted, or a software RST command is issued to validate the new settings.

The following table briefly lists each register, register function and default value:

Register	Function	Default Value	Meaning
REG00	Local Station Address	000	address 0
REG01	Local Station Group Address	240	address 240
REG02	Destination Address	000	address 0
REG03	Reserved	F0H	F0H
REG04	ID Code 1	00H	address 0
REG05	ID Code 2	00H	address 0
REG06	Frequency Group	C00	see text
REG07	Packet Interval	05H	5 ms
REG08	Repeater1 Address	A00	not use
REG09	Repeater2 Address	A00	not use
REG10	Command Header	40H	character @
REG11	Retransmission Count	32H	50 count
REG12	Roaming Threshold	50H	-80dBm
REG13	Buufer Data Timeout	1EH	30 s
REG14	Command Input Timeoutl	32H	5 s
REG15	Command Recognition Interval	00H	0 s
REG16	Terminator 1	0DH	CR
REG17	Terminator 2	0AH	LF
REG18	Communication Setting 1	8CH	see text
REG19	Communication Setting 2	00H	see text
REG20	Serial Interface Setting 1	05H	see text
REG21	Serial Interface Setting 2	09H	see text
REG22	Serial Interface Setting 3	00H	see text
REG23	Serial Interface Setting 4	00H	see text
REG24	Miscellaneous Settings	C0H	see text
REG25	Miscellaneous Settings	40H	see text
REG26	Data Input Timeout	00H	not use
REG27	Reserved	00H	-

Table 5–1: Memory Registers

Suffix ‘H’ of each default value denotes HEX radix expression in the value.

REG00: Local Station Address [default value: 000]

- Sets the *local station address*. Valid values are 000 to 999.
- This value is inserted in the "*source address*" field in the transmitted packet header.
- If the *address check function* is enabled (REG18) in the receiving modem, the modem can receive the packet which header contains *destination address* information identical to REG00.

REG01: Local Station Group Address [default value: 240]

- Sets the *local station global address* of the modem. Valid values are 240 to 254.
- When plural modems are connected by RS485 multi-dropping topology, commands can be issued to multiple modems simultaneously by setting all connected modems to the *same group address*. This is the *group addressing.*
- This *group addressing* allows to handle multiple multi-dropped modems as if they were one modem.

REG02: Destination Address [default value: 000]

- This address is used in the *data transpalent mode* and *headerless stream mode*.
- Valid values are 000 to A23(1023).

REG03: Reserved [default value: F0H]

- The FDL01TU does not use this register. Keep the default value as it is.

REG04: ID Code 1 [default value: 00H]

- Used with ID code 2 (REG05), set the ID code. Valid values are 000 to 255. Together with ID code 2, up to 65535 ID codes can be set.
- The ID code identifies the group of the modems works in the same group. The ID code is used to prevent erroneous connection with other systems and for communication security.
- Before transmission, *radio data packets* are scrambled using a pseudo-random data sequence generated with this ID code as the seed. During reception, the original data is restored by de-scrambling it with the pseudo-random data sequence. The modems with different ID codes cannot communicate with each other.

REG05: ID Code 2 [default value: 00H]

- Used with ID code 1 (REG04), set the ID code. Valid values are 000 to 255. Together with ID code 1, up to 65535 ID codes can be set.
- In case plural modems are used as a single system, always set the same ID code for all modems and *repeaters*.

REG06: Frequency Group [default value:C00]

- Refer to p.18 **FREQUENCY GROUPING** in Section 3, for a detailed description of the frequency operation modes.

Method	Group Numbers	Frequencies per Group
A	0 to 75	1
B	0 to 37	2
C	0 to 24	3
D	0 to 18	4
E	0 to 11	6
F	0 to 8	8
G	0 to 5	12

Table 5–2: Grouping of Frequency

REG07: RS485 Packet Interval [default value: 05H]

- In the *packet transmission mode* with the *RS485 mode* is used, sets the *interval* between response and/or received data which output from the modem to RS485 line.
- Be able to set 0 to 254 ms at increment of 1 ms. 255ms is not allowed. The default value is 5 ms.
- Set this *interval* to a larger value than the *receiving interval* set by REG14.
- Suitable setting of this *interval* avoids the data collision possibility of RS485 line.

REG08: Repeater 1 Address [default value: A00]

- When a *repeater* is used, set the *repeater1 address* to pass through.

REG09: Repeater 2 Address [default value: A00]

- When second *repeater* is used, set the *repeater2 address* to pass through.

REG10: Command Header [default value: 40H]

- Sets the character that identifies the start of a command.
- The default is character "@" (40H).
- When this character is input from the terminal equipment after no character is received for the *command recognition interval* (REG15) or longer, subsequent input character is recognized as a command for the modem.

REG11: Retransmission Count [default value: 32H]

- Sets the maximum *number of packet retransmission* attempts. Valid values are 000 to 255.
- When retransmission exceeds the *retransmission count* (*retransmission count* plus one), the modem outputs an *error response* to the terminal equipment.

REG12: Roaming Threshold [default value: 50H]

- At the time to set the *frequency roaming* (REG19:bit 2 is 1), set the *receiving strength threshold of the radio beacon* which starts scanning frequency.
- Set the value of the desired *radio beacon strength threshold* represented in dBm excluding the minus sign, e.g., set to "080" to search the next master station when the *radio beacon strength* becomes below –80 dBm.

REG13: Buffer Data Timeout [default value: 1EH]

- Valid values are 000 to 255, representing seconds in 1 s increments.

REG14: Command Input Timeout [default value: 32H]

- Sets the character *input timeout interval for command input*. It is used as the *timeout* between the *command header* and the character following it and between each character of the command.
- At the timeout, the modem operation transits from *command-input-state* to *data-wait-state*.
- Valid values are 000 to 255, representing tenths of seconds in 0.1 second increments. (Set an integer value equal to ten times the number of seconds desired.)
- A setting of 000 disables this *timeout function*

REG15: Command Recognition Interval [default value: 00H]

- When a message data contains a *command header* character (in case of binary data or data in two-byte Chinese characters), data following the *command header* character will be interpreted as a command, the message does not transmit properly.
- Sets the necessary vacant duration *time interval* to discriminate between ordinary data character and a *command header* character. Input a command after a longer interval than *time interval* setting.
- Valid values are 0.1 to 25.4 sec., representing tenths of seconds in 0.1 second increments. (Set an integer value equal to ten times the number of seconds desired.)
- When set to 000, the *command header* is recognized at any time, and when set to 255, all *command header* character are ignored.

REG16: Terminator 1 [default value: 0DH]

- Set an arbitrary 1 byte *terminator*. In case of a *2-byte terminator*, set the first byte character of the *terminator*.

REG17: Terminator 2 [default value: 0AH]

- Set another arbitrary 1 byte *terminator*. In case of a *2-byte terminator*, set the last character of the *terminator* .

REG18: Communication Setting 1 [default value: 8CH]

Bits 7 – 6: Protocol

bit 7	bit 6	Setting
0	0	Data transpalent mode
0	1	Reserved
1	0	Packet transmission mode
1	1	Headerless stream mode

Table 5–7: Protocol

Bits 5: Reserved

- The FDL01TU does not use this register. Keep the default value as it is.

Bit 4 Transmission format

0	transmit in the text form (default value)
1	transmit in the binary form

Table 7–4 Transmission format

- Selects the *transmission format*. When data are transmitted to the *destination station* which is set to the normal *packet transmission mode*, output text format (RXT, RBN) from the receiver modem (*destination station*) differs depend on this setting.
- This setting does not effect in the receiver modem set as *headerless stream mode*.

Bits 3 – 2 Terminator Setting

bit 3	bit 2	setting
0	0	two kinds of arbitrary 1 byte code (REG16, REG17)
0	1	arbitrary 1 byte code (REG16) ＋ a wild card (any character)
1	0	arbitrary 2 byte code (REG16 + REG17)
1	1	carriage return (CR) ＋ line feed (LF) (default value)

Table 7–5 Terminator setting

- Sets the *terminator* to identify the breakpoint of a packet. The modem transmits data considering this character as the breakpoint of a packet.
- In case of using an arbitrary terminator, set it to REG16 and 17.

Bit 1: Source address check

0	Inhibit source address checking (default value)
1	Activate source address checking

Table 5–4: Source Address Check Settings

- When the *source address checking* is active and the *source address* in the received *packet header* does not match the *destination address setting* (REG02), the data is discarded (data cannot be received).

Bit 0: Destination address check

0	Inhibit destination address checking on receipt (default)
1	Activate destination address checking on receipt

Table 5–5: Destination address check

- When the *destination address checking* is active and the *destination address* in the received *packet header* does not match the received modem's *local station address* (REG00), the data is discarded (data cannot be received).

REG19: Communication Setting 2 [default value: 00H]

Bit 7: Reserved

- The FDL01TU does not use this register. Keep the default value as it is.

Bit 6: Diversity Reception

0	Disable diversity reception (default value)
1	Enable diversity reception

Table 5–6: Diversity Reception Settings

- Enable/disable *diversity reception*.
- To enable *diversity reception*, set this bit to 1.
- Enabling *diversity reception* with only one antenna connected may *degrade* the reception performance.

Bit 5: Broadcast Transmission Reception

0	Enable broadcast transmission reception (default value)
1	Disable broadcast transmission reception

Table 5–7: Broadcast Reception Settings

- Enable/disable reception of *broadcast transmission* in *packet transmission mode* (Mode 3 and 5).

Bit 4: Antenna selection

0	Antenna is fixed to A (default value)
1	Antenna is fixed to B

Table 5–8: Antenna Selection

- At the *non-diversity reception*, decide the antenna terminal.

Bit 3: Extended reception

0	Disable extended reception (default value)
1	Enable extended reception

Table 5–9: Extended reception

- *Contention type communication* in *packet transmission mode* (including the *headerless stream mode*) may cause repetitive retransmission when two modems are in transmission state in identical timing. This results in the decrease of response rate or the transmission failure.
- This *extend reception function* solves such problems as above. The data packet received during *carrier sensing* are received first by interrupting the on-going transmission operation.

Bit 2: Receiving frequency change

0	Regularly change frequency within a group while waiting (default value)
1	Fix the frequency to wait while data can be regularly received.

Table 5–10: Receiving frequency change

- Set the changing method of receiving frequency in *packet transmission mode*. Sets *roaming function* with combining bit 1.

Bit 1: Beacon transmission

0	No transmission until transmission command is requested (default)
1	Enable regular beacon transmission.

Table 5–11: Beacon Transmission

- Enable or disenable *beacon transmission* in *packet transmission mode*.
- Set *roaming function* with combining bit 2.

Bit 0: Reserved

- The FDL01TU does not use this register. Keep the default value as it is.

REG20: Serial Interface Setting 1 [default value: 05H]

Bit 7: Data Length

0	8 bit data bytes (default value)
1	7 bit data bytes

Table 5–13: Data Length Settings

Bit 6: Parity Bit

0	No parity bit (default value)
1	Parity bit

Table 5–14: Parity Settings

Bit 5: Even/Odd Parity

0	Even parity (default value)
1	Odd parity

Table 5–15: Odd/Even Parity Settings

- Invalid when bit 6 is set to 0, without parity.

Bit 4: Stop Bit

0	1 stop bit (default value)
1	2 stop bits

Table 5–16: Stop Bit Settings

Bits 3 – 0: Baud rate setting

Bit 3	Bit 2	Bit 1	Bit 0	Setting
0	0	0	0	300 bps
0	0	0	1	600 bps
0	0	1	0	1200 bps
0	0	1	1	2400 bps
0	1	0	0	4800 bps
0	1	0	1	9600 bps (default)
0	1	1	0	19200 bps
0	1	1	1	38400 bps
1	0	0	0	Reserved
1	0	0	1	Reserved
1	0	1	0	Reserved
1	0	1	1	Reserved
1	1	0	0	57600 bps
1	1	0	1	115200 bps
1	1	1	0	230400 bps
1	1	1	1	Reserved

Table 5–17: Baud Rate

REG21: Serial Interface Setting 2 [default value: 09H]

Bits 7 – 4: Reserved

- The FDL01TU does not use this register. Keep the default value as it is.

Bit 4: Command Header

0	Use REG 10 character
1	Use Break signal

Table 5–16: Command Header

Bit 1: Flow Control

0	Software flow control (default value)
1	Hardware flow control

Table 5–18 Software/Hardware Flow Control Settings

- Selects the flow control method. This setting must match the connected terminal equipment's setting.
- *Hardware flow control* uses the two *control lines RTS* and *CTS*. When using with the RS485 interface, be sure to set to 0.
- *Software flow control* uses XON and XOFF codes.

Bit 0: Flow Control 2

0	disable flow control
1	enable flow control

Table 5–31: Flow Control 2 Settings

- Enable or disable flow control between the terminal and FDL01TU modem connected through the RS-232C serial interface.
- This function should normally be enabled, otherwise buffer overflow can occur and data may be lost.

REG22: Serial Interface Setting 3 [default value: 00H]

Bit 7: Enable and Disable Reception

0	Enable reception at the initial state (default value)
1	Disable reception at the initial state

Table 5–19: Enable/Disable Reception

- The initial state is in *reception enable*. Depending on an usage of the modem, the initial state of the modem may be better in the *reception disable* state. In such a case, use this setting.

- Issue the REN command to enable reception.

Bit 6: Reserved

- The FDL01TU does not use this register. Keep the default value as it is.

Bits 5 – 4: DCD (Data Carrier Detect)

Bit 5	Bit 4	Setting
0	0	Ignore DCD input; DCD output always ON (default value)
0	1	Ignore DCD input; DCD output ON at connection, OFF at disconnection
1	0	Remote modem's DCD (IN) is transferred to local modem DCD (OUT). (DCD Output = OFF at reset state)
1	1	Remote modem's DCD (IN) is transferred to local modem DCD (OUT) (DCD Output = ON at reset state)

Table 5–20: DCD Settings

Bits 3 – 2: DTR/DSR

Bit 3	Bit 2	Setting
0	0	Ignore DTR input; DSR output always ON (default value)
0	1	Ignore DTR input; DSR output ON at connection, OFF at disconnection
1	0	Remote modem DTR is transferred on local modem CTS (CTS = OFF at reset state)
1	1	Remote DTR is transferred on local modem CTS (CTS = ON at reset state)

Table 5–21: DTR/DSR Control Settings

Bits 1 – 0: Reserved

- The FDL01TU does not use this register. Keep the default value as it is.

REG23: Serial Interface Setting 4 [default value: 00H]

Bit 7 : reserved

- The FDL01TU does not use this register. Keep the default value as it is.

Bit 6 : Transmission buffer clear

0	Data of the transmission buffer is kept after disconnection (default value)
1	Transmission buffer is cleared when the link is disconnected.

Table 5–38 Transmission buffer clear

- Determine to clear or not to clear data stored in the transmission buffer in the data transparent mode when the link is reconnected.

Bit 5 : reserved

- The FDL01TU does not use this register. Keep the default value as it is.

Bit 4 : CR/LF addition/deletion

(1) Setting at the headerless stream mode

0	does not add CR/LF code to the received data (default value)
1	adds CR/LF code to the received data

Table 7–6: Addition of CR/LF code

- In the *headerless stream mode*, setting is made whether the CR/LF character is added to the received data or not.
- In the communication between the modems set to the *headerless packet mode*, this setting is invalid because the *terminator* is originally added to the transmit data. However, when a packet is received from the modem in the *packet transmission mode*, there is no addition of the CR/LF *terminator*. In this case, set this bit to 1. Then the received packet is output with the CR/LF character is added.

(2) Setting at the packet transmission mode

0	adds the CR/LF to the received data (default value)
1	does not add the CR/LF to the received data

Table 7–7: Deletion of CR/LF character

- In the *packet transmission mode*, setting is made whether the CR/LF character is added to the received data or not.
- At the receiver modem (set to the *packet transmission mode*), the sender (set to the *headerless stream mode*) side *terminator* (CR/LF character as default) plus *packet transmission mode terminator* (CR/LF) are output. To avoid such redundant outputs, set this bit of the modem in the normal *packet transmission mode* to 1.

Bit 3: reserved

- The FDL01TU does not use this register. Keep the default value as it is.

Bit 2: RS485 collision avoidance regular interval output

0	No C/R code output for collision avoidance (default value)
1	Regularly output C/R code for collision avoidance

Table 5–23: C/R Code Regular Interval Output

- Sets whether the *collision avoidance function* is used or not, together with bit 1.
- When this bit is set to 1, *responses* or data will be output to RS485 line if there are such *responses* or data exist in the buffer at the timeout of the *RS485 Packet Interval* (REG07). If there are no such *responses* or data exist in the buffer, the C/R code (0Dh) is compulsorily output.
- The effective use of this function helps to shift the output timing of multi-dropped modems on RS485 line. Eventually it avoids the data collision on the RS485 line.

- To use this function, set REG23:bit 1 of all RS485 multi-dropped modems to 1. And set all the *RS485 Packet Interval* (REG07) to different values more than 1.5 bytes each. Further set this bit of the modem, the *RS485 Packet Interval* is set to the longest, to 1.

Bit 1: RS485 collision avoidance

0	Invalid collision avoidance function (default value)
1	Use collision avoidance function

Table 5–24: Collision Avoidance Function

- Sets to decide whether to use the *collision avoidance function* or not, together with bit 2.
- When modem tried to output a *response* or the received data, the modem outputs only if RS485 line is available at the timeout of *RS485 Packets Interval* (REG07). When RS485 line is not available at the timeout, the modem waits for a line becomes available and starts re-measurement of its *packet interval*.
- Set to 1 makes it unable to output neither *response* nor the received data, unless other modem(s) outputs any data to the RS485 line and *interval time* measuring becomes effect.
- Bit 2 is used for the purpose of resolving this problem.

Bit 0: Global addressing command response

0	No P0 response to global addressing command (default value)
1	Respond P0 response to global addressing command

Table 5–25: Global addressing command response

- Set to decide whether to return "P0" *response* (including "P1" for the *transmit command*) to the terminal equipment for the *global addressing command* (commands for Addresses 240 to 254).
- When the *global addressing command* is issued to plural modems, which are multi-dropped and have the same *global address* on RS485 line, there is a possibility causing data *collision* on the RS485 line. Unless the *RS485 Packet Interval* is properly set. This is because all modems return the "P0" (or P1) *response* to the terminal equipment simultaneously on *default memory setting*. Such potential problem can be avoided by limiting the modem to output the *response* to the *global addressing command* is only one.

REG24: Special Mode Settings [default value: C0H]

Bit 7 : reserved

- The FDL01TU does not use this register. Keep the default value as it is.

Bit 6: Transmission trigger (Headerless stream mode)

0	Need trigger even if data number exceeds 255 bytes(default value)
1	Transmit without trigger when the data number exceeds 255 bytes

Table 5–26: Transmission trigger setting

- Sets the trigger mode of the Headerles stream mode.

Bit 5 – 2: reserved

- The FDL01TU does not use this register. Keep the default value as it is.

Bits 1 – 0: Reception protocol

Bit 1	Bit 0	Setting
0	0	Receive with the setting of REG18 bit7 to bit6(default value)
0	1	Receive with the packet transmission mode
1	0	Receive with the headerless stream mode
1	1	Receive with the protokol of the received packet

Table 5–21: Reception protocol

REG25: Special Mode Settings 2 [default value: 40H]

Bit 7 – 3: reserved

- The FDL01TU does not use this register. Keep the default value as it is.

Bit 2: Group address settings

0	Normal group address (240 to 254)(default value)
1	Extended group address (1000 to 1023)

Table 5–29: Group address setting

Bit 1: Address response

0	No response the address when the link is connected or disconnected (default value)
1	Response the destination address when the link is connected or disconnected.

Table 5–29: Address response

Bit 0: Route finding

0	According to the memory registers (default value)
1	Trace the received packet.

Table 5–29: Settings of the route

REG26: Data input timeout [default value: 00H]

- Sets the vacant duration time interval to recognize as the end of the message data input in the headerless stream mode.

REG27: Reserved [default value: 00H]

- The FDL01TU does not use this register. Keep the default value as it is.

SECTION

6

COMMAND SET DESCRIPTION

6.1 Command Set Description

This section provides a description of each command available in the FDL command set. The table below lists each command and it applicability in each operation mode.

	Command	Function
1	ARG	Reference All Memory Resisters
2	BCL	Clear Transmit and Receive Buffers
3	CON	Connect Wireless Link
4	DAS	Reference and Set the Destination Address
5	DBM	Read Signal Strength
6	DCN	Disconnect Wireless Link
7	FRQ	Reference and Set Frequency Group
8	INI	Initialize All Memory Resisters
9	ODA	Disable Received Data Output
10	OEN	Enable Received Data Output
11	PAS	Reference and Set Repeater Address
12	RDA	Disable Wireless Reception
13	REG	Reference and Set Memory Resisters
14	REN	Enable Wireless Reception
15	RID	Display Received Serial ID
16	RNO	Reference and Set Retransmission Count
17	ROF	RF Circuit Block Power Down
18	RON	RF Circuit Block Power Up
19	RST	Reset
20	SAS	Reference and Set Local Station Address
21	STS	Read Status
22	TBN	Transmit Binary Data
23	TBR	Transmit Binary Data Through Repeater
24	TID	Display Local Station Serial ID
25	TXR	Transmit Text Data Through Repeater
26	TXT	Transmit Text Data
27	VER	Reference Version Information

Table 6–1: Command to Mode Availability

The symbols used in this section have the following meaning:

> : Input character from the terminal equipment to the modem
< : Output from the modem to the terminal equipment
@ : *Command header*
CR/LF : *Terminator* (carriage return + line feed)
[ ] : Required input parameter/s Be sure to input.
( ) : Optional input parameter/s May be omitted
{} : *485 mode local station address* (REG00). Be sure to input at *485 mode*

In the *Syntax* and *Response* segments of the following command descriptions the *terminator* symbol (CR/LF) has been omitted for clarity.

ARG — Reference All Memory Registers

Syntax

ARG{Local Station Address}

Local Station Address : *local station address* for *485 mode* (000 to 999).

Response

All settings are indicated (REG00 to REG27)
N0: *command error* (Except *485 mode*)

Function

Recalls the contents of all 28 *memory registers*.

Example

>@ARG CR/LF	: Recall the contents of all the *memory registers*
<REG00 : 001 CR/LF	: Consecutive output of register contents
<REG01 : 240 CR/LF	: Register values output in hexadecimal codes
<REG02 : 002 CR/LF	
<REG03 : F0H CR/LF	
|	
|	
<REG26 : 00H CR/LF	
<REG27 : 00H CR/LF	

BCL — Clear Transmit and Receive Buffers

Syntax

BCL{Local Station Address}

Local Station Address : *local station address* for *485 mode* (000 to A22).

Response

P0 : command accepted
N0 : *command error* (Except *485 mode*)

Function

On *headerless stream mode* , clears the contents of the transmit and receive buffers of the modem.

Example

>@BCL CR/LF	: clear the buffer contents
<P0 CR/LF	: command accepted

Example

>@BIV025 CR/LF	: Set the *receiving (transmission) interval* at 250 ms
<P0 CR/LF	: command accepted
>@BIV CR/LF	: Refer the current value
<025 CR/LF	: 025 (25 0ms) returns

Notes

Values set by the BIV command will be lost by turning the power on or resetting.

Generally, this parameter is no need to modifying. Use with the default value.

CON — Connect Wireless Link

Syntax

CON(destination address)

destination address : 000 to 999

Response

P0 : connection established
P1 : command received, link established
N0 : command error
N1 : connection failed – no response from destination modem
N4 : connection failed – local modem already connected to a remote modem.

Function

Requests a wireless link connection to the remote modem in *data transparent mode*.

If this command is input with no destination address parameter, the destination will be the address that was set with the REG02.

If the destination address is input, change the destination address to connect the wireless.

Example

>@DAS002 ↵ : set the destination address to 002
<P0 ↵ : connection established
>@CON ↵ : request wireless connection remote station 002
<P1 ↵ : connecting…
<P0 ↵ : connection established

(Time-Division-Duplex communication between terminals is established.)

>@DCN ↵ : request disconnection of the wireless link
<P1 ↵ : disconnecting…
<P0 ↵ : connection established
>@CON003 ↵ : request wireless connection to remote station 003
<P1 ↵ : connecting…
<P0 ↵ : connection established
>@CON004 ↵ : request wireless connection to remote station 004
<N4 ↵ : local modem already connected to a remote modem

Notes

If this command is input to designate the destination address, the destination address set with the DAS command will be changed to set the address designated with this command to the designation address.

DAS — Reference and Set Destination Address

Syntax

DAS(set destination address)

set destination address : the desired *destination address* (000 to A23)

Response

xxx : current value (reference)
P0 : command accepted (setting)
N0 : *command error*

Function

References or sets the *destination address* of the modem connection established with in the *data transparent mode* and *headerless stream mode*

The current DAS value can be referenced by entering the command with no parameter.

The DAS command is used for temporary modifying *destination address*. Change the value of REG02 to change the default value.

Example

>@DAS002 CR/LF : set the *destination address* to 002
<P0 CR/LF : command accepted
>@DAS CR/LF : reference the *destination address*
<002 CR/LF : current value output (002)

Notes

This command cannot be used in *packet transmission mode*.

The *local station address* (REG00) must be set to communicate with the remote modem. Communication cannot be established unless the *addresses* coincide with each other.

This command is not arrowed to use in *485 mode*.

DBM — Read Signal Strength

Syntax

DBM{Local Station Address}

Local Station Address : *local station address* for *485 mode* (000 to 999).

Response

-xxxdBm : signal strength
N0 : *command error* (Except *485 mode*)

Function

Reads the *received signal strength* and outputs the value in dBm.

Higher values represent stronger *signal strength* and better receiving conditions.

Example

>@DBM CR/LF : read *signal strength*
<-78dBm CR/LF : signal strength is -78dBm.

Notes

The range available for measurement is –40 dBm to –100 dBm. Since the *signal strength* indication has a slight error in its value, use this result for your 'rule of a thumb' reference.

This command outputs the *strength* of last *received packet*.

DCN — Disconnect Wireless Link

Syntax

DCN

Response

P0	:	connection established
P1	:	command received, link disconnected
N0	:	command error
N1	:	link disconnect failed
N4	:	link is disconnected

Function

In *data transparent mode*, this command requests wireless disconnection from the remote modem.

Example

>@CON002 ↵	:	request wireless connection to station 002
<P1 ↵	:	connecting…
<P0 ↵	:	connection established

(Time-Division-Duplex communication between terminals is established.)

>@DCN ↵	:	request disconnection of the wireless link
<P1 ↵	:	disconnecting…
<P0 ↵	:	connection established
>@DCN ↵	:	request disconnection of the wireless link
<N4 ↵	:	link is disconnected

FRQ — Reference and Set Frequency Group

Syntax

FRQ(:frequency group){Local Station Address}

frequency group	:	combination of *frequency grouping method* (A to H) and *group number* (00 to 75). See p.18 **FREQUENCY GROUPING** more details.
Local Station Address	:	*local station address* for *485 mode* (000 to A22) .

Response

xxx	:	current value
P0	:	command accepted
N0	:	*command error* (Except *485 mode*)

Function

References or sets the *frequency grouping method* and *group number*.

The current set value is referenced by omitting the ":frequency group" parameter

This command is for temporary use only. To change the default value, change the settings of REG06.

Example

>@FRQ CR/LF : reference the current *grouping method* and *frequency number*
<F00 CR/LF : output current value (*grouping method* F: *group number* 00)
>@FRQ:E03 CR/LF : set *grouping method* to E (6 groups) and *group number* to 3.
<P0 CR/LF : command accepted

Method	Group Numbers	Frequencies per Group
A	0 to 75	1
B	0 to 37	2
C	0 to 24	3
D	0 to 18	4
E	0 to 11	6
F	0 to 8	8
G	0 to 5	12

Table 3–7: Frequency Grouping Methods and Group Numbers

Notes

Do not change this setting while the modem is being transmitted.

The maximum number of *frequency groups* available depends upon the selected *grouping method*.

INI — Initialize All Memory Registers

Syntax

INI{Local Station Address}

Local Station Address : *local station address* for *485 mode* (000 to A22).

Response

P0 : command accepted
N0 : *command error* (Except *485 mode*)

Function

Sets the all contents of the *memory registers* to the factory default values.

Example

>@INI CR/LF : initialize all memory registers
<P0 CR/LF : command accepted

Notes

Custom settings of all *memory registers* are lost when this command is executed.

If the *group address* (REG01) is designated while RS485 multi-drop connection is being made in the *RS485 mode*, the *local station address* of all modems will be initialized to 000. Exercise care when issuing this command.

For a list of the *factory default values*, see the section titled p.27 **MEMORY REGISTER DESCRIPTION**.

ODA — Disable Received Data Output

Syntax

ODA{Local Station Address}

Local Station Address : *local station address* for *485 mode* (000 to A22).

Response

P0 : command accepted
N0 : *command error* (Except *485 mode*)

Function

Disables output of any data received via the wireless link to the terminal equipment.

Data received, while output is disabled, is stored in the receive buffer.

When the modem's power is turned on (or a reset), the modem is in the state to *enable* the *received data output*.

Example

>@ODA CR/LF : *disable* the output of received wireless data
<P0 CR/LF : command accepted

(Data is not output during this period even if received.)

>@OEN CR/LF : *enable* the output of received wireless data.
<P0 CR/LF : command accepted
<RXT002HELLO CR/LF : outputs data stored in the receive buffer
<RXT003MAIL CR/LF :

OEN — Enable Received Data Output

Syntax

OEN{Local Station Address}

Local Station Address : *local station address* for *485 mode* (000 to A22).

Response

P0 : command accepted
N0 : *command error* (Except *485 mode*)

Function

Enables output of any data received via the wireless link to the terminal equipment.

This command enables serial data output after it has been disabled with the ODA command.

When the modem's power is turned on (or a reset), the modem is in the state to *enable* the *received data output*.

Example

>@ODA CR/LF	: *disable* serial output of received wireless data
<P0 CR/LF	: command accepted

(Data is not output during this period even if received.)

>@OEN CR/LF	: *enable* serial output of received wireless data.
<P0 CR/LF	: command accepted
<RXT002HELLO CR/LF	: outputs data stored in receive buffer
<RXT003MAIL CR/LF	: and any new data received

PAS — Reference and Set Repeater Address

Syntax

PAS (:Repeater Address1 :Repeater Address2)

Repeater Address : *repeater address* to pass through

Response

xxx : xxx	: current address (reference)
P0	: command accepted (setting)
N0	: *command error*

Function

In the *headerless stream mode* , references and sets the *repeater address* to pass through

When no *repeater address* is set, the current setting can be referenced.

This command is used to temporarily change *repeater address*. To change the default value, change REG13.

Example

>@PAS CR/LF	: references the current *repeater address*
<004 : A00 CR/LF	: current *repeater address* is 004
<P0 CR/LF	: command accepted
< @PAS:002:A00 CR/LF	: sets the *repeater address* to 002
<P0 CR/LF	: command accepted

Notes

This command is not allowed to be used in *485 mode*.

RDA — Disable Wireless Reception

Syntax

RDA{Local Station Address}

Local Station Address : *local station address* for 485 mode (000 to A22).

Response

P0 : command accepted
N0 : *command error* (Except *485 mode*)

Function

Disables wireless reception in the *packet transmission mode*.

The status when the modem is powered ON or reset follows bit 7 of REG22.

Example

>@RDA CR/LF : *disable wireless reception*
<P0 CR/LF : command accepted

>@REN CR/LF : *enable wireless reception*
<P0 CR/LF : command accepted

REG — Reference and Set Memory Register

Syntax

REG[register number](: value) {;Local Station Address}

register number : *register* number to be set (00 to 27)
value : value to be set. Input 2 hexadecimal digits (0 through 9 and A through F) followed by the number radix designator H.
Local Station Address : *local station address* for *485 mode* (000 to A22).

Response

xxx : current value (reference)
P0 : command accepted (setting)
N0 : *command error* (Except *485 mode*)
N6 : memory register write error

Function

References or sets *memory registers*.

The current *register* value is referenced by omitting the "value" parameter.

Example

>@REG00 CR/LF : reference the contents of *register* 00
<01H CR/LF : displays current value
>@REG00 : 023 CR/LF : set value of *memory register* 00 to 023 (decimal)
<P0 CR/LF : command accepted

Notes

The *register* can be rewritten sequentially. However, to make its parameter valid after rewriting it, re-supply the power, reset the modem or use RST command.

While rewriting the *memory register*, do not turn off the power until *response* is output. Otherwise, the *memory registers* content may be collapsed.

When the *response* of the *memory register write error* is output, set the values after initializing the *memory register*.

REN — Reception Enable

Syntax

REN{Local Station Address}

Local Station Address : *local station address* for *485 mode* (000 to A22).

Response

P0 : command accepted
N0 : *command error* (Except *485 mode*)

Function

Enables wireless reception in the *packet transmission mode*.

The status when the modem is powered ON or reset follows bit 7 of REG22.

Use this command to *enable wireless reception* after reception is disabled with the RDA command.

Example

>@RDA CR/LF : *disable wireless reception*
<P0 CR/LF : command accepted

>@REN CR/LF : *enable wireless reception*.
<P0 CR/LF : command accepted

RID — Display Received Serial ID

Syntax

RID{Local Station Address}

Local Station Address : *local station address* for *485 mode* (000 to 999).

Response

XXXXXXXXXXXX : displays the received *serial ID code* (12 digits)
N0 : *command error* (Except *485 mode*)

Function

Outputs the *serial ID code* in the received packet and displays it.

The *serial ID code* consists of 12 digits; upper three digits are 0 and the lower 9 digits are the *product serial number* of the transmitted-end modem.

Be noted that the *serial ID code* of the packet received last is displayed. When packets are received from multiple stations and their data are stored in the receiving buffer, those data may not be correspond to the *serial ID code* readout with RID command.

To use it more securely, it is recommended to readout the *local serial ID code* with TID command and pad it (either all or a part of it) in the transmitting packet.

When no packet is received, "All Zero" is displayed as the result of this command execution.

The *serial ID code* is no relation with *ID code* setting of REG04 and 05.

Example

>@RID CR/LF : requests the received remote station's *serial ID code*
< XXXXXXXXXXXX CR/LF :outputs the received remote station's *serial ID code*

RNO Reference and Set Retransmission Count

Syntax

RNO (:Retransmission count) {; Local Station Address}

Retransmission count : maximum *number of retransmissions* (000 to 255)
Local Station Address : *local station address* for *485 mode* (000 to A22).

Response

xxx : current set value
P0 : command accepted
N0 : *command error* (Except *485 mode*)

Function

This command references or sets the *number of retransmissions (retransmission count)* to attempt before making decision as transmission failure.

The current value can be referenced by issuing the command with no parameter.

RNO command is used to temporarily change the *retransmission count*. To change the default value, change the setting of REG11.

Example

>@RNO CR/LF : reference the *retransmission count*
<050 CR/LF : output the current set value (50 times)
>@RNO010 CR/LF : set the *retransmission count* to 10 times
<P0 CR/LF : command accepted

ROF RF Circuit Block Power Down

Syntax

ROF{Local Station Address}

Local Station Address : *local station address* for *485 mode* (000 to A22).

Response

P0 : command accepted
N0 : *command error* (Except *485 mode*)

Function

Turn off the power of *RF circuit block* and stops RF operation.

This function is used to save the current consumption when no transmit/receive are required.

Example

>@ROF CR/LF : turn off *RF circuit block*
<P0 CR/LF : command accepted

>@RON CR/LF : turn on *RF circuit block*
<P0 CR/LF : command accepted

RON — RF Circuit Block Power Up

Syntax

ROF{Local Station Address}

Local Station Address : *local station address* for *485 mode* (000 to A22).

Response

P0 : command accepted
N0 : *command error* (Except *485 mode*)

Function

Turn on the power of *RF circuit block* and activates RF operation.

Use this command to activate *RF circuit block* after its *power down state* set by the ROF command.

The status when the modem is powered ON or reset, the *RF circuit block* is in the operation state.

Example

>@ROF CR/LF : turn off *RF circuit block*
<P0 CR/LF : command accepted

>@RON CR/LF : turn on *RF circuit block*
<P0 CR/LF : command accepted

RST — Reset

Syntax

RST{Local Station Address}

Local Station Address : *local station address* for *485 mode* (000 to A22).

Response

P0 : command accepted
N0 : *command error* (Except *485 mode*)

Function

Resets the modem to restore the power on state.

When any *memory register* is rewritten with REG command before issuing this command, the value rewritten becomes valid and active. Temporary settings like DAS and FRQ command become invalid and the *memory register* settings is loaded.

Example

>@RST CR/LF : reset the modem
<P0 CR/LF : command accepted

Note

When a serial communication parameter in *memory register* is changed with REG command, the *response* of "P0" returns according to the changed setting parameter, which may cause communication error. In such a case, set the communication parameter of the terminal equipment in correspondence with the new setting immediately after the issuance of RST command.

SAS Reference and Set Local Station Address

Syntax

SAS (:set value){Local Station Address}

set value : new local station address (000 to 999)
Local Station Address : *local station address* for *485 mode* (000 to 999).

Response

xxx : current value (reference)
P0 : connection established (setting)
N0 : command error

Function

References or sets the local station address.

The current value can be referenced by entering this command with no parameter. For setting, input the desired value to set.

The SAS command is for temporary local address and setting. To more permanently change the local station address value, use REG00.

Example

>@SAS001 ↵ : set the station address to 001
<P0 ↵ : connection established
>@SAS ↵ : reference the local station address
<001 ↵ : output the current value (001)

STS Read Status

Syntax

STS{Local Station Address}

Local Station Address : *local station address* for *485 mode* (000 to 999).

Response

xxxxxxxx : modem's current status (x = 0 or 1)
N0 : *command error* (Except *485 mode*)

Function

Reads the modem *status register*. (Represented with an 8-bit binary number.)

X X X X X X X X

Bit	Name	Status	
		1	0
0	Connection	Connected	Disconnected
1	Reception	Disabled	Enabled
2	Output message	Disabled	Enabled
3	Receive buffer	Data exist	Data empty
4	Transmit buffer	Data exist	Data empty
5	Reserved	-	-
6	Reserved	-	-
7	Reserved	-	-

Figure 6–2: Modem Status Bit Description

Example

>@STS CR/LF : read the current status
<00001010 CR/LF : Received data exist, Output message enabled, Reseption disabled ,Disconnected.

TBN Transmit Binary Data

Syntax

TBN[destination address][message byte length]{Local Station Address}[message]

Destination address : address of the *transmission* (000 to A23)
Message byte length : message length (001 to 255)
Local Station Address : *local station address* for *485 mode* (000 to A22).
Message byte : arbitrary binary data (255 or less)

Response

P0 : data transmission succeeded
P1 : command accepted, data being transmitted
N0 : *command error* (Except *485 mode*)
N1 : data transmission failed -- no *response* from *destination station*
N2 : data transmission failed -- *destination station* is in the *reception disabled state*
N3 : data transmission failed -- *destination station* cannot receive because its receive buffer is full

Function

Transmits binary data in the *packet transmission mode*.

Any *message length* between 1 to 255 bytes is accepted.

The modem counts the number of message characters and transmits the message.

For *broadcasting* messages to multiple modems, set the *destination address* to 255. In this case, the modem *retransmits* the message the number of times of the *Retransmission count* plus 1, and then it will return “P0”.

In case the *global addressing command* is issued to plural modems connected by RS485 multi-dropping interface, the transmission stops when any modem outputs “P0”, “N2” or “N3” *response* to the RS485 line.

Example

>TBN002005HELLO CR/LF : transmit “HELLO” from station 001 to station 002
<P1 CR/LF : data being transmitted
<P0 CR/LF : data transmission succeeded.
>@TBN003004MAIL CR/LF : retransmit “MAIL” from station 001 to station 003

<P1 CR/LF : data being transmitted
<N1 CR/LF : transmission failed, no *response* from *destination station*

Notes

Set the *message length* to 255 byte or less. The *message length* exceeding 255 byte will be *command error*.
Message must be terminated with 2 byte (CR/LF) character, others will be *command error*.
In *broadcast transmission*, the receiving result of the *destination station* cannot be confirmed at the sender side.

TBR Transmit Binary Data through Repeater

Syntax

TBR [repeater address] [destination address] [message byte length]{Local Station Address}[message]

Repeater address : *repeater* address to pass through (000 to 999)
Destination address : address of *destination station* (000 to A23)
Message byte length : message byte length (001 to 255)
Local Station Address : *local station address* for *485 mode* (000 to A22).
Message byte : arbitrary binary data (255 or less)

Response

P0 : data transmission succeeded
P1 : command accepted, data being transmitted
P2 : data packet reached to *repeater*
N0 : *command error* (Except *485 mode*)
N1 : data transmission failed -- no *response* from *destination station*
N2 : data transmission failed -- *destination station* is in the *reception disabled* state
N3 : data transmission failed -- *destination station* cannot receive because its receive buffer is full

Function

In the *packet transmission mode*, transmits binary data through *repeater*.
Any *message length* between 1 to 255 bytes is accepted.

The modem counts the number of message characters and transmits the message.

For *broadcasting* messages to multiple modems, set the *destination address* to 255. In this case, the modem *retransmits* the message the number of times of the *Retransmission count* plus 1, and then it will return “P0”.

In case the *global addressing command* is issued to plural modems connected by RS485 multi-dropping interface, the transmission stops when any modem outputs “P0”, “N2” or “N3” *response* to the RS485 line.

Example

>TBR100002005HELLO CR/LF : transmit “HELLO” from station 001 to station 002
<P1 CR/LF : data being transmitted
<P2 CR/LF : data packet reached to *repeater*
<P0 CR/LF : data transmission succeeded

Notes

Set the *message length* to 255 byte or less. The *message length* exceeding 255 byte will be *command error*.
Message must be terminated with 2 byte (CR/LF) character, others will be *command error*.
In *broadcast transmission*, the receiving result of the *destination station* cannot be confirmed at the sender side.

TID — Display Local Station Serial ID

Syntax

TID{Local Station Address}

Local Station Address : *local station address* for *485 mode* (000 to 999).

Response

XXXXXXXXXXXX : displays the *local serial ID code* (12 digits)
N0 : *command error* (Except *485 mode*)

Function

Readout the *local serial ID code* of the modem and display it. This command corresponds to RID command.

The *local serial ID code* consists of 12 digits; upper three digits are 0 and the lower 9 digits are the *product serial number* of the modem.

Be noted the usage of RID command, the *serial ID code* of the packet received last is displayed. When packets are received from multiple stations and their data are stored in the receiving buffer, those data may not correspond to the *serial ID code* readout with the RID command.

To use it more securely, it is recommended to readout the *local serial ID code* with the TID command and pad it (either all or a part of it) in the transmitting packet.

The *serial ID code* is no relation with *ID code* setting of REG04 and 05.

Example

>@TID CR/LF : requests the modem's *local serial ID code*
< XXXXXXXXXXXX CR/LF :outputs the modem's *local serial ID code*

TXR — Transmit Text Data through Repeater

Syntax

TXR [repeater address] [destination address]{Local Station Address}[message]

repeater address : address of *repeater* to pass through (000 to 999)
destination address : address of *destination station* (000 to A23)
Local Station Address : *local station address* for *485 mode* (000 to A22).
message : any text data (255 or less)

Response

P0 : data transmission succeeded
P1 : command accepted, data being transmitted
P2 : data packet reached to *repeater*
N0 : *command error* (Except *485 mode*)
N1 : data transmission failed -- no *response* from the *destination station*
N2 : data transmission failed -- *destination station* is in the *reception disabled state*
N3 : data transmission failed -- *destination station* cannot receive because its receive buffer is full.

Function

Transmits text data in the *packet transmission mode* through *repeater*.

Any *message length* between 1 to 255 bytes is accepted. The completion of data input is recognized by the *terminator*.

For *broadcasting* messages to multiple modems, set the *destination address* to 255. In this case, the modem *retransmits* the message the number of times of the *Retransmission count* plus 1, and then it will return "P0".

In case the *global addressing command* is issued to plural modems connected by RS485 multi-dropping interface, the transmission stops when any modem outputs "P0", "N2" or "N3" *response* to the RS485 line.

Example

>@TXR100002HELLO CR/LF	:	transmits HELLO from station 001 to station 002 through *repeater* 100
<P1 CR/LF	:	data being transmitted
<P2 CR/LF	:	data packet reached to *repeater*
<P0 CR/LF	:	data transmission succeeded

Notes

Set the *message length* to 255 byte or less. The *message length* exceeding 255 byte will be *command error*.
When the same character as the *terminator* (CR/LF) is contained in a message, the modem distinguishes it as the end of a command and ignore the subsequent data. In such a case, use TBR command.
In *broadcast transmission*, the receiving result of the *destination station* cannot be confirmed at the sender side.

TXT — Transmit Text Data

Syntax

TXT [destination address]{Local Station Address}[message]

destination address	:	address of *destination station* (000 to A23)
Local Station Address	:	*local station address* for *485 mode* (000 to A22).
message	:	any text data (255 or less)

Response

P0	:	data transmission succeeded
P1	:	command accepted, data being transmitted
N0	:	*command error* (Except *485 mode*)
N1	:	data transmission failed - no *response* from the *destination station*
N2	:	data transmission failed - *destination station* is in the *reception disabled state*
N3	:	data transmission failed – *destination station* cannot receive because its receive buffer is full.

Function

Transmits text data in the *packet transmission mode*.

Any message length between 1 to 255 bytes is accepted. The completion of data input is recognized by the *terminator* (CR/LF).

For *broadcasting* messages to multiple modems, set the *destination address* to 255. In this case, the modem will *retransmit* the message the number of times of the *Retransmission count* plus 1, and then it will return "P0".

In case the *global addressing command* is issued to plural modems connected by RS485 multi-dropping interface, the transmission stops when any modem outputs "P0", "N2" or "N3" *response* to the RS485 line.

Example

>@TXT002HELLO CR/LF	:	transmits HELLO from station 001 to station 002
<P1 CR/LF	:	data being transmitted

<P0 CR/LF : data transmission succeeded
>@TXT003MAIL CR/LF : transmits MAIL from station 001 to station 003
<P1 CR/LF : data being transmitted
<N1 CR/LF : transmission failed. no *response* from *destination station*

Notes

Set the *message length* to 255 byte or less. The *message length* exceeding 255 byte will be *command error*.
When the same character as the *terminator* (CR/LF) is contained in a message, the modem distinguishes it as the end of a command and ignores the subsequent data. In such a case, use TBN command.
In *broadcast transmission*, the receiving result of the *destination station* cannot be confirmed at the sender side.

VER — Reference Version Information

Syntax

VER{Local Station Address}

Local Station Address : *local station address* for 485 mode (000 to 999).

Response

Program Version x.xxx :Hardware system version
N0 : *command error* (Except *485 mode*)

Function

Reads the modem's hardware system version.

Example

>@VER CR/LF : read the version information
<Ver 1.000 CR/LF : this modem firmware is version 1.000

SECTION 7

APPENDIX

7.1 Conversion Circuit

Examples of the level conversion circuit are shown as a reference, which is just for the confirmation of system operation. This example does not guarantee the operation under users' actual operation environment.

7.1.1 RS-232C Level Converter

Wire the *control line* when necessary. Tie down unused input pin(s) to GND and leave the 485ENB pin open.

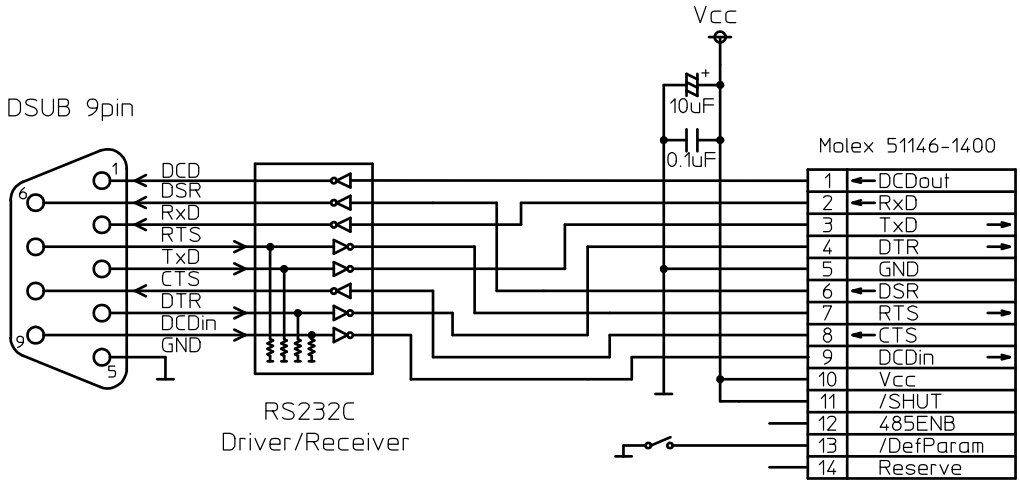

Figure B–1: RS-232C Level Conversion Circuit

7.1.2 RS422 Level Converter

Wire the output terminator (100 ohm) of the RS422 line driver, the input terminator (100 ohm) of the receiver, the input pull-up (1k ohm) and the input pull-down (1k ohm), when necessary.
Provide a surge absorber (e.g. Z2012 made by Ishizuka Denshi) when long RS422 line is used or there is much noisy environment, etc.

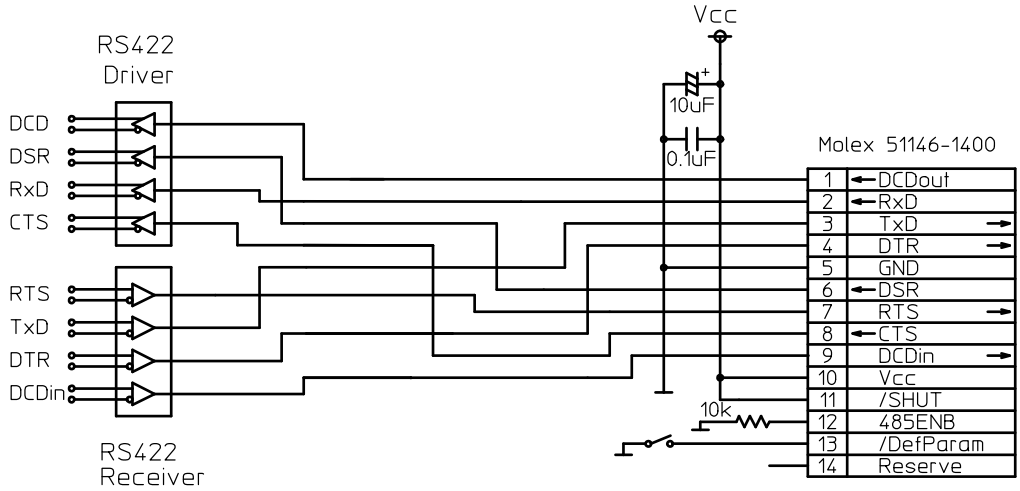

Figure B–2: RS422 Level Conversion Circuit

7.1.3 RS485 Level Converter

Wire the terminator of the RS485 bus (100 ohm), the input pull-up (1k ohm) and the input pull-down (1k ohm), when necessary.
When long RS485 line is used or there is much noise, provide the surge absorber (e.g. Z2012 made by Ishizuka Denshi) according to the situation.

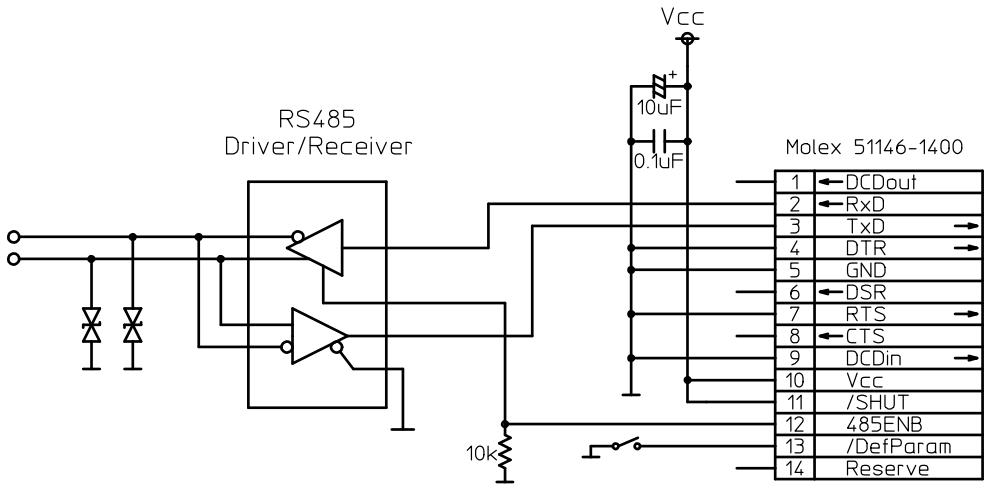

Figure B–3: RS485 Level Conversion Circuit

7.2 Specification of the Connectors

(1) Serial Communication connector

Connector:	MOLEX	53780-1490 (14 pins)
Mating Plug:	MOLEX	51146-1400

(2) Antenna connector

RF connector:	HIROSE	U.FL-R-SMT

⚠CAUTION The antenna connector is guaranteed for 30 times of plugging in/out.

⚠CAUTION When plugging out the antenna connector, use the specially prepared tool of E.FL-LP-N, provided by HIROSE (HIROSE Product No. CL331-0441-9).

7.3 Specification

7.3.1 Radio Characteristics

Engineering standard	FCC Part 15.247 (no user license required)
RF power output	6mW/MHz max.
Modulation	Direct sequence spread spectrum
Communication scheme	Single communication
Frequency band	2403.328 to 2480.128 MHz
Frequency channel	76 channels （26 channels available for simultaneous communication in one area）
Channel management	Fixed mode or group mode Fixed mode: communication by fixing 1 arbitrary frequency from 76 freq. Group mode: multi-access within a group of plural frequencies
Data barer rate	51.9 kbps
Oscillation	PLL synthesizer
Antenna diversity	2 branch reception diversity
Service area	In an indoor environment: 60m radius, depending on the environment In an outdoor environment: more than 300m (line-of-sight)
RF connector	Hirose U.FL-R-SMT
In/out of connector	30 times max. using E.FL-LP-N extractor (for exclusive use)

7.3.2 Communication Control

Radio link control	Command control
Error checking	CRC-CCITT (16 bit)
Error handling	ARQ (Automatic Retransmission Request)
Multi-access function	Connect on clearest channel from selected frequency group

7.3.3 Data Terminal Interface

Physical interface	Molex 53780-1400 (14 pins) Mating connector: 51146-1400
Interface specification	Serial communication Input CMOS level (5V tolerant with hysteresis) Output CMOS level
Communication	Full-duplex or half-duplex system
Synchronization	Asynchronous
Transmit/receive buffer	Approx. 3 k bytes in total
Baud rate	300 / 600 / 1200 / 2400 / 4800 / 9600 / 19200 / 38400 / 57600 / 115200 / 230400 bps
Flow control	Hardware flow / Software flow
Data length	7 or 8 bit
Stop bit	1 or 2 bit
Parity	Even, odd, or none

7.3.4 Power Supplying

Supply voltage	3.5 to 7.0Vdc
Current consumption	110 mA or less in the active mode 35 mA or less in the RF stop mode 1mA or less in the stanby mode

7.3.5 Environmental

Operating temperature	-10 to +60 ℃
Storage temperature	-20 to +70 ℃
Operating humidity	90%RH max. (no condensation)
Storage humidity	90%RH max. (no condensation)
Vibration resistance	JIS-C-0040 (50m/s^2, 10 to 150 Hz, 15 cycles)

Shock resistance	JIS-C-0041 (500m/s^2) (JIS specification is Japanese Industry Standard)

7.3.6 Miscellaneous

Memory register	Rewritable times: approx. 1 million times
Case	Ni plated steel plate
Outer dimensions	30 (W)×50(D)×8(H)mm
Weight	Aprox. 14g

† Operating distances depend on the conditions such as obstructions and electrical interference. Under ideal, line-of-sight conditions, reliable operating distances greater than specified may be achieved. Optional, directional antennas can significantly increase the operating range.

* Specifications and appearance are subject to change without prior notice.

7.4 Dimensions

7.4.1 FDL01TU

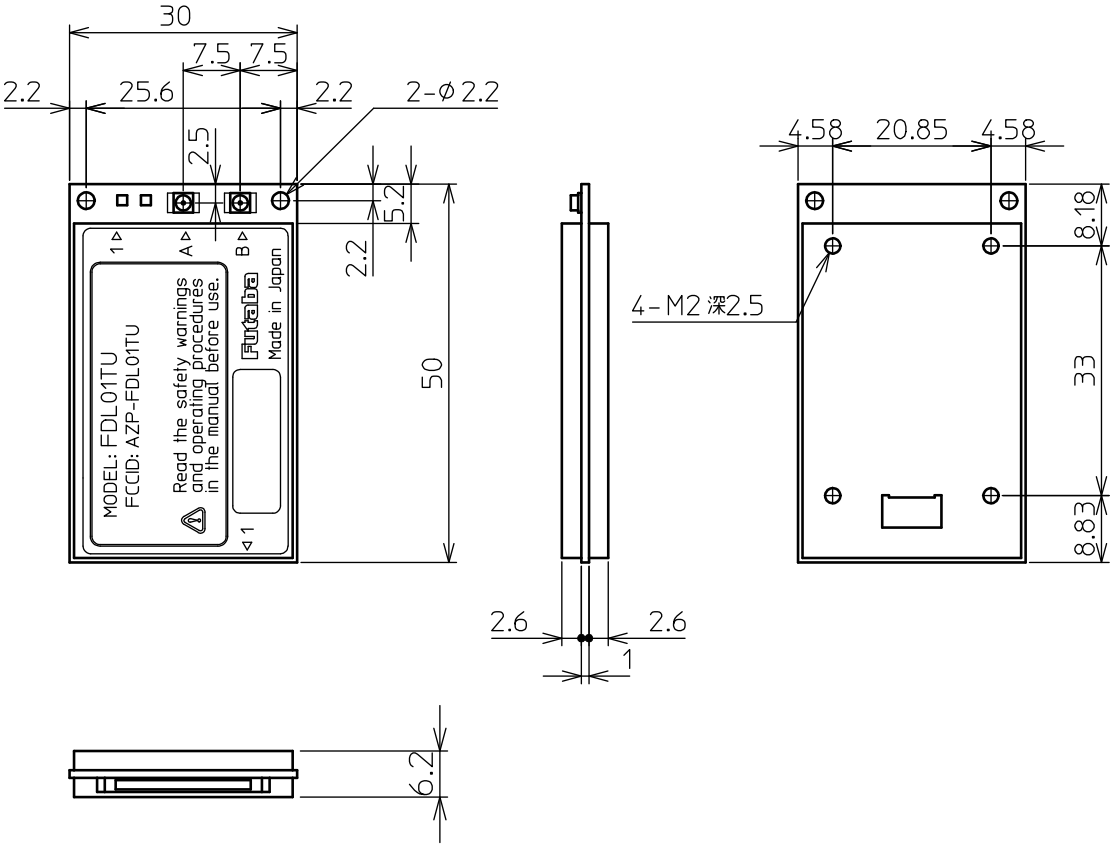

7.4.2 Communication Cable

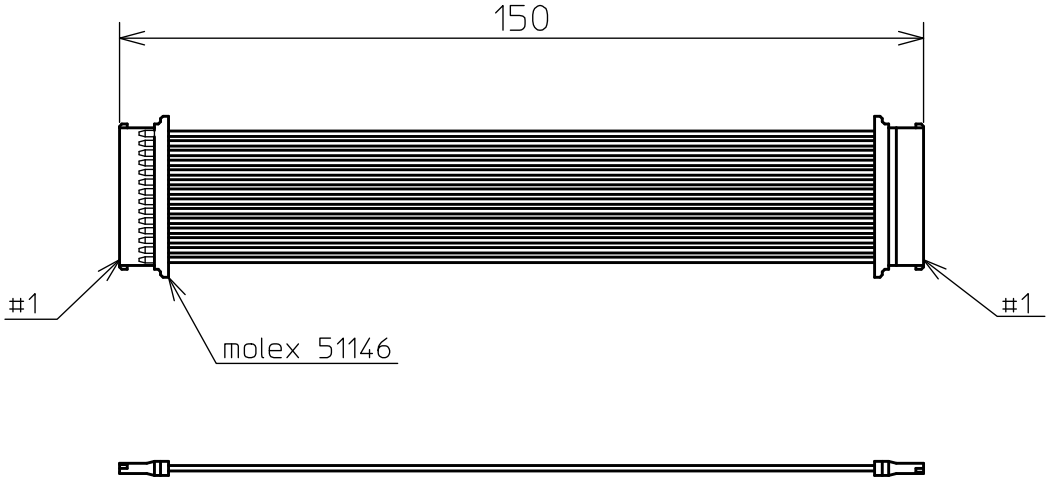

Futaba Corporation
Radio Control Equipment Group

1080 Yabutsuka Chosei
Chiba, 299-4395 JAPAN

Tel: +81 (475) 32-6173, Fax: +81(475) 32-6179
Internet: www.futaba.co.jp

In the United States
Futaba Corporation of America
Industrial Radio Control Department

1605 Penny Lane
Schaumburg, IL 60173

Tel: (847) 884-1444, Fax: (847) 884-1635
Internet: www.futaba.com

In the Europe
Pending.