YAMAHA

⚠ Please read this manual before using the product.

# Unmanned Helicopter for Industrial Applications

# FAZER

# OPERATION MANUAL

L35-28199-00

# Foreword

Thank you for purchasing the FAZER, an unmanned helicopter for industrial applications.
This operation manual describes the proper method for operating the FAZER and precautions.
Be sure to read this manual and thoroughly understand its contents before operating the FAZER.
In this manual, the warning messages that are necessary to ensure the safe and proper operation of the FAZER are classified as shown below. Make sure to observe these instructions because they all contain important information.

**⚠ DANGER**

**Improper operation will cause imminent danger, which could lead to serious injury or death.**

**⚠ WARNING**

**Improper operation could lead to injury, serious injury or death.**

***NOTICE***

**Improper operation could cause property damage.**

**TIP**

**Describes the proper handling method or gives the main points for inspection and maintenance.**

**Indicates a prohibited action.**
**An adjacent illustration describes the prohibited action.**

- After you have read this operation manual, keep it within easy access near the helicopter.
- Contact your dealer if you are lending this helicopter or transferring its ownership.
- Keep this operation manual together with the helicopter if you are lending this helicopter or transferring its ownership.
- If you have lost this operation manual, contact your dealer to request another copy.
- Contact your dealer if you have any questions or comments regarding the contents of this operation manual.
- Due to specification changes, some of the textual or graphical contents of this manual may differ from the actual helicopter.
- For information regarding the sprayer, refer to the operation manual for the sprayer.

# Table of Contents


| | |
|---|---|
| Safety Precautions | 1 |
| Product Specifications | 2 |
| Part Names and Functions | 3 |
| Pre-Flight Preparation | 4 |
| Flying Procedure | 5 |
| Post-Flight Cleaning and Servicing | 6 |
| Simple Maintenance | 7 |
| Proper Management | 8 |
| Product Management | 9 |
| Troubleshooting | 10 |
| Index | 11 |

# Safety Precautions

1

Product Safety Label Locations ..... 1-1

Make Sure to Follow the Instructions..... 1-2

Basic requirements ..... 1-2
Operator requirements..... 1-3
Helicopter requirements..... 1-5
Flight requirements ..... 1-7
Chemical requirements ..... 1-11

# Safety Precautions

## Product Safety Label Locations

Read and thoroughly understand the product safety labels affixed to the helicopter before operation.

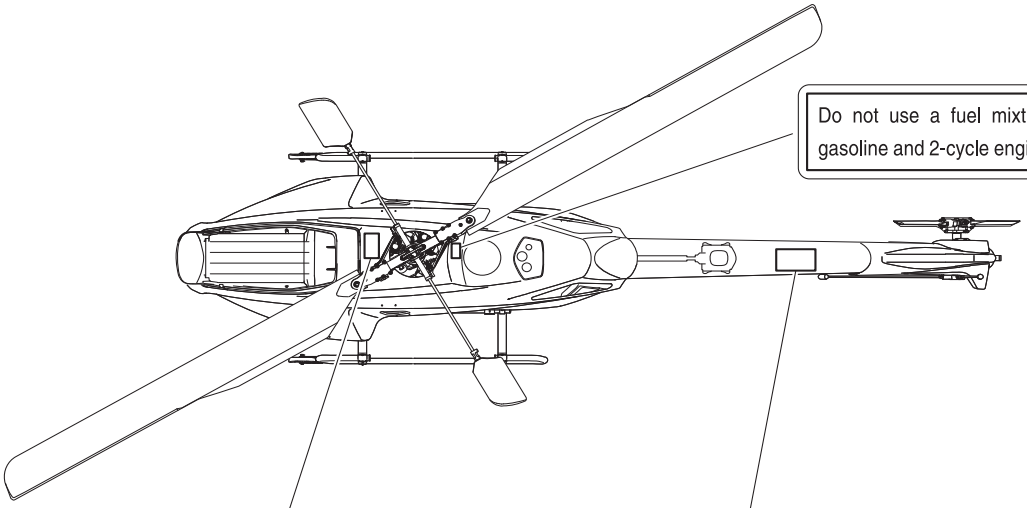

Do not use a fuel mixture of gasoline and 2-cycle engine oil.

**DANGER**

Serious injury or death could result.
Never approach the helicopter while the main rotor is rotating.

L17-N9811-00

**WARNING**

- Read the operation manual before using the product.
- This helicopter should be flown only by an operator who holds an operator license for unmanned helicopters.
- When taking off or landing or during flight, the operator and all other persons must be a minimum distance of 20 m away from the helicopter.
- When starting the engine, stand on the left side of the helicopter, support the main rotor with your body, make sure to keep the throttle stick at the slowest position with your right thumb, and press the starter switch on the helicopter with your left hand.
- After landing, make sure to press the engine stop switch on the transmitter to stop the engine.
- After the engine stops, press the rotor brake switch on the transmitter to stop the rotation of the rotors.
- Before refueling, replenishing the chemical, releasing air pockets, or performing other operations, make sure that the engine and rotors have stopped.
- Perform the pre-flight and post-flight inspections specified in the operation manual.
- Emergency Operation
  If the helicopter becomes inoperable during flight, check the surrounding area to make sure it is safe, and then perform the following operation to land the helicopter.
  ① Move the throttle stick to its slowest position.
  ② Press and hold down the engine stop switch.

L30-N9821-00

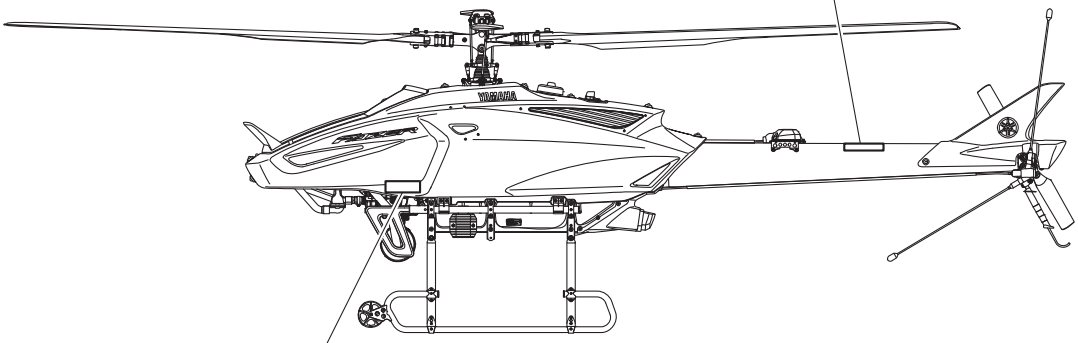

Placed on the left and right.

**WARNING**

Burns could result.
Do not touch the muffler.

L17-N9822-00

# Make Sure to Follow the Instructions

## Basic requirements

**⚠ WARNING**

**To ensure safe operation, make sure to thoroughly read the operation manual before operation.**

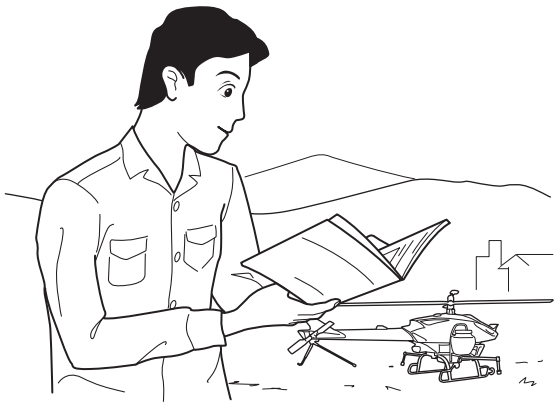

**⚠ WARNING**

**This unmanned helicopter for industrial applications has been manufactured for the purpose of the aerial application of agricultural chemicals, fertilizers, and seeds. Do not use it for other applications, which is in violation of laws, and could lead to accidents.**

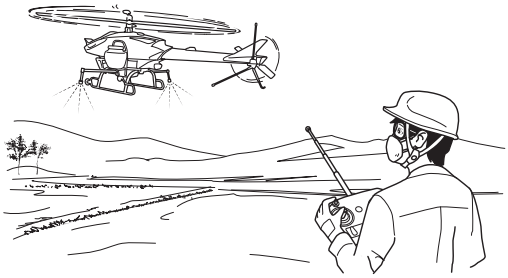

**⚠ WARNING**

**Do not modify the helicopter or the auxiliary devices. Do not use parts other than genuine parts. Any modification of the helicopter or use of non-genuine parts may cause unexpected accidents.**

## Operator requirements

**⚠ WARNING**

**Flying this helicopter requires a high level of skill.**
**Therefore, it should be flown only by an operator who holds an operator license for unmanned helicopters, issued by Yamaha Motor Co., Ltd.**
**In addition, if the country where the unmanned helicopter will be used requires an operator license, obtain the license before flying the helicopter.**

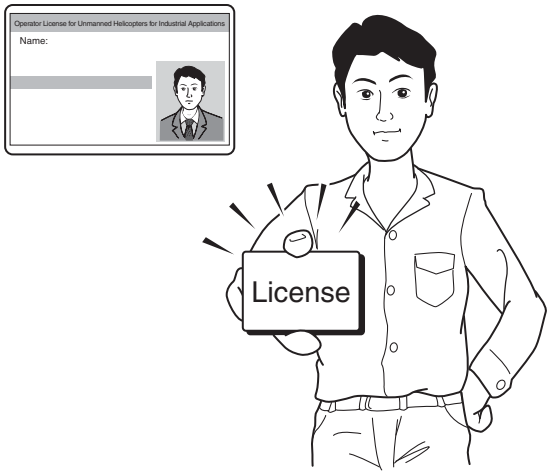


**⚠ WARNING**

**Make sure to wear a helmet during flight. To perform an aerial application, make sure to wear clothing that is appropriate for the operation. Performing a flight and an aerial application in clothing that is not appropriate for the task could cause loss of visibility, maneuvering error, or cause your foot to slip, resulting in unexpected accidents. Furthermore, it could harm your health through exposure to agricultural chemicals.**

Observe the following clothing requirements:
- Wear a helmet.
- Wear goggles and a particle mask.
- Wear long-sleeved clothing with secure buttons and fasteners.
- Wear slip-proof shoes that are easy to walk with.
- Do not wear objects that could obstruct vision when there is wind, or adversely affect operation (especially towels and gloves).

**⚠ WARNING**

**A minimum of three people is required for an aerial application: a signaler who has been briefed on the aerial application procedure, an assistant who readies, mixes, and supplies agricultural chemicals, and an operator. Beware that an understaffed operation could lead to an accident.**

**⚠ WARNING**

**The operation of an unmanned helicopter involves considerable mental fatigue. The operator should not fly the helicopter continuously for more than one hour, but should take a rest every hour. Prolonged continuous flight operation could cause the operator to lose concentration and could lead to an accident.**

**⚠ WARNING**

**Do not fly the helicopter after drinking alcohol or taking a cold medicine, or if you are in poor physical condition. Flying the helicopter in poor physical condition could cause loss of concentration, and could lead to an accident.**

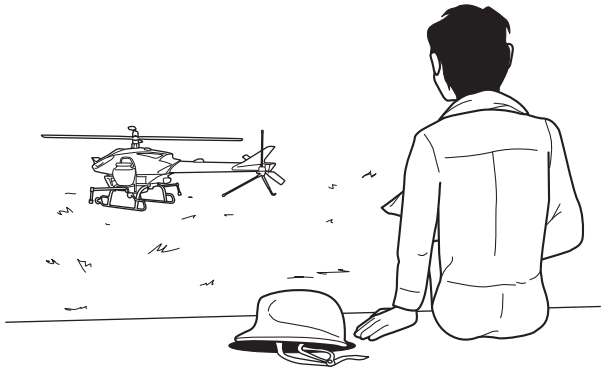

## Helicopter requirements

**⚠ DANGER**

**Never enter (or allow others to enter) the area within 20 meters of the helicopter until the main rotor has come to a complete stop and the engine has stopped. Failure to observe this precaution could cause a serious accident.**

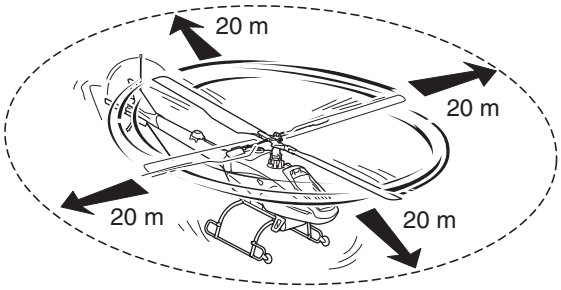


**⚠ WARNING**

**Gasoline is a highly volatile substance that ignites easily. Before refueling, be sure to stop the engine, and do not place a source of fire or sparks nearby. Failure to observe these precautions can cause the gasoline to ignite.**

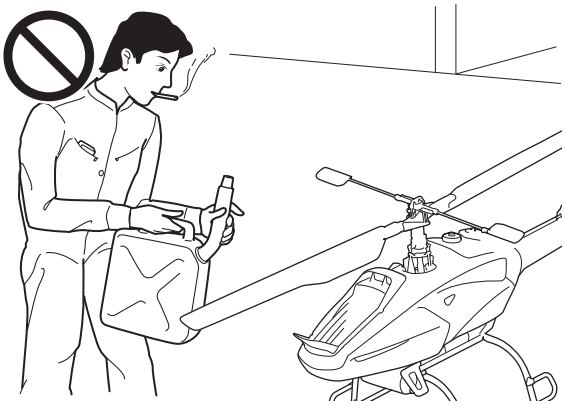

**⚠ WARNING**

- **Make sure to have the required inspections and maintenance services performed. Failure to do so could lead to a serious accident.**
- **To have the helicopter serviced, contact your dealer or an authorized service facility for Yamaha unmanned helicopters for industrial applications.**

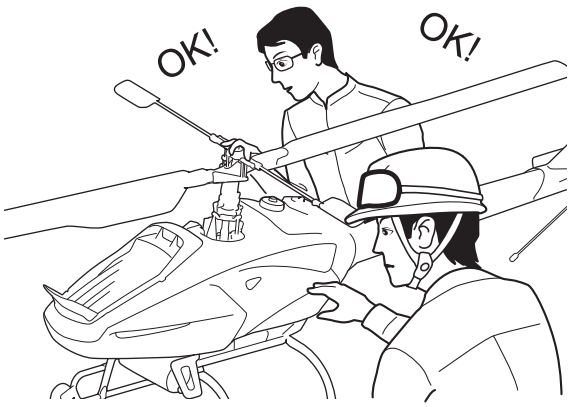


Make sure to perform the following inspections. Have the 30-hour free inspection and periodic inspections performed at your dealer.

- Pre-flight inspection
- Post-flight inspection
- 30-hour free inspection
- Periodic inspection

**⚠ WARNING**

**The muffler reaches a high temperature immediately after a flight. To prevent burns, do not touch it. To prevent burns or fire, do not place any flammable objects near the muffler. Also, touching it with oily shop rags or bare hands can leave their traces after combustion.**
**For cleaning, use shop rags that do not contain oil or grease.**

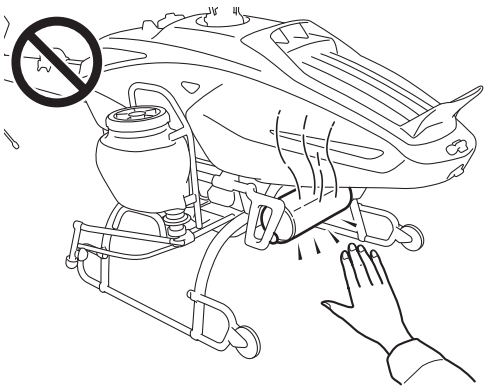

***NOTICE***

**The gyro sensor (integrated GPS/gyro sensor) attached to the top of the tail body is a precision instrument that senses the Earth's feeble magnetic force. Do not place any magnetized objects near it, which could cause the sensor to malfunction and the controls to function improperly.**

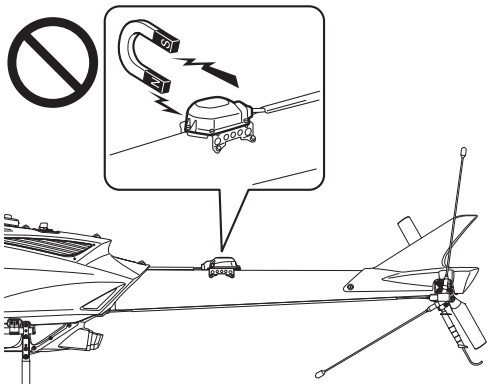

## Flight requirements

**⚠ DANGER**

**If the unmanned helicopter goes out of control beyond its flying range, make sure the area is uninhabited and safe, before performing the operation described below in order to drop the helicopter.**

**① Place the throttle stick to its SLOWEST position.**

**② Press and hold the engine stop switch down.**

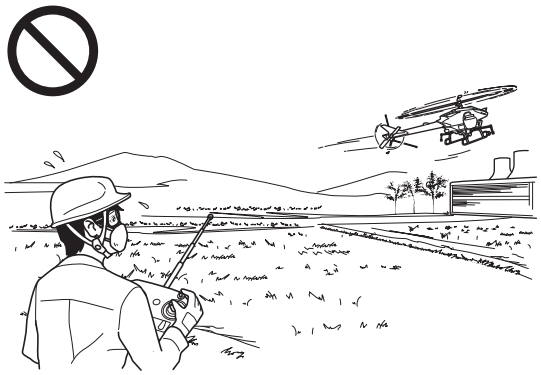

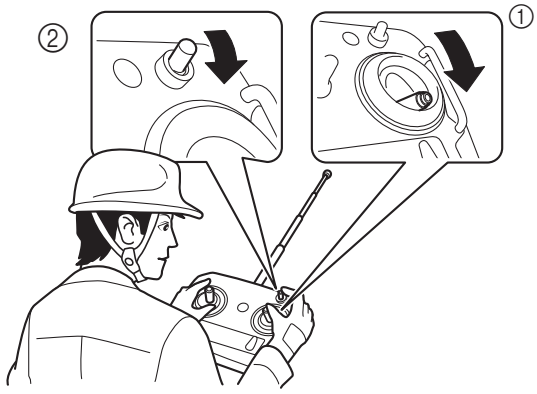


**⚠ WARNING**

**Never fly the helicopter in no-fly zones.**
**Flying in a no-fly zone can lead to a serious accident or exposure to chemicals.**

**Do not fly in the following areas.**

- **In the vicinity of or above airports, military facilities, heliports for manned helicopters, and gliding fields.**
  **The peripheral distances from no-fly zones vary by facility; contact the relevant authorities for details.**

- **In the vicinity of or above heavily trafficked roads, expressways, or railroads.**

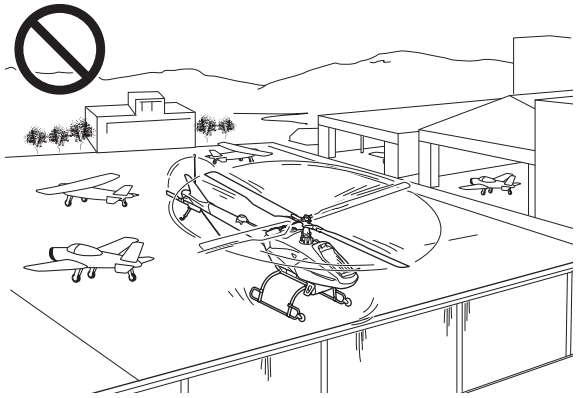

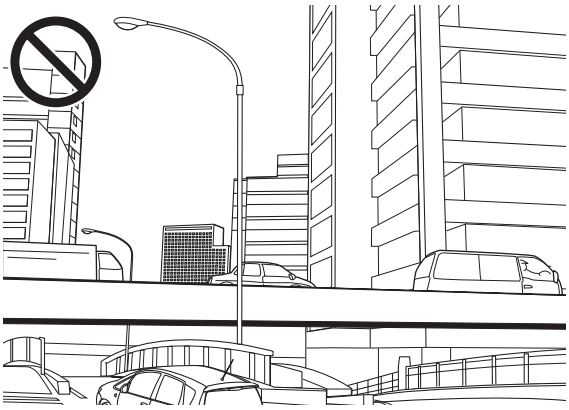

- **In the vicinity of or above petroleum, gas, chemical, and explosive complexes, tanks, or storage areas.**

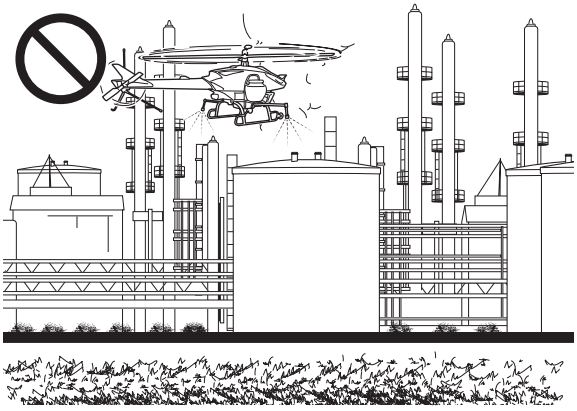

- **In the vicinity of or above high-voltage transmission lines, power generating plants, or power substations.**

- **In the vicinity of or above homes adjacent to the aerial spray area, or other hazardous obstacles.**

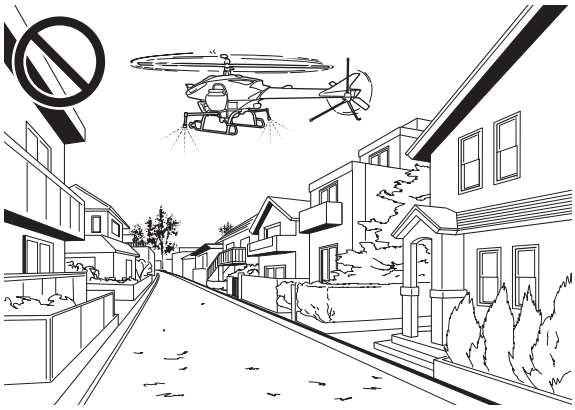

- **In the vicinity of or above port and harbor facilities including swimming areas, yacht harbors, fishing ports, reservoirs for potable water, or dams.**

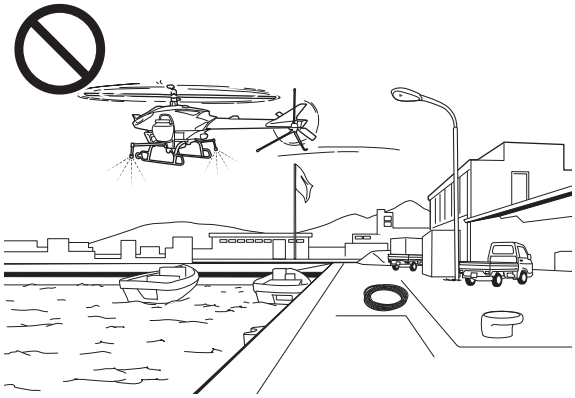

- **In the vicinity of or above areas posted with “no trespassing” or “keep out” signs.**
- **In the vicinity of or above areas where flight is prohibited by police or fire departments.**

**⚠ WARNING**

**The unmanned helicopter for industrial applications is operated by way of radio signals. To prevent the helicopter from going out of control due to unexpected radio signal interference, pay careful attention to the radio signals before and during a flight.**

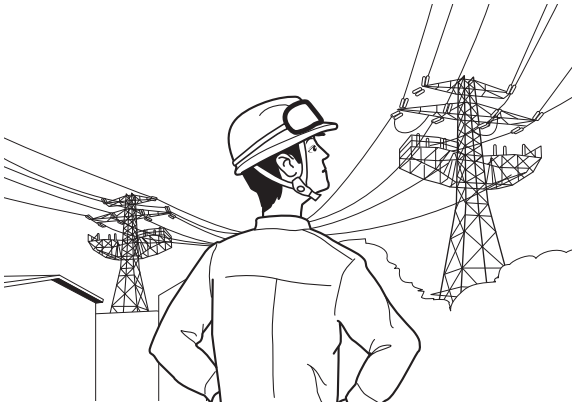

**⚠ WARNING**

**Select areas that are appropriate for takeoffs and landings, as described below. Failure to select an appropriate area could lead to an accident.**

- **Select flat farm roads or vacant lots with minimal foot or vehicle traffic.**
- **Check that there are no obstacles in the vicinity.**
- **Check that there are no objects that could fly up with the wind (such as mowed grass, plastic tape, plastic bags, etc.).**

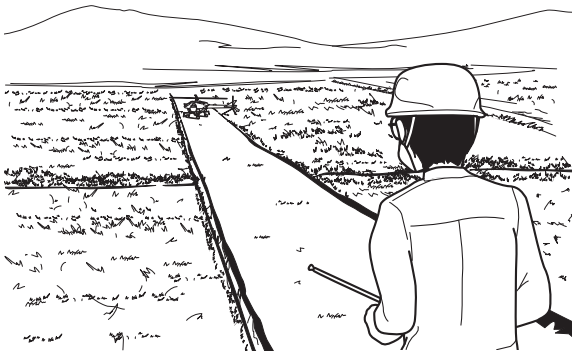

**⚠ WARNING**

**Cancel a flight or aerial application plan if poor weather conditions exist as described below. Failure to do so could pose operation difficulties, which could lead to an accident, and could adversely affect the application and the effectiveness of the sprayed chemicals.**

- **Wind velocity in excess of 3 m/s at a height of 1.5 meters above the ground.**
- **Rain, fog, or lightning in the vicinity.**

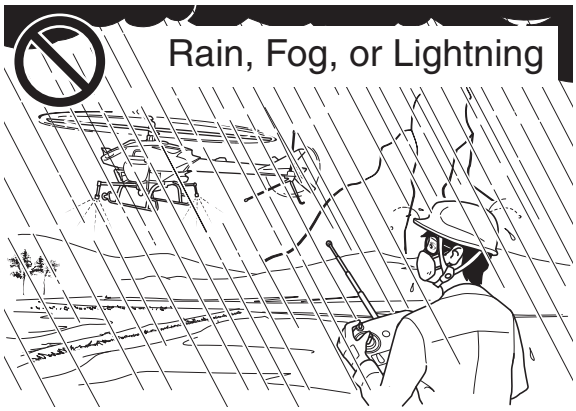


**⚠ WARNING**

**Keep the maximum horizontal distance between the operator and the helicopter within 150 meters. Keep the height of the helicopter between 3 and 4 meters from the ground or the crop. If the distance is any greater, it will prevent the operator from monitoring the posture of the helicopter and adversely affect signal reception.**
**For safety, further shorten the distance if there are any obstacles in the area.**
**Failure to fly the helicopter within the maximum distance limit could lead to an accident.**

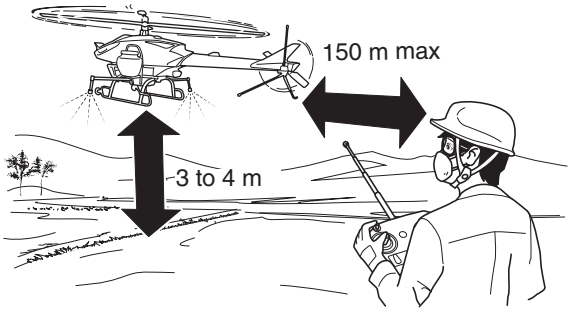

**⚠ WARNING**

**Adjust the load to leave some leeway in payload. A takeoff with the maximum payload requires maximum horsepower and careful flying technique. An excess payload at this point could lead to a serious accident. Therefore, hover the helicopter to check that there is an ample margin in payload before continuing with the flight.**

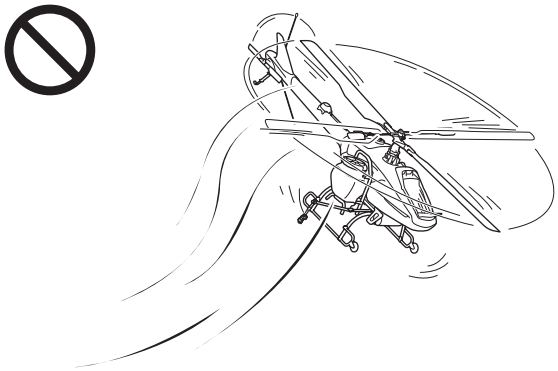

**⚠ WARNING**

**If, during a flight, the warning lamp indicates an abnormal condition or the helicopter exhibits an abnormal behavior or symptom (vibration, sound, coolant leakage, foul odor, etc.), immediately land the helicopter in a safe area. Failure to discontinue the flight can lead to an accident.**

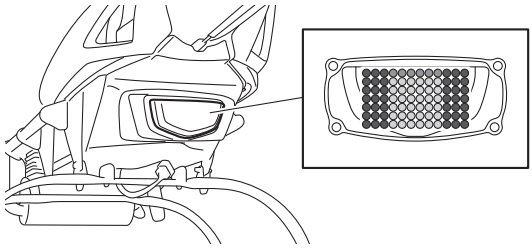

**⚠ WARNING**

**Bring the following items with you to the flying site.**
**Failure to do so could adversely affect the flight and lead to an accident.**

- **Radio signal monitor (sold separately)**
- **Fire extinguisher**
- **First-aid kit**
- **Stopwatch**
- **Tools**
- **Fuel**
- **Helmet (for all personnel)**
- **Spare battery**
- **Transceiver**
- **Flight log**
- **Operation Manual**
- **Proficiency certificate**
- **Particle mask**
- **Goggles**

**NOTICE**

**To fly two or more helicopters simultaneously in the same area,**

**① Do not use the same frequency.**

**② The maximum distance between the operator and the helicopter should be 150 meters.**

**③ Keep a minimum distance of 200 meters between helicopters.**

**Be sure to adhere to the requirements above.**

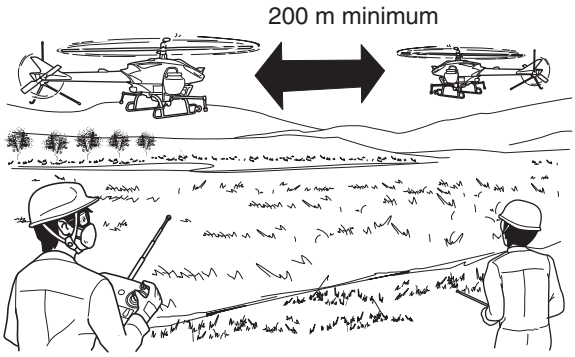


## Chemical requirements

**⚠ WARNING**

**Do not use chemicals other than those that have been registered for use with unmanned helicopters. Failure to do so could expose animals, plants, or people to chemicals for which the operator will be required to take social responsibility.**

**⚠ WARNING**

**Control and handle chemicals strictly in accordance with their manuals. Failure to control or improper handling could lead to chemical pollution or health hazards.**

# Product Specifications

Specification Data ..... 2-1

Data list ..... 2-1
Dimensions ..... 2-2

# Product Specifications

## Specification Data

### Data list

| | | | |
|---|---|---|---|
| Product name | | | FAZER |
| Manufacturer model | | | L35 |
| Perfor-mance | Chemical payload | | 24 kg |
| | Practical distance (visual range) | | 150 m |
| Engine | Type | | 4-stroke per cycle, horizontally opposed 2-cylinder |
| | Cylinder displacement | | 390 cc |
| | Maximum output | | 19.1 kw (26 ps) minimum/6,000 rpm |
| | Maximum torque | | 32.5 N·m (3.3 kg·m)/4,500 rpm |
| | Cooling | System | Water-cooled |
| | | Specified coolant | Mixture of Yamaha Long-Life Coolant and water |
| | | Mixing ratio | 1 part Yamaha Long-Life Coolant to 1 part water |
| | Lubrication | System | Force-feed wet sump |
| | | Specified oil | Yamalube Standard Plus: SAE 10W-40 |
| | Starting system | | Electric starter |
| | Fuel | Type | Regular gasoline |
| | | Tank capacity | 5.0 liters |
| Electrical | Control system | Name | YACSⅡ |
| | | Warning system | Warning lamp/self monitor |
| | | Warnings | Low fuel level, excess load, radio signal interference, speed warning, etc. |
| | Radio signals for piloting | | 72.690 /.710 /.730 /.770 /.790 /.810 /.850 /.890 /.910 /.950 MHz |
| | Radio signals for sprayer *1 | | 26.995 /27.045 /27.095 /27.145 /27.195 /27.255 MHz |
| | Battery | Helicopter | VRLA (valve-regulated lead acid) battery YTZ7S(F) 12 V, 6 Ah |
| | | Transmitter | Lithium-ion battery 7.4 V, 2,450 mAh |
| | Ignition plug | | NGK CPR7EA |
| Helicopter dimensions | Main rotor diameter | | 3,115 mm |
| | Tail rotor diameter | | 550 mm |
| | Overall length/overall length with rotors | | 2,782 mm/3,665 mm |
| | Overall width | | 770 mm |
| | Overall height | | 1,078 mm |

*1 Transmitter for sprayer is sold separately.

## Dimensions

Unit: mm

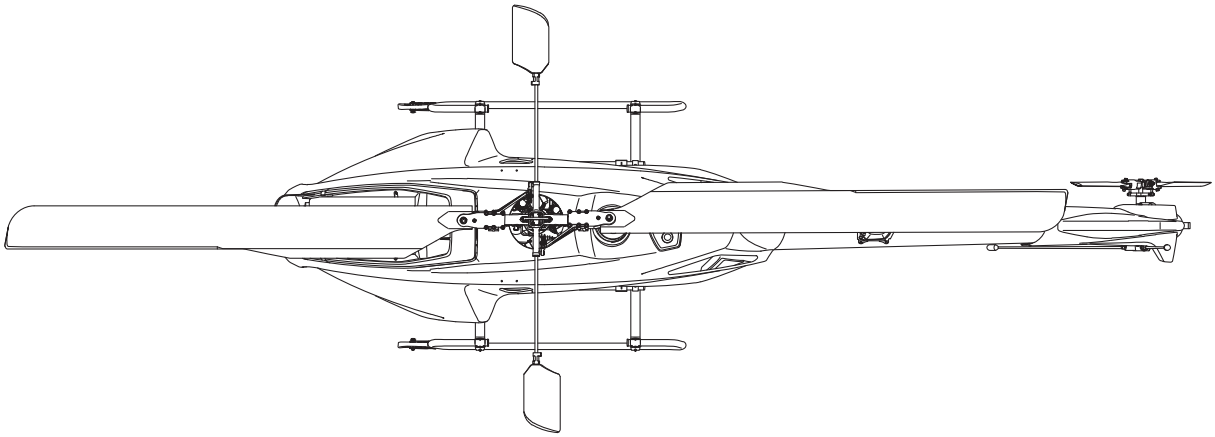

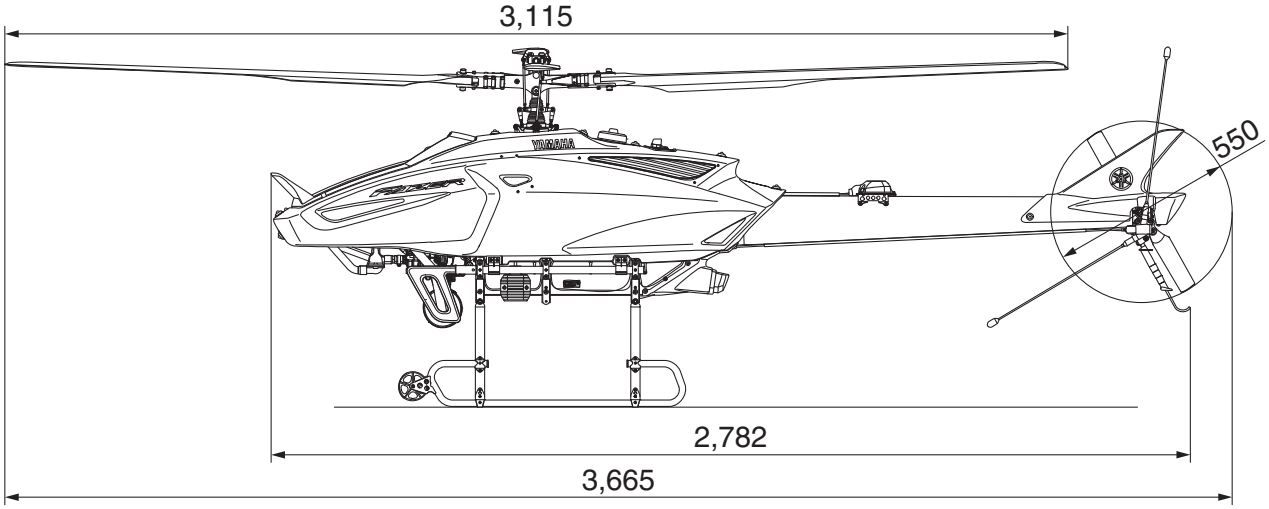


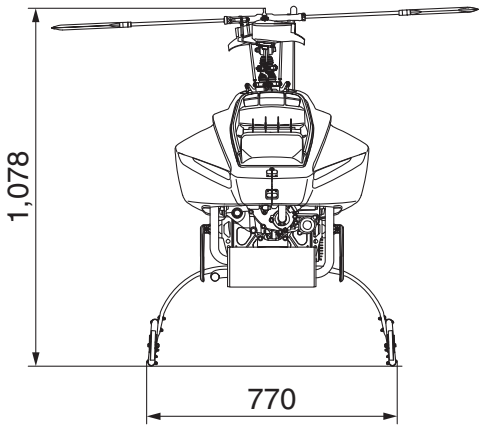

# Part Names and Functions


Helicopter Exterior ..... 3-1

Helicopter exterior parts names ..... 3-1
Control panel, warning lamp, and self monitor ..... 3-2

Helicopter Interior Parts ..... 3-3

Flight Transmitter ..... 3-4

Basic Transmitter Operation ..... 3-5

Flight transmitter stick basic operation and helicopter movement ..... 3-5
Flight transmitter trim lever basic operation and helicopter movement ..... 3-6
GPS switch ..... 3-7
Spray switch ..... 3-8
Frequency settings and checks ..... 3-8
Transmitter battery monitor lamp ..... 3-9

Various Types of Warning (Warning, Indication) and Actions ... 3-10

Self monitor ..... 3-10
Warning lamp ..... 3-11

Safe Functions During Failsafe Mode
(Radio Signal Interference) ..... 3-13

Safety Functions and Actions in Case GPS Reception
Becomes Poor While Flying Under Speed Control ..... 3-16

# Part Names and Functions

## Helicopter Exterior

### Helicopter exterior parts names

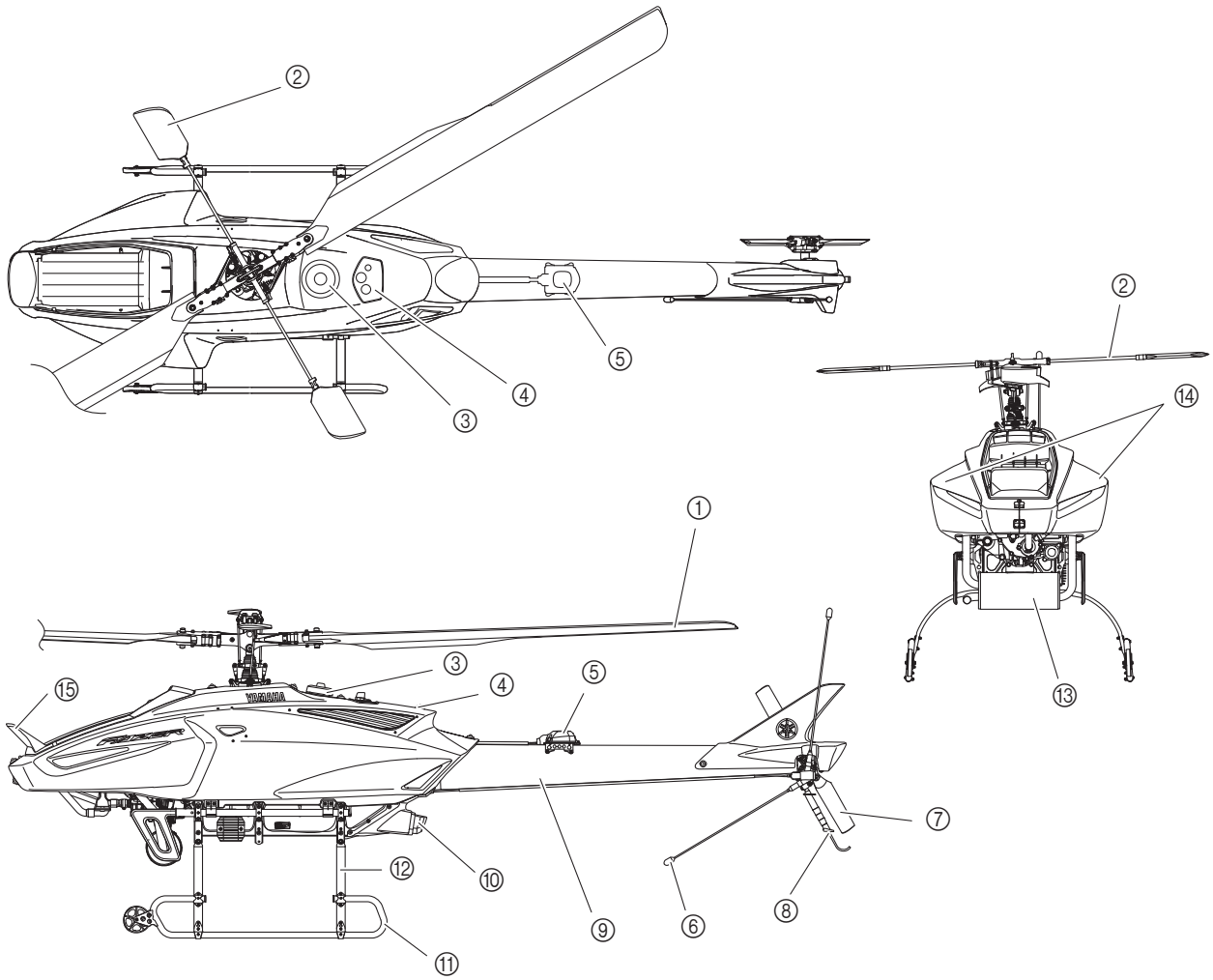


| No. | Name | Function |
|---|---|---|
| ① | Main rotor | Generates main lift and propelling force. |
| ② | Stabilizer | Stabilizes the helicopter by way of the inertial and aerodynamic forces created by the rotating right and left weights (stabilizer blades). |
| ③ | Fuel tank cap | A fuel tank cap with air release function. |
| ④ | Control panel | A panel for starting and controlling the engine. |
| ⑤ | GPS/gyro sensor | Receives GPS radio signals. / Detects the Earth's magnetic field. |
| ⑥ | Antenna (72 MHz band) | Receives radio signals from the transmitter. |
| ⑦ | Tail rotor | Prevents the helicopter from rotating in reaction to the rotation of the main rotor, thus effecting control in the heading direction. |
| ⑧ | Stone guard | A handle to be grasped when transporting the helicopter on land. Also, a portion that is held by hand or stepped by foot while attaching a transport wheel onto the runner. |
| ⑨ | Tail body | Connects the helicopter body with the tail rotor, and houses a driveshaft and the like. |
| ⑩ | Warning lamp | Indicates the conditions of the helicopter by way of how the lamp illuminates. |
| ⑪ | Runner | Supports the helicopter. |
| ⑫ | Leaf | |
| ⑬ | Muffler | Muffles and minimizes the exhaust sound of the engine. |
| ⑭ | Side cover | Protects the main components, including the engine. |
| ⑮ | Radiator cover | Directs the cooling air to the radiator. |

# Control panel, warning lamp, and self monitor

## Control panel

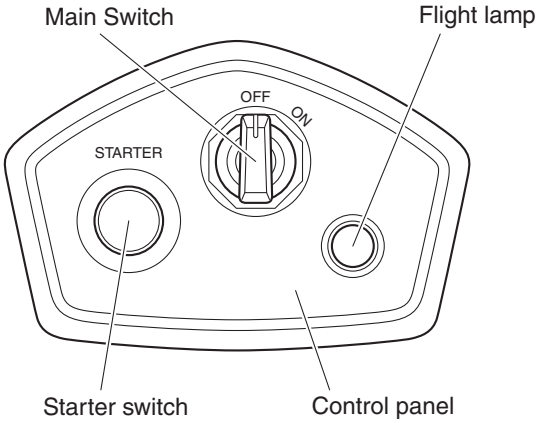


## Warning lamp

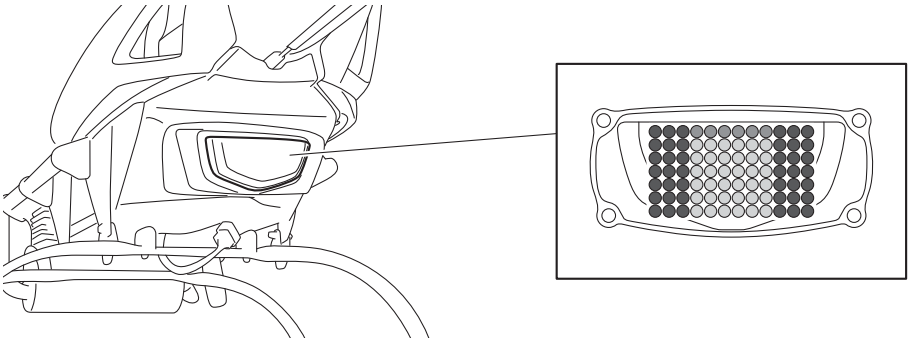

## Self monitor

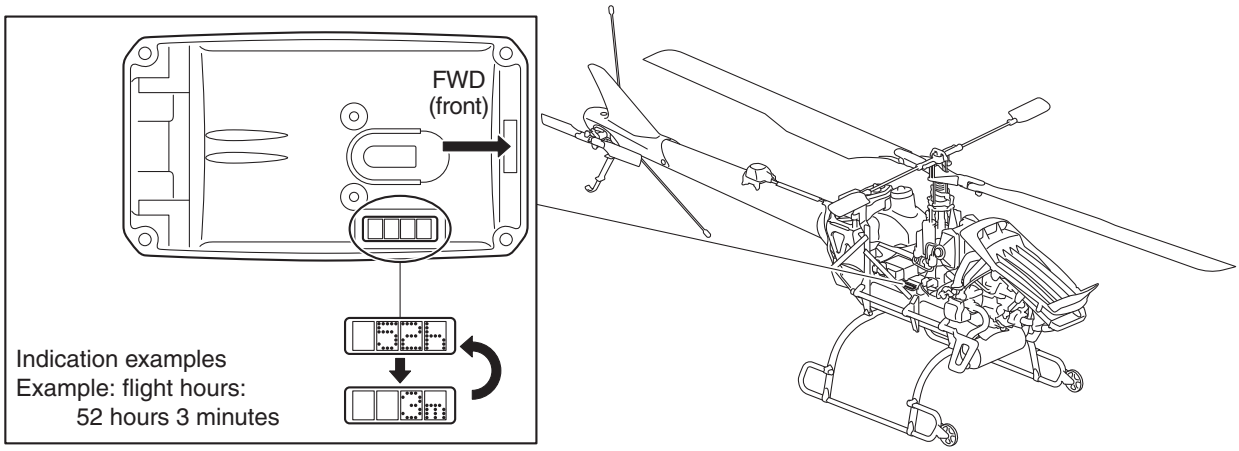

# Helicopter Interior Parts

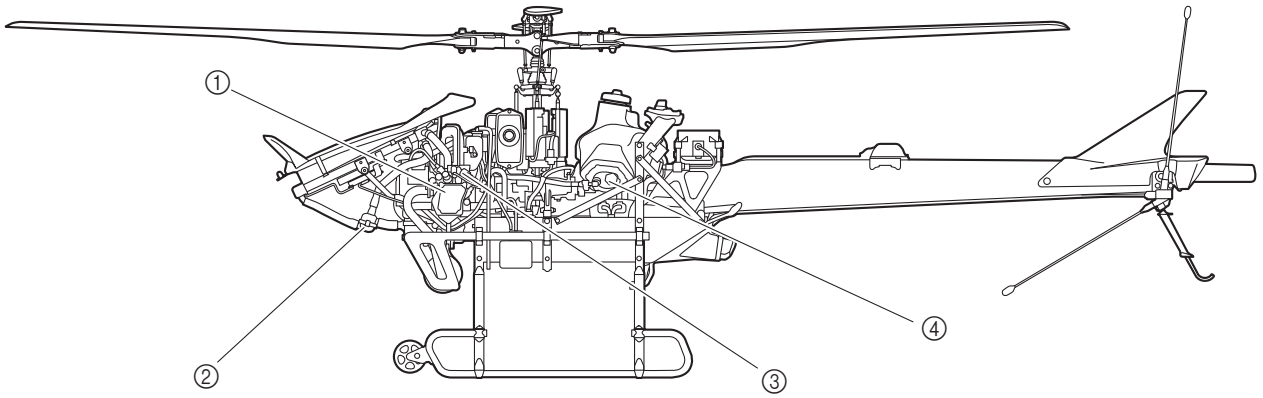


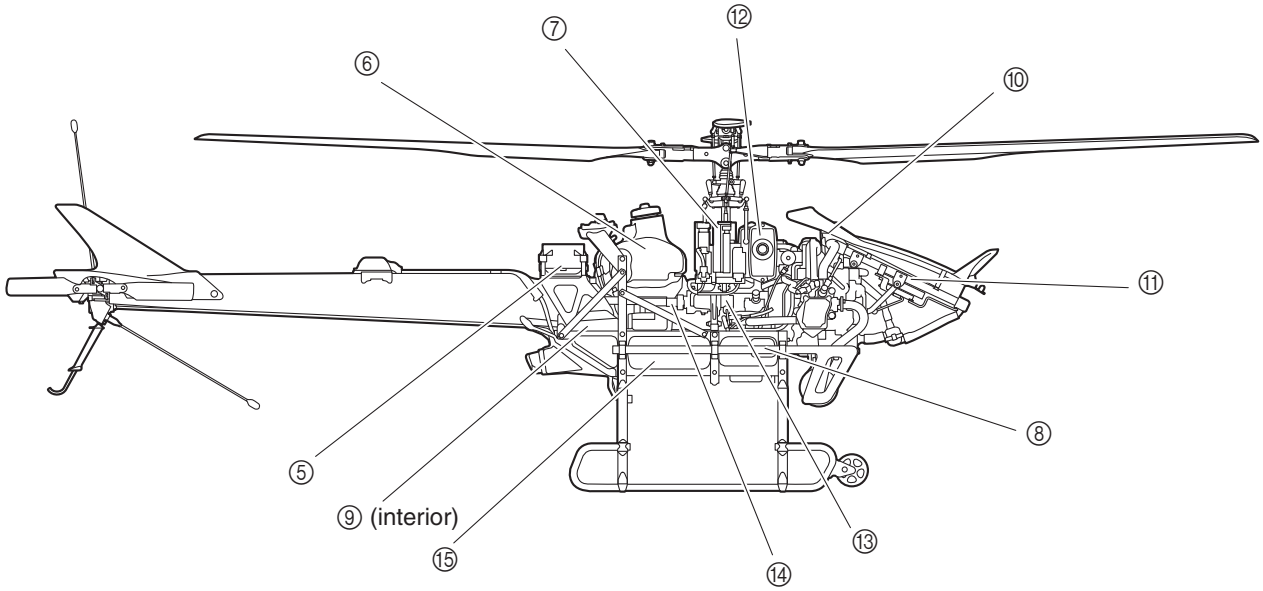


| No. | Name | Function |
|---|---|---|
| ① | Engine | The motive force that moves the helicopter. |
| ② | Thermostat | A device to automatically regulate the water temperature. |
| ③ | Injector | A device to inject fuel into the engine. |
| ④ | Fuel pump | A device to pump fuel from the fuel tank. |
| ⑤ | Control unit | Detects the postural changes of the helicopter. |
| ⑥ | Fuel tank | A tank to store fuel. |
| ⑦ | Slide servo | A servo to control the angle of the main rotor. |
| ⑧ | Throttle servo | A servo to control the engine power output. |
| ⑨ | Rudder servo | A servo to control the angle of the tail rotor. |
| ⑩ | Radiator cap | A cap at the inlet for pouring coolant into the radiator. |
| ⑪ | Radiator | A device to dissipate heat from the engine coolant. |
| ⑫ | Air cleaner | A device to remove dust from the air intake of the engine. |
| ⑬ | Transmission | Consisting of speed gears and drive shaft, this is a speed-reduction device that transmits the motive force from the engine to the main rotor shaft and the drive shaft. |
| ⑭ | Tail drive shaft | A shaft to transmit the motive force from the transmission to the tail transmission. |
| ⑮ | Frame | A framework that supports the helicopter. |

# Flight Transmitter

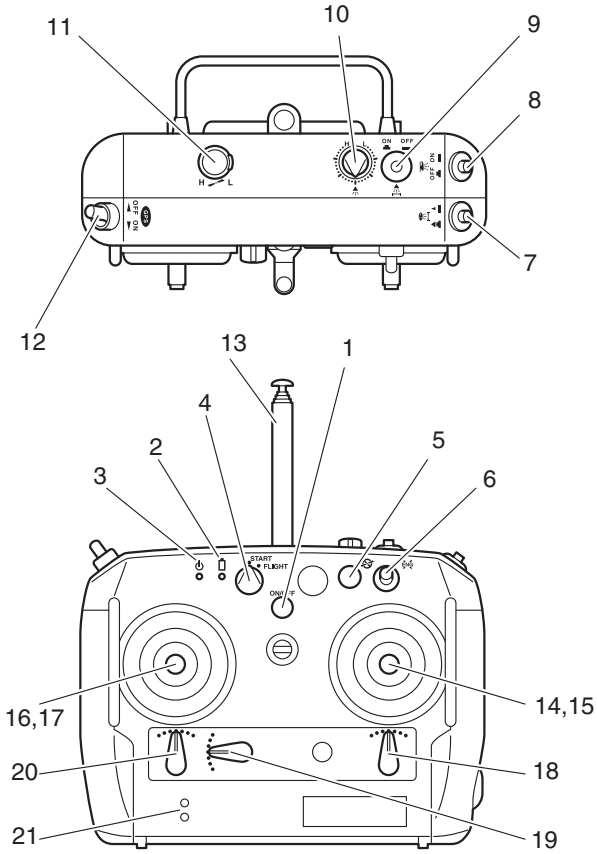


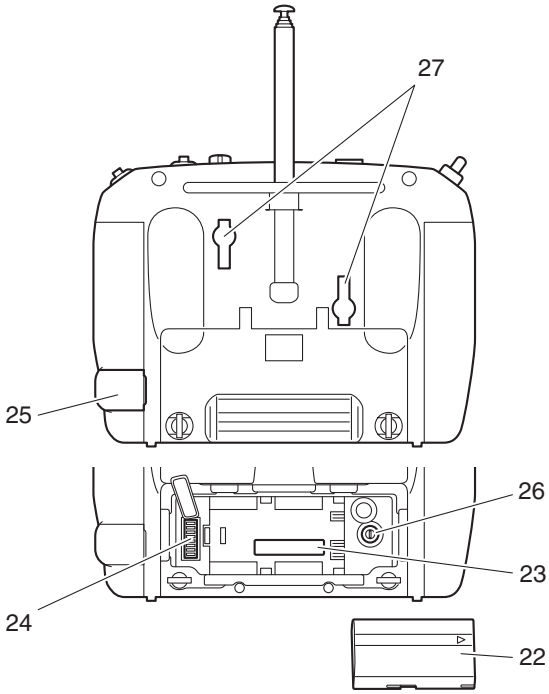


**⚠ WARNING**

This has been properly adjusted at the factory.
It should not be tampered by the user.
Failure to heed this precaution can lead to accidents.

| No. | Name | Function |
|---|---|---|
| 1 | Power switch | This switch is for turning the transmitter power ON and OFF. |
| 2 | Battery monitor lamp | Indicates the state-of-charge of the transmitter battery by its color. |
| 3 | Output lamp | Indicates the output conditions of the radio signals. |
| 4 | Flight switch | A switch to select START and FLIGHT. |
| 5 | Rotor brake switch | A switch to quickly stop the main rotor after the engine has been stopped. |
| 6 | Engine stop switch | A switch to stop the engine. |
| 7 | Spray volume switch | A switch to select the spraying width of the liquid or granular sprayer. |
| 8 | Spray switch | A switch to turn the sprayer ON and OFF. |
| 9 | Speed-linked spray switch | A switch to turn ON/OFF the function to adjust the spray volume that suits the flight speed while receiving GPS signals. |
| 10 | Liquid volume knob | A knob to adjust the speeds of the liquid sprayer pump motor or the granular spinner motor. |
| 11 | Rotor speed adjustment knob | A knob to change the speed of the main rotor. |
| 12 | GPS switch | While receiving 4 or more GPS signals, this switch enables the helicopter to fly at a constant speed. |
| 13 | Antenna | Transmits radio signals. |
| 14 | Throttle stick | A stick to control the ascent and descent of the helicopter. |
| 15 | Aileron stick | A stick to control the right and left tilt of the helicopter. |
| 16 | Elevator stick | A stick to control the front-back tilt of the helicopter. |
| 17 | Rudder stick | A stick to control the horizontal rotation of the helicopter. |
| 18 | Aileron trim lever | A lever that minutely controls the right and left tilt of the helicopter. |
| 19 | Elevator trim lever | A lever that minutely controls the front-back tilt of the helicopter. |
| 20 | Rudder trim lever | A lever that minutely controls the horizontal rotational movement of the helicopter. |
| 21 | Warning speaker | Emits a sound to warn you of the battery state-of-charge or the like. |
| 22 | Battery | It is a lithium-ion battery. |
| 23 | Serial No. | A unique number for the transmitter. |
| 24 | Function selector switch | Not used. |
| 25 | Setup plug hole | Not used. |
| 26 | Frequency selector switch | A switch to change the operating frequency. |
| 27 | Blind plug for adjusting stick operability | Not used. |

# Basic Transmitter Operation

## Flight transmitter stick basic operation and helicopter movement

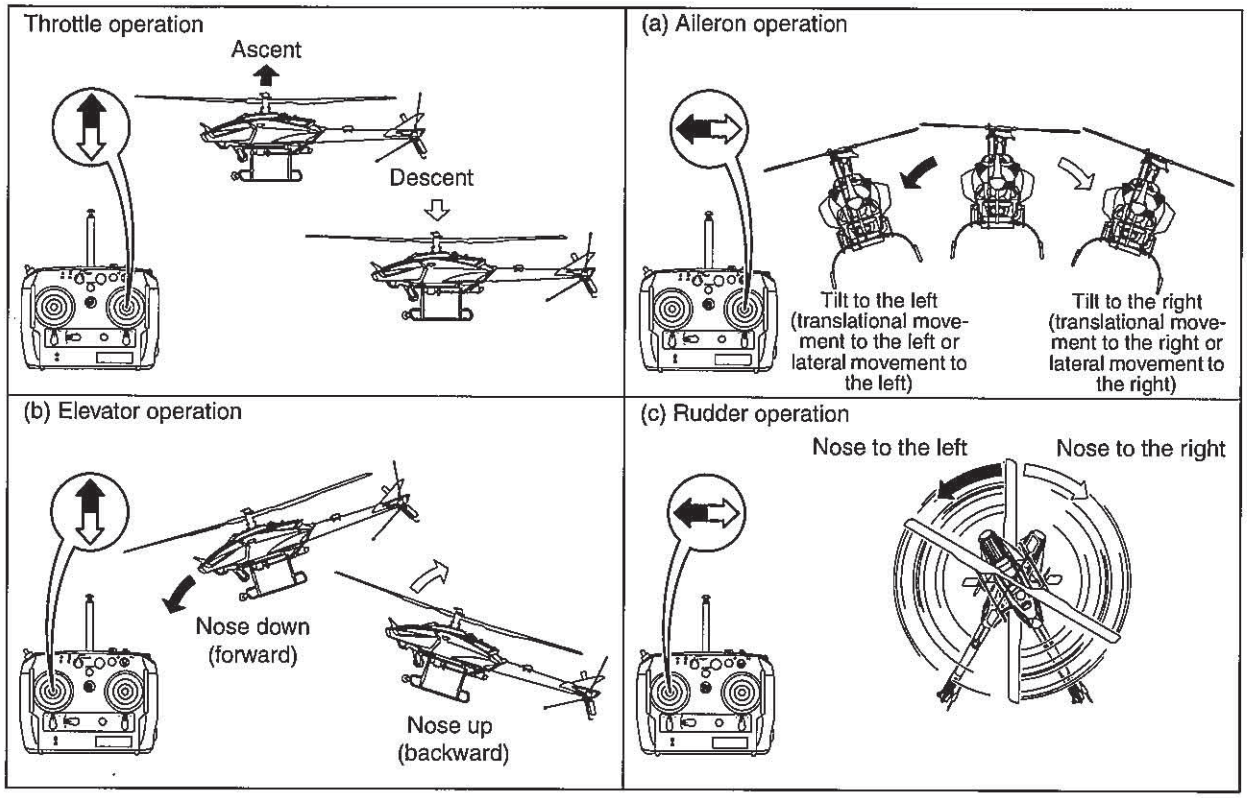


**THE FOLLOWING STATEMENT APPLIES TO THE RECEIVER (FOR U.S.A.)**

This device complies with part 15 of the FCC rules. Operation is subject to the following two conditions:
(1) This device may not cause harmful interference, and
(2) This device must accept any interference received, including interference that may cause undesired operation.

# Flight transmitter trim lever basic operation and helicopter movement

(a) Aileron trim lever

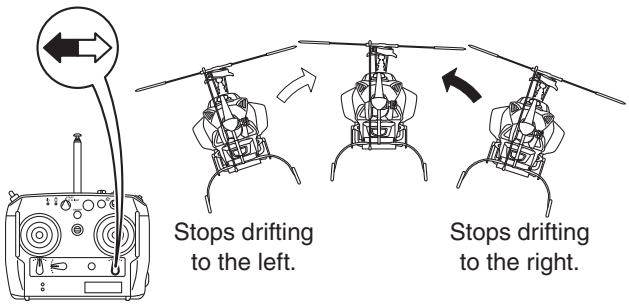


(b) Elevator trim lever

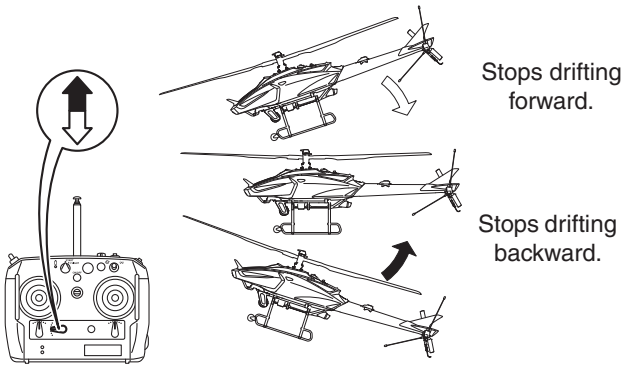


(c) Rudder trim lever

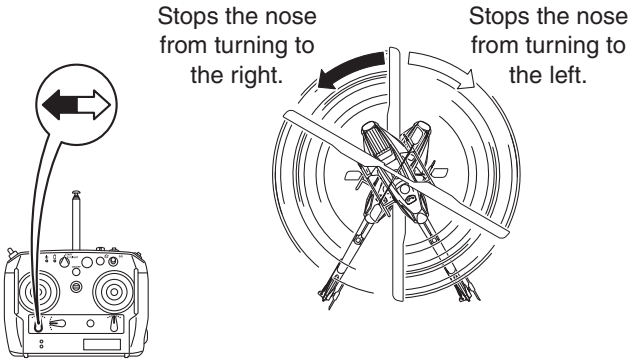


**TIP**

- **The neutral position is the standard position for the aileron, elevator, and rudder trim levers.**
- **Make fine adjustments in accordance with the conditions.**

# GPS switch

Turning the GPS switch ON enables helicopter speed control through the use of the GPS function (to maintain a constant flight speed).
The GPS switch can be used while it is turned ON before takeoff. The flashing of the yellow warning lamp indicates that the reception of the GPS signals is poor, and the speed control function is unusable.
In the situation indicated below, momentarily turn the switch OFF; then, turn it back ON. Otherwise, you will not be able to use the speed control flight mode.

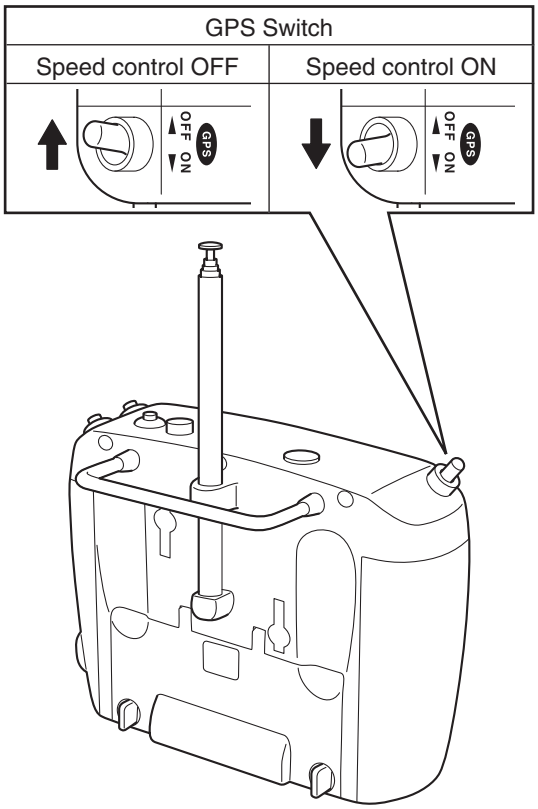


| Indications | Indication conditions | Indication meanings | Actions |
|---|---|---|---|
| Yellow lamp 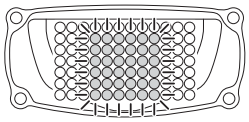 | Regular flashing | Unable to effect speed control<br>Poor GPS signal reception | Able to fly under postural control |

***NOTICE***

- **If a failure occurs in postural control, it switches to manual operation and disengages the speed control.**
- **Even if GPS signals are being received, the accuracy of the radio signals from the satellites may be poor.**
  **In that case, the helicopter might move front-back, side-to-side, or up and down. When this happens, quickly turn the GPS switch OFF.**
  **To use the speed control again, wait a while before turning the GPS switch ON.**

## Spray switch

When the flight transmitter is powered ON and the helicopter main switch is in the ON position, the sprayer can be operated.
When the flight transmitter's spray switch (ON/OFF switch) is pressed ON, the sprayer operates. Pressing it again (to release), the sprayer stops.

| TIP |
|---|
| **When you press the spray switch ON, be mindful of the surroundings because the sprayer will spray agricultural chemicals.** |

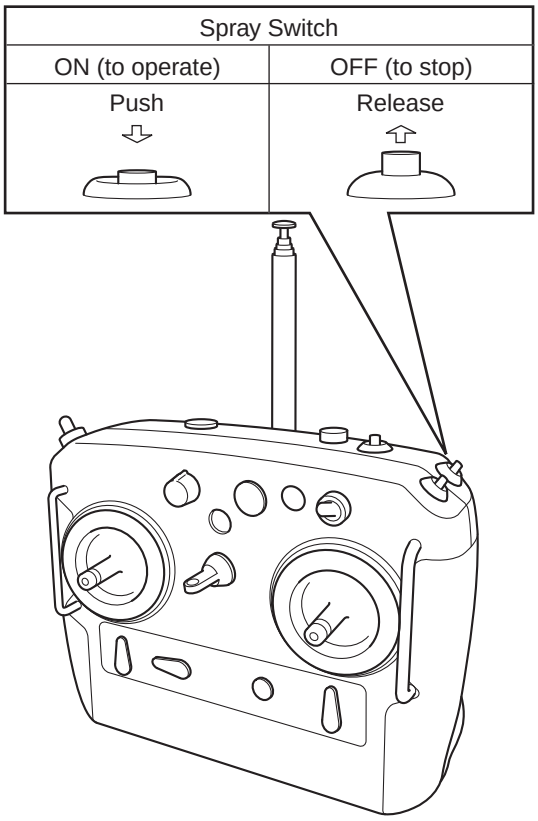


## Frequency settings and checks

### How to select frequencies

Select the frequency for the helicopter by turning the frequency selector switch as shown.
Before making a selection, be sure the transmitter's power switch is OFF.
Radio signals are assigned to numbers 0 to 6.
Do not turn the switch to number 7 and beyond.

### Frequency checks

Use a radio signal monitor (sold separately) to make sure there are no radio signals being used in the vicinity. Then, turn ON the transmitter's power switch.
Use a radio signal monitor (sold separately) to check that the selected radio signals are being output.

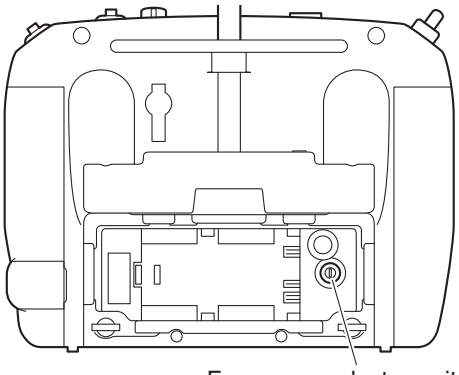


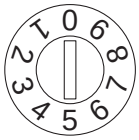


| Number | Frequency |
|---|---|
| 0 | 72.69 MHz |
| 1 | 72.71 MHz |
| 2 | 72.73 MHz |
| 3 | 72.77 MHz |
| 4 | 72.79 MHz |
| 5 | 72.81 MHz |
| 6 | 72.85 MHz |
| 7 | 72.89 MHz |
| 8 | 72.91 MHz |
| 9 | 72.95 MHz |

# Transmitter battery monitor lamp

① Battery state-of-charge inspection
With the helicopter's main switch turned OFF, turn the transmitter's power ON, and inspect the following items.

- Check that the output lamp and the battery monitor lamp are illuminated green.
- Check the number of times the buzzer sounds to indicate the battery state-of-charge.

| | | |
|---|---|---|
| Beep beep beep beep | (4 times) | The battery is fully charged. |
| Beep beep beep | (3 times) | The battery needs to be charged. |
| Beep beep | (2 times) | The helicopter cannot be used unless the battery is charged. |

Check whether the battery monitor lamp is lit.
The battery monitor lamp works in unison with the buzzer sound that indicates the battery state-of-charge.
When the battery gets low, the battery monitor lamp will start flashing red. When the battery gets even lower, the lamp will stay lit.
At this point, working in unison with the transmitter's monitor lamp, the warning lamp flashes red to warn the operator. When this happens, it means that the battery is practically drained. Therefore, replace it with a fully charged battery.

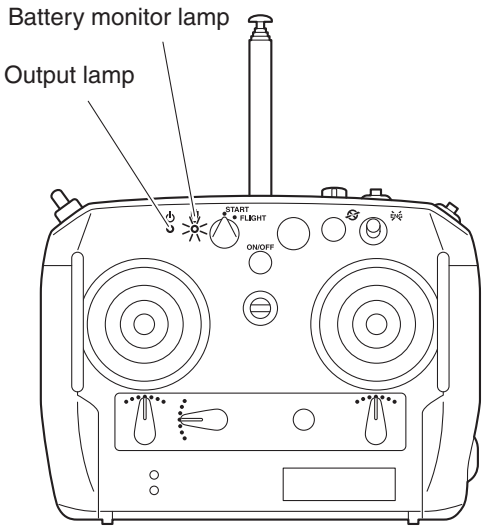


* On the FAZER, the red lamp of the helicopter warning lamp flashes to inform the operator that the transmitter's battery state-of-charge is low during flight. (Refer to page 3-12.)

# Various Types of Warning (Warning, Indication) and Actions

This product is equipped with various types of safety functions. Before flight, familiarize yourself thoroughly with these functions, warnings, and indications so that you can take appropriate actions.

## Self monitor

- Normally when the main switch is turned ON, the self monitor displays the total flight time to the present time, in the order from □□□□ → □□□□.

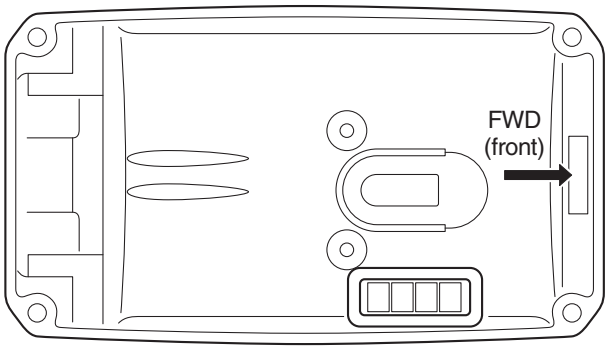


- An error number appears if any type of malfunction is discovered in the helicopter when the main switch is turned ON or while the helicopter is in flight.
  Most of these malfunctions cannot be fixed by the user on the spot. Contact your dealer with the error number that has appeared, and inquire about the actions that should be taken.
  These indications will appear repeatedly until the main switch is turned OFF.

(Indication examples)
E116: Helicopter power failure

# Warning lamp

## «Standing by on ground»

| Indications | Indication conditions | Indication meanings | Actions |
|---|---|---|---|
| Red lamp 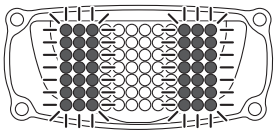 | Irregular flashing<br>Putt-putt···<br>Putt-putt··· | A helicopter failure or malfunction. | Check the error indicated on the self monitor and request the dealer for a repair. |
| | Regular flashing | • The remaining fuel is below the specified amount.<br>• Transmitter battery low voltage warning. | • Refuel.<br>• Replace the transmitter battery. |
| Yellow lamp 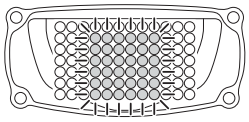 | Flashing | Unable to effect speed control<br>Poor GPS signal reception. | Able to fly under postural control. |
| Blue lamp 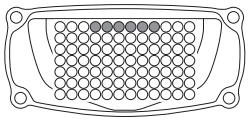 | Illuminating | Engine speed limit tripped. (Transmitter's flight switch is in START position.) | Turning the transmitter's flight switch to FLIGHT will extinguish the blue lamp and enable the helicopter to fly. |
| Red, yellow, blue lamps 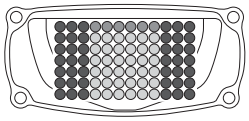 | All color illumination | Control instruments being configured. | Check whether the LED lamp has an open circuit.<br><br>Stand by until the system configuration is completed. |
| Red and yellow 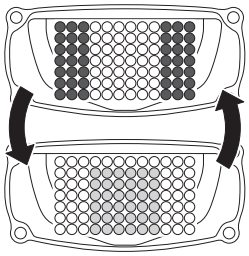 | Rapid alternating illumination | The failsafe function has been tripped due to a failure in receiving operating radio signals. | Check the transmitter-receiver. |

| Flight lamp | Indication conditions | Indication meanings | Actions |
|---|---|---|---|
| 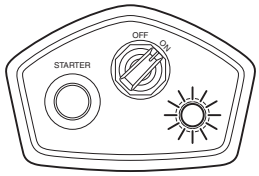  | Irregular flashing<br>Putt-putt···<br>Putt-putt··· | The helicopter has some type of failure and is unable to fly. | Check the error indicated on the self monitor and request your dealer for a repair. |
| | Regular flashing | • Control instruments being configured.<br>• Pressing the start switch while security is being tripped will cause the lamp to flash. | Stand by until the configuration is completed.<br>Request the dealer to take action on the security matter. |
| | Changes from flashing to turning off. | Control instruments configuration completed. | The lamp will change to illuminate when the engine stop switch is pressed. |
| | Illuminating | Engine can be started. | Press the starter switch to operate the starter motor. |

## «In flight»

When the warning lamps are OFF, there are no malfunctions.
If a failure occurs during flight, the following indications will appear.

| Indications | Indication conditions | Indication meanings | Actions |
|---|---|---|---|
| Red lamp 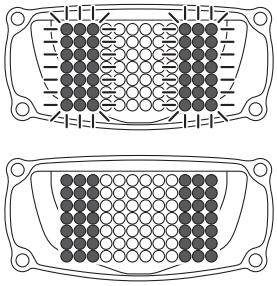 | Irregular flashing<br>Putt-putt···<br>Putt-putt··· | A helicopter failure occurred, requiring emergency landing.<br>A helicopter failure occurred, preventing it from continuing a safe flight. | Perform an emergency landing, check the error indication on the self monitor, and request the dealer for a repair. |
| | Regular flashing | • The remaining fuel is below the specified amount.<br>• Transmitter battery low voltage warning. | • Promptly land the helicopter and refuel.<br>• Promptly land the helicopter and replace the transmitter's battery. |
| | Illuminating | ① Engine speed is low.<br>② A failure occurred in a system that does not affect postural control. (Example: gyro sensor, GPS, sprayer failure, etc.)<br>③ The flight speed exceeds 20 km/h. | ① Improve flight condition, reduce payload, etc.<br>② Check the error indicated on the self monitor and contact your dealer.<br>③ Reduce the speed to below 20 km/h. |
| Yellow lamp 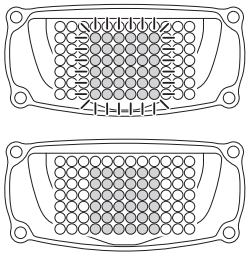 | Irregular flashing<br>Putt-putt···<br>Putt-putt··· | Transferring from speed control to postural control.<br>Poor GPS signal reception. | Able to fly under postural control. See the page on "Safety Functions and Actions in Case GPS Reception Becomes Poor While Flying Under Speed Control". |
| | Regular flashing | Unable to effect speed control. | Able to fly under postural control. |
| | Illuminating | Maintaining speed during flight in speed control mode. | It maintains speed even if you release your finger from the transmitter's elevator stick. To cancel, operate the stick to stop. The yellow lamp will turn off, and the helicopter will hover. |
| Red and yellow 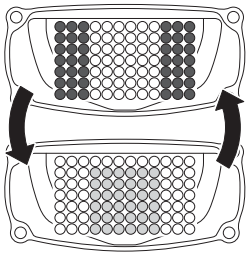 | Rapid alternating illumination | The failsafe function has been tripped due to a failure in receiving operating radio signals. | When the helicopter enters the failsafe mode, it will descend automatically.<br>See the page regarding the failsafe mode. |

# Safe Functions During Failsafe Mode (Radio Signal Interference)

If the radiowaves for operating the helicopter does not reach the helicopter due to some kind of failure, the helicopter becomes inoperable, which is very dangerous. When a radiowave interference occurs, the safe function will cause the red and yellow warning lamps to rapidly illuminate alternately, and automatically effect the controls (operations) described in the next page and thereafter. Familiarize yourself with this function thoroughly, and take appropriate actions.

**⚠ DANGER**

**During radio signal interference, never approach the helicopter until the main rotor stops rotating completely, and the engine has come to a complete stop. If there are any people in the area, promptly instruct them to go away.**

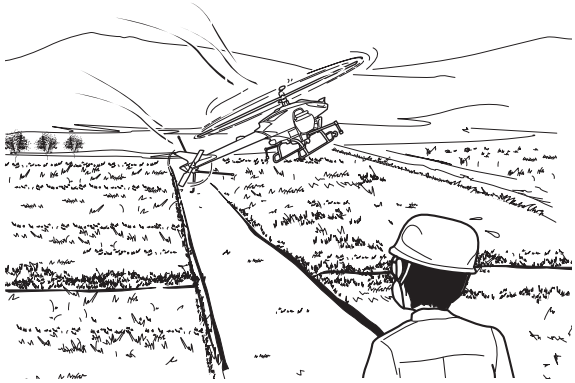

**⚠ WARNING**

- **Do not fly at high altitudes higher than 3 to 4 meters (above ground or crop). In the failsafe mode, the engine will stop automatically after the allowable time, which has been preset for safety, has elapsed. Flying at an altitude that is higher than necessary will cause the helicopter to drop suddenly during an automatic descent in the failsafe mode.**
- **The automatic control in the failsafe mode varies depending on the GPS reception conditions (see the next page and thereafter).**
- **Be sure to adhere to the indicated "Actions". Failure to take appropriate actions can cause the helicopter, after recovering from a radio signal interference, to make an unexpected move or sudden descent, which can lead to accidents.**
- **Verify the cause of the radio signal interference, and never perform subsequent flights until the cause has been eliminated. Failure to observe this precaution can cause the helicopter to become inoperable again, which can lead to accidents.**

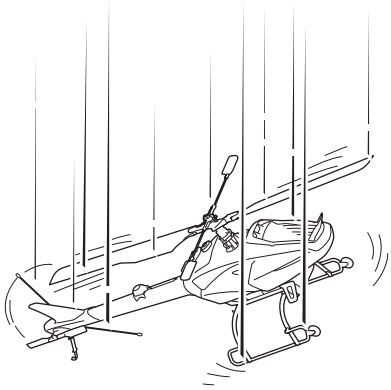

- **Automatic control (operation) in the failsafe mode when GPS reception is favorable**

① When a radio signal interference occurs, the red and yellow warning lamps will rapidly illuminate alternately, and automatically effect brake control. The helicopter will hover (for approximately 10 seconds), and will automatically start a slow descent.
If the operating radio signals recover during the descent, the control will switch automatically to operator operation. Therefore, calmly set the sticks on the transmitter to their neutral (center) position, and wait for the recovery.

② If the helicopter makes an emergency landing because the radio signals did not recover, the engine will stop approximately 15 seconds later.
The helicopter could topple, depending on the terrain on which it has descended, weather conditions, or flight conditions. If the helicopter topples, never approach it until the engine has come to a stop.

③ After the emergency landing, place the throttle stick in its slowest position, and wait for the radio signals to recover or the engine to stop.

④ If the radio signals remain unrecovered after the failsafe mode (radio signal interference) is tripped, and the helicopter cannot determine whether it has landed, the engine will stop automatically approximately 60 seconds later.
Wait until the main rotor completely stops rotating before approaching the helicopter and turning the main switch OFF.

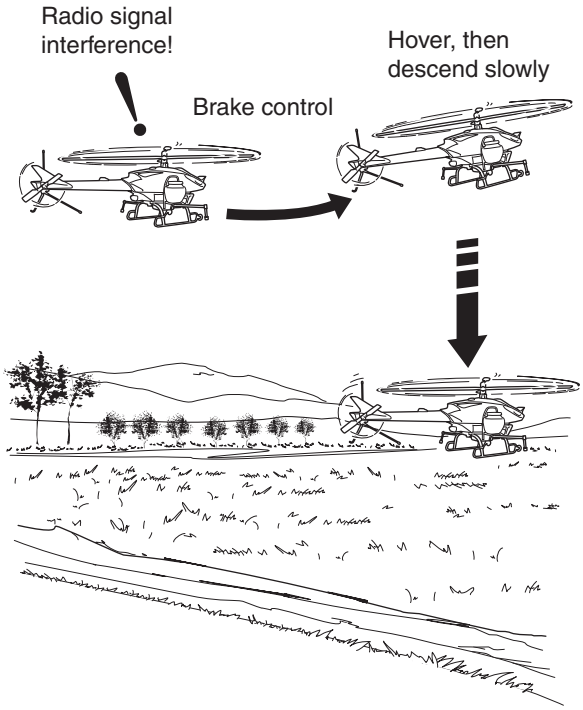

- **Automatic control (operation) in the failsafe mode when GPS reception is poor**

① When radio signal interference occurs, the red and yellow warning lamps illuminate alternately at a quick pace, and the system forces the helicopter to descend rapidly. If the operating radiowaves recover during descent, the control will switch automatically to operator control. Therefore, calmly set all the sticks on the transmitter in their neutral (center) position and wait for the recovery.

② If the helicopter makes an emergency landing because the radio signals did not recover, the engine will stop in approximately 10 to 15 seconds.
The helicopter could topple, depending on the terrain on which it has descended, weather conditions, or flight conditions. If the helicopter topples, never approach it until the engine has come to a stop.

③ After the emergency landing, place the throttle stick in its slowest position, and wait for the radio signals to recover or the engine to stop.

④ If the radio signals do not recover after 15 seconds have elapsed from the time the failsafe mode (radiowave interference) has been tripped, the engine will stop automatically even if the helicopter does not make an emergency landing.

⑤ If the helicopter makes an emergency landing, wait until the main rotor stops rotating before approaching the helicopter and turning the main switch OFF.

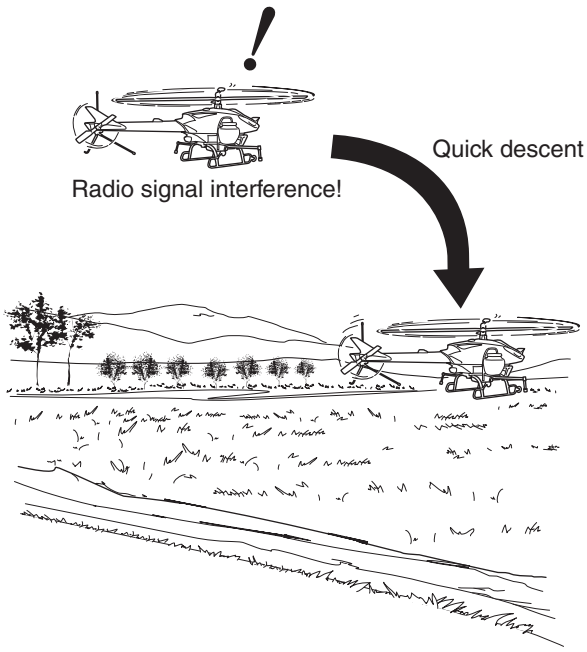

# Safety Functions and Actions in Case GPS Reception Becomes Poor While Flying Under Speed Control

The GPS-based speed control functions by receiving radio signals from 4 or more satellites. This control might become unusable, depending on the surrounding environment, terrain, weather conditions, time of the day, or other reasons.
If GPS reception becomes poor while using the GPS-based speed control flight mode, the safety function will cause the yellow warning lamp to flash irregularly, automatically effecting the control (operation) or switching the flight mode as described below. Thoroughly familiarize yourself with this function, and take appropriate actions.

When GPS reception becomes poor, the yellow warning lamp will flash irregularly at the same time. After the flight mode switches completely to postural control, the yellow lamp will change from irregular flashing to regular flashing. After that, the control will transfer smoothly from speed control to postural control.

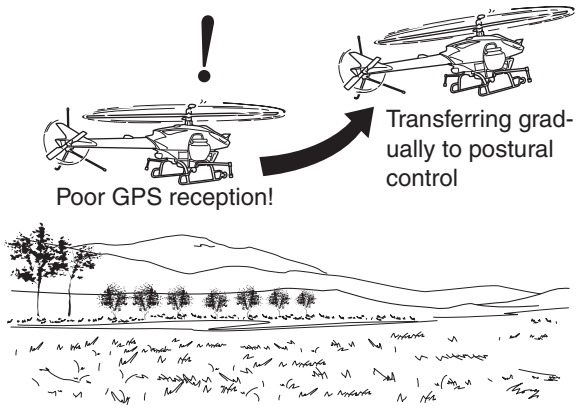


| *NOTICE* |
| --- |
| **If the yellow lamp transfers to regular flashing, the flight mode will not revert to speed control even if GPS reception improves. It will revert if the GPS switch is turned back ON after GPS reception improves.**<br>**ON → OFF → ON** |

The reception of GPS radiowaves can become poor due to the conditions described below or other reasons.

① Presence of obstacles near the location of the flight, such as mountains, trees, or buildings.

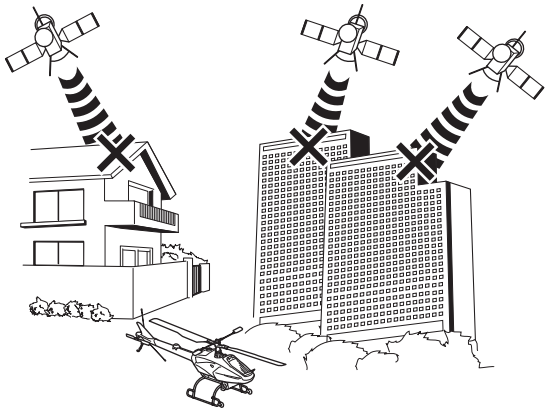

② There are people around the antenna.

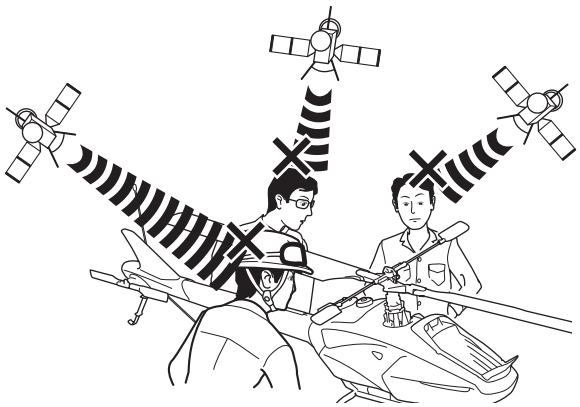

③ The number of satellites transmitting radio signals diminishes, because of the time of the day.