T16IZ

Digital Proportional R/C System

S.BUS2

SHORT MANUAL

This manual is a simplified version. Details of the function are not described. Refer to country distributor WEB for detailed function explanation.

http://www.futabausa.com

(http://www.rc.futaba.co.jp/english)

Futaba®

Digital Proportional R/C System

1M23N36602

TABLE OF CONTENTS

●Introduction 3
●Support and Service 3
●Application, Export, and Modification 3
●Compliance Information Statement 4
●Definitions of Symbols 5
●Safety Precautions (do not operate without reading) 6
●Features 9
●Contents and Technical Specifications 9
●Transmitter Controls 10
●Transmitter's Antenna 12
●Transmitter Lipo Battery LT2F2000B 13
●How to turn transmitter power ON/OFF 15
●Touch Panel 16
●HOME/EXIT and U.MENU/MON 16
●Panel Lock 17
●RF off mode 17
●Digital Trims (T1-T4) 18
●Monitor LED display 19
●Stick Control 19
●Stick Mode 20
●micro SD card 21
●Connector/Plug 22
●Receiver Nomenclature 23
●Receiver's Antenna Installation 25
●Home Screen 26
●Link Procedure 27
●After Setting 28
●Model ID 29
●Servo Connection by Model Type 31
Airplane/Glider 31
Helicopter 35
Multicopter 35
●SYSTEM MENU 36
●LINKAGE MENU 36
●MODEL MENU(Airplane/Glider) 37
●MODEL MENU(Helicopter) 38
●MODEL MENU(Multicopter) 39

INTRODUCTION

Thank you for purchasing a Futaba® FASSTest-2.4 GHz* T16IZ series digital proportional R/C system. This system is extremely versatile and may be used by beginners and pros alike. In order for you to make the best use of your system and to fly safely, please read this manual carefully. If you have any difficulties while using your system, please consult the manual, our online Frequently Asked Questions (on the web pages referenced below), your hobby dealer, or the Futaba Service Center.

*FASSTest: Futaba Advanced Spread Spectrum Technology extend system telemetry

Due to unforeseen changes in production procedures, the information contained in this manual is subject to change without notice.

Support and Service: It is recommended to have your Futaba equipment serviced annually during your hobby's "off season" to ensure safe operation.

In North America

Please feel free to contact the Futaba Service Center for assistance in operation, use and programming. Please be sure to regularly visit the T16IZ Frequently Asked Questions web site at www.futabausa.com/. This page includes extensive programming, use, set up and safety information on the T16IZ radio system and is updated regularly. Any technical updates and US manual corrections will be available on this web page. If you do not find the answers to your questions there, please see the end of our F.A.Q. area for information on contacting us via email for the most rapid and convenient response.

Don't have Internet access? Internet access is available at no charge at most public libraries, schools, and other public resources. We find internet support to be a fabulous reference for many modelers as items can be printed and saved for future reference, and can be accessed at any hour of the day, night, weekend or holiday. If you do not wish to access the internet for information, however, don't worry. Our support teams are available Monday through Friday 8-5 Central time to assist you.

For Service :
FUTABA Corporation of America
2681 Wall Triana Hwy Huntsville, AL 35824, U.S.A.
Phone:1-256-461-9399 FAX:1-256-461-1059
https://www.futabausa.com/
E-mail: service@futabaUSA.com

Outside North America

Please contact your Futaba importer in your region of the world to assist you with any questions, problems or service needs. Please recognize that all information in this manual, and all support availability, is based upon the systems sold in North America only. Products purchased elsewhere may vary. Always contact your region's support center for assistance.

Application, Export, and Modification

1. This product may be used for unmanned aerial vehicle use. It is not intended for use in any application other than unmanned aerial vehicle control. The product is subject to regulations of the Ministry of Radio/Telecommunications and is restricted under Japanese law to such purposes.
2. Exportation precautions:
(a) When this product is exported from the country of manufacture, its use is to be approved by the laws governing the country of destination which govern devices that emit radio frequencies. If this product is then re-exported to other countries, it may be subject to restrictions on such export. Prior approval of the appropriate government authorities may be required. If you have purchased this product from an exporter outside your country, and not the authorized Futaba distributor in your country, please contact the seller immediately to determine if such export regulations have been met.
(b) Use of this product with anything other than models may be restricted by Export and Trade Control Regulations, and an application for export approval must be submitted. This equipment must not be utilized to operate equipment other than radio controlled models.
3. Modification, adjustment, and replacement of parts: Futaba is not responsible for unauthorized modification, adjustment, and replacement of parts on this product. Any such changes may void the warranty.

Compliance Information Statement (for U.S.A.)

This device complies with part 15 of the FCC Rules. Operation is subject to the following two conditions:
(1) This device may not cause harmful interference, and (2) This device must accept any interference received, including interference that may cause undesired operation.
(3)RF Radiation Exposure Statement (For T16IZ)
This equipment complies with FCC radiation exposure limits set forth for an uncontrolled environment.This transmitter must not be co-located or operating in conjunction with any other antenna or transmitter.
RF Radiation Exposure Statement (For R7108SB)
This equipment complies with FCC radiation exposure limits set forth for an uncontrolled environment. This equipment should be installed and operated with minimum distance 20cm between the radiator & your body.
The responsible party for the compliance of this device is:
FUTABA Corporation of America
2681 Wall Triana Hwy Huntsville, AL 35824, U.S.A.
Phone:1-256-461-9399 FAX:1-256-461-1059
https://www.futabausa.com/
E-mail: service@futabaUSA.com
CAUTION:
To assure continued FCC compliance:
Any changes or modifications not expressly approved by the grantee of this device could void the user's authority to operate the equipment.

IC

This device complies with Industry Canada license-exempt RSS standard(s). Operation is subject to the following two conditions: (1) this device may not cause interference, and (2) this device must accept any interference, including interference that may cause undesired operation of the device.
This equipment complies with IC radiation exposure limits set forth for an uncontrolled environment. This transmitter must not be co-located or operating in conjunction with any other antenna or transmitter.
French:
Cet appareil radio est conforme au CNR d'Industrie Canada. L'utilisation de ce dispositif est autorisée seulement aux deux conditions suivantes : (1) il ne doit pas produire de brouillage, et (2) l'utilisateur du dispositif doit être prêt à accepter tout brouillage radioélectrique reçu, même si ce brouillage est susceptible de compromettre le fonctionnement du dispositif.
Cet équipement est conforme aux limites d'exposition au rayonnement du CI établies pour un environnement non contrôlé. Cet émetteur ne doit pas être co-situé ou fonctionner conjointement avec une autre antenne ou émetteur.

Declaration of Conformity (for EU)

Hereby, Futaba Corporation declares that the radio equipment type is in compliance with Directive 2014/53/EU.
The full text of the EU declaration of conformity is available at the following internet address:

http://www.rc.futaba.co.jp/english/dl/declarations.html

Battery Recycling (for U.S.A.)

The RBRC™ SEAL on the (easily removable) nickel-cadmium battery and nickel-metalhydride battery contained in Futaba products indicates that Futaba Corporation is voluntarily participating in an industry program to collect and recycle these batteries at the end of their useful lives, when taken out of service within the United States. The RBRC™ program provides a convenient alternative to placing used nickel-cadmium batteries and nickel-metalhydride batteries into the trash or municipal waste system, which is illegal in some areas. You may contact your local recycling center for information on where to return the spent battery. Please call 1-800-8-BATTERY for information on NiCd/NiMH battery recycling in your area. Futaba Corporation's involvement in this program is part of its commitment to protecting our environment and conserving natural resources.
NOTE: Our instruction manuals encourage our customers to return spent batteries to a local recycling center in order to keep a healthy environment.
RBRC™ is a trademark of the Rechargeable Battery Recycling Corporation.

Flying Safety

Where to Fly

We recommend that you fly at a recognized model airplane flying field. You can find model clubs and fields by asking your nearest hobby dealer, or, in the US, by contacting the Academy of Model Aeronautics.

The national Academy of Model Aeronautics (AMA) has more than 2,500 chartered clubs across the country. Through any one of them, instructor training programs and insured newcomer training are available. Contact the AMA at the address or toll-free phone number below.

AMA
SINCE 1936

Academy of Model Aeronautics
5161 East Memorial Drive
Muncie, IN 47302
Tele. (800) 435-9262
Fax (765) 289-4248
or via the Internet at http:\\www.modelaircraft.org

Always pay particular attention to the flying field's rules, as well as the presence and location of spectators, the wind direction, and any obstacles on the field. Be very careful flying in areas near power lines, tall buildings, or communication facilities as there may be radio interference in their vicinity.

Precautions

Application, Export, and Modification Precautions.

1. This product is only designed for use with radio control models. Use of the product described in this instruction manual is limited to radio control models.
2. Export precautions:
   a) When this product is exported, it cannot be used where prohibited by the laws governing radio waves of the destination country.
   b) Use of this product with other than models may be restricted by Export and Trade Control Regulations.
3. Modification, adjustment, and parts replacement:
   Futaba is not responsible for unauthorized modification, adjustment, or replacement of parts on this product.

■ No part of this manual may be reproduced in any form without prior permission.
■ The contents of this manual are subject to change without prior notice.
■ The contents of this manual should be complete, but if there are any unclear or missing parts please contact a Futaba Service Center.
■ Futaba is not responsible for the use of this product by the customer.
■ Company and product names in this manual are trademarks or registered trademarks of the respective company.

For safe use

Please observe the following precautions to ensure safe use of this product at all times.

Meaning of Special Markings:

The parts of this manual indicated by the following marks require special attention from the standpoint of safety.

⚠ **DANGER - Procedures which may lead to dangerous conditions and cause death/serious injury if not carried out properly.**

⚠ **WARNING - Procedures which may lead to a dangerous condition or cause death or serious injury to the user if not carried out properly, or procedures where the probability of superficial injury or physical damage is high.**

⚠ **CAUTION - Procedures where the possibility of serious injury to the user is small, but there is a danger of injury, or physical damage, if not carried out properly.**

⃠ = Prohibited ❗ = Mandatory

WARNING: Always keep electrical components away from small children.

Flying Precautions

⚠ WARNING

⃠ Never grasp the transmitter antenna while flying.

■ The transmitter output may drop drastically.

❗ Always make sure that all transmitter stick movements operate all servos properly in the model prior to flight. Also, make sure that all switches, etc. function properly as well. If there are any difficulties, do not use the system until all inputs are functioning properly.

⃠ Never fly in range check mode.

■ In the dedicated range test range check mode, the transmitter output range is reduced and may cause a crash.

⃠ While operating, never touch the transmitter with, or bring the transmitter near, another transmitter, a cellphone, or other wireless devices.

■ Doing so may cause erroneous operation.

⃠ Do not point the antenna directly toward the aircraft during flight.

■ The antenna is directional and the transmitter output is weakest. (The strength of the radio waves is greatest from the sides of the antenna.)

⃠ Never fly on a rainy day, when the wind is strong, or at night.

■ Water could lead to failure or improper functionality and poor control of the aircraft which could lead to a crash.

⃠ Never turn the power switch off during flight or while the engine or motor is running.

■ Operation will become impossible and the aircraft will crash. Even if the power switch is turned on, operation will not begin until transmitter and receiver internal processing is complete.

⃠ Do not start the engine or motor while wearing the neck strap.

■ The neck strap may become entangled with the rotating propeller, rotor, etc. and cause a serious injury.

⃠ Do not fly when you are physically impaired as it could pose a safety hazard to yourself or others.

⃠ Do not fly at the following places:

■ Near another radio control flying field.

■ Near or above people.

■ Near homes, schools, hospitals or other places where people congregate.

■ Near high voltage lines, high structures, or communication facilities.

⃠ When setting the transmitter on the ground during flight preparations, do not stand it upright.

■ The transmitter may tip over, the sticks may move and the propeller or rotor may rotate unexpectedly and cause injury.

⃠ Do not touch the engine, motor, or ESC during and immediately after use.

■ These items may become hot during use.

❗ For safety, fly so that the aircraft is visible at all times.

■ Flying behind buildings or other large structures will not only cause you to lose sight of the aircraft, but also degrade the RF link performance and cause loss of control.

❗ From the standpoint of safety, always set the fail safe function.

■ In particular, normally set the throttle channel to idle. For a helicopter, set the throttle channel to maintain a hover.

❗ When flying, always return the transmitter setup screen to the Home screen.

■ Erroneous input during flight is extremely dangerous.

❗ Always check the remaining capacity of the transmitter and receiver batteries before each flying session prior to flight.

■ Low battery capacity will cause loss of control and a crash.

❗ Always check operation of each control surface and perform a range test before each flying session. Also, when using the trainer function, check the operation of both the teacher and student transmitter.

■ Even one incorrect transmitter setting or aircraft abnormality can cause a crash.

❗ Before turning on the transmitter:

1. Always move the transmitter throttle stick position to the minimum (idle) position.

2. Turn on the transmitter first and then the receiver.

❗ When turning off the transmitter' s power switch after the engine or motor has stopped (state in which it will not rotate again):

1. Turn off the receiver power switch.

2. Then turn off the transmitter power switch.

■ If the power switch is turned on/off in the opposite order, the propeller may rotate unexpectedly and cause a serious injury.

■ Also always observe the above order when setting the fail safe function.

❗ When adjusting the transmitter, stop the engine except when necessary. In the case of a motor, disconnect the wiring that allows it to continue operation. When doing so, please exercise extreme caution. Ensure that the aircraft is secured and that it will not come into contact with anything or anyone. Ensure that the motor will not rotate prior to making any adjustments.

■ Unexpected high speed rotation of the engine/motor may cause a serious injury.

Battery and Charger Handling Precautions

⚠ DANGER

⊘ Do not recharge a battery that is damaged, deteriorated, leaking electrolyte, or wet.

⊘ Do not allow the charger or battery to become wet.

■ Do not use the charger when it or your hands are wet. Do not use the charger in humid places.

⊘ Do not short circuit the battery.

⊘ Do not solder, repair, deform, modify, or disassemble the battery and/or battery charger.

⊘ Do not drop the battery into a fire or bring it near a fire.

⊘ Do not charge and store the battery in direct sunlight or other hot places.

⊘ Do not charge the battery if it is covered with any object as it may become very hot.

⊘ Do not use the battery in a combustible environment.

■ The combustibles may could ignite ignite and cause an explosion or fire.

❗ Always charge the battery before each flying session.

■ If the battery goes dead during flight, the aircraft will crash.

❗ Insert the power cord plug firmly into the receptacle up to its base.

❗ Always use the charger with the specified power supply voltage.

❗ If the battery liquid should get in your eyes, do not rub your eyes, but immediately wash them with tap water or other clean water and get treated by a doctor.

■ The liquid can cause blindness.

❗ Temperature protection for battery charge:

	Temperature
Low temp. protection	0 ± 5° C
High temp. protection	45 ± 5° C

1. Replacement of a battery with an incorrect type that can defeat a safeguard.
2. Disposal of a battery into fire or a hot oven, or mechanically crushing or cutting of a battery, that can result in an explosion.
3. Leaving a battery in an extremely high temperature surrounding environment that can result in an explosion or the leakage of flammable liquid or gas.
4. A battery subjected to extremely low air pressure that may result in an explosion or the leakage of flammable liquid or gas.

⚠ WARNING

⊘ Do not touch the charger and battery for any length of time during charging.

■ Doing so may result in burns.

⊘ Do not use a charger or battery that has been damaged.

⊘ If any abnormalities such as smoke or discoloration are noted with either the charger or the battery, remove the battery from the transmitter or charger and disconnect the power cord plug and do not use the charger.

■ Continued use may cause fire, combustion, generation of heat, or rupture.

⊘ Do not subject the batteries to impact.

■ Doing so may cause fire, combustion, generation of heat, rupture, or liquid leakage.

❗ Use and store the battery and battery charger in a secure location away from children.

■ Not doing so may cause electric shock or injury.

❗ If the battery leaks liquid or generates an abnormal odor, immediately move it to a safe place for disposal.

■ Not doing so may cause combustion.

❗ If the battery liquid gets on your skin or clothing, immediately flush the area with tap water or other clean water.

■ Consult a doctor. The liquid can cause skin damage.

❗ After charging, disconnect the charger from the receptacle.

❗ When recycling or disposing of the battery, isolate the terminals by covering them with tape.

■ Short circuit of the terminals may cause combustion, generation of heat or rupture.

⚠ CAUTION

⊘ Do not use the battery with devices other than the corresponding transmitter.

⊘ Do not place heavy objects on top of the battery or charger. Also, do not place the battery or charger in any location where it may fall.

■ Doing so may cause damage or injury.

⊘ Do not store or use the battery where it is dusty or humid.

■ Insert the power cord plug into the receptacle only after eliminating the dust.

⊘ After the transmitter has been used for a long time, the battery may become hot. Do not touch the battery immediately.

■ Not doing so may cause a burn.

⊘ Do not bend or pull the cord unreasonably and do not place heavy objects on the cord.

■ The power cord may be damaged and cause combustion, generation of heat, or electric shock.

micro SD Card (Commercial Product) Handling Precautions

*Read the instruction manual supplied with the SD card for details.

⚠ WARNING

⃠ Never disassemble or modify the SD card.

⃠ Do not bend, drop, scratch or place heavy objects on the SD card.

⃠ If smoke or an abnormal odor emanates from the card, immediately turn off the transmitter power.

⃠ Do not use the SD card where it may be exposed to water, chemicals, oil, or other fluids.

■ Doing so may cause a fire or electric shock by short circuiting.

⚠ CAUTION

❗ Since the SD card is an electronic device, be careful of static electricity.

■ Static electricity may cause erroneous operation or other trouble.

⃠ Do not use the SD card near radio and television sets, audio equipment, motors and other equipment that generates noise.

■ Doing so may cause erroneous operation.

⃠ Do not store the SD card in the following places:

- **Where the humidity is high**
- **Where the temperature difference is severe**
- **Where it is very dusty**
- **Where the card will be exposed to shock and vibration**
- **Near speakers and other magnetic devices**

⃠ Do not insert foreign matter into the transmitter card slot.

■ Doing so may cause erroneous operation.

⃠ Do not expose the card to shock and vibration and do not remove the card from the card slot while data is being written or read.

■ The data may be damaged or lost.

● Recorded data

The data recorded on the SD card cannot be compensated regardless of the contents or cause of the trouble or obstruction. Futaba does not perform data restoration or recovery work.

Storage and Disposal Precautions

⚠ WARNING

⃠ Keep wireless equipment, batteries, aircraft, etc. away from children.

⚠ CAUTION

⃠ Do not store wireless devices in the following places:

- **Where it is extremely hot (40℃ [104 ℉] or higher) or cold (-10℃ [14 ℉] or lower)**
- **Where the equipment will be exposed to direct sunlight**
- **Where the humidity is high**
- **Where vibration is prevalent**
- **Where it is very dusty**
- **Where the device may be exposed to steam and heat**

❗ When the device will not be used for a long time, remove the batteries from the transmitter and aircraft and store them in a dry place where the temperature is between 0℃ and 25℃ [32 ℉ and 77 ℉].

■ Leaving batteries inside your model and radio when they are not being used for long periods will result in battery deterioration, liquid leakage and other damage.

Other Precautions

⚠ CAUTION

⃠ Do not directly expose plastic parts to fuel, oil, exhaust gas, etc.

■ If left in such an environment, the plastic may be damaged.

■ Since the metal parts of the case may corrode, always keep them clean.

❗ Join the Academy of Model Aeronautics.

■ The Academy of Model Aeronautics (AMA) provides guidelines and liability protection should the need arise.

❗ Always use genuine Futaba products such as transmitter, receiver, servo, ESC, etc.

■ Futaba is not responsible for damage sustained by combination with parts other than Futaba Genuine Parts. Use the parts specified in the instruction manual and catalog.

Features

FASSTest system

The T16IZ transmitter has adopted the bidirectional communication system "FASSTest". Data from the receiver can be checked in your transmitter. FASSTest is a maximum 18 channels 2.4 GHz dedicated system.

Color touch screen LCD

T16IZ has an HVGA 4.3 inch, full-color, backlit LCD touch screen. The screen is transflective which enables both indoor and outdoor visibility.

S.BUS2 system

By using the S.BUS2 system multiple servos, gyros and telemetry sensors are easily installed with a minimum amount of cables.

Model types

Multicopter. 8 swash types are available for helicopters. 7 wing types and 3 tail types are available for airplanes and gliders. Functions and mixing functions necessary for each model type are set in advance at the factory.

Lithium-ion polymer battery

T16IZ is operated by a 7.4 V/2,000 mAh Lithium-ion polymer battery.

micro SD card (Secure Digital memory card) (Not included)

Model data can be saved to an micro SD card (SD:32MB-2GB SDHC:4GB-32GB). When T16IZ transmitter software files are released, the software can be updated by using an micro SD card update.

Edit button

Two edit buttons are provided, and the operating screen can be immediately “Returned” to the HOME screen during operation. Setting operation can be performed easily by combining this button with a touch sensor.

Vibration function

Selects a function that alerts the operator to various alarms by vibrating the transmitter in addition to sounding a buzzer.

Speech function

A function is equipped which allows the system to provide telemetry data audibly. This function can also be utilized with commercially available earphones.

Contents and Technical Specifications

- **T16IZ Transmitter**
- **R7108SB Receiver**
- **LT2F2000B LiPo Battery**
- **USB Cable**
- **Hex Key**
- **Tx Strap**
- **Short Manual**

(Specifications and ratings are subject to change without notice.)

*The contents may vary on the type of set.

Transmitter T16IZ

(2-stick, 18-channel, FASSTest-2.4 GHz system)

Transmitting frequency: 2.4 GHz band
System: FASSTest 18CH/FASSTest 12CH/S-FHSS/T-FHSS/
FASST MULT(Europe is not supported)/FASST 7CH(Europe is not supported) switchable
Power supply: 7.4 V LT2F2000B LiPo battery
Frequency band: 2.4 GHz
RF power output : 28 mW

Receiver R7108SB

(FASSTest-2.4 GHz system, Dual Antenna Diversity, S.BUS/S.BUS2 system)

Power requirement: 3.7 V-7.4 V battery or regulated output from ESC, etc. (*1)
Size: 0.98 x 1.86 x 0.56 in. (24.9 x 47.3 x 14.3 mm)
Weight: 0.42 oz. (12.0 g)
Frequency band: 2.4 GHz
RF power output: 25 mW EIRP

(*1) When using ESCs make sure that the regulated output capacity meets your usage application.

Note: This set does not include a charger. Use a commercially available USB charger AC adapter (USB-A type 5 V-2 A) or the Futaba optional USB AC adapter.

Note: The battery in the T16IZ transmitter does not arrive already attached to the battery connector. Please connect the battery connector before use.

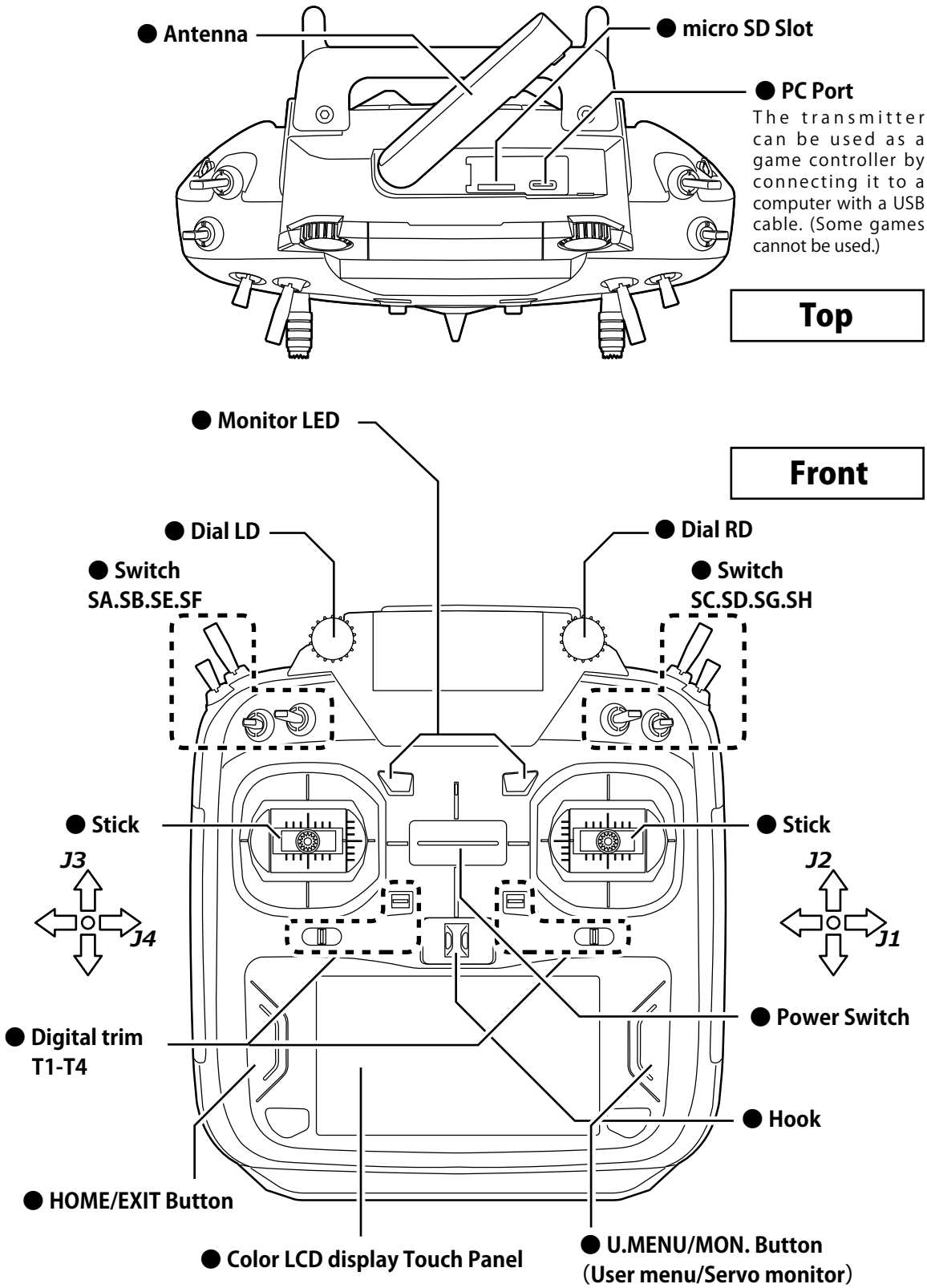
● Antenna
● micro SD Slot
● PC Port
The transmitter can be used as a game controller by connecting it to a computer with a USB cable. (Some games cannot be used.)
Top
● Monitor LED
Front
● Dial LD
● Dial RD
● Switch SA.SB.SE.SF
● Switch SC.SD.SG.SH
● Stick
J3
J4
● Stick
J2
J1
● Power Switch
● Digital trim T1-T4
● Hook
● HOME/EXIT Button
● Color LCD display Touch Panel
● U.MENU/MON. Button (User menu/Servo monitor)

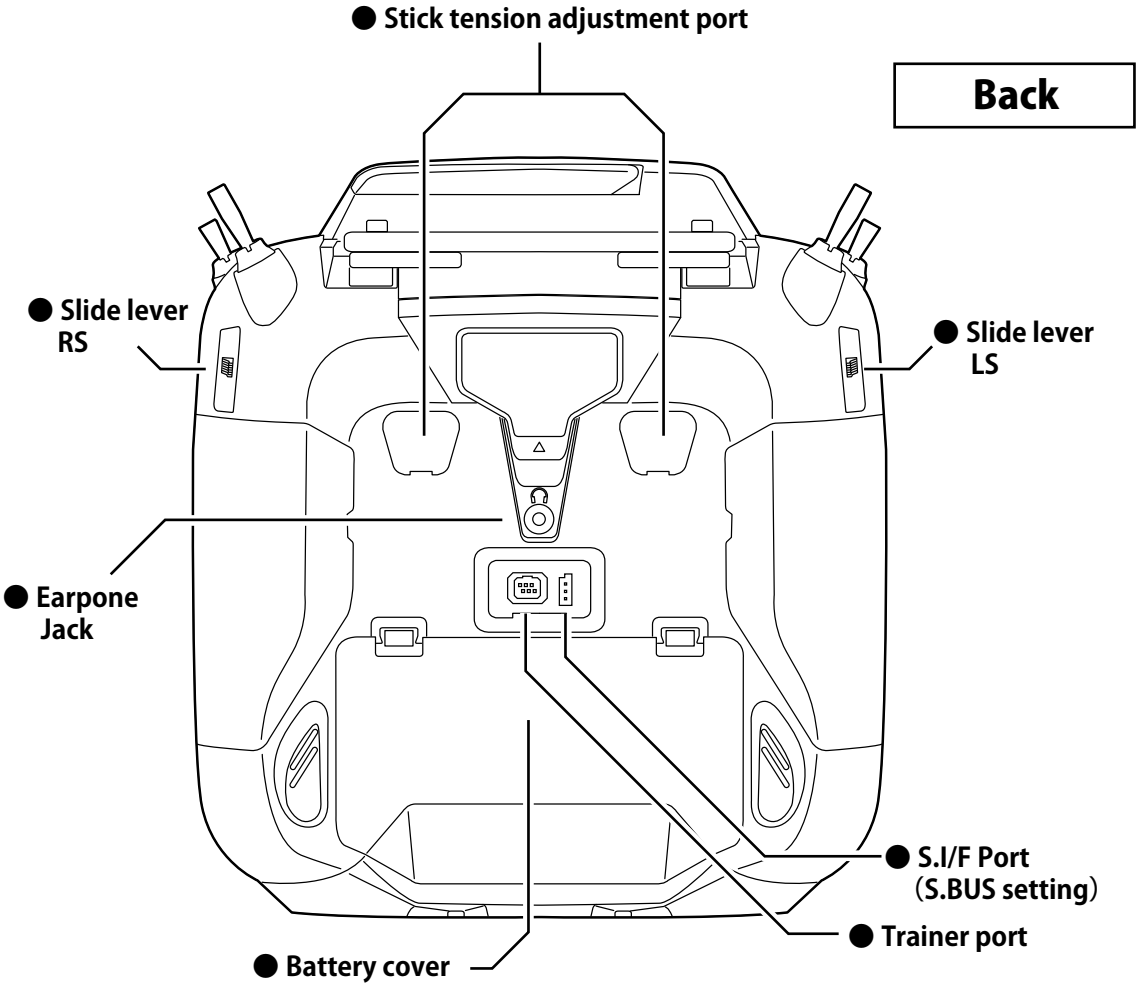

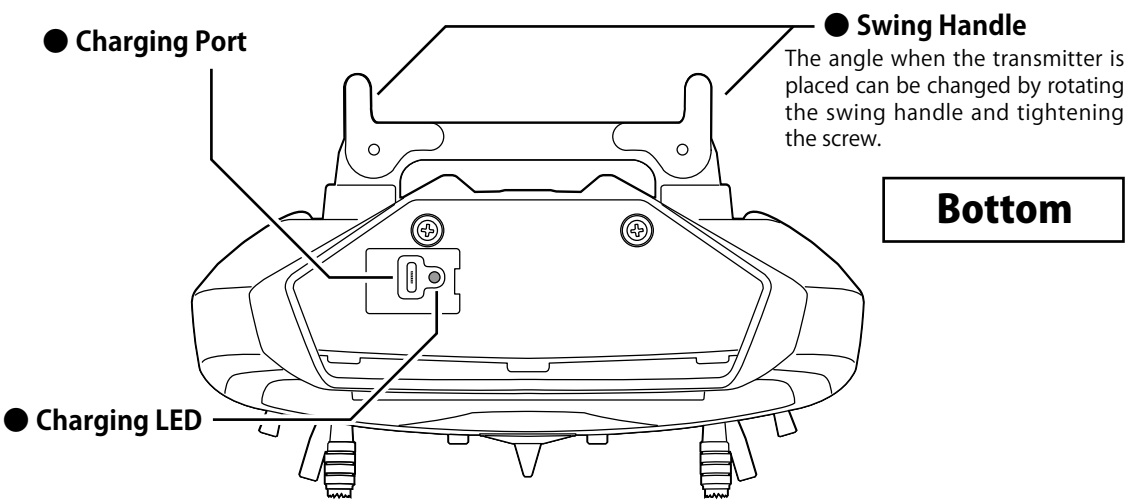

The LCD displays shown in this manual may vary from your own, depending upon your model type. LCD displays may also vary as a result of version upgrades or other changes.

Transmitter's Antenna

As with all radio frequency transmissions, the strongest area of signal transmission is from the sides of the transmitter's antenna. As such, the antenna should not be pointed directly at the model. If your flying style creates this situation, easily move the antenna to correct this situation.

Rotating antenna

The antenna can be rotated 90 degrees and angles 90 degrees. Forcing the antenna further than this can damage it. The antenna is not removable.

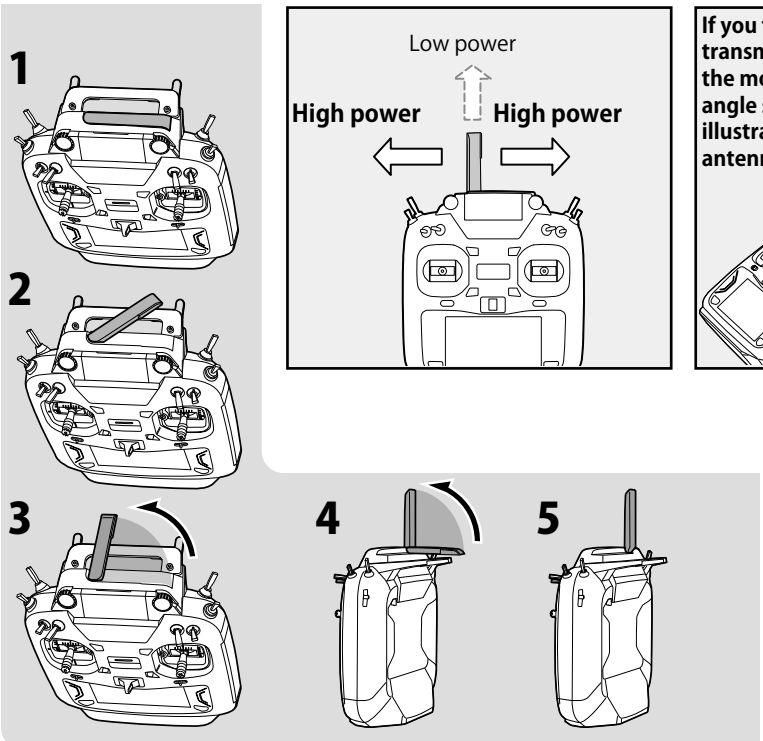

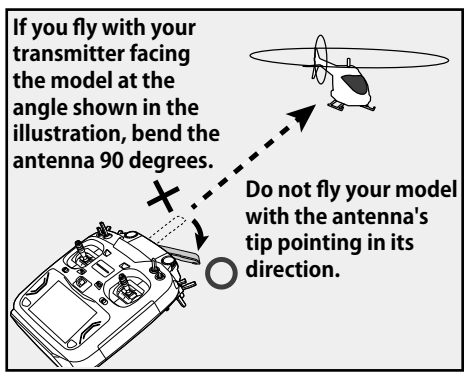

***Rotate first** ***Stand up next** **Stand up：1 ⇒ 5**
Storage： 5 ⇒ 1

⚠ CAUTION

❗ Please do not grasp the transmitter's antenna during flight.

■Doing so may degrade the quality of the RF transmission to the model.

⃠ Do not carry the transmitter by the antenna.

■The antenna wire may break, making operation impossible.

⃠ Do not pull the antenna forcefully.

■The antenna wire may break, making operation impossible.

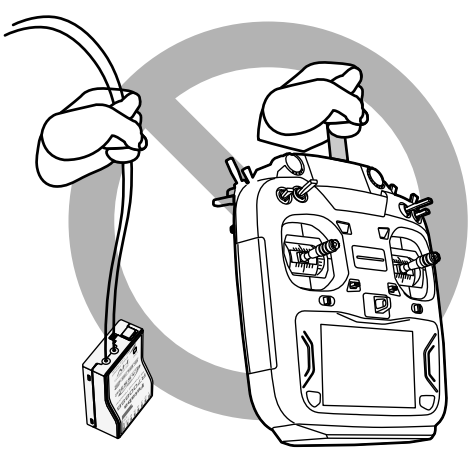

Transmitter LiPo Battery LT2F2000B

Installing/removing the LT2F2000B

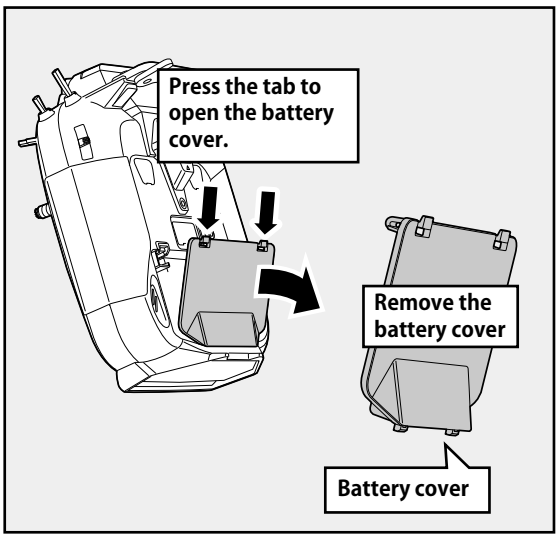

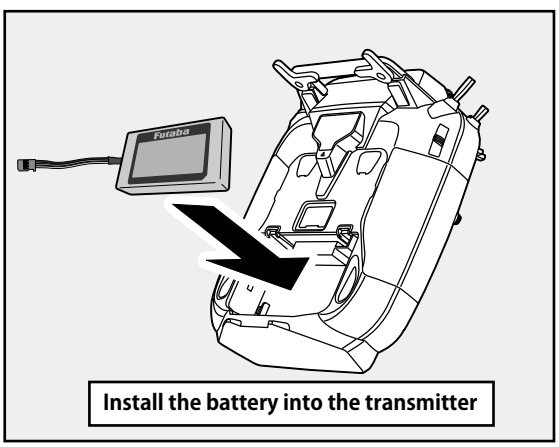

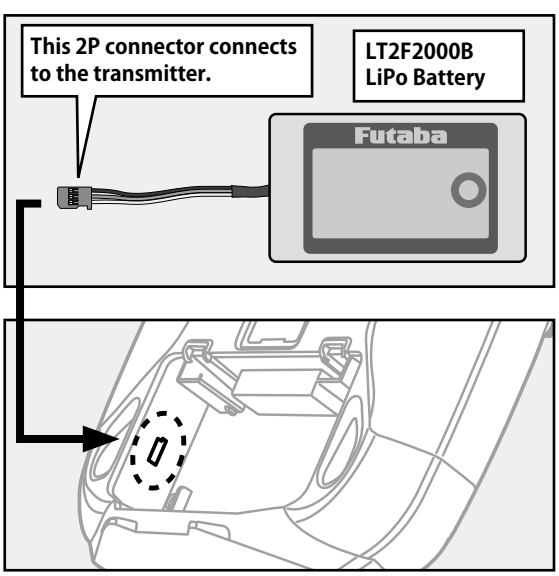

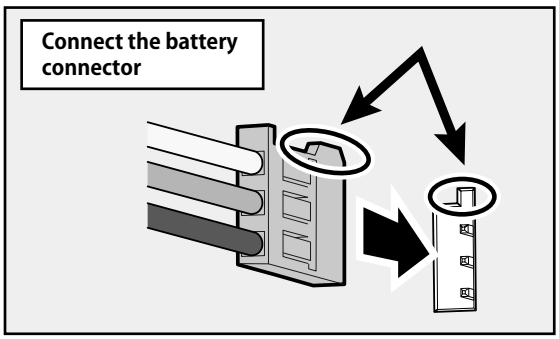

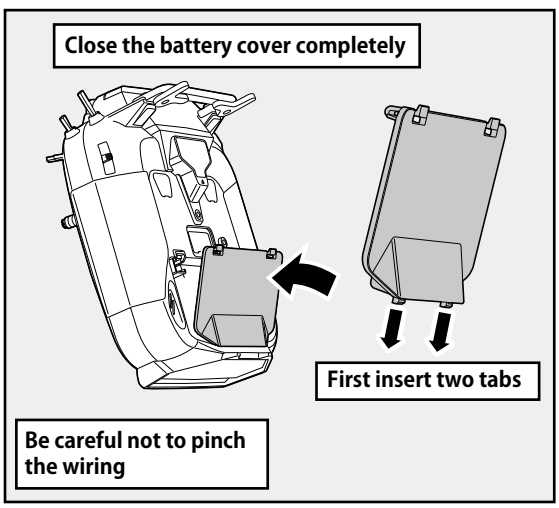

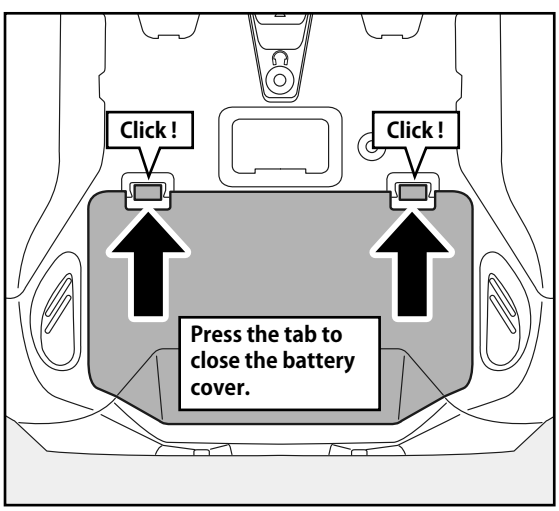

⚠ CAUTION

❗ **T16IZ only supports LiPo LT2F2000B. LiFe and NiMH batteries cannot be used.**

Charging a battery

This set is not equipped with an AC adapter for charging. Must be purchased separately.

- **AC adapter USB-A type 5 V - 2 A**

or

- **Futaba option AC adapter USB type**

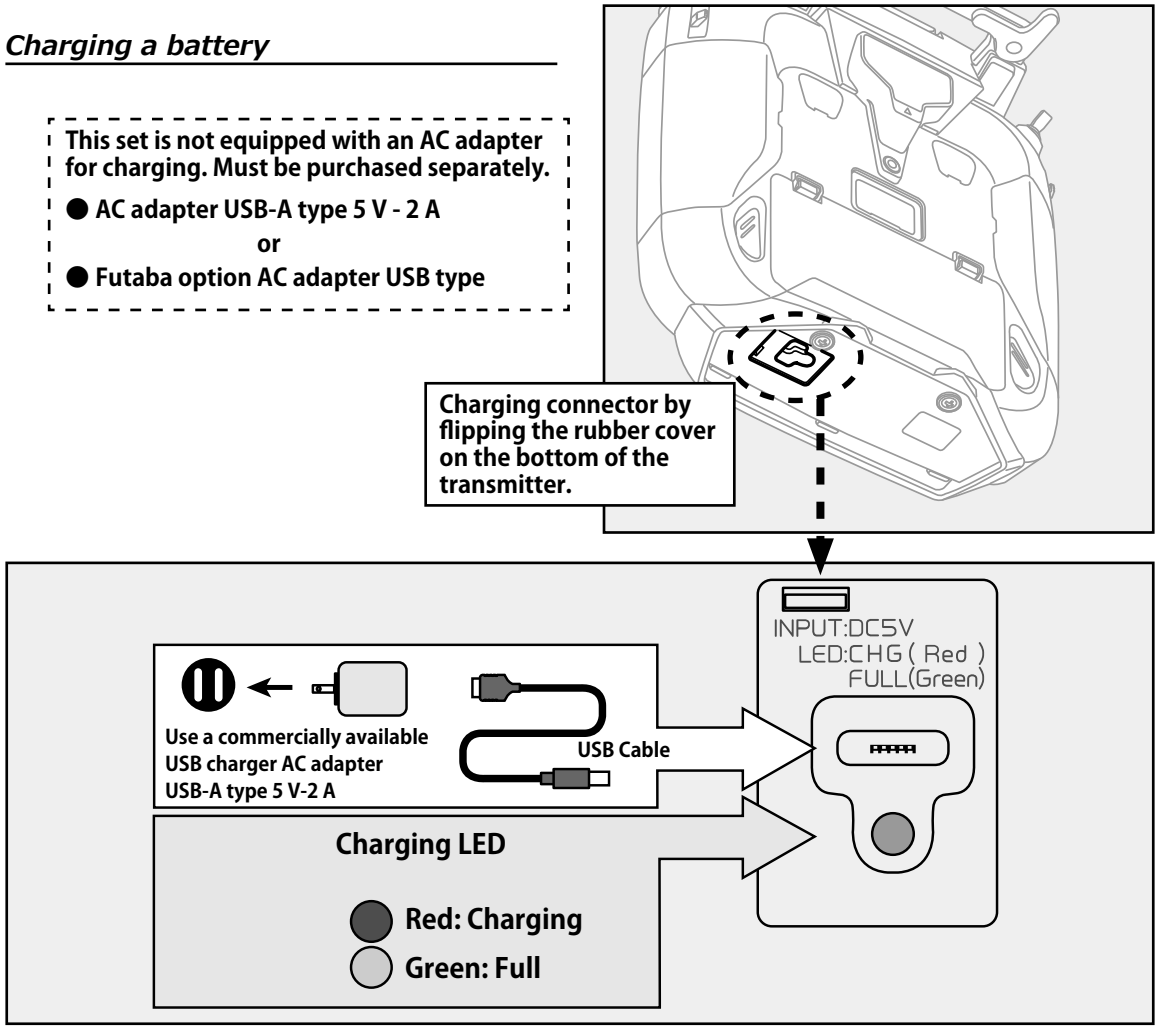

⚠ WARNING

Be careful not to drop the battery.

Never disconnect the battery connector from the T16IZ transmitter after turning off the power until the screen is completely blank and the transmitter has shut down completely.

* Internal devices such as memories may be damaged.

* If there is any problem, the message "Backup Error" will be shown the next time when you turn on the power of the transmitter. Do not use the transmitter as it is. Send it to the Futaba service center.

⚠ WARNING

Do not plug and unplug the charger when your hands are wet.

*It may cause an electric shock.

Do not overcharge/overdischarge the battery.

*Overcharging/Overdischarging a battery can result in burns, fire, injuries, or loss of sight due to overheating, breakage, or electrolyte leakage.

⚠ CAUTION

When the charger is not in use, disconnect it from the AC outlet.

* Do this to prevent accidents and to avoid overheating.

How to turn transmitter power ON/OFF

When turning on the power, the T16IZ transmitter will begin emitting RF automatically after it confirms the surrounding RF conditions. The status of the transmitter is displayed by LED at the upper part of the front of a T16IZ.

*If THR stick is high, a WARNING screen will appear. Another warning will appear if a power supply is attached. (In Multicopter mode, the THR position alarm will not appear.)

Power ON

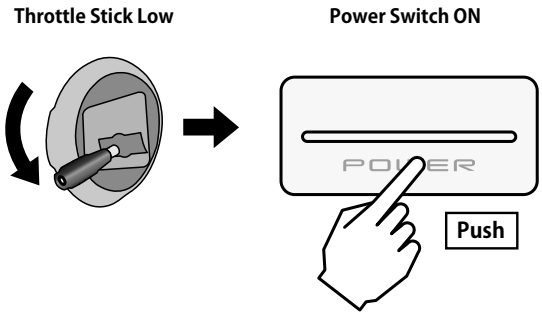

Power OFF

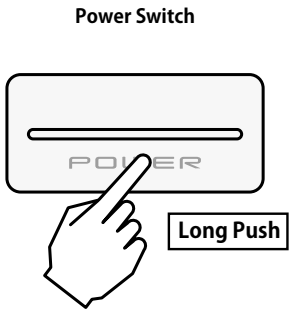

If the "Thr position" alarm displays

*If the throttle stick is in the high position when the power is turned ON

When the alarm activates, lower the throttle stick before turning the receiver power ON.

*If the power is turned ON when the idle-up, air brake, etc., switches are ON, the above warning will display. Ensure the relevant switches are turned OFF.

If the power switches are turned off in the opposite order the model may unexpectedly run out of control and cause a very dangerous situation.

Turning on the power switches

1. Turn on the transmitter power switch.
2. Turn on the receiver or speed control power switch.

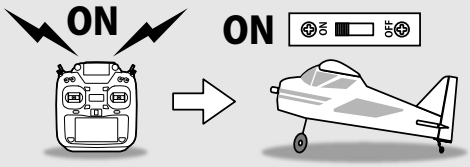

Turning off the power switches

Always be sure the motor/engine is stopped.

1. Turn off the receiver or speed control power switch.
2. Then turn off the transmitter power switch.

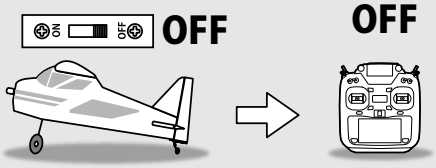

Touch Panel

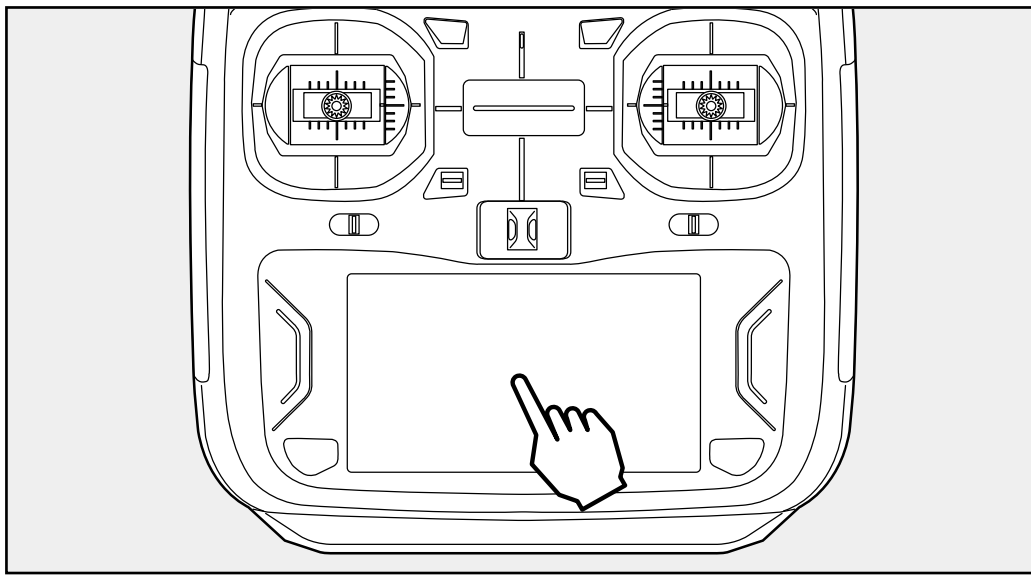

Tap the panel with your finger to enter data.

*Plastic film is attached to the Touch Panel. Please be careful so that you don't scratch the Touch Panel with anything hard such as a metal object. Don't push the Touch Panel with excessive force or drop anything on the panel.

*Although you may find some air bubbles under the plastic panel due to environmental changes such as temperature, it is not a defect and will cause no problems.

*Color LED is made from many pixels. Some pixels hold lighting. Moreover, some pixels go out. And a screen may flicker. Such condition is the characteristics of color LED. It is not failure.

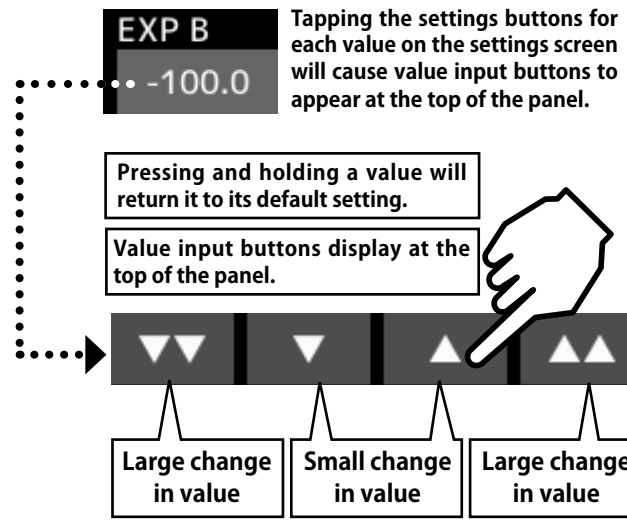

HOME/EXIT and U.MENU/MON.

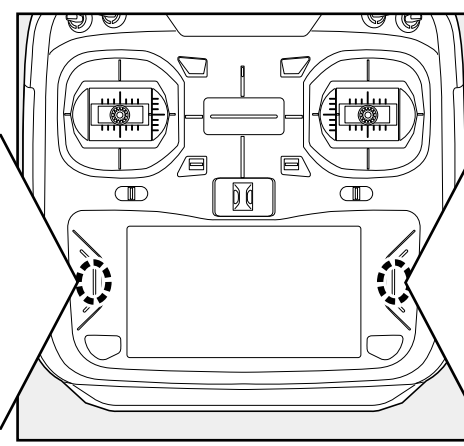

HOME/EXIT

Press	Return to the previous screen
Press and hold	Return to the home screen
Press from HOME screen.	To Telemetry display
Press and hold from HOME screen.	Panel lock / Lock release

U.MENU/MON.

Press	To user menu display
Press and hold	To servo monitor display

Panel Lock

Temporarily activating this function makes it impossible to change data by mistakenly touching keys during flight.

How to lock

1. The home screen is displayed.
2. Press the HOME/EXIT button for about 1 second. "Key mark" is displayed and the keys disabled.

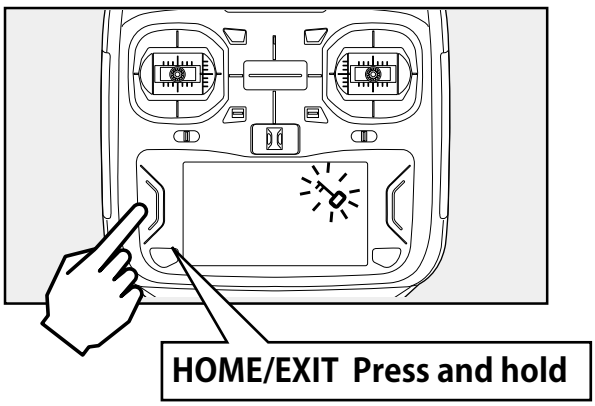

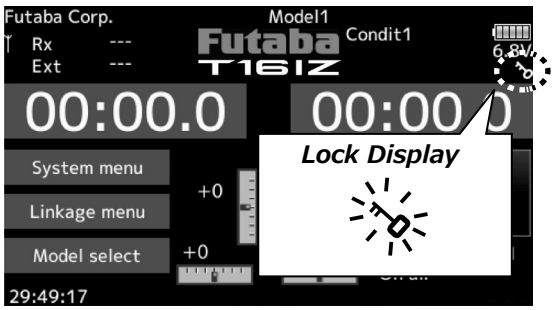

How to unlock

1. Press the Home/Exit button for about 1 second, and the panel will then become unlocked.

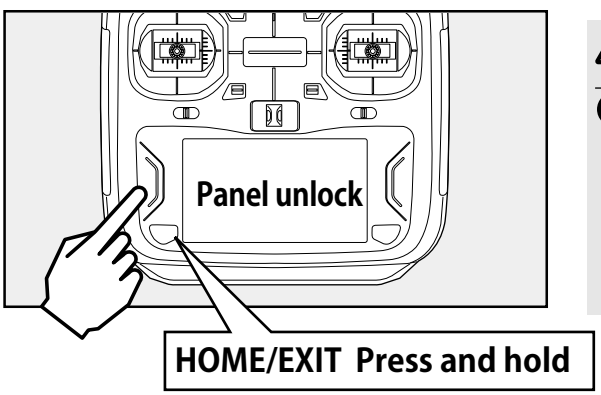

⚠ CAUTION

The T16IZ's touch screen is very sensitive. To avoid accidentally activating it during a flight, it is suggested that it be locked. Due to the touch screen's sensitivity, allowing it to be touched during flight by a neck strap hook, servo extension, or even your hand could be dangerous. Please use the Touch Panel lock for added safety during flight.

RF off mode

Model operation is not possible, but panel operation without RF signal transmission is allowed. (Reduces battery power consumption during set-up.)

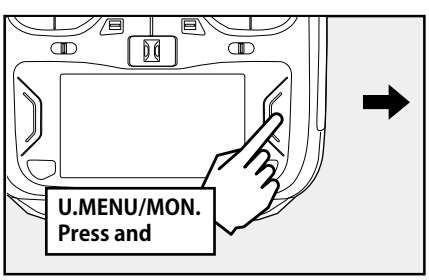

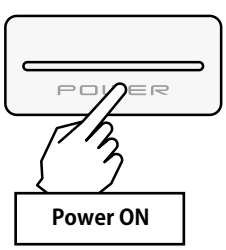

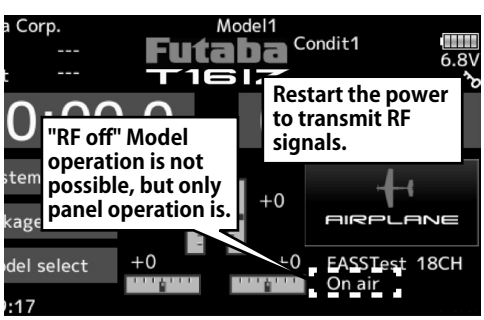

Digital Trims T1-T4

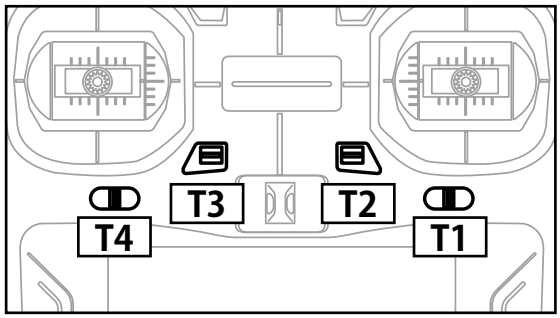

This transmitter is equipped with 4 digital trims. Each time you press a trim button, the trim position moves one step. If you continue pressing it, the trim position starts to move faster. In addition, when the trim position returns to the center, the tone will change. You can always monitor trim positions by referencing the LCD screen.

*You can select the trim step amount and the display unit on the home screen on the T1-T4 setting screen within the linkage menu.

Note: The trim positions you have set will be stored in the non-volatile memory and will remain there.

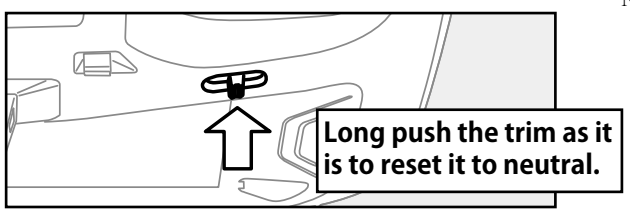

Digital trim operational example

***Example Stick Mode2**

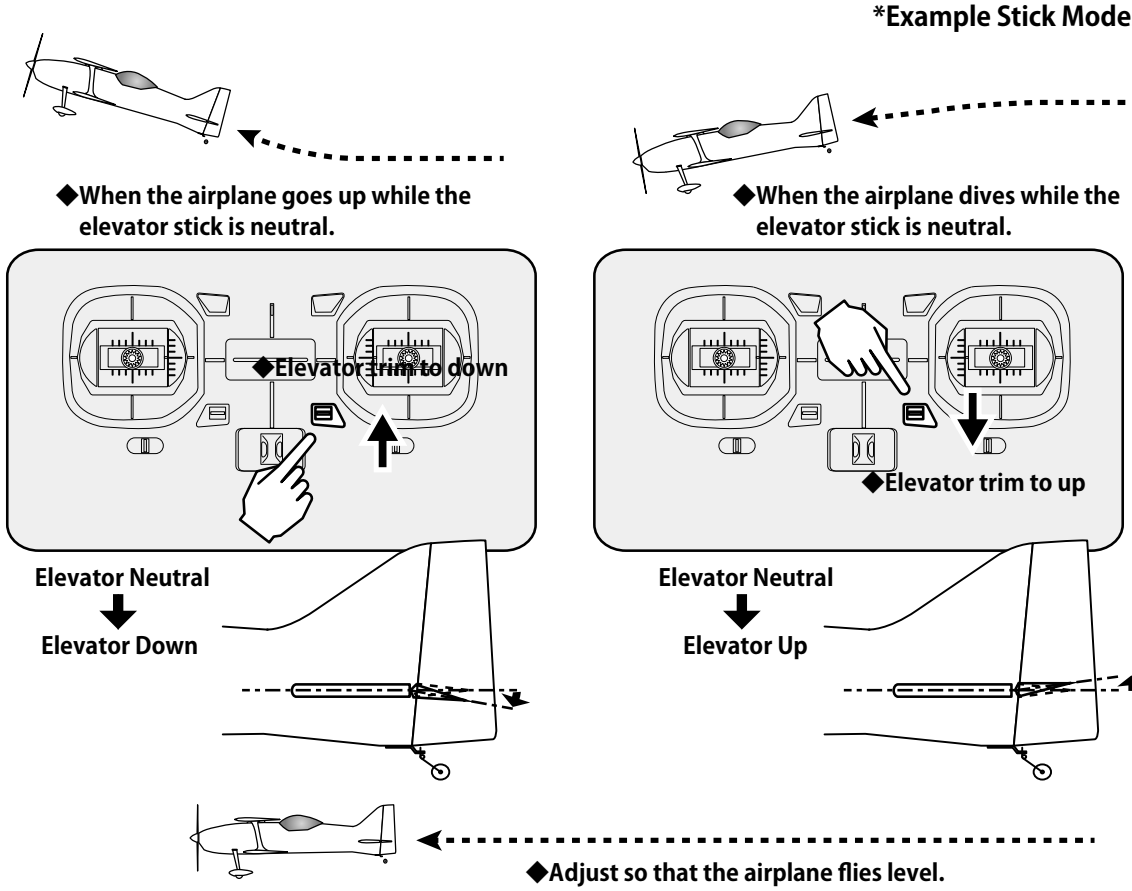

Monitor LED Display

The status of the transmitter is displayed by LED at the upper part of the front of a T16IZ.

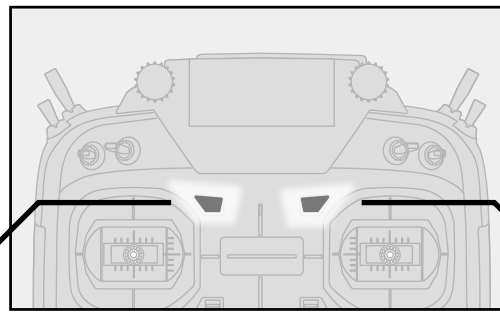

Red LED

- ◆ **ON** At startup
- ◆ **Blinking** Power switch is turned on with the throttle stick on the high side.

  Power switch is turned on when any condition switch is activated (in the ON state).

Blue LED

- ◆ **ON** Radio waves are being transmitted.
- ◆ **OFF** Radio waves are in the OFF state.
- ◆ **Blinking (0.5 s)** Link mode
- ◆ **Blinking (1 s)** Range check mode

Stick Control

***Example Stick Mode2**

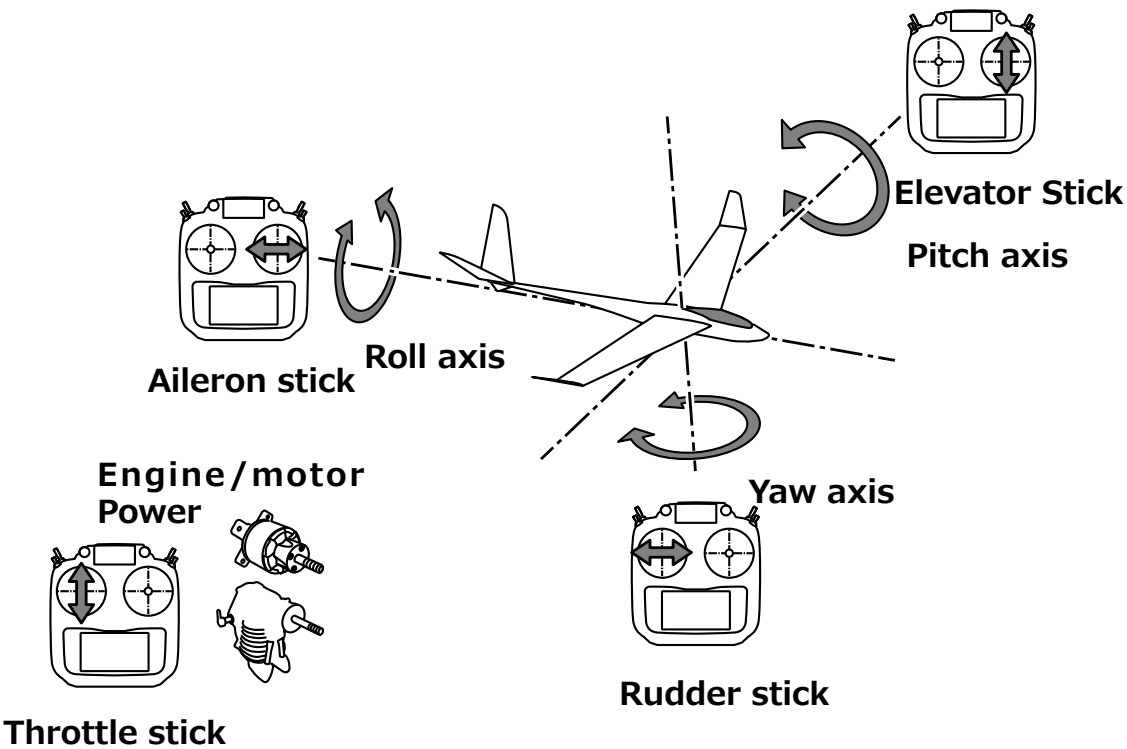

Stick Mode

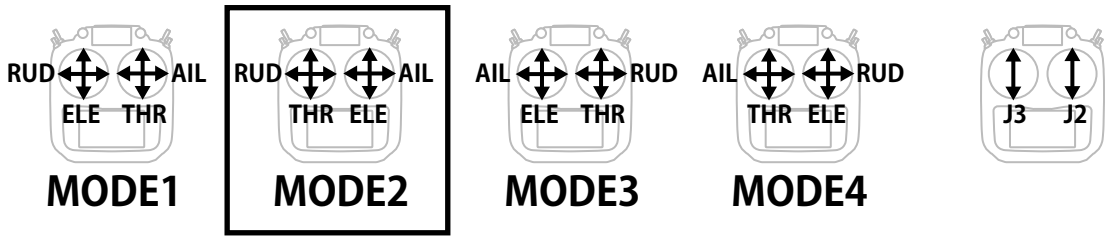

Default

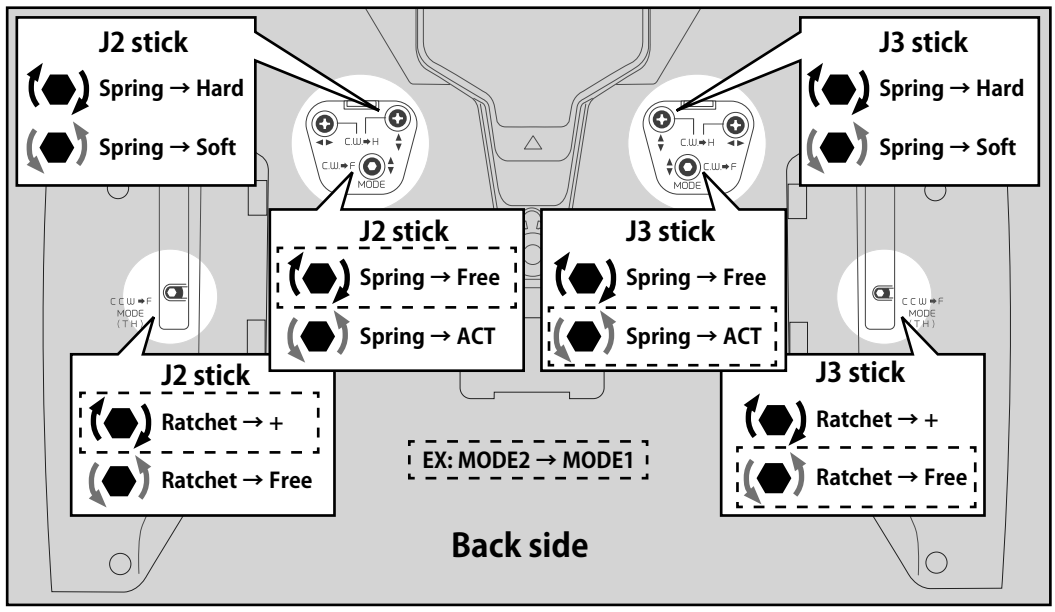

● System menu ⇒ H/W setting

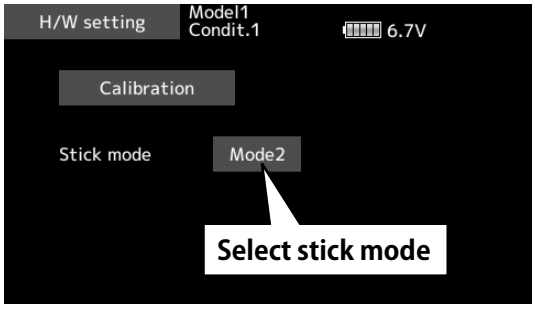

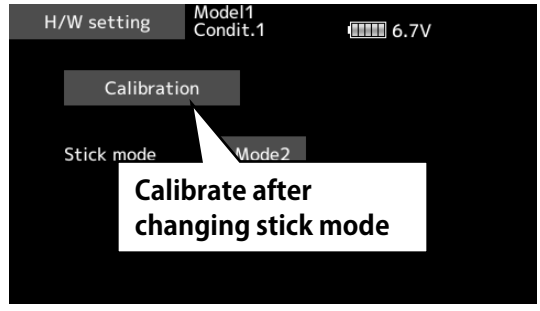

⚠ WARNING

- When this stick mode is changed, the model data is reset.
- Change stick mode before entering model data.
- Before the flight, make sure that the operation of the stick matches the model operation.

micro SD card (secure digital memory card) (not included)

The T16IZ transmitter model data can be stored by using any commonly found micro SD card. When T16IZ transmitter update software is released, the software is updated using an micro SD card. The T16IZ is capable of using SD and SDHC cards (SD:32MB-2GB SDHC:4GB-32GB).

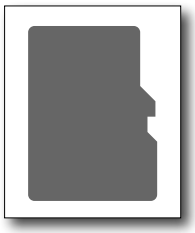

micro SD card reader/writer

Saving model data and update files (released from Futaba) into the micro SD card, you can use those files on your T16IZ transmitter. Equipment for reading and writing SD cards is available at most electronics stores.

Stored data

When you have a problem of saving or reading data after a long period of use, please get a new micro SD card.

*We are not responsible for, and offer no compensation for, memory card data that fails or is damaged for any reason. Be sure to keep a backup of all important data stored in your micro SD card.

Inserting/removing the micro SD card

1) Rotate the antenna.

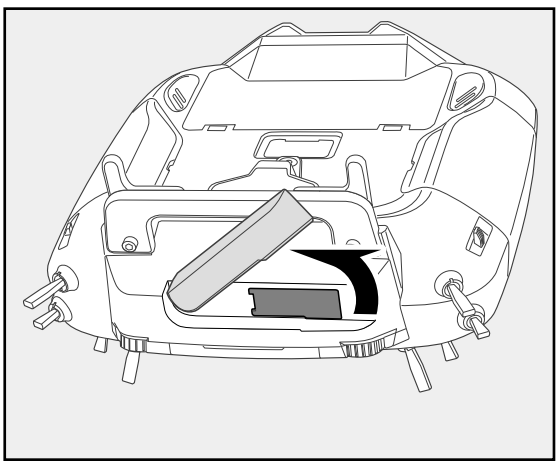

2) Open the rubber cover and insert the micro SD card into the micro SD card slot.

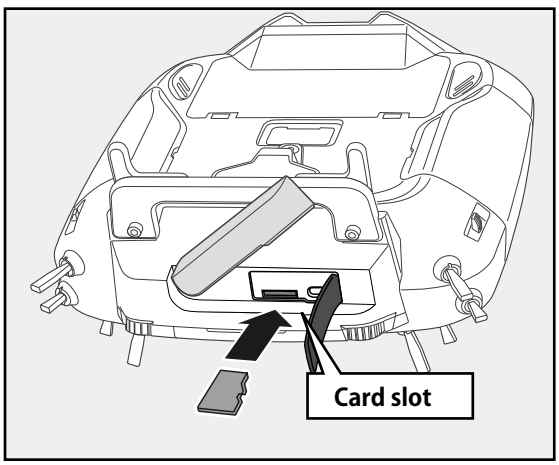

3) When the micro SD card is pressed in once again, the card will be released from the card slot and can be removed.

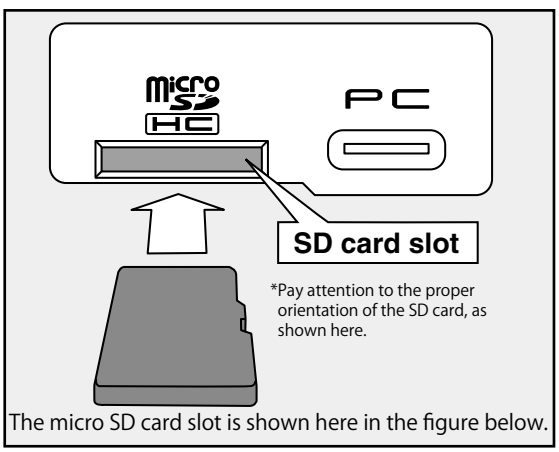

The micro SD card slot is shown here in the figure below.

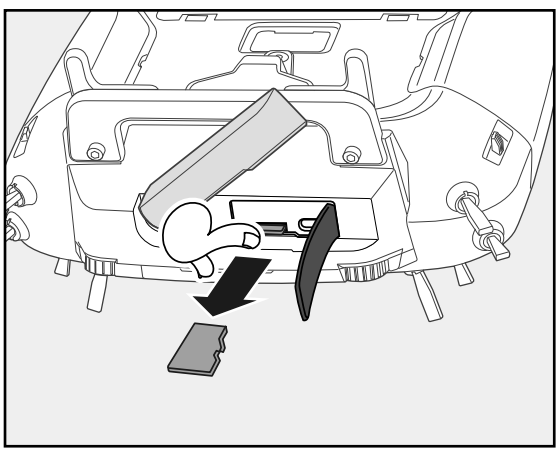

-When an micro SD card is installed in the T16IZ transmitter, a folder called "Futaba" is created. Folders called "LOG" and "MODEL" are created in this folder. The "MODEL" folder stores the model data and the "LOG" folder stores the telemetry log data.

-The telemetry log data recorded on the micro SD card can be converted to CSV format by the telemeter log converter released on our home page. When copying or moving a log file, always select both .FLI and .FLD file.

⚠ CAUTION

Be sure to turn off the power to the transmitter before inserting or removing the micro SD card.

As the micro SD card is a precision device, do not use excessive force when inserting.

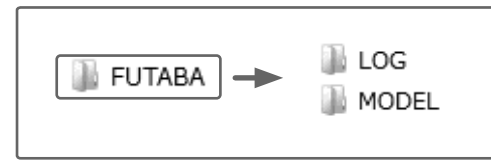

Connector/Plug

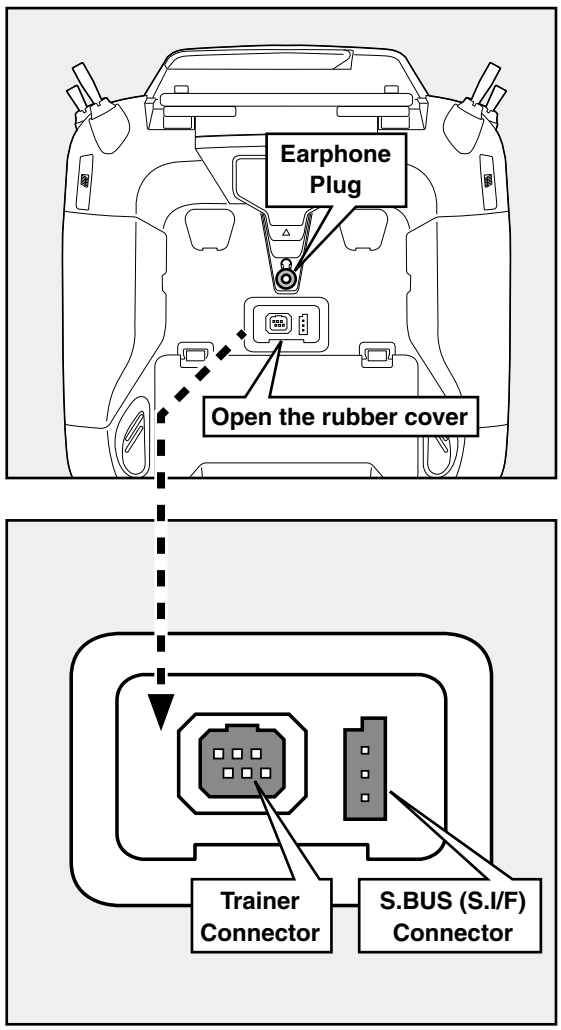

Earphone plug

Connecting a stereo headphone to this plug, the speech information of telemetry can be heard.

S.BUS connector (S.I/F)

When using an S.BUS servo and telemetry sensor, connect them both here.

Connector for trainer function

When you use the trainer function, connect the optional trainer cable between the transmitters for teacher and student.

*You can set the trainer function on the Trainer Function screen in the System menu.

Receiver Nomenclature

Before using the receiver, be sure to read the precautions listed in the following pages.

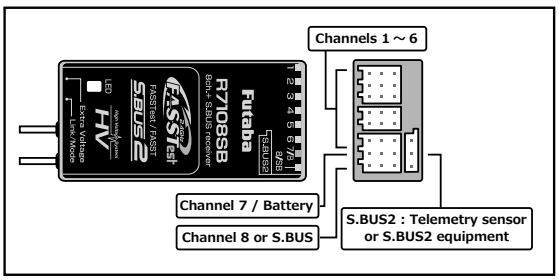

Connector

"1 through 6":outputs for the channels 1 through 6

"7/B": outputs of 7 channels and power.

"8/SB": outputs of 8 channels or S.BUS port.

[S.BUS Sevo S.BUS Gyro]

"S.BUS2": outputs of S.BUS2 port.

[Telemetry Sensor]

*When using nine or more channels, use an S.BUS function or use a second R7108SB and link both to your transmitter.

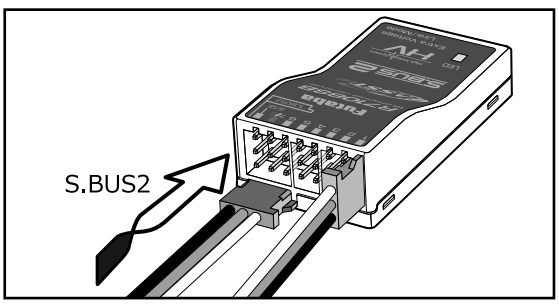

Connector insertion

Firmly insert the connector in the direction shown in the figure. Insert the S.BUS2 by turning it 90 degrees.

⚠ WARNING

S.BUS2 connectors

❗ Don't connect an S.BUS servo/gyro to BUS2 connector.

LED Monitor

This monitor is used to check the CH mode of the receiver.

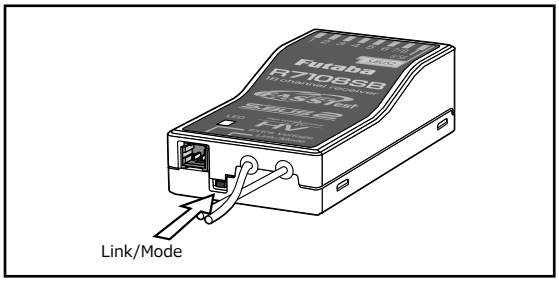

Link/Mode Switch

Use the small plastic screw driver that was included with your receiver.

The Link/Mode Switch is also used for the CH mode selection.

(The button is not used to link the transmitter and receiver together.)

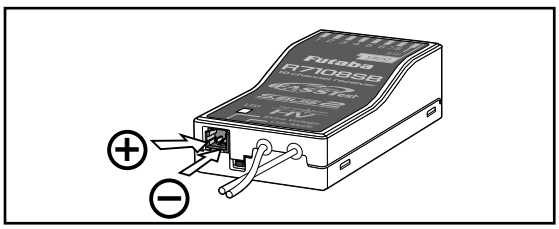

Extra Voltage Connector

Use this connector when using a voltage telemetry device to send the battery voltage (DC 0 ~ 70 V) from the receiver to the transmitter.

Please use an option is External voltage input cable. Wire in an extra connector to you drive batteries that mates with the extra voltage connector.

⚠ DANGER

⊘ Don't touch wiring.

* There is a danger of receiving an electric shock.

⊘ Do not short-circuit the battery terminals.

* A short circuit across the battery terminals may cause abnormal heating, fire and burns.

⊘ Please double check your polarity (+ and -) when hooking up your connectors.

* If + and - of wiring are mistaken, it will damage, ignite and explode.

⊘ Don' t connection to Extra Voltage before turning on a receiver power supply.

Connection of a receiver battery

⚠ WARNING

⊘ **Please make sure that you use a battery that can deliver enough capacity for the number and kind of servos used. Dry batteries cannot be used.**

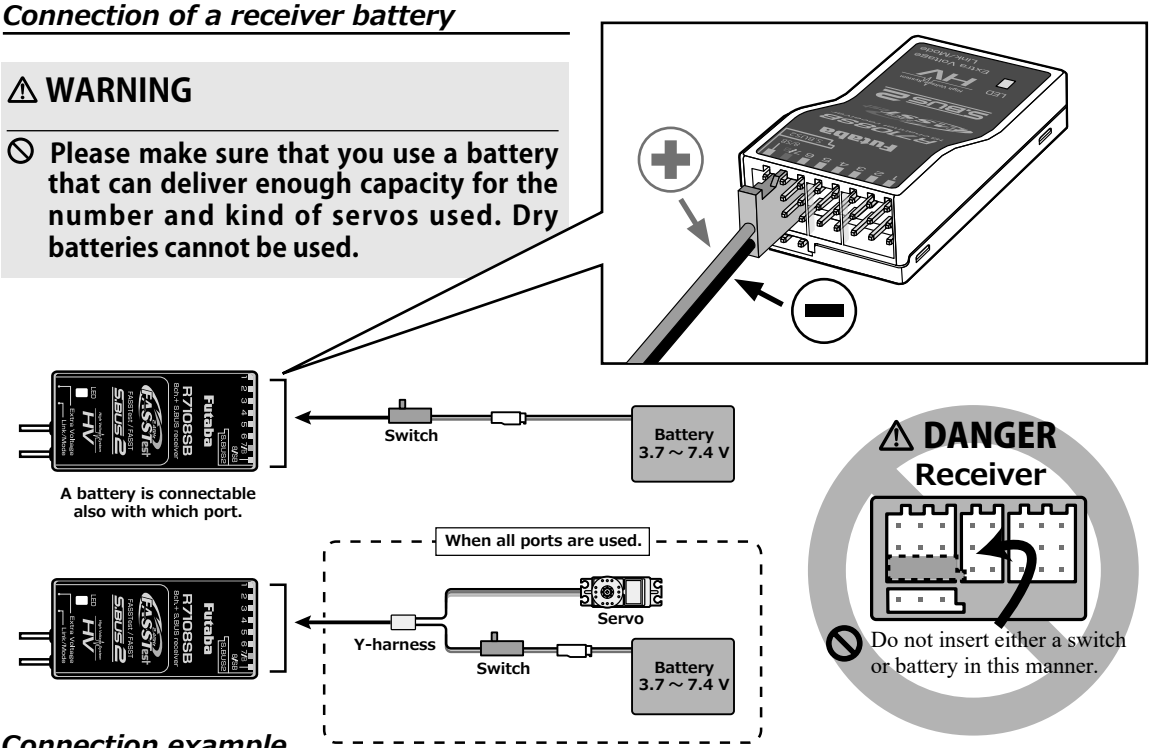

Connection example

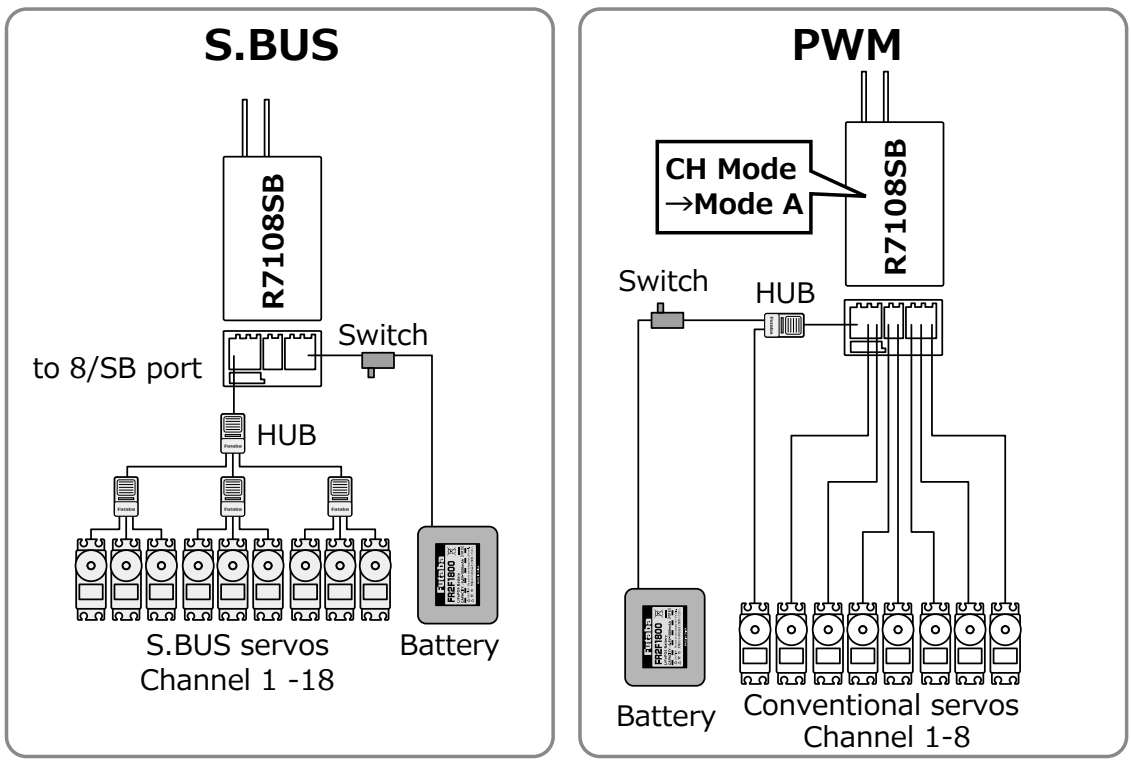

⚠ WARNING Power supply

❗ **Please make sure that you use a battery that can deliver enough capacity for the number and kind of servos used. Alkaline batteries cannot be used.**

Channel Modes

The R7108SB is capable of changing its channel allocations as described in the table below. This is especially important when using the receiver in a dual receiver mode.

1 Turn on the receiver. [Transmitter is always OFF]

2 Press and hold the Link/Mode button for 5 seconds to 10 seconds.

3 When the LED of the receiver changes from blinking red to blinking red with green, Link/Mode button is released.

4 The LED should now blink red two times in the patterns described in the chart below.

5 Each press of the Link/Mode button advances the receiver to the next mode.

6 When you reach the mode that you wish to operate in, press and hold the Link/Mode button for more than 2 seconds. When LED blinks in green with red, it is the completion of a mode change, Link/Mode button is released.

7 Please cycle the receiver power off and back on again after changing the Channel mode.

R7108SB CH Mode table

Output connector	Channel			
	Mode A 1 ～ 8CH	*Mode B* 1 ～ 7CH	*Mode C* 9 ～ 16CH	*Mode D* 9 ～ 15CH
1	1	1	9	9
2	2	2	10	10
3	3	3	11	11
4	4	4	12	12
5	5	5	13	13
6	6	6	14	14
7/B	7	7	15	15
8/SB	8	S.BUS	16	S.BUS
Red LED blink	1 time	2 times	3 times	4 times

Default

LED Indication

System	Status	LED
FASSTest	No signal reception	Red Solid
	Receiving signals	Green Solid
	Waiting for link	Start → 2second later → Red Blink（1second）
FASST	No signal reception	Red Solid
	Receiving signals	Green Solid
	Receiving signals but ID is unmatched	Green Blink
	Waiting for link	Red Blink
FASSTest FASST	Unrecoverable error (EEPROM, etc.)	Alternate blink

Receiver's Antenna Installation

The R7108SB has two antennas. In order to maximize signal reception and promote safe modeling Futaba has adopted a diversity antenna system. This allows the receiver to obtain RF signals on both antennas and fly problem-free.

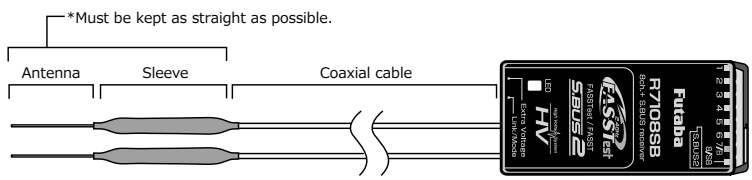

R7108SB Receiver

To obtain the best results of the diversity function, please refer to the following instructions:

1. The two antennas must be kept as straight as possible. Otherwise it will reduce the effective range.

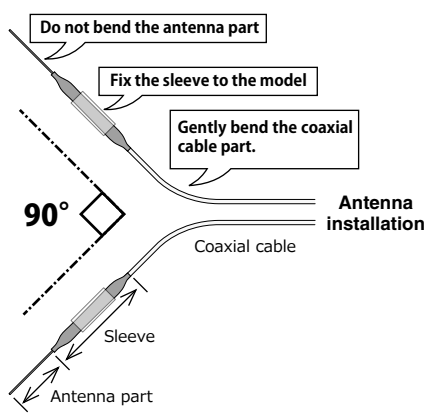

2. The two antennas should be placed at 90 degrees to each other.

   This is not a critical figure, but the most important thing is to keep the antennas away from each other as much as possible.

   Larger models can have large metal objects that can attenuate the RF signal. In this case the antennas should be placed at both sides of the model. Then the best RF signal condition is obtained at any flying attitude.

3. The antennas must be kept away from conductive materials, such as metal, carbon and fuel tank by at least a half inch. The coaxial part of the antennas does not need to follow these guidelines, but do not bend it in a tight radius.

4. Keep the antennas away from the motor, ESC, and other noise sources as much as possible.

Home Screen

This is the Home screen and descriptions of its menus. Use your finger to operate the touch screen.

Battery voltage for receivers

- In FASSTest/T-FHSS mode, it is displayed. Receiver voltage and Ext voltage display

Condition name

- The condition name that is currently used is displayed here.

Battery Indicator

- When the low battery, the alarm will beep. Land your aircraft immediately.

→ (Menu)

- Model

Tap the button to call Model Menu screen.

System mode

- System(FASSTest18CH etc.) mode is displayed here.

RF Indicator

The reception of the signal from the receiver to the transmitter is shown.

- This does not affect flight.

Model Name

- The model name that is currently used is displayed here.

User's name

Timer1, Timer2

- Timer is displayed here.

Tap the time button to start/stop the timer. (When the screen is tapped for 1 second, timer is reset to the initial value.)

→ (Menu)

- System
- Linkage
- Model select

Tap the button to call each Menu screen.

System timer

- This shows the accumulated time since the latest reset. (Each model / Total)

(Hour):(Minute):(Second)

Digital trim (T1 to T4)

- Trim position is displayed here.

⚠ WARNING

Be sure to confirm the model name before flying your aircraft.

Check the battery voltage as often as possible and try to charge the battery earlier. If the battery alarm makes a sound, land your aircraft immediately.

*You can adjust the LCD contrast by the display setting in the system menu.

Link Procedure (T16IZ/R7108SB)

Each transmitter has an individually assigned, unique ID code. In order to start operation, the receiver must be linked with the ID code of the transmitter to which it is being paired. Once the link is made, the ID code is stored in the receiver and no further linking is necessary unless the receiver is to be used with another transmitter. When you purchase additional R7108SB receivers, this procedure is necessary; otherwise the receiver will not work.

Link procedure

1. Place the transmitter and the receiver close to each other within half (0.5m) meter.

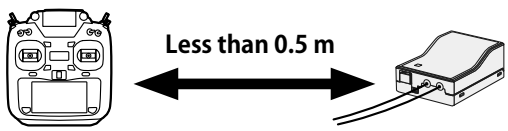

2. Turn on the transmitter.
3. Select [System type] at the Linkage menu and access the setup screen shown below by tapping the screen.

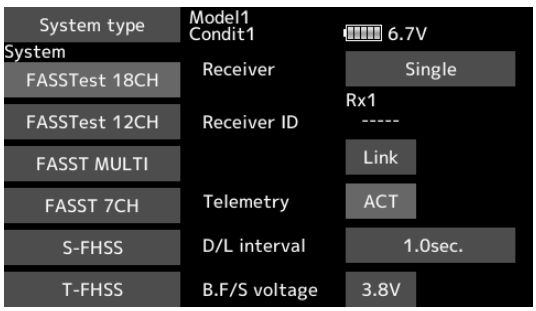

4. When you use two receivers on one model, you must change from [Single] to [Dual].

   *Only two receivers can be used. In "Dual", two setting items come out. Input, respectively.

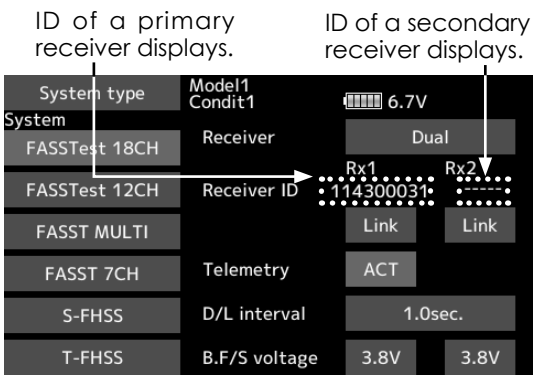

In Dual, a primary receiver (Rx1) is linked first. Next, a secondary (Rx2) receiver is linked.

5. Battery fail-safe voltage can be changed from the initial value of 3.8V here.

   * Only in FASSTest/T-FHSS Mode.

6. [Link] is tapped. The transmitter will emit a chime as it starts the linking process.

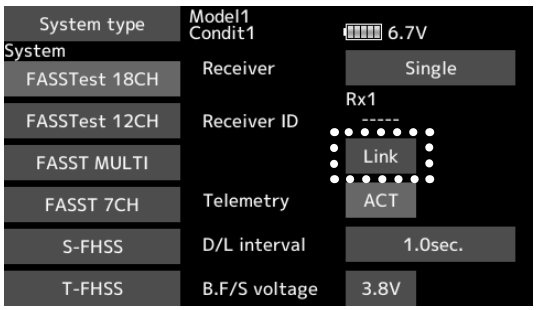

7. When the transmitter starts to chime, power on the receiver. The receiver should link to the transmitter within about 1 second.

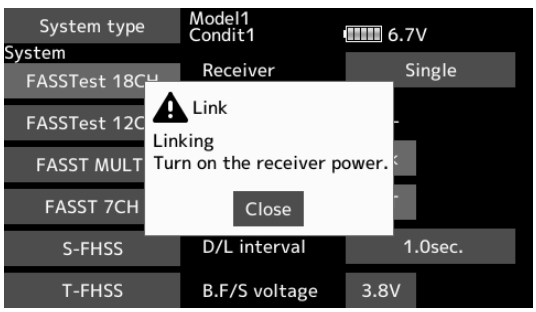

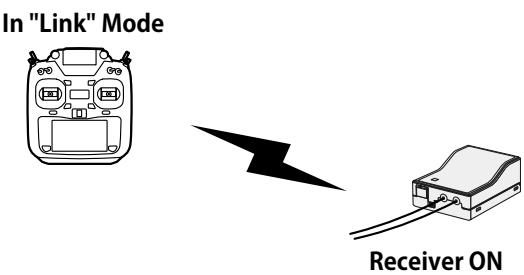

8. If linking fails, an error message is displayed. Bring the transmitter closer to the receiver and repeat the procedure above from Step 2.

9. ACT will be chosen if telemetry is used.
It is INH when not using it.

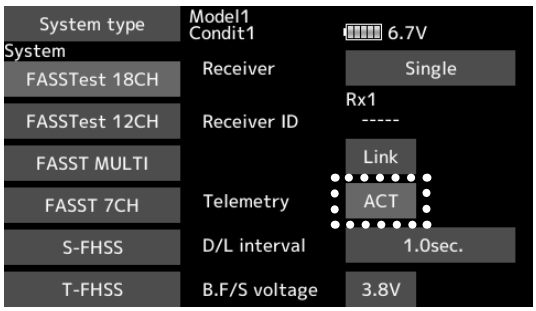

10. When a telemetry function is enabled, the receiving interval (down-link interval) of sensor data can be changed. If a D/L interval is increased, the response of the sensor data display becomes slower, but stick response will improve.
Initial value: 1.0s
Adjustment range: 0.1s~2.0s

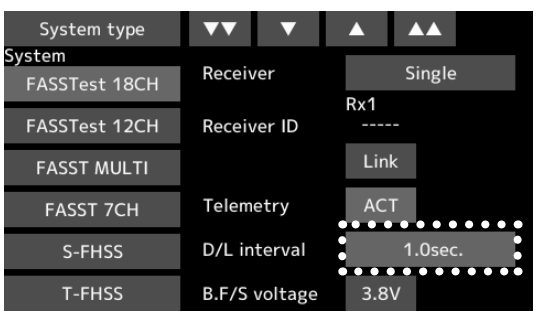

*If there are many FASSTest (T-FHSS) systems turned on around your receiver, it might not link to your transmitter. In this case, even if the receiver's LED stays solid green, unfortunately the receiver might have established a link to one of other transmitters. This is very dangerous if you do not notice this situation. In order to avoid the problem, we strongly recommend you to double check whether your receiver is really under control by your transmitter by giving the stick input and then checking the servo response.

*Do not perform the linking operation when the drive motor is connected or the engine is running.

*When you use two receivers, please be sure to setup a "Rx1" and "Rx2" in the "dual" mode.

*Telemetry function cannot be used for the 2nd receiver. → FASSTest18CH

*Telemetry function cannot be used for the dual receiver. → T-FHSS, FASSTest12CH

*You must link one receiver at a time. If both power supplies to the receivers are switched on simultaneously, data is received incorrectly by the transmitter.

*You cannot link three receivers.

*Link is required when a system type is changed.

*Linking is required whenever a new model is made.

*FASST MULTI/FASST 7CH cannot be selected for Europe.

⚠ WARNING

After the linking is done, please cycle receiver power and check that the receiver to be linked is really under the control of the transmitter.

Do not perform the linking procedure with motor's main wire connected or with the engine operating as it may result in serious injury.

After setting

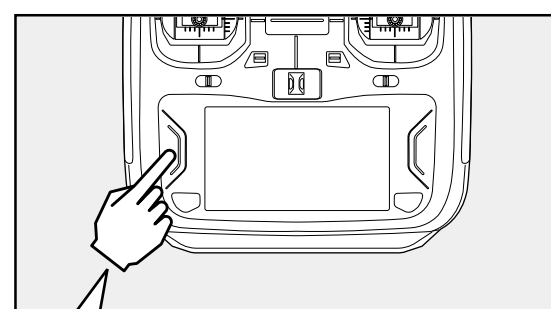

After setting, press a HOME/EXIT button

Model ID *FASSTest, T-FHSS*

For the sake of safety, this function does not operate the receiver if the model data of the model program settings that does not match the aircraft is used by mistake.

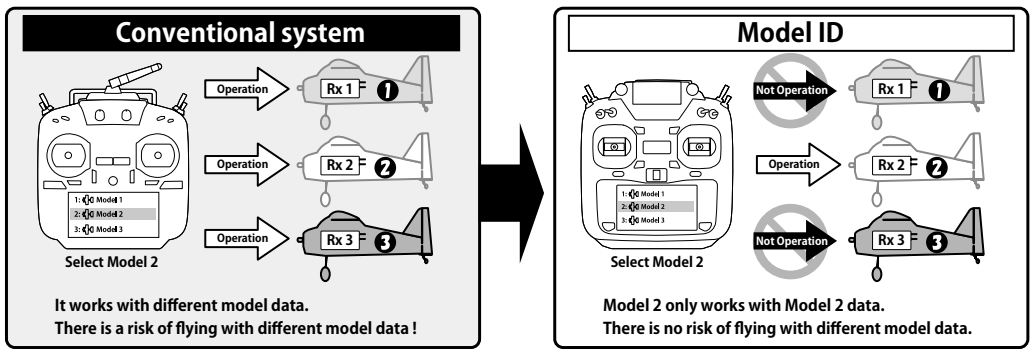

Link is required when a new model is made from a model selection.

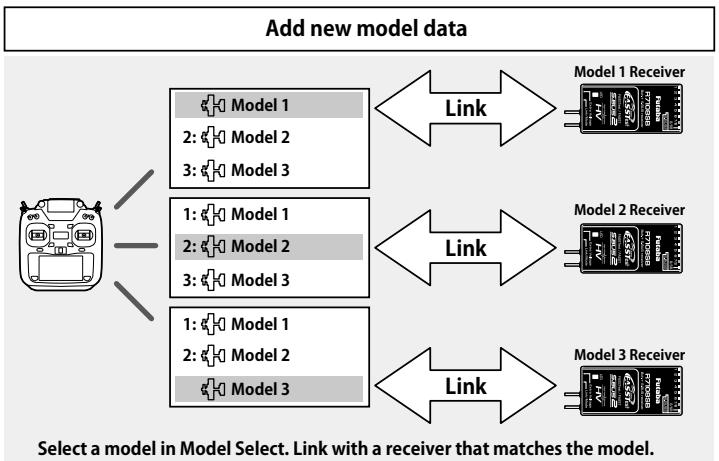

- In the system types (FASSTest, T-FHSS) compatible with the model ID function, a unique ID number (model ID) is set to each model data. Linking with a receiver stores the model ID of the model data in that receiver. The receiver operates only when it receives radio waves transmitted using model data that matches the stored model ID. As a result, the receiver does not operate even if model data of an unintended setting is used by mistake, so it is possible to prevent a malfunction due to a model selection mistake.
- If you want to use different model data from the model data that you have been using, link again.
- Model ID feature is enabled only if the system type is FASSTest or T-FHSS. Please note that model ID function can not be used on other systems.
- For safety reasons, model ID function can not be disabled.
- Model data that can be stored in internal memory is up to 250 models.
- Model ID is automatically set when copying or adding model data.
- R3004SB receiver does not support model ID function. When using the R3004SB, set “Receiver” in the system type screen T-FHSS mode setting to [R3004SB]. When using other T-FHSS compatible receivers, set "Receiver" to [Normal].

Range Testing Your R/C System

It is extremely important to range check your models prior to each flying session. This enables you to ensure that everything is functioning as it should and to obtain maximum enjoyment from your time flying. The T16IZ transmitter incorporates a system that reduces its power output and allows you to perform such a range check.

Range check mode

1. While pushing "U.MENU/MON." button.

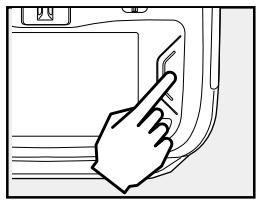

2. THR Stick Slow. **3. T16IZ Power ON.**

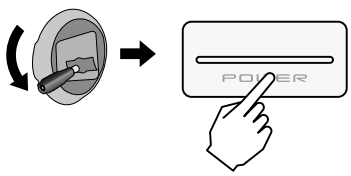

4. Select "Range check" at the System menu.

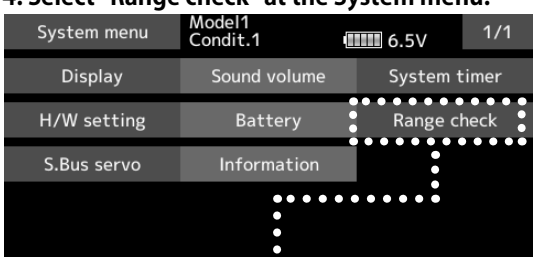

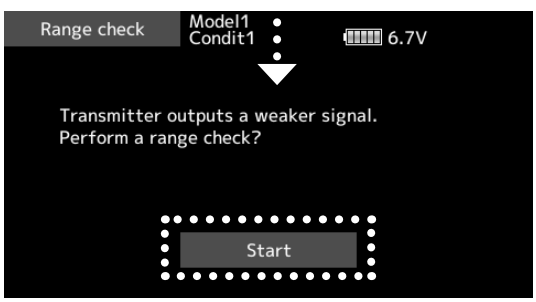

5. "Start" tap.

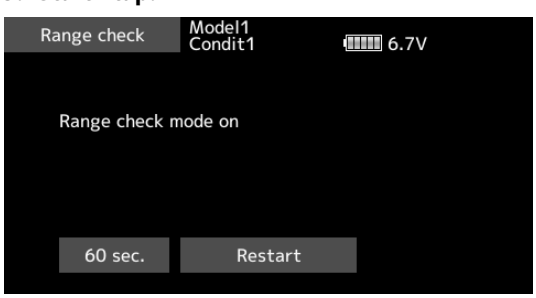

6. The HOME/EXIT button is pressed to end a range check.

During this mode, the RF power output is reduced so the range test can be performed. In addition, when this mode is activated the right LED on the front of the transmitter starts blinking and the transmitter gives users a warning with a beeping sound.

The "Range check mode" continues for 60 seconds and after that the power will return to the normal level. To exit the "Range check mode" before the 60 seconds, press the "HOME/EXIT" button. NEVER start flying when the "Range check mode" is active.

Should you require additional time to perform a range check, highlight Restart before your time expires and tap the screen one time.

Range check procedure

1. With the "Range check mode" on, walk away from the model while simultaneously operating the controls. Have an assistant stand by the model to confirm that all controls are completely and correctly operational. You should be able to walk approximately 30-50 paces from the model without losing control.
2. If everything operates correctly, return to the model. Set the transmitter in a safe, yet accessible, location so it will be within reach after starting the engine or motor. Be certain the throttle stick is in the low throttle position, then start the engine or motor. Perform another range check with your assistant holding the aircraft with the engine running at various speeds. If the servos jitter or move inadvertently, there may be a problem. We would strongly suggest you do not fly until the source of the difficulty has been determined. Look for loose servo connections or binding pushrods. Also, be certain that the battery has been fully charged.

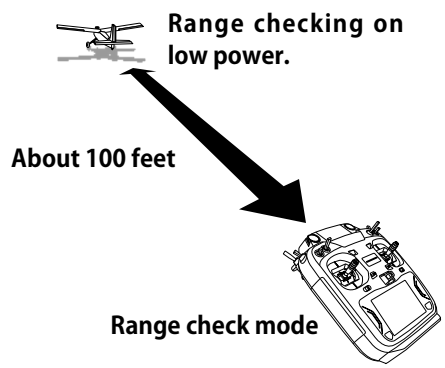

⚠ WARNING

Do not fly in the range check mode.

*Since the range of the radio waves is short, if the model is too far from the transmitter, control will be lost and the model will crash.

Servo Connection by Model Type

The T16IZ transmitter channels are automatically assigned for optimal combination according to the type selected with the Model type function of the Linkage menu. The channel assignment (initial setting) for each model type is shown below. Connect the receiver and servos to match the type used.

*The set channels can be checked at the Function screen of the Linkage menu. The channel assignments can also be changed. For more information, read the description of the Function menu.

Airplane/glider

●Normal tail and V tail

RX CH	1AIL		2AIL		2AIL+1FLAP		2AIL+2FLAP		2AIL+4FLAP		4AIL+2FLAP		4AIL+4FLAP	
	Airplane	Glider	Airplane	Glider	Airplane	Glider	Airplane	Glider	Airplane	Glider	Airplane	Glider	Airplane	Glider
1	Aileron	Aileron	Aileron	Aileron	Aileron	Aileron	Aileron	Aileron	Aileron	Aileron	Aileron	Aileron	Aileron	Aileron
2	Elevator	Elevator	Elevator	Elevator	Elevator	Elevator	Elevator	Elevator	Elevator	Elevator	Elevator	Elevator	Elevator	Elevator
3	Throttle	Motor	Throttle	Motor	Throttle	Motor	Throttle	Motor	Throttle	Rudder	Throttle	Rudder	Throttle	Rudder
4	Rudder	Rudder	Rudder	Rudder	Rudder	Rudder	Rudder	Rudder	Rudder	Aileron2	Rudder	Aileron2	Rudder	Aileron2
5	Gear	AUX6	Gear	AUX6	Gear	AUX6	Aileron2	Aileron2	Gear	Flap	Gear	Aileron3	Gear	Aileron3
6	Airbrake	Airbrake	Aileron2	Aileron2	Aileron2	Aileron2	Flap	Flap	Aileron2	Flap2	Aileron2	Aileron4	Aileron2	Aileron4
7	AUX5	AUX5	AUX5	AUX5	Flap	Flap	Flap2	Flap2	Flap	Flap3	Aileron3	Flap	Aileron3	Flap
8	AUX4	AUX4	AUX4	AUX4	AUX5	AUX5	Gear	AUX6	Flap2	Flap4	Aileron4	Flap2	Aileron4	Flap2
9	AUX3	AUX3	AUX3	AUX3	AUX4	AUX4	AUX5	AUX5	Flap3	Motor	Flap	Motor	Flap	Flap3
10	AUX2	AUX2	AUX2	AUX2	AUX3	AUX3	AUX4	AUX4	Flap4	AUX6	Flap2	AUX6	Flap2	Flap4
11	AUX1	AUX1	AUX1	AUX1	AUX2	AUX2	AUX3	AUX3	AUX5	AUX5	AUX5	AUX5	Flap3	Motor
12	AUX1	AUX1	AUX1	AUX1	AUX1	AUX1	AUX2	AUX2	AUX4	AUX4	AUX4	AUX4	Flap4	AUX6
13	AUX1	AUX1	AUX1	AUX1	AUX1	AUX1	AUX1	AUX1	AUX3	AUX3	AUX3	AUX3	AUX5	AUX5
14	AUX1	AUX1	AUX1	AUX1	AUX1	AUX1	AUX1	AUX1	AUX2	AUX2	AUX2	AUX2	AUX4	AUX4
15	AUX1	AUX1	AUX1	Butterfly	AUX1	Butterfly	AUX1	Butterfly	AUX1	Butterfly	AUX1	Butterfly	AUX3	Butterfly
16	AUX1	AUX1	Camber	Camber	Camber	Camber	Camber	Camber	Camber	Camber	Camber	Camber	Camber	Camber
DG1	SW	SW	SW	SW	SW	SW	SW	SW	SW	SW	SW	SW	SW	SW
DG2	SW	SW	SW	SW	SW	SW	SW	SW	SW	SW	SW	SW	SW	SW

The output CH of each system

FASST 7CH

S-FHSS

FASSTest 12CH

FASSTest 18CH FASST MULT T-FHSS

*FASST MULTI/FASST 7CH cannot be selected for Europe.

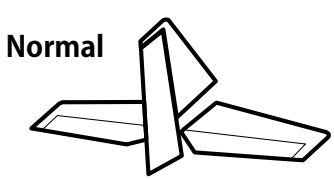

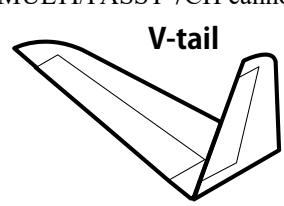

Airplane/glider

●**Ailevator**

RX CH	1AIL		2AIL		2AIL+1FLAP		2AIL+2FLAP		2AIL+4FLAP		4AIL+2FLAP		4AIL+4FLAP	
	Airplane	Glider	Airplane	Glider	Airplane	Glider	Airplane	Glider	Airplane	Glider	Airplane	Glider	Airplane	Glider
1	Aileron	Aileron	Aileron	Aileron	Aileron	Aileron	Aileron	Aileron	Aileron	Aileron	Aileron	Aileron	Aileron	Aileron
2	Elevator	Elevator	Elevator	Elevator	Elevator	Elevator	Elevator	Elevator	Elevator	Elevator	Elevator	Elevator	Elevator	Elevator
3	Throttle	Motor	Throttle	Motor	Throttle	Motor	Throttle	Motor	Throttle	Motor	Throttle	Motor	Throttle	Motor
4	Rudder	Rudder	Rudder	Rudder	Rudder	Rudder	Rudder	Rudder	Rudder	Rudder	Rudder	Rudder	Rudder	Rudder
5	Gear	AUX6	Gear	AUX6	Elevator2	Elevator2	Elevator2	Elevator2	Elevator2	Elevator2	Elevator2	Elevator2	Elevator2	Elevator2
6	Airbrake	Airbrake	Aileron2	Aileron2	Aileron2	Aileron2	Aileron2	Aileron2	Aileron2	Aileron2	Aileron2	Aileron2	Aileron2	Aileron2
7	Elevator2	Elevator2	Elevator2	Elevator2	Flap	Flap	Flap	Flap	Flap	Flap	Aileron3	Aileron3	Aileron3	Aileron3
8	AUX5	AUX5	AUX5	AUX5	Gear	AUX6	Flap2	Flap2	Flap2	Flap2	Aileron4	Aileron4	Aileron4	Aileron4
9	AUX4	AUX4	AUX4	AUX4	AUX5	AUX5	Gear	AUX6	Flap3	Flap3	Flap	Flap	Flap	Flap
10	AUX3	AUX3	AUX3	AUX3	AUX4	AUX4	AUX5	AUX5	Flap4	Flap4	Flap2	Flap2	Flap2	Flap2
11	AUX2	AUX2	AUX2	AUX2	AUX3	AUX3	AUX4	AUX4	Gear	AUX6	Gear	AUX6	Flap3	Flap3
12	AUX1	AUX1	AUX1	AUX1	AUX2	AUX2	AUX3	AUX3	AUX5	AUX5	AUX5	AUX5	Flap4	Flap4
13	AUX1	AUX1	AUX1	AUX1	AUX1	AUX1	AUX2	AUX2	AUX4	AUX4	AUX4	AUX4	Gear	AUX6
14	AUX1	AUX1	AUX1	AUX1	AUX1	AUX1	AUX1	AUX1	AUX3	AUX3	AUX3	AUX3	AUX5	AUX5
15	AUX1	AUX1	AUX1	Butterfly	AUX1	Butterfly	AUX1	Butterfly	AUX2	Butterfly	AUX2	Butterfly	AUX4	Butterfly
16	AUX1	AUX1	Camber	Camber	Camber	Camber	Camber	Camber	Camber	Camber	Camber	Camber	Camber	Camber
DG1	SW	SW	SW	SW	SW	SW	SW	SW	SW	SW	SW	SW	SW	SW
DG2	SW	SW	SW	SW	SW	SW	SW	SW	SW	SW	SW	SW	SW	SW

The output CH of each system

FASSTest 18CH FASST MULT T-FHSS

FASSTest 12CH

S-FHSS

FASST 7CH

*FASST MULTI/FASST 7CH cannot be selected for Europe.

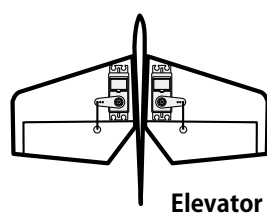

Elevator 2 servo

Airplane/glider

●**Tailless wing**

RX CH	2AIL		2AIL+1FLAP		2AIL+2FLAP		2AIL+4FLAP		4AIL+2FLAP		4AIL+4FLAP	
	Airplane	Glider	Airplane	Glider	Airplane	Glider	Airplane	Glider	Airplane	Glider	Airplane	Glider
1	Aileron	Aileron	Aileron	Aileron	Aileron	Aileron	Aileron	Aileron	Aileron	Aileron	Aileron	Aileron
2	AUX4	AUX4	AUX4	AUX4	AUX4	AUX4	Aileron2	Aileron2	Aileron2	Aileron2	Aileron2	Aileron2
3	Throttle	Motor	Throttle	Motor	Throttle	Motor	Throttle	Motor	Throttle	Motor	Throttle	Motor
4	Rudder	Rudder	Rudder	Rudder	Rudder	Rudder	Rudder	Rudder	Rudder	Rudder	Rudder	Rudder
5	Gear	AUX6	Gear	AUX6	Aileron2	Aileron2	Flap	Flap	Aileron3	Aileron3	Aileron3	Aileron3
6	Aileron2	Aileron2	Aileron2	Aileron2	Flap	Flap	Flap2	Flap2	Aileron4	Aileron4	Aileron4	Aileron4
7	AUX5	AUX5	Flap	Flap	Flap2	Flap2	Flap3	Flap3	Flap	Flap	Flap	Flap
8	AUX3	AUX3	AUX5	AUX5	Gear	AUX6	Flap4	Flap4	Flap2	Flap2	Flap2	Flap2
9	AUX2	AUX2	AUX3	AUX3	AUX5	AUX5	AUX4	AUX4	AUX4	AUX4	Flap3	Flap3
10	AUX1	AUX1	AUX2	AUX2	AUX3	AUX3	Gear	AUX6	Gear	AUX6	Flap4	Flap4
11	AUX1	AUX1	AUX1	AUX1	AUX2	AUX2	AUX5	AUX5	AUX5	AUX5	AUX4	AUX4
12	AUX1	AUX1	AUX1	AUX1	AUX1	AUX1	AUX3	AUX3	AUX3	AUX3	Gear	AUX6
13	AUX1	AUX1	AUX1	AUX1	AUX1	AUX1	AUX2	AUX2	AUX2	AUX2	AUX5	AUX5
14	AUX1	AUX1	AUX1	Butterfly	AUX1	Butterfly	AUX1	Butterfly	AUX1	Butterfly	AUX3	Butterfly
15	Camber	Camber	Camber	Camber	Camber	Camber	Camber	Camber	Camber	Camber	Camber	Camber
16	Elevator	Elevator	Elevator	Elevator	Elevator	Elevator	Elevator	Elevator	Elevator	Elevator	Elevator	Elevator
DG1	SW	SW	SW	SW	SW	SW	SW	SW	SW	SW	SW	SW
DG2	SW	SW	SW	SW	SW	SW	SW	SW	SW	SW	SW	SW

The output CH of each system

FASST 7CH

S-FHSS

FASSTest 12CH

FASSTest 18CH

FASST MULT

T-FHSS

*FASST MULTI/FASST 7CH cannot be selected for Europe.

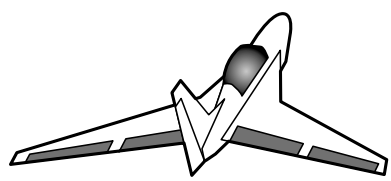

Flying Wing

●Tailless wing Winglet 2 Rudder

RX CH	2AIL		2AIL+1FLAP		2AIL+2FLAP		2AIL+4FLAP		4AIL+2FLAP		4AIL+4FLAP	
	Airplane	Glider	Airplane	Glider	Airplane	Glider	Airplane	Glider	Airplane	Glider	Airplane	Glider
1	Aileron	Aileron	Aileron	Aileron	Aileron	Aileron	Aileron	Aileron	Aileron	Aileron	Aileron	Aileron
2	Rudder2	Rudder2	Rudder2	Rudder2	Rudder2	Rudder2	Aileron2	Aileron2	Aileron2	Aileron2	Aileron2	Aileron2
3	Throttle	Motor	Throttle	Motor	Throttle	Motor	Throttle	Motor	Throttle	Motor	Throttle	Motor
4	Rudder	Rudder	Rudder	Rudder	Rudder	Rudder	Rudder	Rudder	Rudder	Rudder	Rudder	Rudder
5	Gear	AUX6	Gear	AUX6	Aileron2	Aileron2	Flap	Flap	Aileron3	Aileron3	Aileron3	Aileron3
6	Aileron2	Aileron2	Aileron2	Aileron2	Flap	Flap	Flap2	Flap2	Aileron4	Aileron4	Aileron4	Aileron4
7	AUX5	AUX5	Flap	Flap	Flap2	Flap2	Flap3	Flap3	Flap	Flap	Flap	Flap
8	AUX3	AUX3	AUX5	AUX5	Gear	AUX6	Flap4	Flap4	Flap2	Flap2	Flap2	Flap2
9	AUX2	AUX2	AUX3	AUX3	AUX5	AUX5	Rudder2	Rudder2	Rudder2	Rudder2	Flap3	Flap3
10	AUX1	AUX1	AUX2	AUX2	AUX3	AUX3	Gear	AUX6	Gear	AUX6	Flap4	Flap4
11	AUX1	AUX1	AUX1	AUX1	AUX2	AUX2	AUX5	AUX5	AUX5	AUX5	Rudder2	Rudder2
12	AUX1	AUX1	AUX1	AUX1	AUX1	AUX1	AUX3	AUX3	AUX3	AUX3	Gear	AUX6
13	AUX1	AUX1	AUX1	AUX1	AUX1	AUX1	AUX2	AUX2	AUX2	AUX2	AUX5	AUX5
14	AUX1	AUX1	AUX1	Butterfly	AUX1	Butterfly	AUX1	Butterfly	AUX1	Butterfly	AUX3	Butterfly
15	Camber	Camber	Camber	Camber	Camber	Camber	Camber	Camber	Camber	Camber	Camber	Camber
16	Elevator	Elevator	Elevator	Elevator	Elevator	Elevator	Elevator	Elevator	Elevator	Elevator	Elevator	Elevator
DG1	SW	SW	SW	SW	SW	SW	SW	SW	SW	SW	SW	SW
DG2	SW	SW	SW	SW	SW	SW	SW	SW	SW	SW	SW	SW

The output CH of each system

FASSTest 18CH FASST MULT T-FHSS

FASSTest 12CH

S-FHSS

FASST 7CH

*FASST MULTI/FASST 7CH cannot be selected for Europe.

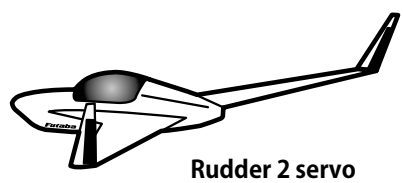

Rudder 2 servo

* Output channels differ by each system of a table. When using a system with few channels, there is a wing type which cannot be used. It cannot be used when there is a function required out of the range of the arrow of a figure.

Helicopter

●FASSTest 18CH / FASST MULTI / FASST 7CH / S-FHSS

CH	H-4/H-4X Swash	All other
1	Aileron	Aileron
2	Elevator	Elevator
3	Throttle	Throttle
4	Rudder	Rudder
5	Gyro	Gyro
6	Pitch	Pitch
7	Governor	Governor
8	Elevator2	Governor2
9	Gyro2	Gyro2
10	Gyro3	Gyro3
11	Governor2	Needle
12	Needle	AUX5
13	AUX4	
14	AUX3	
15	AUX2	
16	AUX1	
DG1	SW	
DG2	SW	

The output CH of each system: FASSTest 18CH, FASST MULT, T-FHSS, S-FHSS, FASST 7CH

●FASSTest 12CH

CH	H-4/H-4X Swash	All other
1	Aileron	Aileron
2	Elevator	Elevator
3	Throttle	Throttle
4	Elevator2	Rudder
5	Pitch	Pitch
6	Gyro	Gyro
7	Governor	Governor
8	Rudder	Governor2
9	Gyro2	Gyro2
10	Gyro3	Gyro3
DG1	SW	
DG2	SW	

The output CH of each system: FASSTest 12CH

*FASST MULTI/FASST 7CH cannot be selected for Europe.

Multicopter

CH	Multicopter
1	Aileron
2	Elevator
3	Throttle
4	Rudder
5	Gyro
6	Gyro2
7	Gyro3
8	Camera TILT
9	Camera PAN
10	Camera REC
11	Mode
12	AUX5
13	AUX4
14	AUX3
15	AUX2
16	AUX1
DG1	SW SD
DG2	SW SA

The output CH of each system: FASSTest 18CH, FASST MULT, T-FHSS, FASSTest 12CH, S-FHSS, FASST 7CH

*FASST MULTI/FASST 7CH cannot be selected for Europe.

SYSTEM MENU

The System menu sets up functions of the transmitter. This does not set up any model data.

- When the System menu button is tapped, the menu shown below is called up. Tap the function button that you want to enter.

System menu functions table

Display	Display adjustment.
Sound volume	Adjust the volume of: Other sound, Warning, Voice
System timer	Resets the system timer.
H/W setting	Stick mode selection (Mode 1 - Mode 4). J1-J4 sticks correction can be performed.
Battery	Battery alarm voltage setting. Auto power off time setting.
Range check	The output of the transmitter is lowered, for Range checking.
S.Bus servo	S.Bus servo setting.
Information	Sets the User name, Language, and Unit system. Displays the program version, and micro SD card information.

LINKAGE MENU

The Linkage menu is made up of functions which perform model addition, model type selection, end point setting, and other model basic settings.

Linkage menu functions table

Servo monitor	Displays the servo test and operation position
Model select	Model addition, call, deletion, copy, model name setting
Model type	Model type, wing type, tail type, swash type, selection
Servo reverse	Servo direction reversal
End point	Servo basic rate adjustment and limit setting
Servo speed	Servo speed setting
Sub-trim	Adjusts the neutral position of each servo
Function	Channel assignment of each function can be changed
Fail safe	Fail safe function and battery fail safe function setting
System type	System mode selection, link of a transmitter and receiver, telemetry mode selection
Trim setting	Control step amount and mode selection of the digital trim
Throttle cut	Stops the engine safely and easily
Idle down	Lowers the idle speed of the engine
Swash ring	Limits the swash plate travel to within a fixed range. (helicopter only)
Swash	Swash AFR and linkage correction function (helicopter only except swash type H-1)
Stick alarm	Can be set so that an audible alarm sounds when the throttle stick reaches the set position.
Timer	Timer setting
Function name	Function name can be changed
Sensor	Various telemetry sensors setting
Telemetry	Displays various data sent from the receiver
Tele.setting	Telemetry data log
Trainer	Starts and sets the trainer system.
Warning setting	Mixing, throttle position warning reset
User menu setting	Original menu making
Date reset	Model memory set data reset (by item)

MODEL MENU (Airplane/Glider functions)

The dedicated mixes, etc. usable when airplane or glider model type is selected are displayed in this Model menu functions section. First use the Model type function of the Linkage menu to preset the model type, wing type, and tail type matched to the fuselage used. Other settings reset the data used in mixing function, etc.

These dedicated mixes can be set for each flight condition, as required. When you want to use the system by switching the settings for each condition by switch or stick position, use the Condition select function to add flight conditions. (Up to 8 conditions can be used)

Note: The T16IZ is designed so that the airplane and glider model types can handle aircraft of the same wing type.
The functions common to airplanes and gliders, except some dedicated functions, are summarized without regard to the model type.
The setting items are different, depending on the number of servos, etc. according to the wing type used. The setup screens in the instruction manual are typical examples.

Model menu (Airplane/Glider) functions table

Servo monitor	Displays the servo test and operation position	
Condition select	Flight conditions addition, deletion, copy, condition renaming, and condition delay can be set.	
AFR	Sets the angle and curve of all the operation functions.	
Dual rate	D/R curve which can be switched with a switch, etc. can also be added.	
Program. mixes	Program mixing which can be freely customized. Up to 10 mixes can be used for each condition.	
Aileron differential	This function adjusts the left and right ailerons. Roll axis correction and fine tuning with a VR are also possible. This is convenient when making settings during flight.	[Airplane/glider, 2 ailerons or more]
Flap setting	The flaps can be adjusted independently. For a 4 flaps model, the camber flaps can be mixed with the brake flaps.	[Airplane/glider, 2 flaps or more]
AIL → Camber flap	This mix operates the camber flaps in the aileron mode. It improves the operation characteristic of the roll axis.	[Airplane/glider, 2 ailerons + 2 flaps or more]
AIL → Brake flap	This mix operates the brake flaps in the aileron mode. It improves the operation characteristic of the roll axis.	[Airplane/glider, 4 flaps or more]
Aileron → Rudder	This mix is used when you want to operate the rudder at aileron operation. Banking at a shallow bank angle is possible.	[Airplane/glider, general]
Elevator → Camber	This mix is used when you want to the mix camber flaps with elevator operation. Lifting force can be increased at elevators up.	[Airplane/glider, 2 ailerons or more]
Camber mixing	This mix adjusts the camber and corrects the elevators.	[Airplane/glider, 2 ailerons or more]
Airbrake → ELE	This mix is used to correct operation of the airbrakes (spoilers) when landing.	[Airplane/glider, general]
Camber flap → ELE	This mix is used to correct for attitude changes when the camber flaps are being used.	[Airplane/glider, 2 ailerons + 1 flap or more]
Rudder → Aileron	This function is used to correct roll knife edge, etc. of stunt planes.	[Airplane/glider, general]
Rudder → Elevator	This function is used to correct roll maneuvers, knife edge, etc. of stunt planes.	[Airplane, general]
Butterfly (Crow)	This function is used when powerful brake operation is necessary.	[Glider, 2 ailerons or more]
Trim mix 1/2	The ailerons, elevators, and flaps trim offset rate can be called by switch or condition selection.	[Glider general]
Snap roll	This function selects the snap roll switch and adjusts the steering angle of each rudder. Servo speed can also be adjusted.	[Airplane general]
Air brake	This function is used when airbrakes are necessary when landing or when diving, etc. during flight.	[Airplane, general]
Gyro	This is a dedicated mix when a GYA Series gyro is used.	[Airplane/glider/multicopter, general]
Ailevator	This function adjusts the elevators and ailerons of models with elevator specifications.	[Airplane/glider, elevator specifications]
Acceleration	Allows a brief "overload" in response to sudden Elevator, Elevator → Camber, and Ail → Rudder.	[Glider general]
Motor	The operation speed when the motor of F5B and other EP gliders is started by switch can be set.	[Airplane/glider, general]
V-Tail	This function adjusts the elevators and rudder of V-tail models.	[Airplane/glider, V-tail specifications]
Winglet	This function adjusts the left and right rudders of winglet models.	[Airplane/glider, winglet specifications]

MODEL MENU (Helicopter functions)

This section contains information on the commands that apply to helicopters only. For instructions on airplane, glider and multicopter, refer to the sections pertaining to those aircraft.

Use the Model type function in the Linkage menu to select the swash type matched to the fuselage beforehand.

Also, add flight conditions at the Condition Select screen if necessary before setting the model data at each function. (Up to 8 conditions can be used)

The AFR function, dual rate function and other functions common to all model types, are described in a separate section.

◆ Condition hold

When performing adjustments, such as idling up, when the engine is engaged, keep the throttle stable so as to prevent the engine from revving too high. Once your adjustments are complete, always make sure to set the function to [OFF].

⚠ WARNING

For safety reasons, when performing individual adjustments it is recommended that you shut off the engine and disconnect the motor to prevent rotation.

*Sudden, abrupt rotation can result in death or serious injury.

*Condition hold ON/OFF operation is possible under normal conditions and the throttle stick is more than 1/3rd into the slow throttle range. Throttle servos will remain at the throttle stick position during ON operation.

● ON/OFF operation on the Home screen

Under the conditions described above, tap the Condition hold [OFF] displayed on the screen.

During function operation, Condition hold will display [ON] and an alarm will sound.

Model menu (Helicopter) functions table

Servo monitor	Displays the servo test and operation position
Condition select	Flight conditions addition, deletion, copy, condition renaming, and condition delay can be set.
AFR	Sets the angle and curve of all the operation functions.
Dual rate	D/R curve which can be switched with a switch, etc. can also be added.
Program. mixes	Program mixing which can be freely customized. Up to 10 mixes can be used for each condition.
Pitch curve	Pitch curve and hovering trim adjustment
Throttle curve	Throttle curve and hovering trim adjustment
Acceleration	Allows a brief "overload" in response to sudden throttle and pitch commands
Throttle hold	Moves the throttle to idle during autorotation
Swash mixing	Compensates for each control response
Throttle mixing	Compensates for power loss when cyclic applied
Pitch → Needle	Adjusts response curve in different flight conditions
Pitch → Rudder	Handles torque changes from pitch angle inputs
Gyro	Used to switch gyro sensitivity
Governor	Used to switch RPM of the helicopter's head
Gyro setting	Detailed setting of CGY755/CGY760R

MODEL MENU (Multicopter functions)

The dedicated mixes, etc. usable when multicopter model type is selected are displayed in this Model menu functions section.

These dedicated mixes can be set for each flight condition, as required. When you want to use the system by switching the settings for each condition by switch or stick position, use the Condition select function to add flight conditions. (Up to 8 conditions can be used)

Model menu (Multicopter) functions table

Servo monitor	Displays the servo test and operation position
Condition select	Flight conditions addition, deletion, copy, condition renaming, and condition delay can be set.
AFR	Sets the angle and curve of all the operation functions.
Dual rate	D/R curve which can be switched with a switch, etc. can also be added.
Program. mixes	Program mixing which can be freely customized. Up to 10 mixes can be used for each condition.

This manual is a simplified version. Details of the function are not described. Refer to country distributor WEB for detailed function explanation.

http://www.futabausa.com

(http://www.rc.futaba.co.jp/english)

This product uses the following open source software.

■ Google Noto Fonts

This Font Software is licensed under the SIL Open Font License, Version 1.1. This license is copied below, and is also available with a FAQ at: http://scripts.sil.org/OFL

SIL OPEN FONT LICENSE Version 1.1 - 26 February 2007

PREAMBLE
The goals of the Open Font License (OFL) are to stimulate worldwide development of collaborative font projects, to support the font creation efforts of academic and linguistic communities, and to provide a free and open framework in which fonts may be shared and improved in partnership with others. The OFL allows the licensed fonts to be used, studied, modified and redistributed freely as long as they are not sold by themselves. The fonts, including any derivative works, can be bundled, embedded, redistributed and/or sold with any software provided that any reserved names are not used by derivative works. The fonts and derivatives, however, cannot be released under any other type of license. The requirement for fonts to remain under this license does not apply to any document created using the fonts or their derivatives.
DEFINITIONS
"Font Software" refers to the set of files released by the Copyright Holder(s) under this license and clearly marked as such. This may include source files, build scripts and documentation. "Reserved Font Name" refers to any names specified as such after the copyright statement(s). "Original Version" refers to the collection of Font Software components as distributed by the Copyright Holder(s). "Modified Version" refers to any derivative made by adding to, deleting, or substituting -- in part or in whole -- any of the components of the Original Version, by changing formats or by porting the Font Software to a new environment. "Author" refers to any designer, engineer, programmer, technical writer or other person who contributed to the Font Software.
PERMISSION & CONDITIONS
Permission is hereby granted, free of charge, to any person obtaining a copy of the Font Software, to use, study, copy, merge, embed, modify, redistribute, and sell modified and unmodified copies of the Font Software, subject to the following conditions:
1) Neither the Font Software nor any of its individual components, in Original or Modified Versions, may be sold by itself.
2) Original or Modified Versions of the Font Software may be bundled, redistributed and/or sold with any software, provided that each copy contains the above copyright notice and this license. These can be included either as stand-alone text files, human-readable headers or in the appropriate machine-readable metadata fields within text or binary files as long as those fields can be easily viewed by the user.
3) No Modified Version of the Font Software may use the Reserved Font Name(s) unless explicit written permission is granted by the corresponding Copyright Holder. This restriction only applies to the primary font name as presented to the users.
4) The name(s) of the Copyright Holder(s) or the Author(s) of the Font Software shall not be used to promote, endorse or advertise any Modified Version, except to acknowledge the contribution(s) of the Copyright Holder(s) and the Author(s) or with their explicit written permission.
5) The Font Software, modified or unmodified, in part or in whole, must be distributed entirely under this license, and must not be distributed under any other license. The requirement for fonts to remain under this license does not apply to any document created using the Font Software.
TERMINATION
This license becomes null and void if any of the above conditions are not met.
DISCLAIMER
THE FONT SOFTWARE IS PROVIDED "AS IS", WITHOUT WARRANTY OF ANY KIND, EXPRESS OR IMPLIED, INCLUDING BUT NOT LIMITED TO ANY WARRANTIES OF MERCHANTABILITY, FITNESS FOR A PARTICULAR PURPOSE AND NONINFRINGEMENT OF COPYRIGHT, PATENT, TRADEMARK, OR OTHER RIGHT. IN NO EVENT SHALL THE COPYRIGHT HOLDER BE LIABLE FOR ANY CLAIM, DAMAGES OR OTHER LIABILITY, INCLUDING ANY GENERAL, SPECIAL, INDIRECT, INCIDENTAL, OR CONSEQUENTIAL DAMAGES, WHETHER IN AN ACTION OF CONTRACT, TORT OR OTHERWISE, ARISING FROM, OUT OF THE USE OR INABILITY TO USE THE FONT SOFTWARE OR FROM OTHER DEALINGS IN THE FONT SOFTWARE.

FUTABA CORPORATION

Hobby Radio Control Business Center　Sales & Marketing Department
1080 Yabutsuka, Chosei-mura, Chosei-gun, Chiba-ken, 299-4395, Japan
TEL: +81-475-32-6051, FAX: +81-475-32-2915

©FUTABA CORPORATION　2020, 9 (1)

T16IZ

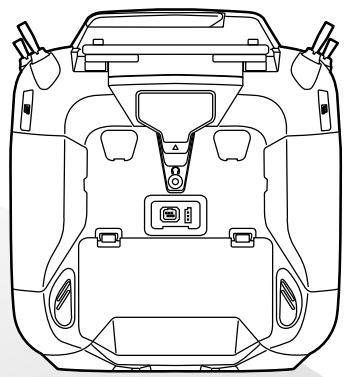

Futaba