3PK

3-CHANNEL RADIO CONTROL SYSTEM INSTRUCTION MANUAL

3PK with Optional Accessory Offset Adapter Installed

Futaba© Digital Proportional R/C System

Technical updates and additional programming examples available at: **http://www.futaba-rc.com/faq/faq-3pk.html**

Entire Contents © Copyright 2002

Transmitter Controls

***The switches, knobs and trimmers may all be reassigned. (see pp. 34-35)**

LCD screen

Pilot lamp

Edit buttons

(See page 12 for instructions to change colors.)

Antenna

Digital trim 1 (DT1) (default steering trim)
(See page 9 for operating instructions.)

Digital trim 3 (DT3)
(See page 9 for operating instructions.)

Digital Dial 3 (DL3) (default CH3 knob)

DSC Port

Charge Port

CAMPac

Digital trim 2 (DT2) (default throttle trim)
(See page 9 for operating instructions.)

Power switch

Mechanical ATL adjusting screw
(See page 50 for the adjustment instructions.)

Push switch 1 (PS1)

Digital Dial 1 (DL1) (default steering dual rate)
(See page 9 for the operating instructions.)

Throttle trigger

Steering wheel

Digital Dial 2 (DL2) (default ATL)
(See page 9 for the operating instructions.)

Push switch 2 (PS2)

Sound port
Use a commercial earphone with a 3.5mm diameter plug.

Grip Handle

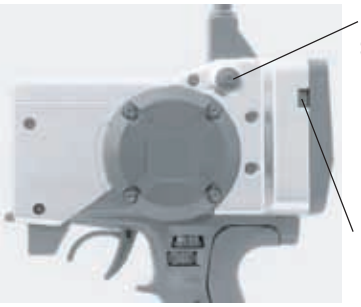

Push switch 3 (PS3)

Display switch

Precautions when turning the power switch on and off.

When the data is changed using the edit keys or trim levers, wait at least two seconds before turning off the power. If the power is turned off within two seconds after the data was changed, the new data will not be written to memory.

DEFAULT ASSIGNMENT TABLE

The factory default functions activated by the switches and knobs are shown below. Default assignments may be changed using the FUNC-DIAL and FUNC-SW programming (See pp. 34-35.) Features assigned to DL1, 2, 3, and DT1, 2, 3 are displayed at all times on right side of LCD screen.

CONTROL	DEFAULT
DT1	Steering trim
DT2	Throttle trim
DT3	NONE
DL1	Steering dual rate
DL2	ATL
DL3	Channel 3
PS1	NONE
PS2	NONE
PS3	NONE

TABLE OF CONTENTS

Note that in the text of this manual any time we are using a feature's specialized name or abbreviation as seen on the screen of the 3PK, that name, feature, or abbreviation will be exactly as seen on the radio's screen, including capitalization, and shown in a **DIFFERENT TYPE STYLE** *for clarity.*

INTRODUCTION

- Transmitter Controls and Defaults 2
- Owner's Manual and Additional Technical Help 4
- Support and Service 4
- Contents and Technical Specifications 5
- Optional Accessories 5
- A Quick Introduction to the 3PK System 6
- Getting to Know the Transmitter 8
  - Display Switch 8
  - Digital Trim Operation 9
  - Digital Grip Dial Operation 9
- Installation 10

PROGRAMMING 11

- Menu Selection Overview 11
- Direct Selection Menu Overview 11

- **LV1** Functions 12
  - Level Selection **LEVEL-SEL** 12
  - System Settings **SYSTEM** 13
    - Backlighting **LHT-MODE** 13
    - Backlighting time **LHT-TIME** 13
    - LCD contrast **CONTRAST** 13
    - Buzzer tone **BUZ-TONE** 13
    - LED pilot lamp **LED-MODE** 13
    - Home screen display **DISPL-SEL** 13
  - Model Selection **MDL-SEL** 14
  - Model Name **MDL-NAME** 15
    - User Name (set within **MDL-NAME**) 15
  - Modulation **MOD-MODE** 16
  - Failsafe and Battery Failsafe **FAIL-SAFE** 17
  - Servo Reversing **CH-REV** 18
  - End Point Adjustment **CH-EPA** 18
  - Exponential **ST-EXP, TH-EXP** 20
  - Sub-Trim **SUB-TRIM** 22

- **LV2** Functions 23
  - Speed **ST-SPEED, TH-SPEED** 23
  - ABS **ABS** 24
  - Throttle Acceleration **TH-ACCEL** 26
  - Idle-up **IDLE-UP** 27
  - Auto-Start/Engine Cut **AT-START** 28
  - Timer **TIMER** 30
  - Lap List **LAP-LIST** 31
  - Model Reset **MDL-RES** 32
  - Model Copy **MDL-COPY** 33
  - Function **FUNC-SW, FUNC-DIAL** 34
  - Direct Selection Menu Options **DIRC-CALL** 36
- **LV3** Functions 37
  - Throttle Electronic ATL **TH-ATL** 37
  - Steering Dual Rates **ST-D/R** 38
  - Servo Display **SERVO** 39
  - Channel 3 Position **CH3-POSI** 40
  - Programmable Mixes **PRG-MIX1, PRG-MIX2** 40
  - Brake Mix **BRAKE-MIX** 42
  - Boat Mode **BOAT-MODE** 43
  - MC Setup **MC-SETUP** 44
  - Adjuster **ADJUSTER** 45

APPENDICES 46

- Appendix I - Precautions and Warnings 46
  - Application, Export and Reconstruction 46
  - Liability and Warranty 46
  - Battery Recycling 46
  - Meaning of Special Markings 47
  - Safety Precautions (DO NOT operate without reading) 48
  - Mandatory Procedures for Using HRS Receivers 48
  - Caring for your NiCd Batteries 49
- Appendix II - Adjustments, Modifications and Replacements
  - Mechanical ATL/Wheel Tension Adjustment 50
  - Changing Wheel Position and Modifying for Left Hand Use 51
- Appendix III - Error Displays 54

- GLOSSARY/INDEX 56
- Quick Setup for Nitro Engines 67
- Layout Reminder Guide 67
- Quick Start Guide ....Back Cover

INTRODUCTION

Thank you for purchasing a Futaba® digital proportional R/C system. In order for you to make the best use of your system and to use it safely, please read this manual carefully. If you have any difficulties while using your system, please consult the manual, our online Frequently Asked Questions (on the web pages referenced below), your hobby dealer, or the Futaba Service Center.

Owner's Manual and Additional Technical Help

This manual has been carefully written to be as helpful to you, the new owner, as possible. There are many pages of setup procedures and examples. However, it need not be your sole resource of setup guidelines. For example, the back cover includes a quick-start set of instructions and the Frequently Asked Questions web page referenced below includes this type of step-by-step setup instructions for a variety of other model types.

Due to potential unforeseen changes in production procedures, the information contained in this manual is subject to change without notice. No part of this manual may be reproduced in any form, at any time, without prior permission.

Support and Service: It is recommended to have your Futaba equipment serviced annually during your hobby's "off season" to ensure safe operation.

IN NORTH AMERICA

Please feel free to contact the Futaba Service Center for assistance in operation, use and programming. Please be sure to regularly visit the Frequently Asked Questions web site referenced below. This page includes extensive programming, use, set up and safety information on your radio system and is updated regularly. Any technical updates and US manual corrections will be available on this web page. If you do not find the answers to your questions there, please see the end of our F.A.Q. area for information on contacting us via email for the most rapid and convenient response.

Don't have Internet access? Internet access is available at no charge at most public libraries, schools, and other public resources. We find internet support to be a fabulous reference for many modelers as items can be printed and saved for future reference, and can be accessed at any hour of the day, night, weekend or holiday. If you do not wish to access the internet for information, however, don't worry. Our support teams are available Monday through Friday 8-5 Central time to assist you.

FOR SERVICE ONLY:
Futaba Service Center
1610 Interstate Drive
Champaign IL 61822
www.hobbyservices.com

FOR SUPPORT:
(PROGRAMMING AND USER QUESTIONS)
Please start here for answers to most questions:
www.futaba-rc.com\faq\faq-3pk.html
FACSIMILE: 217-398-7721
PHONE: 217-398-8970 option 4

HOW TO SEND FOR SERVICE:
www.hobbyservices.com\techsupport\service-form-futaba.pdf
www.hobbyservices.com\techsupport\service-form-futaba.html

OUTSIDE NORTH AMERICA

Please contact your Futaba importer in your region of the world to assist you with any questions, problems or service needs.

Please recognize that all information in this manual, and all support availability, is based upon the systems sold in North America only. Products purchased elsewhere may vary. Always contact your region's support center for assistance.

CONTENTS AND TECHNICAL SPECIFICATIONS

(Specifications and ratings are subject to change without notice.)

Your system includes the following components:

- Transmitter, including RF module* (PK) and NiCd battery pack NT8F700B (FUTM1462)
- Receiver (R113iP or R203HRF)
- 110V wall charger FBC19B (USA)
- Frequency Flag/Number set
- Wheel position offset adapter (APA)

Transmitter T3PK (Pistol, 3 channels)
Operating system: FM/PCM1024/HRS
Transmitting frequency: 27, 75 MHz bands*
Modulation: FM/PPM, HRS-FM or PCM1024, switchable
Power supply: 9.6V NT8F700B NiCd battery
Current drain: 250 mA or less

Receiver R113iP (PCM Single conversion, 3 channels)
Receiving frequency: 27, 75 MHz bands *‡
Intermediate freq.: 455 kHz
Power requirement: 4.8V or 6.0V NiCd battery or
4.8V (4 cells) alkaline
Current drain: 18 mA
Size: 1.69" x 1.13" x 0.63" [42.7 x 28.7 x 16.0mm]
Weight: 0.74oz [21g]

Receiver R203HF (3 channels, HRS single conversion)
Receiving frequency: 27, 75 MHz bands *‡
Intermediate frequency: 455kHz
Power requirement: 6.0V only (shared with servos)
Current drain: 14mA
Size: 1" x 1-1/2" x 9/16" [25.6 x 37.7 x 14.3mm]
Weight: .6oz [17g]
Always use only: "HRS" mode on transmitter
6V Digital Servo, including throttle
6V NiCd battery

* Transmitter band may only be changed by changing the module. Receiver band cannot be changed. Band *cannot* be changed by simply changing crystals.

‡ Only 27, 75MHz bands are legal for R/C ground use in the North America.
Other bands are sold and used in other countries only.

The following additional accessories are available from your dealer. Refer to a Futaba catalog for more information:

- **CAM**Pac Memory module — the optional DP-16K **CAM**Pac increases your model storage capability (to 20 models from 10) and allows you to transfer programs to another 3PK transmitter. Note that data may not be transferred to/from any other model of transmitter (3PJ, etc).
  ⚠ **CAUTION - Insertion of a CAM**Pac **containing data of a different transmitter type (ex: 3PJ) will result in a complete CAM**Pac **data reset and loss of all data.**
- Transmitter battery pack — the NT8F700B (700mAh) transmitter NiCd battery pack may be easily exchanged with a fresh one to provide enough capacity for extended sessions.
- Y-harnesses, servo extensions, etc – Genuine Futaba extensions and y-harnesses, including a Heavy-Duty version with heavier gauge wire, are available to aid in your larger model and other installations.
- 5-cell (6.0V) receiver battery packs. All Futaba equipment (except that which is specifically labeled otherwise) is designed to work with 4.8V (NiCd 4 cells) or 6.0V (NiCd 5 cells or alkaline 4 cells). Using a 6.0V pack increases the current flow to the servos, which accelerates their rate of response and their torque. However, because of this faster current draw, a 5-cell battery pack of the same mAh rating will last approximately ¾ the time of a 4-cell pack.
  ⚠ **CAUTION - NOTE that HRS receivers require 6.0 volts and will not operate with 4.8V 4-cell packs.**
- Gyros – a variety of genuine Futaba gyros are available for your specialized model needs.
- FailSafe: the FS1 FailSafe may be used with standard PPM/FM receivers to return throttle to idle in case of a loss of signal, similar to the FailSafe function of PCM/HRS receivers. **NOTE that HRS receivers can not operate with the FS1.**
- Battery Holder (Transmitter)**:** This battery holder is necessary when using the transmitter with dry cell batteries. For a description of how to install the battery holder to the transmitter, see "NiCd Replacement" on page 54.
- DSC cord – allows setup and testing without transmitting. Requires DSC compatible receiver and DSC cord. With transmitter and receiver off, plug cord into transmitter and then into receiver battery slot. Turn on receiver power. All programming and setup may be done in this matter without transmitting. See glossary for a list of DSC-compatible receivers.

A QUICK INTRODUCTION TO THE 3PK SYSTEM

TRANSMITTER: 3PK

- Large graphic liquid-crystal display panel with 7 buttons for quick, easy set up.
    - 128x64 dot large graphic LCD/with adjustable backlighting and graph displays for exponential, etc.
- Includes 3 levels of flexibility to simplify programming for new users while still providing the most flexible system in the world to those who wish to use it.
    - **LV1: (Learning the system; quick setups, a single menu with enough for most models, including):**
        - **MDL-NAME** 10-character model name
        - **USR-NAME** 10-character user name
        - **MOD-MODE** FM/PCM/HRS selection to match each model's receiver
        - **EPA** End point adjustment for all servos
        - **SYSTEM** Adjust back light, contrast, volume, and items displayed on home screen
        - **LEVEL-SEL** Level Selection: Change programming complexity.
        - **MDL-SEL** Model Selection: Choose from the 10 models in memory or in optional CAMPac
        - **MDL-RES** Model Reset: Erase model memory for this model only
        - **MOD-MODE** Modulation: Transmission mode (PPM/PCM/HRS)
        - **FAILSAFE** Failsafe and Battery Failsafe: Program receiver's response in case of lost signal.
        - **CH-REV** Servo Reversing
        - **EXP** Exponential: Set exponential for braking and steering, and pick from 3 curve types for forward throttle,
    - **LV2: ("Let's Race!" Exploring 2 menus, with all of LV1, plus racer-focused features, including):**
        - **ABS** Simulates antilock brakes with fully adjustable pulsing effect
        - **SPEED** Adjustable throttle/steering servo response on input and release
        - **ACCEL** Throttle acceleration minimizes delay in nitro engine/braking response
        - **LAP** Record lap times, set training target times, display 99 recorded times
        - **AT-START/ENGINE CUT** Avoid wheel spins or shut boat engines off safely
        - **Idle-up** Increased throttle setting for easy starts
        - **FUNC** Assigns features to any of the 6 dials/trims and 3 switches
        - Direct selection menu options Customize the Direct Selection Menu
        - **MDL-COPY** Copy one model memory into another for experimenting and more
    - **LV3: (For the expert driver, boat or complex modeler, adds specialized features, including):**
        - **PRG-MIX 1,2** Programmable mixes in a car radio for your own special effects!
        - **BRAKE-MIX** Set up independently adjustable front and rear brakes.
        - **BOAT-MODE** Includes tilt steering (outboard/rudder mixing), ability to disable brake function
        - **ST-D/R** Two steering dual rates
        - **SERVO** Displays servo position to ease setup, test mixes prior to installation.
        - **TH-ATL** Adjust the brake's total travel
        - **CH-3** Adjust channel 3's midpoint
        - **MC SETUP** Setup ESCs with HRS receivers
        - **ADJUSTER** Re-calibrate the radio for perfect performance every time
- Supports Futaba's new High Response System (H.R.S. system) receivers, as well as FM and PCM1024.
    - H.R.S. provides response times **approximately 1/3** of that of an equivalent FM system.
- **CAM**Pac offers unlimited data storage.
- User-defined home screen data display and quick-access Direct Call menu for Level 2 and 3 users.
- Full function assignability for dials, digital trims, switches.
- Adjustable wheel height and angle for perfect fit, as well as left-handed support.
- Display switch allows programming setup without transmission.
- Permanent memory storage via EEPROM with no backup battery to service or have fail.

MODULE: 75PK-FM

- Module may be easily removed and a module on a different channel (or even band) reinserted to change the transmission frequency or band.
- Module transmits FM (**PPM**), HRS-FM (**HRS**) and **PCM**. No need for a second module.
- Module is protected under the RF module cover on the top of the radio.
- All transmission circuitry is included in the module, so no retuning is needed when changing channels or even bands.
- Frequency band is changed by inserting a module on the proper band, including for international use.
- ***In North America*** it is against FCC regulation to change the crystal within the transmitter module to a different channel. All such transmitter crystal changes must be performed by a certified radio technician. Failure to properly tune a system to its new channel may result in decreased range and may also result in interference to other types of frequency users on adjoining channels.
- The FSS synthesized module for the 9Z family of radios is ***NOT*** compatible with the 3PK.
- **DISP** displays instead of **RF** when main power is on and module is not installed.
- It is normal for the module to get slightly warm during use.
- Non-Futaba brand modules are not FCC certified for use with this radio and therefore are against FCC regulation to use.
- Do not use other modules in the 3PK or the PK module in other radios.
- Do not operate transmitter with module in and power switch on, while antenna is collapsed. Always extend antenna if transmitting.

RECEIVER: R203HF or R113iP

- The receiver included with your system is a high-sensitivity narrow-band single-conversion receiver.
- Any Futaba narrow band PPM(FM) receiver (all produced after 1991) on the correct band and frequency may be used.
- Any Futaba PCM 1024 receiver on the right band and frequency may be used. (all 1024 receivers say PCM1024; receivers which say PCM but not 1024 are 512 resolution and not compatible).
- Any Futaba HRS-FM receiver on the right band and frequency may be used. At the time of this writing, only the R203HF is available. **HRS receivers require 6.0V batteries and digital servos, including for throttle.**
- ***In North America*** the receiver included with this system may have its frequency changed by simply changing the crystal, as long as it remains in the same band. You may change anywhere from channel 61 through 90 in the 75MHz band or A1 through A6 in the 27MHz band without requiring retuning.

⊘ **NEVER** attempt to change a receiver's **band** by simply changing crystal (IE removing a 27MHz crystal and inserting a 75MHz crystal). A receiver that has a crystal installed from a different frequency band without retuning will NOT receive properly and will have dramatically decreased range if it responds at all.

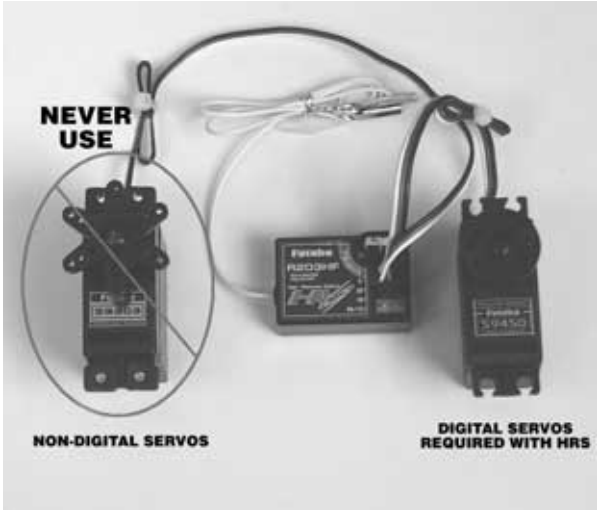

SERVOS:

- All Futaba PPM(FM) and PCM1024 receivers are compatible with all J-plug Futaba servos, including retract, winch, standard and digital servos.

⊘ **NEVER** use non-digital servos with HRS receivers. Severe damage to all electronics may result, including the possibility of a fire. Only digital servos may be used with HRS receivers, including for throttle.

GETTING TO KNOW THE TRANSMITTER

Display switch

- If the display switch is turned on without turning on the power switch, programming is possible without emitting radio waves.

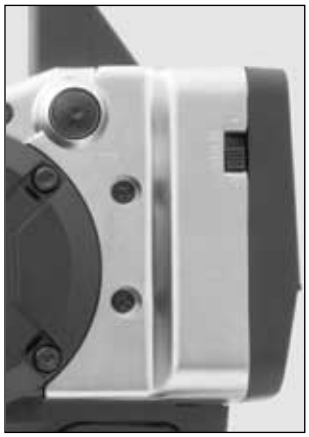

❗ If power switch is turned on while display switch is on, transmitter will transmit, which will interfere with other users operating on the same frequency. Always be sure you have control of your frequency prior to turning on the primary power switch.

- LCD screen contrast can be adjusted (See **SYSTEM**, p. 13.)
- LCD may be difficult to read due to temperature change when exposed to direct sunlight for more than a few minutes at a time, extreme heat, cold, or humidity.
- Always use only the display switch unless you want to transmit to your receiver and you have control of the frequency.
- Transmitting with the antenna collapsed may damage the module.

Power switch turned on: Beep confirmation sound is generated and the initial screen shown below appears.

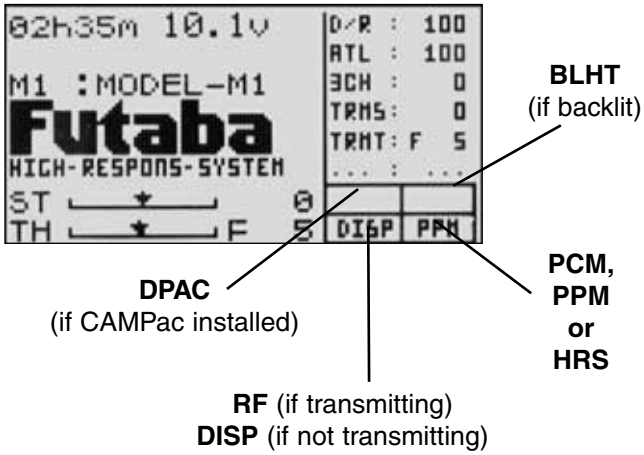

- Total timer display (H:M) (see **TIMER** p. 30) and battery voltage display
- Model name (10 characters) Futaba name can be changed to display servo view or timers. (See **SYSTEM**, p. 13.)
- Steering trim display
- Throttle trim display
- Function names and rate assigned to dials/trims DL1-DL3 and DT1-DT3 respectively.
- CAMPac, transmission, backlight and modulation status.

User name display: When the **END** button is held down for 1 second or longer at the initial screen, the Futaba logo and user name are displayed for about 2 seconds.

Digital trim operation

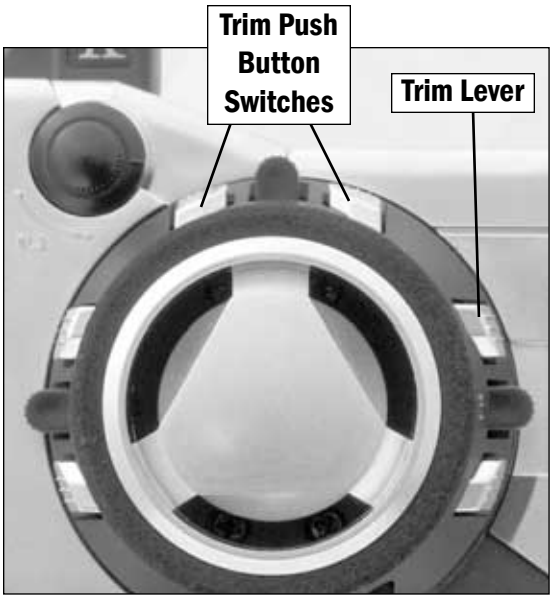

- Default assignments may be changed in **FUNC-DIAL** (pp. 34-35). Features assigned to DL1, 2, 3, and DT1, 2, 3 are displayed at all times on right side of LCD screen.
- Digital trims can be used in 2 ways:
  - Operating by the lever: Push the lever to the left or right (up or down).
  - Operating by push button switch: Press the push button switch in the desired direction.
- The current position is displayed on the LCD screen in the bottom three rows of the list.
- Each step is indicated by a tone.
- When the trim exceeds the maximum trim adjustment range, the beep will change and the servo will not move any farther. Return to the neutral position (center) by pressing both the push button switches simultaneously for about one second.
- Trim lever adjustments have no effect on the maximum servo travel. This prevents the linkages from binding when adjustments are made.

Digital grip dial operation

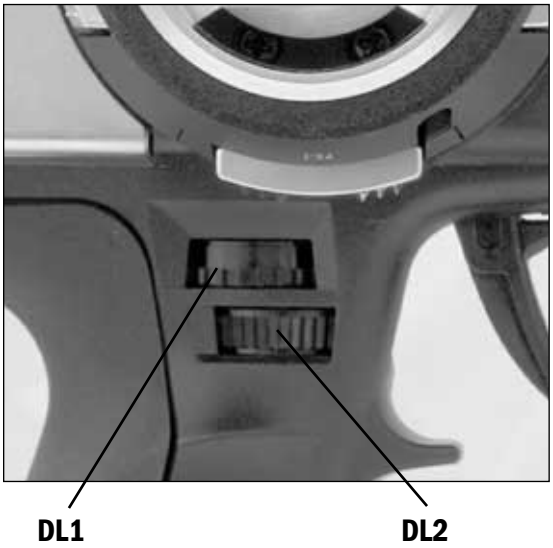

- Default assignments may be changed in **FUNC-DIAL** (pp. 34-35). Features assigned to DL1, 2, 3, and DT1, 2, 3 are displayed at all times on right side of LCD screen.
- Initial settings: DL1=Steering Dual Rate, DL2=ATL
- Operate the dials by turning them. The current set value is displayed on the LCD screen.
- A beep is made at each step.
- When the maximum position is reached at each side, the length of the beep changes. Thereafter, the set value does not change.
- Remember, the dials are digital so the position of each dial is remembered for each model separately.

Transmitter Checks Prior to Each Use

1. Turn on transmitter power.
2. Check the display screen for model name/number to ensure you are working with the correct model.
3. Check the display screen for “RF”.
   a. If RF is not displayed, check crystal/module installation. Be sure module is clipped firmly into transmitter.
   b. If RF is intermittent or non-existent, send for service immediately.
4. Check the display screen for proper modulation to match the receiver in this model.
   a. FM receivers, such as R123F, must be set to PPM.
   b. PCM1024 receivers, such as R113iP, must be set to PCM.
   c. HRS-FM receivers, such as the R203HF, must be set to HRS.
5. Confirm function assignment. Notice the 6 features listed in the box on the right of the screen, which shows you the features assigned to the digital dials and digital trims respectively, and their current settings.
6. Check trim, dual rate and ATL operation/positioning.
   a. Steering trim is defaulted to the DT1 trim lever above the steering wheel. Operate the lever and make sure the marker moves on the ST graph. If default has been changed, test steering trim in its new location.
   b. Repeat test for throttle trim, defaulted to DT2.
   c. Repeat test for steering dual rate, defaulted to DL1, at the grip of the transmitter.
   d. Repeat test for ATL, defaulted to DL2, below DL1.

INSTALLATION

Receiver and Servo Connections

When connecting and installing the receiver and servos, read all safety precautions in the appendix.

Installation When an ESC is used (MC800C)

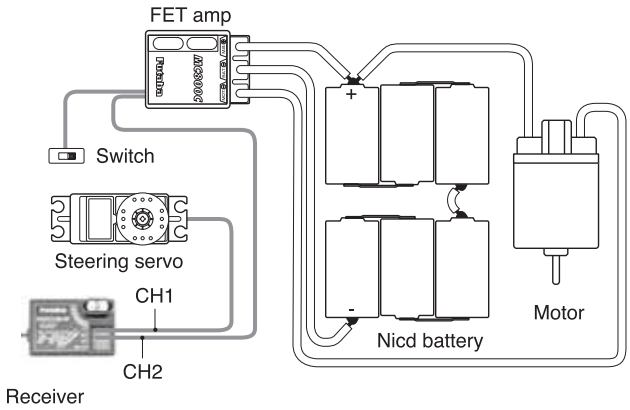

Installation For Gas Powered Models

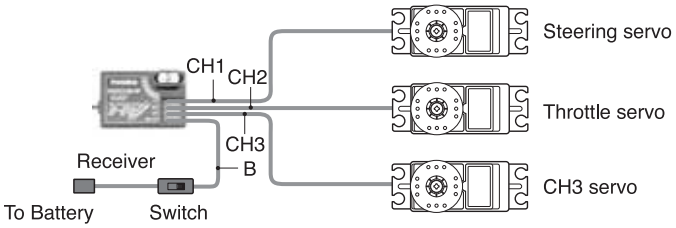

B/C port is for the receiver battery or a DSC cord. For information on DSC cord, see p 5.

Receiver Notes

DO NOT cut or fold the receiver antenna wire back on itself — cutting or folding changes the electrical length of the antenna and may reduce range. Secure the antenna as instructed in your model's manual. You may run the antenna inside of a *non-metallic* housing within the model, but range may suffer if the antenna is located near metal or carbon fiber parts. Be sure to perform a range check before using.

When you insert Futaba servos, ESC, switch or battery connectors into the receiver, note that each plastic housing has an alignment tab. Be sure the alignment tab is oriented properly before inserting the connector. To remove a connector from the receiver, pull on the connector housing rather than the wires.

If your servos are too far away to plug into the receiver, use an extension cord to extend the length of the servo lead. Additional Futaba extension cords of varying lengths are available from your hobby dealer. Always use an extension of the proper length. Avoid plugging multiple extensions together to attain your desired length. If distance is greater than 18” or multiple or high current draw servos are being used, Futaba Heavy-Duty servo extensions are recommended.

Receiver Vibration and Waterproofing

The receiver contains precision electronic parts. Be sure to avoid vibration, shock, and temperature extremes. **For protection, wrapping the receiver in foam rubber or other vibration-absorbing materials is ideal. Mounting with double-sided tape is the next best option:** It is also a good idea to waterproof the receiver by placing it in a plastic bag and securing the open end of the bag with a rubber band. If you accidentally get moisture or fuel inside the receiver, you may experience intermittent operation or a crash. If in doubt, send the receiver for service.

Using the 3PK's Functions:
The 3PK offers not only the most comprehensive menu of features available to provide optimum performance, but also quick-access to utilize your favorite features. 3PK offers "Menu Selection" for onscreen lists of available features, and a specialized, fully customizable version of "hot keys" called "Direct Selection." (Don't worry if terms seem overwhelming. Check the glossary and read on to get more familiar with new terms.)

Menu Selection

- Each function is easily selected from the function menu displayed on the LCD screen with the select key.
- Three sets of function menus are available to match the level of use. To select the level for each model, use the Level Select function (page 12). Note that functions are in different locations depending on the level selected. This is done to keep level 1 simple, and keep related functions together on the higher levels.

```
MENU 1

*CH-REV      *MOD-MODE
*SUB-TRIM    *FAIL-SAFE
*CH-EPA      *MDL-NAME
*ST-EXP      *MDL-RES
*TH-EXP      *LEVEL-SEL
*MDL-SEL     *SYSTEM
```

- Level 1 (**LV1**): For the new user, basic functions only.

```
MENU 1

*CH-EPA      *TH-ACCEL
*ST-EXP      *AT-START
*ST-SPEED    *IDLE-UP
*TH-EXP      *SUB-TRIM
*TH-SPEED    *TIMER
*A.B.S       *LAP-LIST
```

```
MENU 2

*MDL-SEL     *MOD-MODE
*MDL-RES     *FAIL-SAFE
*MDL-COPY    *DIRC-CALL
*MDL-NAME    *CH-REV
*FUNC-DIAL   *LEVEL-SEL
*FUNC-SW     *SYSTEM
```

- Level 2 (**LV2**): Race-ready, including most popular racing setup features.

```
MENU 1

*CH-EPA      *TH-ACCEL
*ST-EXP      *AT-START
*ST-SPEED    *BRAKE-MIX
*TH-EXP      *IDLE-UP
*TH-SPEED    *TIMER
*A.B.S       *LAP-LIST
```

```
MENU 2

*PRG-MIX1    *MDL-SEL
*PRG-MIX2    *MDL-RES
*BOAT-MODE   *MDL-COPY
*SUB-TRIM    *MDL-NAME
*CH-REV      *FUNC-DIAL
*FAIL-SAFE   *FUNC-SW
```

```
MENU 3

*ST-D/R      *SYSTEM
*TH-ATL      *DIRC-CALL
*CH3-POSI    *SERVO
*MOD-MODE    *MC-SETUP
*LEVEL-SEL   *ADJUSTER
```

- Level 3 (**LV3**): All functions can be selected. (For expert driver)

Direct Selection

- The Direct Selection screen allows quick access to 6 user-selectable functions with just 2 keystrokes:
  - Press the DIR key to open the Direct Selection Screen.
  - Press the button which corresponds to the feature's number as shown on the on-screen diagram of the keys to open that feature.

```
DIRECT SEL

1:TH-EXP
2:ST-EXP
3:CH-EPA
4:SUB-TRIM
5:MDL-SEL
6:MDL-NAME
```

Initial Settings

DIR	to Open
END	Throttle Exponential
UP	Steering Exponential
SEL	End Point Adjustment (EPA)
DN	Sub-trim
+	Model Select
−	Model Name
DIR	to Close

- Direct Selection choices can be edited using the **DIRC-CALL** function (see p. 36).

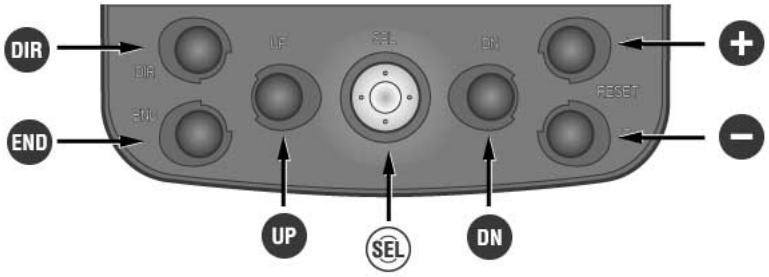

A Look at the Radio's Functions, Step by Step

LV1 FUNCTIONS for the New 3PK User and the Racers and Experts Alike

Level Selection LEVEL-SEL — Levels LV1, LV2, LV3

DEFINITION: Selects the complexity of functions displayed on the menu screens. Includes 3 levels of flexibility to simplify programming for new users and the most flexible system in the world to those who wish to use it.

AVAILABLE FOR EACH INDIVIDUAL MODEL:

- Selection of a lower level simply hides the higher level features from the menu; however, setups in the higher level menus remain intact and as set prior to changing the level.
- Model reset clears all functions including those not visible in the displayed menus.

ADJUSTABILITY:

- Level 1 (Learning the system; quick setups, a single menu with enough features for most models.) **LV1**
- Level 2 (Expands upon Level 1 menu, with many race-ready features.) **LV2**
- Level 3 (For the Expert driver, boat modeler, or other complex setups.) **LV3**
  - ***To view features available on each menu, see page 11.***

DEFAULT: **LV3**

INTERACTION: NONE. Changing the complexity of what menu is visible has no effect on the programming whatsoever. To adjust features set in a higher level and not currently visible, simply change the level back to the higher level and edit.

DESIRED END RESULT: Provide only as much information/access as needed without overwhelming the user with features not currently desired.

⚠ ***CAUTION:*** Just because you change to a lesser level does NOT reset hidden functions to their defaults or to inhibited. Be sure to inhibit any undesired functions and check settings which interact with other functions. (Example: throttle ATL.)

GOAL:	STEPS:	INPUTS:
Change setting from the default of Expert Driver (**LV3**) to New User (**LV1**) to simplify getting to know the basics of the radio. (If on **LV1** or **LV2**, scroll through menus, then select **LEVEL-SEL**.)	Open menu and display menu 3.	UP
	Select menu 3 & then select level selection.	SEL DN DN DN DN to **LEVEL-SEL**. SEL
	Select level 1.	DN
	Confirm your change.	⊕⊖ together for 1 second. Screen displays **LEVEL = LV1**
	Close.	END END END
Where next?	Name the model (**MDL-NAME**): See p. 15. Select modulation (FM/PCM/HRS) (**MOD-MODE**): See p. 16. Channel reversing (**CH-REV**): See p. 18. End point adjustment (ATV) (**EPA**): See p. 18.	

DEFINITIONS:

- **SYSTEM** — Adjusts system-wide settings. Settings are **not** model specific.
- **LHT-MODE** — LCD backlighting mode
- **LHT-TIME** — LCD backlighting time period
- **CONTRAST** — LCD screen contrast
- **BUZ-TONE** — Buzzer tone
- **LED-MODE** — LED pilot lamp
- **DISPL-SEL** — Home screen display settings
- **KEY-ON** — Back-lights whenever a programming key is pressed. Length of time is adjustable with **LHT-TIME**.
- **ACT** — Activated.
- **SRV-VIEW** — Servo display shown on home screen.

AVAILABLE FOR: System-wide only. Not channel or model specific.

ADJUSTABILITY:

- LCD backlight: **OFF**, **KEY-ON**, **ON** (constantly).
- Backlight time period: **OFF**, **ACT** (when **KEY-ON** is selected in **LHT-MODE**).
  - 1-30 seconds, length of time can be adjusted for backlight to stay on when a button (key) is pressed.
- Screen contrast: **-10** to **+10**.
- Buzzer tone adjustment: **OFF**, **0-100**.
- Pilot lamp color: **OFF**, **LIGHT BLUE**, **PURPLE**, **WHITE**, **GREEN**, **ORANGE**, **YELLOW**, **BLUE**.
- Home screen display: **FUTABA**, **SRV-VIEW**, **TIMER**.

INTERACTION:

- When **LHT-MODE** is set to **KEY-ON**, backlight comes on automatically if any programming button is pressed, and time period is automatically made **ACT** (active).
- Pilot lamp blinks when key functions, such as ABS and speed limiter, are active.

DESIRED END RESULT: Custom setup to best meet user's needs and style.

⚠ ***CAUTION:*** Adjusting display so dark/bright that it cannot be read and then turning transmitter off may require factory service to reset.

GOAL:	STEPS:	INPUTS:
Change the home screen display from Futaba to timer while radio is in **LV1** setting. (If set to more complex menus, scroll through menus with Up button until **SYSTEM** is displayed on screen.)	Open and select menu 1.	UP SEL
	Select **SYSTEM.**	UP to **SYSTEM**. SEL
	Select **DISP-SEL.**	UP
	Change to **TIMER.**	+
	Close.	END END END
Where next?	Adjust backlight settings (repeat steps above but edit **LHT**.) Adjust screen contrast (repeat steps above but adjust **CONTRAST**.) Set up timer function (**TIMER**): See p. 30. Reset system timer (from home screen + - for 1 second.)	

DEFINITION: Selects from the 10 model memories stored within the transmitter, or additional model memories in the optional **CAM**Pac ©.

AVAILABLE FOR:
- 10 models in transmitter memory
- Optional additional memories, 10 per **CAM**Pac © (see p. 5).

ADJUSTABILITY:
- Models M1-M10 within the transmitter, E11-E20 from optional **CAM**Pac ©
- Stores complete model setups with all functions separate per model (except settings within **SYSTEM**).

INTERACTIONS:
- Each model memory is a completely separate setup, and allows adjustment of all functions within each separate model memory (except **SYSTEM** functions).
- Each model memory may be set to a different modulation. If a model memory of a different modulation is selected, the transmitter must be turned off and back on to change the modulation.
  - Example: Model 1 is HRS with R203HF receiver. Model 2 is FM with R133F receiver. Select model 2 and close the menu. Note that HRS is still displayed on screen. Turn transmitter off and back on. Modulation now shows PPM and will communicate with the R133F or other FM receiver. (If you do not cycle the power on the transmitter, it cannot communicate with the PPM receiver. See **MOD-MODE**, p. 16.)
- Each separate model memory may have a different level selection, so that simple models have only **LV1** menu, with **LV2** and **LV3** for other, more complex models.
- To make a copy of one model memory for setting up another, similar model, or for experimentation, change **LEVEL-SEL** to **LV2** (p. 12), and use **MDL-COPY** (p. 33).

DESIRED END RESULT: Select a specific model's setup within the radio or **CAM**Pac data storage.

⚠ ***CAUTIONS:***
- Never remove the **CAM**Pac © with the power switch on.
- If a **CAM**Pac-stored model (E11-20) is in use when the transmitter is turned off, and then the **CAM**Pac is removed, "**SELECT ERROR**" will be displayed on screen and model M1 will be automatically selected. Use model select to select the desired model.
- The transmitter does not recognize one **CAM**Pac as being different from another. Model E11 is the first model in the **CAM**Pac currently in the port, regardless of what **CAM**Pac was last in the port. (Imagine inserting a floppy disk into your PC with a file on it labeled car1.doc. Close the file, remove the floppy, and insert another floppy which also includes a file called car1.doc. Your PC doesn't know or care that they may be different files; it simply opens the file named car1.doc.)

GOAL:	STEPS:	INPUTS:
Select model M3, changing from model M1 and using the **LV1** programming menus. (If set to more complex menus, scroll through menus with Up button until **MDL-SEL** is displayed on screen.)	Open and Select Menu 1.	UP SEL
	Select **MDL-SEL**.	DN DN DN DN DN SEL
	Choose **M3.**	DN DN to **M3.**
	Confirm your change.	⊕⊖ together for 1 second.
	Close.	END END END
Where next?	Change menu to **LV1** (**LEVEL-SEL**): See p. 12. Name the model (**MDL-NAME**): See p. 15. Copy the model (**MDL-COPY**): See p. 33. Reset the model data (**MDL-RES**): See p. 32. Select modulation (FM/PCM/HRS) (**MOD-MODE**): See p. 16. (Hint: remember to power off and back on to begin transmitting in new modulation.)	

DEFINITION: Provides a 10-character name for each of the model memories in the transmitter to easily select the correct setup for the model currently in use. Also provides a 10-character user name that is constant to all model memories.

AVAILABLE FOR: M1-M10 in transmitter memory, E11-E20 if using optional **CAM**Pac.
ADJUSTABILITY: Includes 0-9, A-Z and numerous symbols.
INTERACTIONS: Model name is reset to factory default with model reset, and copied with model copy.

DESIRED END RESULT:
- Clearly label each model for easy selection.
- User name can be set to display on home screen (see **SYSTEM**, p. 13) for easy confirmation of radio ownership.

⚠ ***CAUTIONS:***
- User name is constant across all model memories, so changing it changes it system-wide.
- Model names may be the same between models; model # will still be displayed and will still be different.

GOAL:	STEPS:	INPUTS:
Rename the current model FUTABA-1, while using the **LV1** programming menus. (If set to more complex menus, scroll through menus with Up button until **MDL-NAME** is displayed on screen.)	Open and select menu 1.	UP SEL
	Select **MDL-NAME**.	UP UP UP UP SEL
	Change first character to F.	− 7 times to **F.**
	Move to the second letter.	DN
	Repeat steps above to change name.	+ 6 times to **U**. DN + 16 times to **T**. DN Repeat.
	Close.	END END END
Where next?	Adjust the user name (**USR-NAME**): repeat steps above, but DN past model name to user name and edit each character. Copy the model (**MDL-COPY**): See p. 33. Select modulation (FM/PCM/HRS) (**MOD-MODE**): See p. 16. (Hint: remember to power off and back on to begin transmitting in new modulation.) Channel reversing (**CH-REV**): See p. 18.	

DEFINITIONS:

- Modulation select: Chooses the modulation (language) used by the transmitter to give instructions to the receiver.
- PPM: Pulse Position Modulation, commonly called "FM". Transmitted via FM, not encoded.
- PCM: Pulse Code Modulation. Transmitted via FM, but encoded for increased noise resistance. Includes FailSafe programming. (See p. 17.)
- HRS: High Response System. Transmitted via FM at accelerated rate; includes FailSafe programming. (See p. 17.)
- FM: Type of transmission of data. (Similar to FM car radio.) Used for PPM, PCM and HRS.

AVAILABLE FOR: Each individual model memory separately.

ADJUSTABILITY:

- PPM (Pulse Position Modulation, commonly called "FM") for FM receivers such as R133F
- PCM (Pulse Code Modulation, 1,024 step resolution) for PCM receivers such as R113iP
- HRS (High Response System) for HRS receivers such as R203HF

INTERACTIONS:

- Modulation is set separately for each model. One model can be PCM and another HRS, and still another PPM(FM).
- Modulation is not reset when a Model Reset is performed.
- Modulation is stored for each specific model. Turn transmitter off/on if new model is in different modulation.
- Both transmitter switches MUST be turned off and back on for a change to take effect. If transmitter is not turned off after modulation is changed, it continues to transmit in the last modulation. Display shows the current method of transmission under **NOW OPERATION** and the modulation that will be used as soon as the transmitter is turned off and back on under **MEMORY**.

DESIRED END RESULT: Change transmitting "language" so the receiver can understand the transmitter's instructions.

⚠ ***CAUTIONS:***

- While there are 3 types of modulation (4 if you include AM, not supported by 3PK), all are transmitted on the same frequency band. NEVER attempt to operate more than one model on the same frequency at the same time.
- Transmitter must be turned off and back on for change to take effect.

GOAL:	STEPS:	INPUTS:
Change Modulation from HRS to PPM to operate with standard Futaba FM receivers such as R133F, while using model M1 and the **LV1** programming menus. (If set to more complex menus, scroll through menus with Up button until **MOD-MODE** displayed on screen.)	Open and select menu 1.	UP SEL
	Select **MOD-MODE**.	DN 6 times. SEL
	Choose **PPM.**	DN
	Confirm your change.	⊕⊖ together for 1 second.
	Close.	END END END
	Cycle transmitter power to transmit in new modulation.	Turn both switches off. Turn both switches back on. Confirm screen reads **PPM.**
Where next?	Name the model (**MDL-NAME**): See p. 15. Copy the model (**MDL-COPY**): See p. 33. Channel reversing (**CH-REV**): See p. 18. End point adjustment (**EPA**): See p. 18. Set up FailSafe reactions (**FAILSAFE**): See p. 17. Change menu complexity (**LEVEL-SEL**): See p. 12.	

DEFINITIONS:

- FAILSAFE: Settings stored by the receiver, used only if the receiver fails to receive clean, intelligible signal from a transmitter.
- HOLD: Maintain the last instruction provided by the transmitter before clean signal was lost.
- SET: Position servos are to be moved to if FailSafe activates.
- BATTERY F/S: When "on" the receiver will move the throttle servo to the preset FailSafe position when the receiver battery is low. Release and pull trigger to reactivate throttle for approximately 30 seconds.

AVAILABLE FOR Steering, Throttle, Channel 3, ***only with HRS/PCM receivers and HRS/PCM modulation settings*** (see **MOD-MODE**, p. 16).

ADJUSTABILITY: Hold or set (to go to a preset position).

INTERACTIONS:

- FailSafe operates only during interference or loss of transmitter signal.
- Modulation is not reset when a model reset is performed, but the FailSafe settings are reset.

DESIRED END RESULT:

- FailSafe: Provide receiver pre-recorded instructions of how to perform in the event it does not receive clean, clear transmission from a transmitter on its channel in Futaba PCM1024 language.
- Battery FailSafe: Warn user the receiver battery is getting so low that safe vehicle operation will soon end.

⚠ ***CAUTION:*** Settings are sent to the receiver every 2 minutes. Always allow at least 2 minutes' time to pass prior to testing any FailSafe settings.

GOAL:	STEPS:	INPUTS:
Change FailSafe settings for your throttle servo on your PCM receiver from "HOLD" to full brake position, while using the **LV1** programming menus. (If set to more complex menus, scroll through menus with Up button until **FAILSAFE** displayed on screen.)	Open and select menu 1.	UP SEL
	Select **FAIL-SAFE**.	UP 5 times. SEL
	Choose throttle channel.	DN
	Store desired throttle position.	Hold ***THROTTLE TRIGGER*** to full brake. ⊕⊖ together for 1 second.
	Close. Cycle transmitter power to test settings.	END END END ***Wait at least 2 minutes.*** Turn master power switch off. Observe response of throttle servo. It should go to full brake setting.
Where next?	Set battery FailSafe to obey stored FailSafe position in case of low receiver battery voltage (**BATTERY F/S**): Repeat steps above but change **MODE** to **ON**. Channel reversing (**CH-REV**): See p. 18. End point adjustment (**EPA**): See p. 18. Change menu complexity (**LEVEL-SEL**): See p. 12. Set steering exponential (**ST-EXPO**): See p. 20.	

Channel Reverse **CH-REV** — Levels **LV1, LV2, LV3**

DEFINITION: Reverses the direction the servo moves when given an input. If the vehicle is turning right when wheel is turned left (or vice versa), reverse the setting for the steering. If the engine accelerates when brake is pushed, reverse the setting for the throttle.

AVAILABLE FOR: Steering, throttle, channel 3
ADJUSTABILITY: Normal, reverse
INTERACTION: Servo reversing affects all other functions, including EPA.
DESIRED END RESULT: Change the servo's direction to exactly the opposite.

⚠ ***CAUTION:*** Servo reversing affects all functions, including ATL.

GOAL:	STEPS:	INPUTS:
When brake is applied, the engine accelerates. Reverse the throttle servo direction, while using the **LV1** programming menus. (If set to more complex menus, scroll through menus with Up button until **CH-REV** displayed on screen.)	Open and select menu 1.	UP SEL
	Select **CH-REV**.	SEL
	Choose throttle channel.	DN
	Reverse the servo.	−
	Close.	END END END
Where next?	End point adjustment (**EPA**): See p. 18. Change menu complexity (**LEVEL-SEL**): See p. 12. Set throttle exponential (**TH-EXPO**): See p. 20. Set engine cut and smooth start features (**AT-START**): see p. 28.	

End Point Adjustment **EPA** — Levels **LV1, LV2, LV3**

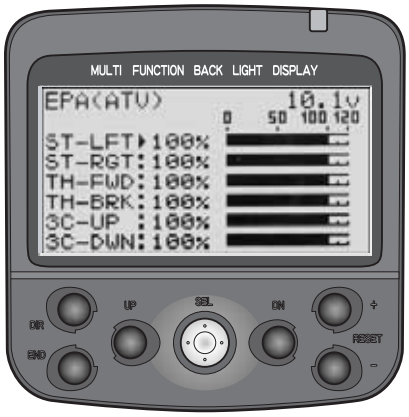

DEFINITION: End point, commonly called EPA or ATV, adjusts (shortens or lengthens) the total travel of the servo. For example, a steering servo travels 60° each way. Decreasing the right EPA to 50% results in a steering servo that will move 60° to the left but only 30° to the right.

AVAILABLE FOR: Steering, throttle, channel 3.

ADJUSTABILITY: 0-120% on all 3 channels. Default: 100%.

INTERACTIONS:

- EPA **is** a primary function. EPA's should be set prior to doing any other programming and not adjusted (except for servo replacement, etc.) once other programming has been set. If EPA is adjusted after features such as dual rates, ATL, mixing, etc, the other functions must be readjusted based upon the new EPA.
- EPA is **not** limiting or absolute. Other programming functions can override the end point set by EPA. Always double check for binding after adjusting:
  - Sub trim (all channels)
  - Program mixing slave side (all channels)
  - Tilt mixing (steering, channel 3)
  - Idle up (throttle)
  - Throttle preset (throttle)
  - ATL trim (set ATL trim dial center prior to adjusting throttle channel EPA.) (**LV3** only.)
- EPA is **not** tied to any mixing. EPA adjusts each individual servo regardless of brake mixing, boat mode mixing, etc. **NOTE:** When EPA is increased to maximum (120%) but more servo travel is needed, the servo's motion can be increased with programmable mixing, up to the servo's physical limits. (See programmable mixes, pp 40-41.)
- Interaction Example:
  - Original setup:
    - Steering servo linkage allows 30° of servo rotation to the left.
    - Steering EPA is adjusted to 90%, creating 27° of left travel.
    - Steering dual rate is adjusted to 50%, or 13.5° of travel.
  - Adjusting EPA to 120% results in 36° of left travel; dual rate now provides 18° of travel, not 13.5°.
- Steering dual rate adjusts the servo's total travel as if EPA was adjusted. ATL adjusts braking travel. Both can be assigned to dials (see FUNC-DIAL, pp. 34-35).

DESIRED END RESULT:

- All channels: Servo is not binding or chattering, trying to move the linkage farther than it is physically able.
- All channels: Servo moves the attached pushrod just enough, creating the desired maximum servo movement.
- All channels: Linkage does not stick, bind, or catch on anything on the vehicle.
- Steering: Full right and full left turns result in the desired turning radius.
- Channel 3: Function moves the desired distance when full up/down, left/right or pressed/unpressed button are applied.

⚠ ***CAUTIONS:***

- Servo binding drains receiver batteries very quickly and may result in a loss of control.
- More is NOT always better! Start with the desired steering throws recommended for your vehicle.
- Always check for binding and servo "chatter" prior to each use.
- Always set dual rates, sub trims, and all other functions to their defaults prior to adjusting EPA.

GOAL:	STEPS:	INPUTS:
Change end point for steering servo so servo arm does not strike chassis in right turns, while using the **LV1** programming menus. (If set to more complex menus, scroll through menus with Up button until **CH-EPA** displayed on screen.)	Open and select menu 1.	UP SEL
	Select **CH-EPA**.	DN DN SEL
	Go to steering channel right side setting.	DN
	Set desired end point (example 98%).	− to 98%.
	Close.	END END END
Where next?	Set sub-trim (**SUBTRIM**): See p. 22. Set exponential (**ST-EXP, TH-EXP**): See p. 20. Change menu complexity to access additional features (**LEVEL-SEL**): See p. 12. Set idle-up (**IDLE-UP**): See p. 27. Set anti-lock braking (**ABS**): See p. 24.	

DEFINITIONS:

- Exponential adjusts the sensitivity of the servo around the neutral position. Exponential creates a true curve, not a hard climb to a certain point then a softer climb from there. Negative exponential makes the servo less responsive around center; positive exponential makes the servo significantly more responsive around center. Only exponential is available for steering and braking.
- **TH-EXP** offers far more than just exponential for forward: it also offers a 5-point throttle "curve" and a Variable Trace Rate (VTR) option.
- VTR: Variable Trace Rate is basically a 3-point line, where one point may be raised or lowered, forming two straight lines, and where the user can select the point where the line breaks into two.
- The "curve" function offers 5 points along the range of the servo, and draws straight lines of response between each point. It is not a true curve, as is exponential, and there are noticeable steps in the responsiveness as each rate of response is entered.

Expo Curve

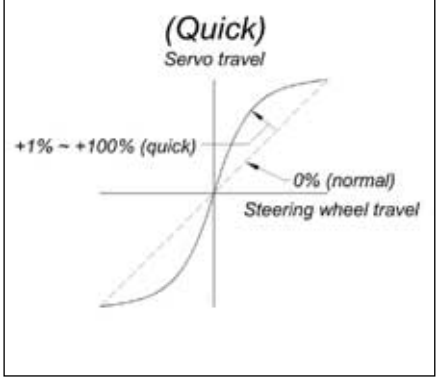

Expo Curve

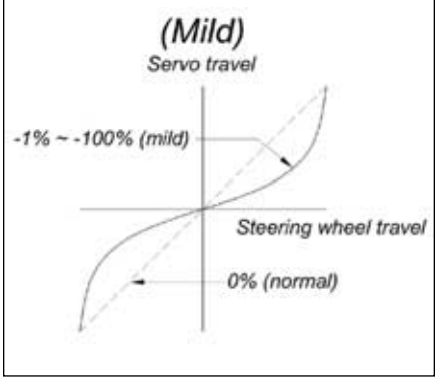

Throttle Curve (forward throttle only)

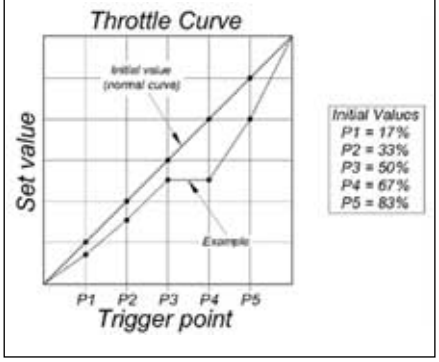

Variable Trace Rate (VTR) (forward throttle only)

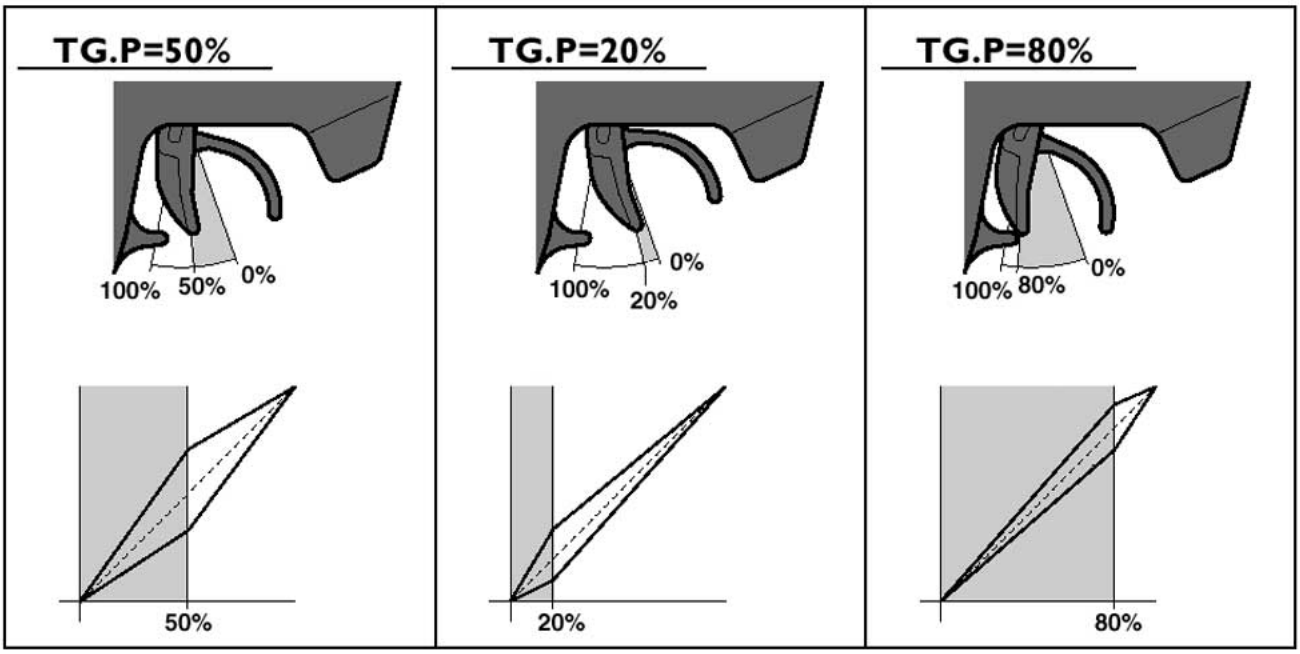

AVAILABLE FOR: Steering (**ST-EXP**), Throttle (**TH-EXP**)

ADJUSTABILITY:

- Range: -100% to +100%
- Throttle: Forward and Braking
- Steering: Left and right
- Types: (**TH-EXP** forward only) Variable trace, curve, or exponential curves.
- May be assigned to a dial for on-the-track adjustability. (See **FUNC-DIAL**, pp. 34-35.)

INTERACTIONS:

- Exponential affects the servo's response around center, and affects all built-in and programmable mixing functions such as throttle acceleration, brake mixing, ABS, etc. All mixing functions respond based upon the position the transmitter is telling the servo to go to, not the amount of trigger being pulled or wheel turned.
- EPA affects the total travel of the servo, and exponential is proportional to and affected by that total travel.
- **AT-START, TH-SPEED, TH-ACCEL** and other features interact with this function. For example, a very high VTR rate will result in rapid acceleration early in the trigger movement. Therefore, the engine reaches wide open at, for example, half throttle trigger. This may make it seem as though Speed Limiter programming is needed when you really should adjust the VTR rate to create a more normal throttle response.

DESIRED END RESULT:

- Positive exponential makes the servo move farther for the same amount of input when around neutral (for sharper steering when small inputs are given, for example).
- Negative exponential makes the servo move less for the same input when around neutral (to make a nitro engine's response to the throttle trigger smoother and more consistent between the first 1/4 of the trigger and the last 1/4 of the trigger.)

⚠ ***CAUTIONS:***

- Too much positive exponential can make the model so overly sensitive it may be impossible to control.
- Too much negative exponential can make the model so non-responsive, your inputs may be too little too late, resulting in a crash.
- Too high of a rate on a throttle VTR will result in the engine reaching full throttle well before the trigger is at full throttle, which may result in wheel spin, especially upon acceleration.

GOAL:	STEPS:	INPUTS:
Making the steering servo less responsive around center to get rid of oversteering when trying to make corrections at high speeds, while using the **LV1** programming menus. (If set to more complex menus, scroll through menus with Up button until **ST-EXP** displayed on screen.)	Open and select menu 1.	UP SEL
	Select **ST-EXP** (**TH-EXP** for throttle.)	DN DN DN SEL
	Add negative exponential until servo is in desired position.	− to –25%.
	Close.	END END END
Where next?	Create a throttle VTR with a rate of 0 and a trigger point of 50%. See how it is just a straight throttle response? Now hold the throttle at 1/2 trigger while adjusting the rate. See how increasing or decreasing the VTR will then cause the throttle servo to open sooner, or slower, on a smoothly linear response? Adjust braking expo for softer response around neutral. Repeat steps above in **TH-EXP**. Set FailSafe (**FAIL-SAFE**): See p. 17. Change menu complexity to access additional features (**LEVEL-SEL**): See p. 12. Set speed of response for steering/throttle (**ST-SPEED, TH-SPEED**): See p. 23. Set acceleration rate to avoid wheel spin (**AT-START**): See p. 28.	

DEFINITION: Fine tuning adjustment for the center point of each servo. Similar to using electronic trims on the radio, but subtrim moves the entire servo's travel rather than just sliding the servo left/right within the total travel. The setting is stored within the programming and the onscreen displays continue to show neutral.

AVAILABLE FOR: Steering, throttle, channel 3

ADJUSTABILITY:
- Steering: left 100 to right 100
- Throttle: brake 100 to throttle 100
- Channel 3: -100 to +100
- May be assigned to a dial/trim. (See **FUNC-DIAL**, pp. 34-35.)

INTERACTIONS:
- **ALWAYS** adjust your digital trims back to neutral prior to adjusting your subtrim. Then adjust the subtrim until the servo is at the desired location without needing any digital trim.
- Subtrim adjusts the entire range of the servo to one side or the other; it does NOT adjust the servo's center point toward one end of the total travel like digital trims.
- Subtrim affects the neutral point for the servo for all other functions.

DESIRED END RESULT: Fine-tune the servo's center point to correct for minor linkage problems.

⚠ ***CAUTION:*** The range of subtrim is limited. Always adjust linkages to get the servo's center as close to the desired location mechanically and only use trim functions as absolutely necessary.

GOAL:	STEPS:	INPUTS:
Moving the steering servo arm one tooth on the servo results in a slight right turn; moving it back one causes a slight left turn. Adjust the servo's center (example: 5) so that the vehicle travels perfectly straight with no steering input, while using the **LV1** programming menus. (If set to more complex menus, scroll through menus with Up button until **SUB-TRIM** displayed on screen.)	Open and select menu 1.	UP SEL
	Select **SUB-TRIM**.	DN SEL
	Cursor down to throttle and up to steering to see the cursor positioning.	DN UP
	Add trim until servo is in desired position.	− to L5.
	Close.	END END END
Where next?	Set end point (**EPA**): See p. 18. Set exponential (**ST-EXP, TH-EXP**): See p. 20. Change menu complexity to access additional features (**LEVEL-SEL**): See p. 12. Set idle-up (**IDLE-UP**): See p. 27. Set throttle acceleration (**TH-ACCEL**): See p. 26.	

DEFINITION: Speed Limiter decreases the maximum speed of the servo. This may be adjusted individually for turning and returning the servo to neutral (steering), and for high and low throttle settings.

A servo which responds too rapidly to a full-wheel input may cause the vehicle to oversteer; to compensate many drivers steer too slowly, resulting in understeer and not completing a clean corner. Others slow down to make the model more controllable, losing valuable seconds. Speed Limiter helps in both these cases.

Similarly, applying throttle too suddenly results in wheel spin and wasted energy. It may also cause a nitro engine to stall.

AVAILABLE FOR: Steering (**ST-SPEED**), Throttle (**TH-SPEED**)

ADJUSTABILITY:

- 1% (slowest possible response) to +100% (normal response)
- On input and return (**ST-SPEED** only); High speed and low speed (**TH-SPEED** only)
- On/off switch may be assigned for **TH-SPEED** only. Switch selection made in **FUNC-SW** (see pp. 34-35).
- Throttle speed and steering turn/return may each be assigned to a dial. See **FUNC-DIAL** (pp. 34-35).

INTERACTIONS/COMPARISONS:

- Increasing EPA decreases the rate at which a servo reaches a given point mechanically; therefore, adjusting EPA will also adjust the actual rate of response of that servo.
- Negative exponential softens how ***far*** the servo responds to a given input vs. how ***fast***. Either is used to settle a "twitchy vehicle", but the driver must first determine if the servo is moving too far, or simply too quickly.
- ABS pulsates the amount of brake given for a certain input to avoid overbraking and skidding the entire time brake is applied. Speed Limiter slows the brake command and decreases skidding only when brakes are first applied.
- Throttle acceleration gives a significant sudden movement of the throttle servo only when the trigger is first moved; Speed Limiter would slow that quick step off idle and diminish the effectiveness of acceleration. Thus, modifying Speed Limiter may require adjustments to acceleration, and vice versa.
- Auto-start moves/holds the servo to a preset position when the throttle is applied the first time, then allows the servo to operate through its normal travel for the rest of the run; Speed Limiter slows the performance of the throttle servo at all times. If the problem is spinning on starts only, then auto-start should be adjusted, NOT Speed Limiter.
- Idle-up increases the throttle idle as if throttle trim were applied, and is used to make starting nitro engines easier. Speed Limiter will only effect how rapidly the engine responds when additional throttle is applied.
- ATL adjusts the end point of the braking side only; Speed Limiter affects how quickly that total distance is traveled. Adjustments to either may require fine adjustments to the other.

DESIRED END RESULTS:

- Servo reaches actual travel commanded by trigger/wheel position, just at a more gradual rate.
- Minimize wheel spin, harsh acceleration out of corners, understeering and spins.

GOAL:	STEPS:	INPUTS:
Decrease throttle rate of response when applying more than 40% throttle, to minimize torque/spinning when accelerating out of turns, while using the **LV2** programming menus. (If set to **LV3**, select **TH-SPEED** from menu 1). (If set to **LV1**, first change level selection. See p. 12.)	Open and select menu 1.	DN SEL
	Select **TH-SPEED**. (use **ST-SPEED** to adjust steering servo speed.)	DN DN DN DN SEL
	Make active only above 40% trigger.	+ to **H40**.
	Decrease response speed to 50%.	DN − to **50%**.
	Activate the function.	DN +
	Close.	END END END
Where next?	Assign on/off for throttle speed (**FUNC-SW**): See pp. 34-35. Set ABS braking (**ABS**): See p. 24.	

DEFINITIONS:

- **ABS**: Simulates a full size car's antilock braking by pulsing the brake on and off rapidly.
- **ABP**: Amount of brake return, how far the braking response is decreased during the pulses.
- **DLY**: Delay; determines how long the braking is applied before ABS begins to operate.
- **CYC**: Cycle speed adjustment, sets how rapidly the brakes cycle from full brake to ABP and back.
- **TGP**: Trigger point, sets at what point ABS will be activated. ABS does not respond if less brake is provided than the trigger point setting.
- **DTY**: Cycle duty ratio, sets the proportion of the total cycle spent with brakes applied full vs. ABP.
- **STM**: Steering mix setup, controls when the ABS is triggered based upon amount of steering input. Designed to decrease skidding when vehicle is in a turn, and minimize spin outs.

AVAILABLE FOR: Braking only.

ADJUSTABILITY:

- **ABP**: 0 (no ABS) to 100% [Servo goes to neutral (no brake) during pulse].
- **DLY**: 0 (ABS responds immediately) to 100% (1.7 seconds of full brake before ABS takes over).
- **CYC**: 1 (fastest) to 30 (slowest). Default=10.
- **TGP**: 10-100.
- **DTY**: -3 (longest full brake application — most likely to skid) to + 3 (shortest full brake – least likely to skid).
- **STM**: OFF, N10-N100, E10-E100.
- **MODE**: Inhibited, Active but switch is off, Active and switch is on.
- Switch assignment can be changed in **FUNC-SW** (see pp. 34-35).
- Each ABS variable can be assigned to dials in **FUNC-DIAL** (pp. 34-35) for on-the-course adjustability.

INTERACTIONS:

- EPA, servo reversing, dual rates, Speed Limiter, acceleration, auto-start, and exponential all interact to create the overall braking effect.
- Brake mixing works with ABS as if only one brake servo were used. No second setup for ABS is required.
- Trigger point, steering mix and assigned switch each control ABS. All three must "say OK" for ABS to respond.

DESIRED END RESULT: Model stops as rapidly as possible without skidding.

⚠ ***CAUTIONS:***

- Careful analysis of the problem causing skids is required to adjust the proper portion of ABS for best results.
- Adjustments to EPA, auto-start, expo, speed, brake mixing, vehicle's suspension, tire compounds, engine tuning and ATL will all affect the performance of the ABS settings.

GOAL:	STEPS:	INPUTS:
Set up a fairly rapid servo (such as S9402) on a nitro off-road vehicle, while using **LV2**. (If using **LV3**, select **ABS** from menu 1.) (If using **LV1**, first change level selection. See p. 12.) **Desired settings:** Fairly mild return (**ABP**) 30% Use ABS if brakes are applied for more than approx. 1/4 second (**DLY**): 10% Pulse quickly (**CYCL**): 5-7 Use ABS only if braking hard: **TGP**: 70% Leave proportion of brake on to brake off even (**DUTY**): 0 Leave steering mix off (**STM**): 0 View onscreen demonstration of braking and make adjustments as needed.	Open and select menu 1.	DN SEL
	Select **ABS**.	DN DN DN DN DN SEL
	Make ABS active.	DN DN DN +
	Set rate of return to 30% (**ABP**).	UP UP UP − to **30**.
	Delay ABS coming on to 10% of the maximum available delay (**DLY**).	DN + to **10.**
	Decrease the cycle value to increase the cycle rate (**CYCL**).	DN − to **5**.
	Set the trigger position where ABS becomes effective to 70% (**TGP**).	DN DN + to **70**.
	Leave the difference in brake-on to brake-off in each cycle to 0 (**DUTY**).	DN (Leave at **0**.)
	Allow ABS to work whether vehicle is turning or not (**STM**).	DN (Leave at **OFF**.)
	View ABS working within the function on screen to confirm proper setup. (***Hint***: **LV3** users can also view braking activity and all other servo actions on screen using the **SERVO** function.)	Gradually push the throttle trigger to approximately half brake. Screen should still read "**MODE: ACT (OFF)**". Push past 70%. Display now reads "**MODE: ACT (ON)**" and you can see how brake commands will be transmitted to the servo right on the screen.
	Close function and menus.	END END END
Fine tuning:	If brakes still lock during all stops, analyze the problem, then try: Increasing **ABP** so less brake is applied during pulses. Decreasing **DLY** so that ABS takes effect more rapidly. Increasing **CYC** so the brakes pulse more rapidly, each on/off cycle is shorter. Decrease the **TGP** so ABS takes over with less brake application. Decreasing **DTY** so that brake off time is longer than brake on. If brakes lock in turns but are not enough on straights: Set **STM** so ABS functions only when turning (ex: **E50**).	
Where next:	*NOTE: All of these functions interact with the throttle servo as well and are all inter-related. Adjusting any one may affect the performance of the others, as described in Interactions for each function.* Adjust the throttle servo's overall speed (**TH-SPEED**): See p. 23. Adjust throttle exponential (**TH-EXP**): See p. 20. Adjust throttle servo's response only immediately around neutral to correct for nitro engine's lag due to linkage setup (**TH-ACCEL**): See p. 26. Set up smooth acceleration off of the start or engine cut (**AT-START**): See p. 28. Set up a high idle for starting/racing, and keep a normal idle to keep the car sitting still on start line (**IDLE-UP**): See p. 27. Adjust brake mixing for separate front/rear brakes (**BRAKE-MIX**) (**LV3**): See p. 42.	

DEFINITION: Due to the shape of some nitro engine linkages, throttle servo movement near neutral results in very little movement of the pushrod. Throttle acceleration simply jumps the servo from neutral to a portion of the total available throw whenever the trigger is moved away from center. It does NOT change the speed of the servo; the servo will jump to the input position at its maximum possible speed. Unlike exponential, which adjusts the whole throttle movement into a curve, throttle acceleration simply "jumps" away from neutral and then leaves the remaining response linear. Accelerate is a pre-programmed VTR throttle exponential (see p. 20).

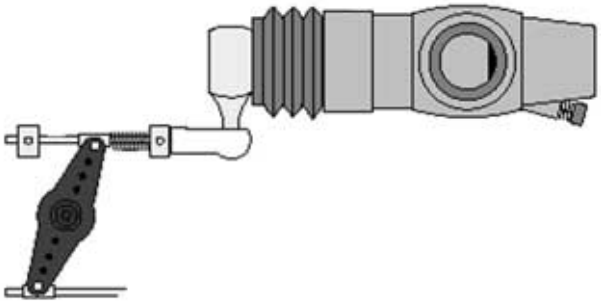

AVAILABLE FOR: Throttle and braking separately.

ADJUSTABILITY: 0-100%.

- At 100% the throttle servo moves immediately to approximately 40% of the total EPA.
- At 100% the brake servo moves immediately to full brake.
- Each setting may be assigned to a dial or trim for on-the-track adjustability. (See **FUNC-DIAL**, pp. 34-35.)

INTERACTIONS:

- EPA will affect how far the servo moves in the jump. Changes in EPA may require adjusting throttle acceleration.
- Brake mixing works with acceleration as if only one brake servo were used. No second setup is required.

DESIRED END RESULT: Model responds to throttle/brake immediately, similar to an electric car.

⚠ ***CAUTION:*** High brake settings will result in locked brakes. Adjust throttle acceleration only enough to pick up the slack in the linkage; then, utilize ABS to fine tune braking performance.

GOAL:	STEPS:	INPUTS:
Remove throttle and braking "lag" due to linkage in a 4WD nitro powered car, while using **LV2**. (If using **LV3**, select **TH-ACCEL** from Menu 1.) (If using **LV1**, first change the level selection. See p. 12.)	Open and select menu 1.	DN SEL
	Select **TH-ACCEL**.	UP 6 times SEL
	With receiver on, adjust forward until the linkage opens the carb with the slightest throttle input.	DN DN + as needed.
	With receiver on, adjust brake until the linkage applies brake with the slightest brake input.	DN + as needed.
	Close function and menu.	END END END
Where next:	*NOTE: All of these functions interact with the throttle servo as well and are all inter-related. Adjusting any one will affect the performance of the others.* Adjust the throttle servo's overall speed (**TH-SPEED**): See p. 23. Adjust throttle exponential (**TH-EXP**): See p. 20. Setup ABS braking (**ABS**): See p. 24. Set up smooth acceleration off of the start or engine cut (**AT-START**): See p. 28. Set up a high idle for starting/racing, and keep a normal idle to keep the car sitting still on start line (**IDLE-UP**): See p. 27. Adjust brake mixing for separate front/rear brakes (**BRAKE-MIX**) (**LV3**): See p. 42.	

DEFINITION: Adjusts the throttle's idle/neutral point, usually used to create a raised idle, making it easier to start the engine. May adjust either toward higher idle (U) or toward braking (D).

AVAILABLE FOR: Throttle only.

ADJUSTABILITY:
- D50-1, 0, U1-50%. D = brake side. U = throttle side.
- Rate may be assigned to a dial or trim for on-the-track adjustability (see FUNC-DIAL, pp. 34-35).

INTERACTION:
- Requires switch assignment in the **FUNC-SW** screen (see pp. 34-35).
- EPA does ***NOT*** affect the preset position of idle-up.
- Idle-up could actually exceed your total EPA. Idle-up obeys only the actual total servo travel and servo reversing, and no other programmed changes.

DESIRED END RESULT: Throttle servo moves to a preset position when button is pushed and throttle trigger is at idle. Has no effect at other throttle positions.

⚠ ***CAUTION:*** If you have to adjust your EPAs after setting up this function, be sure to double check that the pre-set travel is still what is desired.

GOAL:	STEPS:	INPUTS:
Set a high idle of 25% of servo travel to get engine to start easily even when warm from racing, while using **LV2** programming (If **LV3**, select **IDLE-UP** from menu 1). (If using **LV1**, first change the level selection to **LV2**. See p. 12.)	Set desired switch (**FUNC-SW**).	See **FUNC-SW** (pp. 34-35).
	Open and select menu 1.	UP UP SEL
	Select **IDLE-UP**.	UP UP UP UP SEL
	Set desired rate to up (increase) 50%.	+ to **U 50%**.
	Test function on screen.	Press selected switch (ex: PS-1). Note screen now reads "**ON**" and LED blinks. Release switch.
	Close function and menu.	END END END
Where Next:	*NOTE: All of these functions interact with the throttle servo as well and are all inter-related. Adjusting any one will affect the performance of the others.* Adjust throttle EPA (**EPA**): See p. 18. Adjust the throttle servo's overall speed (**TH-SPEED**): See p. 23. Adjust throttle exponential (**TH-EXP**): See p. 20. Setup ABS braking (**ABS**): See p. 24. Set up smooth acceleration off of the start or engine cut (**AT-START**): See p. 28. Adjust brake mixing for separate front/rear brakes (**BRAKE-MIX**) (**LV3**): See p. 42.	

DEFINITIONS:

- ***Auto-start***: A pre-set throttle position, less than full throttle, to be used for the initial acceleration off the line without having wheel spin. When the trigger is released, auto-start is turned off and throttle operates normally again.
  - **ATS:** Auto-start status.
- ***Engine Cut***: Shuts the engine off without having to adjust the throttle trim. Takes the throttle servo to a preset position when the switch is pressed. (Not available to models using braking/reverse from the throttle servo. Primarily for boats.)
- **TG.P**: Trigger point at which auto-start is activated.
- **PRST**: Preset throttle servo position when function is activated. Preset is a "true" preset – it is not a mix or a portion of the EPA. It is truly a command to move the servo to a set position regardless of other inputs, including trigger.
- **MODE**: Which function is being utilized at this time. (Engine cut and auto-start can not be used together).
  - **AT&SW**: Auto-start is activated by throttle trigger or switch. Switch can be assigned in **FUNC-SW** (pp. 34-35) and used to turn on/off the auto-start feature without having to pull or release the throttle trigger to do so.
  - **INH**: Inhibited. Function is electronically inhibited and will not operate until changed to another setting.
  - **SW**: Switch operated. Auto-start is inhibited and engine cut is available. (Assigned in **FUNC-SW**, pp. 34-35.)

AVAILABLE FOR: Throttle servo only.

ADJUSTABILITY:

- **MODE:** Inhibited, switch only (engine cut), auto-start with switch override (autostart).
- **ATS**: Inhibited, off (not available until set), ready (will activate on next trigger pull), active (operating now).
- **TGP**: Inhibited, 5-95. Default: 5.
- **PRST**: Brake 100-1, 0, Forward 0-100. Default: 0.
- Auto-start may be assigned to a switch. Engine cut must be assigned to a switch to operate. (See **FUNC-SW**, pp. 34-35.)

INTERACTIONS:

- EPA has ***NO*** effect on the preset position. The preset position may exceed EPA. Be sure to set auto-start after setting EPA.
- Servo reversing ***DOES*** change the direction of the preset in this function.
- No other function affects the preset except servo reversing.
- Trigger position has no effect on engine cut. Engine cut will shut engine to the preset position regardless.
- Auto-start must be restarted for each use by going to the auto-start function and pressing the + and – keys together for one second while ATS is selected, or assigning and holding on a switch. (See **FUNC-SW**, p. 34-35.)
- If throttle triggered, auto-start remains active once started until the throttle trigger is returned to neutral.

DESIRED END RESULT: Avoiding wheel spin on starts and shutting engine off safely.

⚠ ***CAUTION:*** Remember that preset is not relative to EPA, so always check for binding if other changes have been made.

GOAL:	STEPS:	INPUTS:
Set auto-start to avoid wheel spin, while using **LV2**. (If using **LV3**, select **AT-START** from menu 1.) (If using **LV1**, first change the level selection, see p. 12.) Example: Trigger point of 95% so that any acceleration other than wide open off the line will not trigger the auto-start feature. Preset of 54% (determined on the track that this is the maximum acceleration you can have off the line without spinning.)	Open and Select Menu 1.	DN SEL
	Select **AT-START**.	UP UP UP UP UP SEL
	Select Auto-start mode.	UP − to **AT&SW**.
	Expert Tip: If you set up a switch in **FUNC-SW** (see pp. 34-35) assigned to auto-start, you can use that switch to turn on/off the Auto-start feature without having to go to the 95% throttle position.	
	Set pre-set position for throttle to go to when auto-start is in use.	UP + to **F54**.
	Set trigger point to activate auto-start.	UP + to **95**.
	Activate auto-start to be used on next full acceleration.	UP ±/☞ to **READY**.
	Test function on screen. Set desired end point (example 98%).	Pull trigger slowly until past 95%. * displays at **TGP**. **ATS** indicates **ACT, MODE** indicates **ON**. Release trigger. **ATS** returns to **OFF**. Press ±/☞ to re-activate.
	Close function and menu.	END END END
Where Next:	Set up engine cut: Set mode to **SW**, set preset. You must also set cut switch in **FUNC-SW** (pp. 34-35.) Assign a switch to **AT-START** using **FUNC-SW** (p. 28), then test auto-start using switch instead of trigger. Adjust the throttle's total travel (**EPA**): See p. 18. Adjust the brake's available travel/trim (**TH-ATL**)(**LV3**): See p. 37. Adjust the throttle servo's overall speed (**TH-SPEED**): See p. 23. Adjust throttle exponential (**TH-EXP**): See p. 20. Set up ABS braking (**ABS**): See p. 24. Set up a high idle for easier engines starts (**IDLE-UP**): See p. 27. Adjust brake mixing for separate front/rear brakes (**BRAKE-MIX**) (**LV3**): See p. 42.	

DEFINITIONS:

- ***Total Timer:*** System timer, does not reset/change with model selection, or when transmitter is turned off, storing total use time until it is reset.
- ***Racing Timer***: Model-specific timer; types:
  - ***Up Timer:*** Regular stop watch timer. Counts up from 0 until stopped. Runs consecutively until reset with model selection or lap reset.
  - ***Down Timer:*** Count-down timer. Counts negatively once desired time is passed (below 0). Runs consecutively until reset with model selection or lap reset.
  - ***Lap Memory Timer:*** Acts as a count-up timer, storing each lap and starting a new lap each time button is pressed, while also maintaining a total run time count-up alarm, with a pre-alarm warning time. Stores up to 100 laps, visible on **LAP-LIST** (see p. 31). Has a 3-second safety window where button press does not reset the lap.
  - ***Lap Navigate Timer:*** Count-up timer which alarms at a set total run time, but also has a navigation alarm which alarms every set interval (desired lap time), and then restarts the navigation alarm countdown on each button press or upon passing each navigation alarm time. (Example: 4 minute track race, desired lap time is 30 seconds. Nav alarm goes off if lap counter is not pressed before 30 seconds, then again after another 30 seconds, and so on until 4 minutes.) Great for practice-runs and working toward a target track time. Does ***NOT*** store individual lap times.
- **LAP START**: Switch assignment required to indicate start/stop, or the end of each lap in lap navigate and lap memory timers.
- **LAP RESET**: Switch assignment required to end timers and reset them to be used again.
- **RUN**: Timer is currently running, and displays total run timer, tracking total race time regardless of individual laps.
- **STP**: Timer is stopped.
- **RST**: Timer reset. Stops running timer, resets run timer, stores last lap to memory.
- **RDY**: Trigger-ready state. If set to ready, timer begins with trigger pull, doesn't require lap start button to be pressed to begin timer; however, lap button still needs to be pressed to store each lap. Trigger activity has no effect after starting the timer.
- **LAP**: Current lap number.
- **No.**: Number of laps stored and ready to display.
- **TIME**: Current running lap time.
- **NVALM**: Number of times the navigation alarm went off, indicating you exceeded your target lap time.
- **ALRM**: Total run time prior to desired alarm.
- **PRAL**: Pre-alarm, warning that desired time is approaching, beeps once every second until alarm time is reached.

AVAILABLE FOR: N/A

ADJUSTABILITY:

- ***Timer types:*** See 5 timer types listed above (including total timer).
- ***System Time:*** 0 to 99 minutes 59 seconds. Resets to 0 at 100 minutes.
- ***Status:*** Reset (timer is reset, button will start), ready (throttle trigger or button starts), run, stop.
- ***Alarm:*** Off, 1-99 minutes. Default = 4 minutes.
- ***Pre-Alarm:*** Off, 1-30 seconds, warning that alarm is about to sound. Beeps every second. Default = 5 sec.
- ***Lap:*** Navigate timer only: 3 seconds to 30 minutes, interval counter to nav. alarm. Default = 3 seconds.
- ***Switches:*** Assign lap start/stop and reset buttons in **FUNC-SW** (see pp. 34-35).

INTERACTION:

- Requires switch assignment in the **FUNC-SW** screen. (See pp. 34-35.)
- Laps stored with a lap memory timer are visible using **LAP-LIST**. (See p. 31.)

DESIRED END RESULT: Provide user accurate time data for tracking laps, practicing, keeping track of fuel and battery usage, etc.

⚠ ***CAUTION:*** Lap Memory has a 3-second safety. If button is re-pressed within 3 seconds, the timer is not reset a second time.

GOAL:	STEPS:	INPUTS:
Set up a lap memory timer to track lap times throughout a race, while using **LV2** menus. (If using **LV3**, select timer from Menu 1). (If using **LV1**, first change level selection to **LV2**. See p. 12.)	Assign desired lapstart and restart switches.	See **FUNC-SW** pp. 34-35.
	Open and select menu 1.	UP UP SEL
	Select **TIMER**.	UP UP SEL
	Set type to lap memory timer.	UP + + to **LAP MEMORY**.
	Set total race time to 5 minutes.	DN DN to **ALRM**. + to **5m.**
	Set pre-alarm time to warn you race end is nearing at 15 seconds.	DN + to **15s**.
	Set total timer/first lap timer to trigger when throttle is pulled.	UP UP ± Screen reads **RDY**.
	Test function on screen.	Pull trigger. Timer starts counting. Press selected switch (ex: PS-1) to store first lap. Note screen now displays the first lap's time for 3 seconds, then displays current running lap. Press selected reset switch to stop timer.
	Close function and menu.	END END END
Where Next:	***System timer:*** Reset radio's total timer after recharging to use as a method of tracking on time between charges: from home screen, press and hold ± for one second. View stored laps (**LAP-LIST**): See p. 31. Adjust switch assignments (**FUNC-SW**): See pp. 34-35. Place timer setup screen on quick menu for 2-keystroke access (**DIRC-CALL**): See p. 36.	

Levels **LV2, LV3** Only

Lap Listing LAP-LIST

DEFINITION: Displays all stored lap times, up to 100, and also stores total race time, including run time after last but before reset/stop.

ADJUSTABILITY:

- ***Reset single lap:*** Select lap, SEL cursor blinks next to it. Press ± together.
- ***Reset all laps in memory:*** Press ± and SEL together for 1 second.

INTERACTION:

- Requires switch assignment for lap counter in the **FUNC-SW** screen (see pp. 34-35).
- Requires set up of timer as Lap Memory Timer (see p. 30).
- Lap Navigation Timer does ***NOT*** store lap times (see p. 30).

DESIRED END RESULT: Store multiple lap times to analyze performance after the race.

GOAL:	STEPS:	INPUTS:
View laps previously run, then reset all laps, while using **LV2**. (If using **LV3**, select **LAP-LIST** from menu 1.) (If using **LV1**, first change level selection to **LV2**, p. 12.)	Open and Select Menu 1.	UP UP SEL
	Select **LAP-LIST**.	UP SEL
	Scroll through laps shown on screen.	UP or DN as needed.
	Reset all laps to prepare for next practice.	± and SEL together for 1 second.
	Close function and menu.	END END END
Where Next:	Change timer type to lap navigate timer (laps will not be stored) (**TIMER**): See p. 30. Adjust timer settings (**TIMER**): See p. 30. Change switch assignment to start/stop lap timer (**FUNC-SW**): See pp. 34-35.	

DEFINITION: Erases all data stored in a specific model memory.

AVAILABLE FOR: Current selected model only. Model # is displayed on screen.

INTERACTIONS:

- Resets settings for the specific model memory currently in use without resetting any settings for any other model in memory.
- Model reset **does not** reset:
  - Modulation;
  - System settings;
  - Adjuster;
  - Lap listings;
  - User name;
  - Direct selection menu setup.
- Model copy may be used prior to model reset to store a copy of this data, including to an optional **CAM**Pac.

DESIRED END RESULT: Delete all existing programming from this model memory only.

⚠ ***CAUTIONS:***

- Deleted data can not be restored.
- See list of functions NOT reset with a model reset under interactions.

GOAL:	STEPS:	INPUTS:
Reset all data in Model #M3, while already in model M3, and using the **LV2** programming menus. (If using **LV3**, select **MDL-RES** from menu 2.) (If using **LV1**, first change level selection. See p. 12.)	Open and select menu 2.	UP SEL
	Select **MDL-RES**.	DN SEL
	Confirm your change.	⊕⊖ for 1 second.
	If desired, return to **LV1**.	END UP UP UP SEL UP ⊕⊖
	Close.	END END END
Where Next?	Name the model (**MDL-NAME**): See p. 15. Copy the model (**MDL-COPY**): See p. 33. Select a different model (**MDL-SEL**): See p. 14. Select modulation (FM/PCM/HRS) (**MOD-MODE**): See p. 16. (Hint: remember to power off and back on to begin transmitting in new modulation.) Channel reversing (**CH-REV**): See p. 18.	

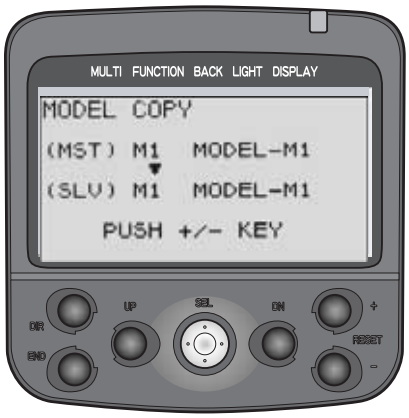

DEFINITION: Makes an exact copy of the current model, including its name.

AVAILABLE FOR: Current selected model only. Model # is displayed on screen.

ADJUSTABILITY: N/A

INTERACTION: Copies all settings, including model name, modulation, etc.

DESIRED END RESULT: Make an exact copy of a model for backup, to copy to **CAM**Pac to use in another radio, etc.

⚠ ***CAUTION:*** Any existing model data in the model memory copied INTO will be lost.

GOAL:	STEPS:	INPUTS:
Copy model M1 into model M3, while already in model M3 and using the **LV2** programming menus. If using **LV3,** select **MDL-COPY** from menu 2.) (If using **LV1**, first change level selection to **LV2**. See p. 12.)	Open and select menu 2.	UP SEL
	Select **MDL-COPY**.	DN DN SEL
	Select the model # to copy INTO.	DN DN to **M3**.
	Confirm your change.	⊕⊖ for 1 second.
	Close	END END END
Where Next:	Name the model (**MDL-NAME**): See p. 15. Select a different model (**MDL-SEL**): See P. 14. Select modulation (FM/PCM/HRS) (**MOD-MODE**): See p. 16. (Hint: remember to power off and back on to begin transmitting in new modulation.)	

DEFINITIONS:

- **Function:** Assigns functions to the 3 dials, 3 trimmers, and 3 switches on the radio. Upper right on home screen displays assignments to dials 1-3 and trims 1-3.
- **PS**: Push button switch. Also called switch, or SW. PS1 = SW1
  - **ALT**: Push button setting: push once for on, push again for off.
  - **NOR**: Push button setting: hold for on, release for off.

AVAILABLE FOR: Digital Dials 1, 2, 3 (DL 1-3); Switches 1-3 (PS 1-3), Digital Trims 1-3 (DT1-3). See transmitter image (inside front cover) for locations of each dial, switch and trimmer.

ADJUSTABILITY:

Available Functions	Abbreviation on setup screen	Abbreviation on home screen
	ALL DIALS/TRIMMERS:	
Dual rate; 2nd dual rate	**D/R; D/R2**	**D/R; D/R2**
ATL	**ATL**	**ATL**
Exponential (steer/forward/brake)	**EXP-S/EXP-F/EXP-B**	**EXPS/EXPF/EXPB**
Speed (steer turn/return; throttle)	**SPDT/SPDR ; THSPD**	**SPDT/SPDR; THSPD**
ABS (return/delay/cycle)	**ABSP/ABSD/CYCLE**	**ABP; ABSD; CYCL**
Acceleration (forward/brake)	**ACC-F/ACC-B**	**ACCF/ACCB**
Trim (steer/throttle)	**ST-TR/TH-TR**	**TRMS/TRMT**
Channel 3	**CH3**	**3CH**
Sub-trim (throttle/steer/ch 3)	**SBT-1/SBT-2/SBT-3**	**SBT1/SBT2/SBT3**
Idle-up	**IDLUP**	**IDLE**
Tilt mix (1>3/3>1)	**TLT13/TLT31**	**TL13/TL31**
Programmable mix (left/fwd/up; right/brk/dwn) (mix 1/2)	**PM1-A/PM1-B; PM2-A/PM2-B**	**PM1A/PM1B; PM2A/PM2B**
Brake mixing (rate/delay/balance)	**BK-RT/BK-DL/BK-BL**	**BKRT/BKDL/BKBL**
No function assigned	**OFF**	**OFF**
	ALL SWITCHES:	
Auto-start	**AT-START**	N/A
Throttle speed	**TH-SPEED**	N/A
ABS	**ABS**	N/A
Idle-up	**IDLE-UP**	N/A
2nd dual rate	**D/R 2nd**	N/A
Channel 3	**CH3**	N/A
Programmable mix 1/2	**PROG MIX 1/PROG MIX 2**	N/A
Lap start/reset	**LAP START/LAP RESET**	N/A
No function assigned	**OFF**	N/A

- Step amount can be adjusted for all dials/trimmers.
  - ***Trim functions (*ST-TR, TH-TR*)***: Increasing step decreases sensitivity of each click. Setting of 1 = 200 clicks for entire trim range; setting of 10 = 20 clicks for entire trim range. Range = 1-7,10. Default = 1.
  - ***Channel 3:*** Adjustable to perform like a 2- or 3-position switch, as well as a range of sensitivity. Setting of 1 = 200 clicks; setting of 50 = 4 clicks. Range = 1, 2,5,10,20,50, 3PS (3-position switch), 2PS (2-position switch). Default = 1.
  - ***All Other Functions:*** Step is the percent of the total value of that function changed by a single click. Range = 1-7,10. Default = 1.

- ***Response direction:***
  - Normal or reversed for all dials/trimmers, and switch 3.
  - Normal or alternate for switches 1 and 2.

INTERACTION:

- If multiples switches/dials/trims are assigned to do the same job, their settings are combined up to the limits of the function. For example, assigning steering trim to both DT1 and DL1 means moving either adjusts the trim from the current position up to the maximum available trim. (Total trim available is still the same, not doubled.)
- Digital: Since the dials and trims are digital, their physical position does not matter to the model memory. If a dial or trim is bumped when both switches are off, no change is made to the position remembered in the memory. For example, turn on the display. Note the steering trim position shown on screen. Turn the display off. With the display off, press the digital trims. Now turn the display back on. Note that the trim has not changed. The same is true for the digital dials, meaning no more need to try to "store" or "set" the dial positions before changing model memories to avoid unintentional changes in your other models!

DESIRED END RESULT: Create driver-specific setups for each car for easy adjustment of features on-the-fly.

⚠ ***CAUTION:*** Be sure you know what each switch/dial/trim is doing prior to every operation.

GOAL:	STEPS:	INPUTS:
Assign idle-up to the push button switch on the radio's handle (SW2 aka PS2), while using **LV2** menus. (If using **LV3**, select **FUNC-SW** from menu 2.) (If using **LV1**, first change level selection to **LV2**, p. 12.)	Open and select menu 2.	UP SEL
	Select **FUNC-SW**.	DN DN DN DN DN SEL
	Select switch #2 (SW2 aka PS.2).	DN DN to **SW2**.
	Set function to idle-up.	+ + + + to **IDLE-UP**.
	Reverse switch direction to have idle-up on unless button is held.	DN − to **ALT**.
	Close function and menu.	END END END
Let's do a dial setup now.		
Assign throttle acceleration forward side to grip dial 1 and brake side to grip dial 2. Adjust steps to 1% for very fine adjustments.	Open and select menu 2.	UP SEL
	Select **FUNC-DIAL**.	DN DN DN DN SEL
	For dial 1, select acceleration forward.	+ 9 times to **ACC-F.**
	Set step to 1%.	DN − to **1**.
	Select dial 2, acceleration braking.	DN DN + 9 times to **ACC-B**.
	Set step to 1%.	DN − to **1**.
	Reverse dial direction so turning dial 2 backward increases braking side of acceleration, turning dial 1 forward increases throttle side acceleration.	DN −
	Close function and menu.	END END END
Where Next:	Use servo screen to see effectiveness of dial/switch changes (**SERVO**) (**LV3**): See p. 39. Set up throttle acceleration (**TH-ACCEL**): See p. 26. Set up ABS (**ABS**): See p. 24. Set up servo speed (**ST-SPEED**, **TH-SPEED**): See p. 23. Set up tilt mixing (**BOAT-MODE**) (**LV3**): See p. 43. Set up brake mixing (**BRAKE-MIX**) (**LV3**): See p. 42.	

DEFINITION: Customize what functions are available at the push of 2 buttons (Direct menu and one more) by adjusting the Direct Selection menu. Note that direct menu selection/exit is always the DIR button.

AVAILABLE FOR: N/A.

ADJUSTABILITY: All functions are assignable to the 6 available buttons.

INTERACTION: None.

DESIRED END RESULT: 2-button access to the 6 most frequently used functions, such as model selection, timer, auto-start (to reset for next use) or other functions you are currently fine-tuning for your model.

⚠ ***CAUTION:*** **The direct button opens the direct selection menu and closes it again**, regardless of where you are in the programming. That function can not be assigned elsewhere, and nothing else can be assigned to that key.

GOAL:	STEPS:	INPUTS:
Customize direct select menu so button 1 opens auto-start and button 6 goes to timer, while using **LV2**. (If using **LV3**, select **DIRC-CALL** from menu 3.) (If using **LV1**, first change level selection to **LV2**, p. 12.)	Open and Select menu 2.	UP SEL
	Select **DIRC-CALL**.	UP UP UP UP SEL
	Edit button 1 to auto-start.	+ + + + to **AT-START**.
	Select button 6.	UP
	Edit button 6 to timer.	− 11 times to **TIMER**.
	Close function and menu.	END END END
	Press direct key to open direct menu.	DIR
	Select Auto-start.	END
	Return to direct menu.	DIR
	Close menu.	DIR
Where Next:	Change switch assignments (**FUNC-SW**): See p. 34-35. Change dial assignments (**FUNC-DIAL**): See p. 34-35.	

DEFINITIONS:

- ***ATL, electronic:*** (Adjustable throttle limiter) Adjusts total travel available to the braking side of the throttle servo, similar to adjusting EPA, but allows adjustment "on the fly" when ATL is assigned to a dial. When brake mixing is used in the unmixed mode, this adjusts the rear brake servo without changing amount of braking to front brake servo.

- ***ATL, mechanical:*** Decreases the physical distance the brake trigger can move. See p. 51.

AVAILABLE FOR: Braking only.

ADJUSTABILITY:

- **RATE**: 0 (no braking at all) to 100% (same as EPA). Default: 100%.
- ***Rate adjustment***: May be easily adjusted while driving (if assigned to a dial/trim, see **FUNC-DIAL**, pp. 34-35). Default assignment is to gripper dial 2.

INTERACTION: EPA affects total travel available to the servo. ATL is directly proportional to EPA.

DESIRED END RESULT: Quickly adjust overall braking sensitivity, including with a dial while driving on the track.

⚠ ***CAUTION:*** Dial 2 is assigned for ATL adjustment as a default, even if user does not realize it.

GOAL:	STEPS:	INPUTS:
While using **LV3**: • Reassign the ATL adjustment to digital trim 1; • Adjust the ATL setting from 100% to 20% (with the digital trim centered). (If using **LV1** or **LV2**, first change level selection, see p. 12.)	Use **FUNC-DIAL** to assign ATL to digital trim 1.	UP UP SEL UP UP SEL UP 9 steps to **DT1**. − to **ATL**. END END END
	While viewing home screen, adjust digital trim 1 until ATL reads 0.	Move trim 1, if necessary, until display reads **0** for **ATL**.
	Select ATL.	UP SEL DN SEL
	Adjust ATL to 20%.	− to **20%**.
	Close function and menu.	END END END
Where Next:	Adjust the throttle servo's EPA (**EPA**):See p. 18. Set up channel 3 control (**CH3-POSI**):See p. 40. Set up brake mixing for separate front/rear brakes (**BRAKE-MIX**):See p. 42. Set up tilt mixing for boats (**BOAT-MODE**):See p. 43.	

DEFINITIONS:

- ***Dual Rate, or primary dual rate:*** Decreases the vehicle's steering sensitivity across the entire range. Equivalent of decreasing ***steering*** EPA by that percentage. Assigned to grip dial 1 as a default to allow on-the-course adjustments. If grip dial is unassigned, dual rate may still be adjusted on-screen. Dual rate is always active, except when the 2nd dual rate switch is pushed. (3PK's dual rate is the same as the 9Z's AFR, and the first rate of dual rate in other aircraft style radio models.)
- ***Second Dual Rate:*** A second while-driving rate of servo response, available with the push of a switch. The 2nd dual rate is meant to be used to temporarily have more/less servo travel available without having to readjust the dual rate dial. Second dual rate is proportional to the EPA ***not the primary dual rate***. Examples: Used for getting away from walls, crashes, a single hairpin turn on an otherwise non-technical track.

AVAILABLE FOR: Steering only.

ADJUSTABILITY:

- **RATE**: 0 (no steering at all) to 100% (same as EPA). Default: 100%.
- ***Switch assignment*** (to change from primary dual rate to second dual rate): Must be set using **FUNC-SW**, see pp. 34-35. Default: no dual rate switch assigned; 2nd dual rate is not usable until a switch is assigned.
- ***Rate adjustment***: Both primary rate and 2nd rate adjustments may be assigned to any dial/digital trim (see **FUNC-DIAL**, pp. 34-35) to allow adjustment while driving. If no dial/trim is assigned, then adjustments are made only within the D/R function. Defaults: D/R on dial 1, 2nd D/R not assigned.

INTERACTIONS:

- EPA affects total travel available to steering servo. Both dual rates are directly proportional to the total EPA.
- Exponential adjusts how much the servo is moved around center without having any effect on the servo travel at full stick; dual rate uniformly decreases the servo's movement all along the travel.
- Speed Limiter slows how quickly the servo moves to a certain point without decreasing its overall travel rather than decreasing the servo's movement to decrease its sensitivity.

DESIRED END RESULT: Quickly adjust steering overall sensitivity with a dial while driving on the track; have a second travel rate available for unusual situations, such as a crash.

⚠ ***CAUTION:*** Dual rate is active as a default and is adjusted from normal setting (100%) with dial 1 unless it is reassigned by the user.

GOAL:	STEPS:	INPUTS:
While using **LV3**: ● Reassign digital trim 1 to the dual rate adjustment; ● Assign dual rate switching to switch 1; ● Adjust 2nd dual rate to slightly less than maximum (95%) for quick steering to get out of tight spots. (If using **LV1** or **LV2**, first change level selection, see p. 12.)	Use **FUNC-DIAL** to assign dual rate to digital trim 1.	UP UP SEL UP UP SEL UP 9 steps to **DT1**. − 12 steps to **D/R**. END END END
	Use **FUNC-SW** to assign dual rate switching to switch 1.	UP UP SEL UP SEL + + + + + to **D/R 2nd**. END END END
	Select dual rate.	UP SEL SEL
	Test the dual rate adjustment by moving digital trim 1.	Move digital trim 1 counterclockwise; see the rate decrease on-screen. (Note that the rate per click can be adjusted in the function dial screen.)
	Adjust 2nd dual rate down to 95%.	DN − to **95**.
	Test the 2nd dual rate switch by pressing switch 1.	Press switch 1 (below the wheel) and notice 2nd D/R Rate changes from **OFF** to **ON**, as primary rate changes from **ON** to **OFF**.
	Close function and menu.	END END END
Where Next:	Adjust the steering servo's EPA (**EPA**): See p. 18. Adjust steering channel exponential (**ST-EXP**): See p. 20. Adjust steering servo response speed (**ST-SPEED**): See p. 23. Set up channel 3 control (**CH3**): See p. 40. Set up brake mixing for separate front/rear brakes (**BRAKE-MIX**): See p. 42. Use servo screen to see exactly how dual rates are performing (**SERVO**): See below.	

Level **LV3** Only

Servo View SERVO

DEFINITION: Shows the exact outputs the transmitter is sending to the servos. Allows for easy testing/experimenting even when receiver and servos are not yet installed.

AVAILABLE FOR: throttle, steering, channel 3.

ADJUSTABILITY: N/A.

INTERACTION: Shows all servo interactions from programming.

DESIRED END RESULT: Confirm programming is having desired result before radio gear is set up in model.

GOAL:	STEPS:	INPUTS:
View screen after setting up steering dual rate to confirm switch and dials are working as planned, while using **LV3**. (If using **LV1** or **LV2**, first change level selection, see p. 12.)	Set up dual rates.	See page 38.
	Select servo display.	UP SEL UP UP UP SEL
	Holding full right turn, adjust dial to see change in total servo throw, then hold dual rate switch, and notice change in total throw.	
	Close function and menu.	END END END
Where Next:	Return to function and make adjustments as needed, or complete installation in model.	

Channel 3 Control **CH3-POSI** — Level **LV3** Only

DEFINITION: Sets the default or neutral position for the channel 3 servo. Defaults to being adjustable with dial 3.

AVAILABLE FOR: channel 3 only.

ADJUSTABILITY: -100% to 0 to +100%. Default adjusts with dial 3, may be reassigned with **FUNC-DIAL** (see pp. 34-35).

INTERACTION: Channel 3 position is relative to channel 3's EPA.

DESIRED END RESULT: Fine tune the channel 3 neutral position. May also be used to adjust channel 3 to a specific position and leave it there if adjustability is not assigned to a dial (see **FUNC-DIAL**, pp. 34-35).

⚠ ***CAUTION:*** Dial 2 defaults to ATL adjustment, even if user does not realize it.

GOAL:	STEPS:	INPUTS:
While using **LV3**: ● Reassign the channel 3 adjustment to digital trim 3; ● Adjust the channel 3 "center" position from 0 to 18% (with the digital trim centered). (If using **LV1** or **LV2**, first select level **LV3**, see p. 12.)	Use **FUNC-DIAL** to assign CH3 to digital trim 3.	UP UP SEL UP UP SEL UP UP UP to **DT3**. + to **CH3**. END END END
	While viewing home screen, adjust digital trim 3 until 3CH reads 0.	Move trim 3, if necessary, until display reads **0** for **3CH**.
	Select channel 3 positioning.	UP SEL DN DN SEL
	Adjust channel 3 position to 18%.	+ to **18.0%**.
	Close function and menu.	END END END
Where Next:	Adjust channel 3 servo's EPA (**EPA**): See p. 18. Set up brake mixing to use channel 3 for separate front/rear brakes (**BRAKE-MIX**): See p. 42. Set up tilt mixing to use channel 3 for boats (**BOAT-MODE**): See p. 43. Set up programmable mixes to use channel 3 (**PRG-MIX1,2**): See below.	

Programmable Mixes **PRG-MIX1, PRG-MIX2** — Level **LV3** Only

DEFINITIONS:

- ***Programmable mixing function:*** Allows user to create mixing between the steering, throttle and channel 3 servos. Brake mixing is an example of built-in mixes.
- ***Master:*** The channel the slave will follow. In brake mixing, the throttle channel's braking side.
- ***Slave:*** The channel that follows the master. In brake mixing, channel 3 (front brakes).
- ***Offset:*** Amount off center to adjust the mix.
- ***Mix Mode:*** Selects whether slave moves exactly based upon the master control's movement (unmixed) or the master channel's servo movements after any mixing (mixed). Brake mixing unmixed means front brakes respond exactly based upon trigger position while rear braking is changed by ABS, Speed Limiter, etc.
- ***Trim:*** Sets whether the slave channel is (**ON**) or is not (**OFF**) adjusted with the master when using the master channel's trim.

AVAILABLE FOR: Throttle, steering, channel 3.

ADJUSTABILITY:

- ***Master:*** Throttle, steering, channel 3.
- ***Slave:*** Throttle, steering, channel 3.
- ***A and B adjustments [Up/forward/left and down/brake/right (for ch3/throttle/steering respectively)]:*** -100% (move exact opposite of master) to 0 (no movement of slave) to +100% (move exactly same as master). Default: 50%. Adjustable while in use by selecting a dial/trim for programmable mix adjustments A and B in **FUNC-DIAL**, pp. 34-35.
- ***Offset:*** -100% to 0 to +100%. Default: 0%.
- ***Master mixed mode:*** Off, mixed. Default: off.
- ***Trim:*** Off, On. Default: Off.
- ***Switch:*** An on/off switch may be assigned for each mix in **FUNC-SW** (see pp. 34-35).

INTERACTION: EPA affects total travel available to both servos. Master mixed mode "mixed" means that all other functions affecting the primary channel also affect the secondary channel.

DESIRED END RESULT: Varies based upon user setup.

⚠ ***CAUTION:*** Be sure to test all mixes at every step to ensure no unexpected difficulties occur.

GOAL:	STEPS:	INPUTS:
Set up a programmable mix from steering to lights so that headlights turn with steering wheel, while using **LV3**. (If using **LV1** or **LV2**, first select level **LV3**, see p. 12.)	Select programmable mix 1.	UP UP SEL SEL
	Make mix active.	UP UP UP UP + to **ACT**.
	Set master channel as steering.	UP UP (already steering)
	Set slave channel as ch 3.	DN + to **CH3**.
	Set left and right travel as 100%.	UP UP + to **100%**. UP + to **100%**.
	Set master mixed mode to mixed so other mixes affecting throttle position also affect headlight angle.	UP UP + to **MIX**.
	Set trim on so movement of steering trim also moves headlights.	DN + to **ON**.
	Close function and menu.	END END END

GOAL:	STEPS:	INPUTS:
Use mixes to increase steering travel slightly when dual rate and EPA are not enough, while using **LV3**. [Note that anything more than 10% (or less if subtrim is >0) will not move the servo any further, as the servo's maximum mechanical travel is exceeded. Be sure to check actual travels, including sub trims, by testing servo operation.] (If using **LV1** or **LV2**, first select level **LV3**, see p. 12.)	Select programmable mix 1.	UP UP SEL SEL
	Make mix active.	UP UP UP UP + to **ACT**.
	Set master channel as steering.	UP UP (already steering)
	Set slave channel as steering.	DN + to **ST**.
	Set left and right travel as 10%.	UP UP − to **10%**. UP − to **10%**.
	Leave offset at 0 and trim off.	UP
	Set master mixed mode to mixed so other mixes affecting steering also. See the increase.	UP + to **MIX**.
	Close function and menu.	END END END
Where Next:	Programmable mix to set up differential steering (similar to the brake mixing program but for 4-wheel steering or for 2-wheel steering using 2 servos and creating adjustable acumen): see **www.futabarc.com\faq\faq-3pk.html** Adjust steering EPA (**ST-EPA**): See p. 18. Adjust steering dual rate (**ST-DR**): See p. 38. Adjust steering subtrim (**SUB-TRIM**): See p. 22.	

DEFINITIONS:

- ***Brake Mix:*** Used when model has separate front and rear brakes, and they must be adjusted separately. Uses channel 2 for rear brakes/throttle, channel 3 for front brakes.
- **RATE**: Proportion of total front brake travel applied when full rear brake is applied.
- **DELAY**: Waits to brake either front or rear, allowing the other to brake first.
- **BALN**: Balance. Adjusts the proportion of front to rear braking.
- **TGP**: trigger point. At what amount of trigger the brake mixing takes effect.
- **MXMD**: Mixing mode. Front brakes respond based solely on trigger position (**UNMIX**), or other functions' adjustments to rear brakes, such as ABS, also effect front brakes (**MIXED**).

AVAILABLE FOR: N/A

ADJUSTABILITY:

- **RATE**: 0 (no front braking) to 120% (front brake servo moves 20% more than rear brake).
- **DLY**: 0 (no delay) to 100% (maximum delay, about 2 seconds); F (front) or R (rear). Either F or R MUST be 0; may both be 0.
- **BALN**: 80 (decreased braking) -100% (no change), F or R. Either F or R must be 100%, may both be 100%.
- **TGP**: 10 (front brakes active even with small amounts of brake) – 100% (front brakes applied only when full brake given.)
- **MXMD**: **UNMIX** (front brake obeys trigger position only); **MIXED** (front brake obeys all braking mixes).

INTERACTIONS:

- ABS, Speed Limiter, exponential, etc., all affect the rear brake; mix mode **MIXED** causes them to also affect the front.
- Mixing is based upon total EPA of each servo. Example: Rear servo moves 60° at 100 EPA. Front servo moves 40° at 100 EPA. Rate of 100% moves front servo full 40° when rear servo moves 60°. Rate of 120% means front servo moves 40° times 120%, or 48°, when rear servo moves 60°.

DESIRED END RESULT: Model brakes as rapidly as possible without negative handling effects such as squatted shocks, etc.

⚠ ***CAUTION:*** Unmixed results in the front brake getting drastically different inputs than the rear when functions such as ABS are used (no pulsing on front).

GOAL:	STEPS:	INPUTS:
While using **LV3**, setup brake mixing for 1/5th scale offroad vehicle, with front brake responding 75% as much as rear, with a slight delay to allow rear brakes to respond first, no change in balance, front brake on only after 80% brake and front/rear both obeying ABS mixing. (If using **LV1** or **LV2**, first select level **LV3**, see p. 12.)	Open and select menu 1.	DN SEL
	Select **BRAKE-MIX**.	UP UP UP UP SEL
	Activate brake mixing.	UP − to **ACT**.
	Adjust rate to 75%.	DN − to **75**.
	Adjust front delay to 10.	DN + to **10**.
	Adjust trigger point to 80%.	DN DN + to **80**.
	Set to mixed mode to use all rear brake mixing for front brakes also.	DN − to **MIXED**.
	Close function and menu.	END END END
Where Next:	*NOTE: All of these functions interact with the throttle servo as well and are all inter-related. Adjusting any one may affect the performance of the others as described in interactions.* Adjust the throttle servo's EPA (**EPA**): See p. 18. Adjust overall braking speed (**TH-SPEED**): See p. 23. Adjust throttle exponential (**TH-EXP**): See p. 20. Adjust ABS braking (**ABS**): See p. 24. Set up smooth acceleration off of the start and also engine cut (**AT-START**): See p. 28.	

DEFINITIONS:

- ***Boat mode:*** Set ups to fit specific needs of boat models rather than cars.
- **TRG-BRK:** Trigger-Brake operation. Shuts off brake side of servo movement for boats without braking/reverse.
- ***Tilt Mixing***: adjusts outboard engine positioning with rudder inputs, and adjusts rudder with outboard engine adjustments.
  - ***Channel 1 > 3***: mix from steering (rudder) to outboard. Utilized when the boat drops too much (or too little) into the water when giving rudder input.
  - ***Channel 3 > 1***: mixing from outboard to steering (rudder). Utilized when the torque of the engine has more effect as the boat's position changes in the water, causing the boat to yaw left under acceleration.

AVAILABLE FOR: N/A

ADJUSTABILITY:

- **TRG-BRK**: Normal (brake operates); cut-off (no brake/reverse operation).
- ***CH 1>3 and CH 3>1***: -100% (moves exactly opposite) to 0 (no mix) to +100% (moves exactly the same as master.)

INTERACTIONS:

- EPA, steering expo, speed, dual rate, etc., all affect the 3rd channel (master mixing is on and can not be set to off.)
- Reversing the channel 1 servo does NOT reverse the channel 3 servo.

DESIRED END RESULT: Keep outboard-powered boat up on its step and traveling straight at high speeds/rapid acceleration, and adjust the boat's angle in the water for ideal turning with minimum drag.

⚠ ***CAUTION:*** Remember, EPA of channel 1 affects channel 3, so check for binding after all changes.

GOAL:	STEPS:	INPUTS:
Set up an outboard boat's engine tilt to set the boat lower in the water when turning for better "bite," while using **LV3**. (If using **LV1** or **LV2**, first select level **LV3**, see p. 12.)	Open and select menu 2.	UP UP SEL
	Select **BOAT-MODE**.	DN DN SEL
	Turn off brake function.	− to **CUT OFF**.
	Activate tilt mixing.	UP − to **ON**.
	Adjust channel 3 to 1 (outboard to steering) mixing to 0 (disabling it).	UP + to **0**.
	Decrease rudder-to-outboard to 20%.	UP − to **20**.
	Close function and menu.	END END END
Where Next:	Adjust the throttle servo's EPA (**EPA**): See p. 18. Adjust channel 3's center point (**CH3-POSI**): See p. 40. Change channel 3's control (**FUNC-DIAL**): See pp. 34-35. Assign channel 3 to 1 mixing to a dial to adjust while in use (**FUNC-DIAL**): See pp. 34-35. Set up engine cut (**AT-START**): See p. 28. Set up steering dual rates (**ST-D/R**): See p. 38.	

Fine Tuning ESC Readability (for HRS receivers ONLY) **MC-SETUP** Level **LV3** Only

DEFINITION: Adjusts frame rate of transmitter output to throttle channel for setting up non-Futaba ESCs with HRS systems. HRS frame rate is faster than many speed controls can properly read to complete their auto setups. **Important**: Always try to setup your ESC normally first.

AVAILABLE FOR: HRS receivers ONLY.

ADJUSTABILITY: N/A.

INTERACTION: Must be used only when you are using an HRS receiver and the ESC fails to set up normally. When setting up, do not use receiver; use only with the proper cords (not included), connecting the speed control as shown below.

DESIRED END RESULT: Quick, easy setup of non-Futaba ESCs with HRS receivers.

⚠ ***CAUTIONS:***

- ONLY use when you will be using HRS receivers/modulation.
- MUST use the two-way cord and DSC cord to connect ESC directly to transmitter to complete this setup. Reciever is not plugged into the ESC at this time.
- Transmitter switch MUST be turned off after setup is executed or the mode cannot be reset and the system can not transmit properly. Warning will display "**CAUTION! NOW MOD OFF**".

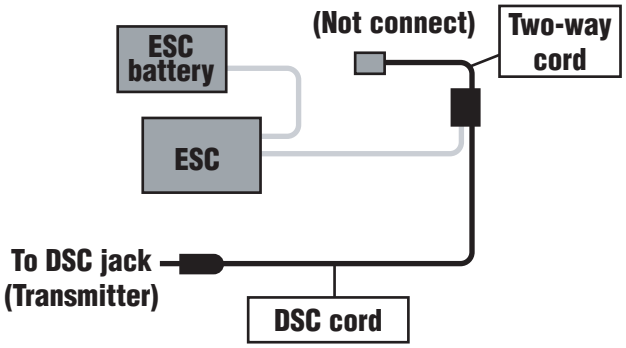

GOAL:	STEPS:	INPUTS:
Complete auto-setup of a non-Futaba ESC that is not setting up properly on its own when in use with an HRS receiver, while using **LV3**. (If using **LV1** or **LV2**, first select level **LV3**, see p. 12.)	Be sure transmitter is in HRS mode. Be sure battery is plugged in and ESC is on.	See modulation, p. 16.
	Turn transmitter off. Set up DSC/two-way cord. Transmitter will power itself up automatically.	See setup diagram above.
	Select **MC-SETUP** function.	UP SEL UP UP SEL
	Activate amp setup.	for at least one second.
	Follow manufacturer's auto-setup instructions for ESC.	
	Close function and menu.	END END END
	TURN TRANSMITTER OFF. (Transmitter can not transmit until power is cycled.) Disconnect two-way cord and DSC.	
Where Next:	Adjust subtrim until motor is not spinning at neutral (**SUB-TRIM**): See p. 22. Setup ABS braking (**ABS**): See p. 24. Adjust throttle/ESC speed to minimize wheel spin (**TH-SPEED**): See p. 23. Setup throttle acceleration for spin-free starts (**TH-ACCEL**): See p. 26.	

DEFINITION: Calibrates electronic positioning to mechanical movement of controls. Even if you never have a crash, your R/C vehicle needs occasional alignments and mechanical adjustments to keep it "in tune" and in trim. Similarly, all transmitters need regular maintenance to keep everything properly aligned. But unlike all other transmitters which just have to be driven "as is" until professionally adjusted/repaired, you can temporarily adjust your 3PK to keep driving as if it were new, then happily wait until your non-racing season when you can send it for its regular maintenance.

AVAILABLE FOR: Throttle, steering.

ADJUSTABILITY: Neutral and left/right vs. neutral/brake.

INTERACTION: Adjuster affects the mechanical position the radio thinks is center/neutral, and also the end points. Correcting any minor slippage/wear in the transmitter with adjuster will temporarily correct the out of trim problems until the radio can be serviced. All programming functions operate based upon the radio's neutral and full left/right or neutral/brake positioning.

DESIRED END RESULT: Correct for minor slippage/wear/drift in the steering and throttle to provide like-new performance.

⚠ ***CAUTIONS:***

- ***Need for regular service:*** Slippage is a sign of wear to the transmitter. Be sure to have your radio serviced regularly (we recommend annually) to check for/service other wear and tear on the radio and also to ensure proper transmitter tuning.
- ***Correction range:*** If the adjustment point shown is not close to the default settings (100%, 0, 100%), the system will not store the new positions, and an error message of "**FAIL! NOT CHANGED**" is displayed. Retry process. If data can not be stored, the radio is too far out of alignment to use. Send for service promptly (see p. 4).

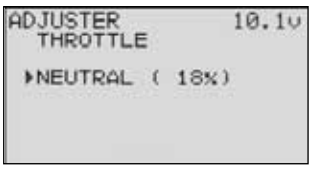

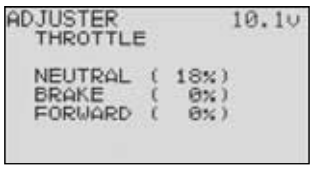

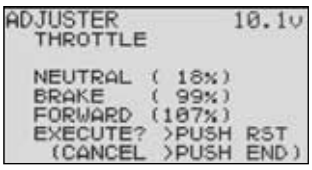

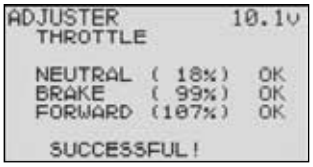

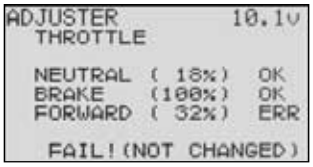

GOAL:	STEPS:	INPUTS:
Complete software adjustment to fix steering mechanical offset.	Open menu 3 and select adjuster.	UP SEL UP SEL
	Select steering.	SEL
	Set steering neutral.	Lightly pull on the steering wheel, pulling it away from the transmitter. Let go and SEL
	Set left and right ranges.	Lightly turn wheel full left, let go, turn full right. Let go and SEL
	Confirm desired correction.	⊕⊖
	Close function and menu.	END END END
Where Next:	Back to the track!	

APPENDIX I
Precautions and Warnings

Application, Export, and Modification

1. This product is designed for **surface** models only. It is not intended for use in any application other than the control of **surface** models for hobby and recreational purposes. The product is subject to regulations of the Ministry of Radio/Telecommunications and is restricted under Japanese law to such purposes. It is also subject to the regulations of the FCC and is restricted under U.S. law to such purposes.

2. Exportation precautions:
   (a) When this product is exported from the country of manufacture, its use is to be approved by those laws of the country of destination that govern devices that emit radio frequencies. If this product is then re-exported to other countries, it may be subject to restrictions on such export. Prior approval of the appropriate government authorities may be required. If you have purchased this product from an exporter outside your country, and not the authorized Futaba distributor in your country, please contact the seller immediately to determine if such export regulations have been met.

   (b) Use of this product with other than models may be restricted by Export and Trade Control Regulations, and an application for export approval must be submitted. In the US, use of 72MHz (aircraft only), 75MHz (ground models only) and 27MHz (both) frequency bands are strictly regulated by the FCC. This equipment *must not* be utilized to operate equipment other than radio controlled models. Similarly, other frequencies (except 50MHz, for HAM operators) must ***not*** be used to operate models.

3. Modification, adjustment, and replacement of parts: Futaba is not responsible for unauthorized modification, adjustment, and replacement of parts on this product. Any such changes may void the warranty.

Liability, Warranty

1. Please see the enclosed warranty card for detailed information on warranty coverage. If you have questions, please contact our service facility at the addresses provided on page 4.
2. Futaba and its agents are not responsible or liable for the use of this product in any manner.
3. Futaba does not guarantee compatibility with any non-Futaba product and Futaba will not be responsible for problems caused by the use of non-Futaba parts or equipment in conjunction with this radio system.
4. Opening, modifying, repairing, replacing parts, or otherwise making any use of each component other than as described in this manual, voids the warranty for that component. Futaba is not responsible for any such modifications, etc

The Following Statement Applies to the Receiver (for U.S.A.)

This device complies with Part 15 of the FCC rules. Operation is subject to the following two conditions:
(1) This device may not cause harmful interference, and
(2) This device must accept any interference received, including interference that may cause undesirable operation.

Battery Recycling

(for USA)

The RBRC™ SEAL on the nickel-cadmium battery contained in Futaba products indicates that Futaba Corporation of America is voluntarily participating in an industry-wide program to collect and recycle these batteries at the end of their useful lives, when taken out of service within the United States. The RBRC™ program provides a convenient alternative to placing used nickel-cadmium batteries into the trash or municipal waste system, which is illegal in some areas.

You may contact your local recycling center for information on where to return the spent battery. Please call 1-800-8-BATTERY for information on NiCd battery recycling in your area. Futaba Corporation of America's involvement in this program is part of its commitment to protecting our environment and conserving natural resources.

NOTE: Our instruction manuals encourage our customers to return spent batteries to a local recycling center in order to keep a healthy environment.

RBRC is a trademark of the Rechargeable Battery Recycling Corporation.

MEANING OF SPECIAL MARKINGS

Pay special attention to safety where indicated by the following marks:

⚠ **DANGER -** Procedures which may lead to dangerous conditions and cause death/serious injury if not carried out properly.

⚠ **WARNING -** Procedures which may lead to a dangerous condition or cause death or serious injury to the user if not carried out properly, or procedures where the probability of superficial injury or physical damage is high.

⚠ **CAUTION -** Procedures where the possibility of serious injury to the user is small, but there is a danger of injury, or physical damage, if not carried out properly.

⃠ = Prohibited ❗ = Mandatory

Warning: Always keep electrical components away from small children.

To ensure the safety of yourself and others, please observe the following precautions:

❗ **Have regular maintenance performed.** Although your radio does not have a battery to protect the model memories, it still should have regular checkups for wear and tear. In the US, we recommend sending your system to the US Futaba Service Center annually for a complete checkup and service.

⚠ **CAUTION - Before Using Your System…**

1. **ALWAYS** be sure the receiver, servo(s), ESC, crystal and connectors are fully connected prior to every operation. Vibration, which occurs in all models, means regular inspections and maintenance are critical.
2. **ALWAYS** protect the receiver and NiCd battery from vibration by mounting them in thick double-sided tape or foam.
3. ***Aquatic users:*** **ALWAYS** protect all radio equipment from potential water damage by waterproofing. Send any equipment subjected to water, fuel or other corrosive materials for testing prior to re-use.
4. **NEVER** cut or coil your receiver antenna or bundle it with any servo leads, battery wires, carbon fiber, metal or other conductive materials.
5. **ALWAYS** keep the receiver antenna at least 1” away from motor/battery/ignition/other wiring carrying heavy current.
6. ***Electric Users*****: ALWAYS** install the ESC heat sinks such that they can not come into contact with plastic, aluminum, carbon fiber, or other conductive materials, or a short circuit may occur.
7. **ALWAYS** operate each servo full distance both ways and check for buzzing, binding, loose linkages, chatter, or “stepping” in the movement (check for broken servo gears).
8. **ALWAYS** use the rubber grommets for servo installation, and ensure the servos do not come into direct contact with the mount or anything that conducts electricity.
9. ***Electric Users*****: ALWAYS** install capacitors on electric motors to suppress electrical noise.
10. **ALWAYS** inspect your model for metal-to-metal contact (including while engine/motor is running) which could create electrical noise and result in erratic system operation.
11. **ALWAYS** range check your system.
12. **NEVER** leave the radio system or models within reach of small children. NiCd batteries can be very dangerous when mishandled and can cause chemical damage.
13. **NEVER** store your radio equipment and models where they will be exposed to extreme heat or cold, direct sunlight, high humidity, large quantities of dust, steam or condensation.
14. **NEVER** expose the plastic parts of your radio system to raw fuel, oil, exhaust, water.
15. **NEVER** touch the engine, motor, speed control, or any other part of the model which generates heat during operation until the model is not operating, has been fully turned off and allowed to cool. These parts may be very hot and can cause serious burns.
16. **ALWAYS** display a frequency flag when operating your model.
17. **NEVER** operate this R/C system when you are tired, not feeling well, or under the influence of alcohol or drugs.
18. **NEVER** operate near other radio control activity areas, on any ponds or lakes where rowboats or swimmers are present, or near high tension power lines or communications broadcasting antennas.

Charge the batteries! (See Caring for your NiCd batteries, p. 49, for details.**)** Always recharge the transmitter and receiver batteries for at least 8 hours before each session. A low battery will soon die, causing loss of control and a crash. When you begin your session, reset your radio's built-in timer, and during the session pay attention to the duration of usage.

Stop operating your radio long before your batteries become low on charge. Do NOT rely on your radio's low battery warning systems, intended only as a precaution, to tell you when to recharge. Always check your transmitter *and* receiver batteries prior to each use.

Before operating, make sure that your frequency is not already in use, and secure any frequency control device (pin, tag, etc.) for that frequency before turning on your transmitter. **It is never possible to operate two or more models on the same frequency at the same time.** Even though there are different types of modulation (AM, FM, PCM) and brands, only one model may be operated on a single frequency at any one time.

To prevent possible damage to your radio gear, turn the power switches on and off in the proper sequence:

1. Position throttle at idle, or otherwise disarm your motor/engine.
2. Turn on the transmitter power and allow your transmitter to reach its home screen (if applicable.)
3. Confirm the proper model memory has been selected (if applicable.)
4. Fully extend the transmitter antenna.
5. Turn on your receiver power or speed control power switch.
6. Test all controls. If a servo operates abnormally, don't use until you determine the cause of the problem. *(For PCM and HRS systems only: Test to ensure that the FailSafe settings are correct by waiting at least 2 minutes after adjusting; then, turn the transmitter off and confirm the proper servo movements. Turn the transmitter back on. See page 17 for details on FailSafe functions.)*
7. Complete a full range check.
8. After use, bring your throttle to idle, engage any kill switches or otherwise disarm your motor/engine.
9. Turn off receiver power.
10. Turn off transmitter power.

If you do not turn on your system in this order, you may damage your servos or control surfaces, flood your engine, or in the case of electric-powered or gasoline-powered models, the engine may unexpectedly turn on and cause a severe injury.

If you place your transmitter on the ground, be sure that the wind won't tip it over. If it is knocked over, controls may be accidentally moved. Also, damage to your transmitter may occur.

Before running the model, be sure to extend the transmitter antenna to its full length. A collapsed antenna will reduce your range and cause a loss of control. Try to avoid pointing the transmitter antenna directly at the model, since the signal is weakest in that direction.

Don't operate in the rain, drive unprotected electronics through puddles or use when visibility is limited! Water or moisture may enter the transmitter through the antenna or other openings and cause erratic operation or loss of control. If you must use in wet weather during a contest, be sure to cover your transmitter with a plastic bag or waterproof barrier. Never use if lightning is expected.

MANDATORY PROCEDURES for use with the High Response System (HRS) receivers

Use ONLY:

- Servos: Unregulated 6-Volt compatible Digital servos
- Battery: 6-Volt Unregulated NiCd or NiMH battery
- Mode: Transmitter MUST be set to HRS mode (see p. 7 and p.16 for details)
- Transmitter: Futaba's 3PK is the first radio sold in the US with HRS capability. At this time, only the 3PK may be used with the HRS receivers. Be sure to check any other transmitter's operator's manual before attempting to use with an HRS receiver.
- NOTE: Do not attempt to operate with the Futaba FailSafe Unit (FS1) with an HRS receiver. Instead use the FailSafe settings built into the transmitter. (see p. 17 for details.)

CARING FOR YOUR NiCd BATTERIES

Charging Your System's Batteries

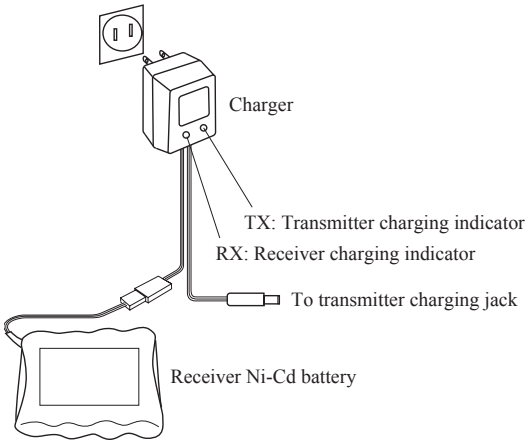

1. Connect the transmitter charging jack and receiver NiCd batteries to the transmitter and receiver connectors of the charger.

2. Plug the charger into a wall socket.

3. Check that the charger LED lights.

The initial charge, and any charge after a complete discharge, should be at least 18 hours to ensure full charge. The batteries should be left on charge for about 15 hours when recharging the standard NiCd batteries after normal use.

You should fully discharge your system's batteries periodically to prevent a condition called memory. If you regularly use only a small amount of the battery's capacity, the memory effect can reduce the actual capacity even if the battery is fully charged. You can cycle your batteries with a commercial cycling unit*, or by leaving the system on and exercising the servos by moving the transmitter sticks until the transmitter shuts itself off. Cycling should be done every four to eight weeks, even during the winter or periods of long storage. Keep track of the batteries' capacity during cycling; if there is a noticeable change, you may need to replace the batteries.

*Note that your 3PK transmitter system is protected from overcharge. If the battery is charged with a quick charger for other than digital RC systems, it may not be fully charged.

NiCd Handling Precautions

- ⚠ **CAUTION -** NiCd electrolyte is a strong alkali. Should you come in contact with even the smallest amount:
- **EYES:** ***DO NOT RUB***, wash immediately with water, and seek medical attention at once. The electrolyte can cause blindness.
- **CLOTHING/SKIN:** Wash with water immediately. Seek medical attention if rash occurs.
- **DO NOT** attempt to charge your 8-cell transmitter pack on the 4-cell receiver plug of the wall charger!
- **NEVER** plug charger into an outlet other than the standard voltage (US is 110V).
- **NEVER** insert or remove the charger while your hands are wet.
- **ALWAYS** use the provided charger or a quick charger specifically for remote control modeling. Overcharged NiCds can result in severe burns, fire, breakage, or electrolyte leakage.
- **NEVER** try to recharge an alkaline dry cell battery.
- **ALWAYS** disconnect the radio from the charger and the charger from the wall when not in use.
- **ALWAYS** double-check that your batteries are fully charged prior to use.
- **ALWAYS** remove or disconnect the receiver NiCd when the vehicle is not in use to avoid accidental turn-ons.
- **NEVER** use commercially provided single NiCd battery cells. Charging these cells in your R/C system or with R/C system chargers may result in damage to the equipment and chargers.
- **NEVER** drop the NiCd battery or expose it to strong shock or vibration. Crashed equipment should always be sent for service to test for internal damage.
- **NEVER** leave the R/C system or batteries within the reach of small children.
- **ALWAYS** store the system with the batteries in a discharged state and in a cool/dry place.
- **ALWAYS** remove the transmitter and receiver batteries from the transmitter/vehicle for long-term storage.

APPENDIX II
Adjustments, modifications and replacements

Mechanical ATL Adjustment: Make this adjustment when you want to decrease the total travel of the brake (push) side of the throttle trigger. For digital ATL, see p. 37.

Note: This is a mechanical stop screw only, and does not move the neutral point or affect the acceleration (pull) side of the throttle trigger. Creating a shorter stroke allows for more rapid response when the linkage or end point is adjusted to create the same total servo travel.

Adjustment: Using a Phillips screwdriver, adjust the trigger brake (back) stroke by turning the screw through the adjusting hole indicated by the arrow in the figure. (The screw moves the throttle trigger stopper.)

- When the adjusting screw is turned clockwise, the stroke becomes narrower. Make this adjustment when you want to make the throttle trigger brake (back) stroke smaller (more responsive).

⚠ **CAUTION -** When the stroke is adjusted, the throttle servo travel must be adjusted by linkage or programmed setting to gain the same total movement.

Mechanical ATL adjusting screw

Wheel Tension Adjustment: Make this adjustment when you want to change the steering wheel spring tension.

Adjustment: Turn the screw inside the adjusting hole using a 1.5mm hex wrench.

- Turning the adjusting screw clockwise increases the spring tension.

⚠ **CAUTION -** If turned too far counterclockwise, the adjusting screw may fall out.

Note: To adjust the wheel and trigger calibration, see **ADJUSTER** p. 45.

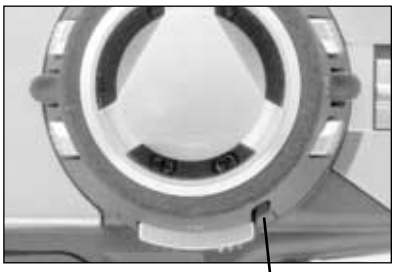

Tension adjusting screw

CHANGING WHEEL POSITION/MODIFYING FOR LEFT-HAND USE

•Changing the wheel position

The wheel position can be offset by using the included accessory offset adapter. The wheel angle can also be adjusted.

•Modification for left-hand use

The wheel section can be moved to the back of the transmitter for left-handed operation.

Removing the steering wheel unit

1. After removing the wheel cap, carefully remove the screw holding the steering wheel.

4. Remove the wheel unit cover. Be very careful or the wheel shaft will fall out.

2. Remove the steering wheel.

5. Remove the 4 screws from the wheel unit.

3. Remove the 4 screws from the wheel unit cover.

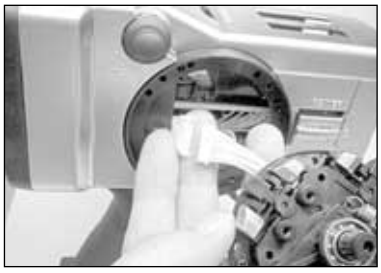

6. Disconnect the wheel unit wiring harness.

Steering Wheel

screw (large) x1

Wheel Unit Cover

screw (small) x4

Wheel Unit

screw (middle) x4

Changing wheel position

1. Connect the wheel unit wiring harness through the offset adapter. Install the adapter using four 2.5mm hex bolts attached.

2. Reinstall the wheel unit, wheel unit cover, wheel, and wheel cap in same position as they were removed.

Modifying for left-hand use

1. Remove the wheel back cover using 2.5mm hex wrench.

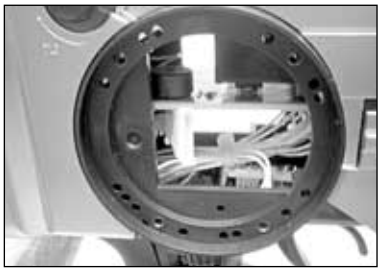

2. Push the wheel unit wiring harness in the opposite side.

3. In opposite side, connect the wheel unit wiring harness and reinstall the wheel unit, wheel unit cover, wheel, and wheel cap in the same position as they were removed.

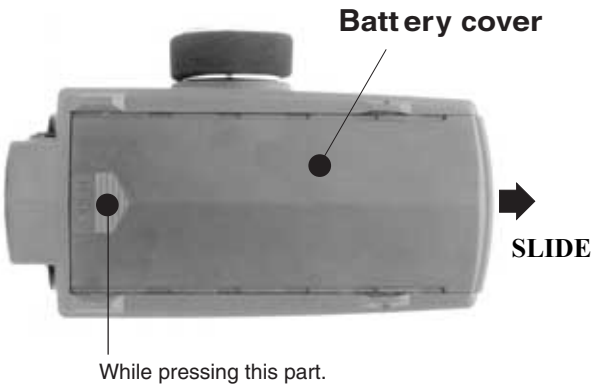

Battery Replacement

1. Slide the transmitter battery cover in the arrow direction while pressing the part shown in the figure.

2. Replace the NiCd battery pack or dry cell batteries.

3. Slide the battery cover back onto the transmitter.

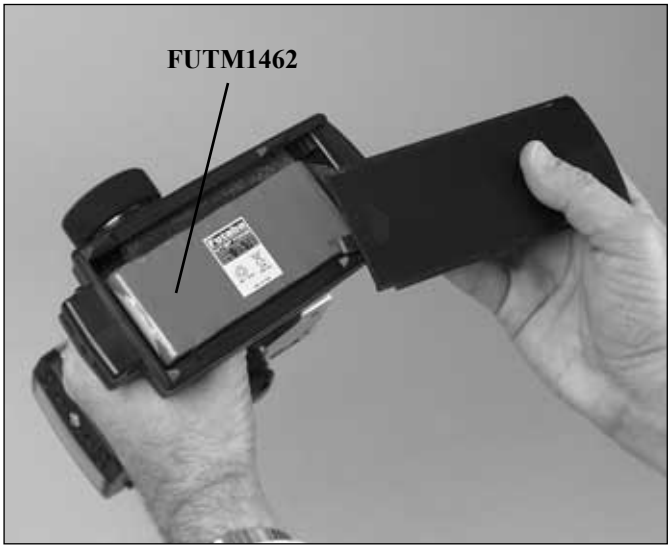

NiCd Battery system

The NiCd battery is connected by a connector so that it can be removed when you will not be using the transmitter for a long period of time, or when replacing a discharged battery with a spare battery.

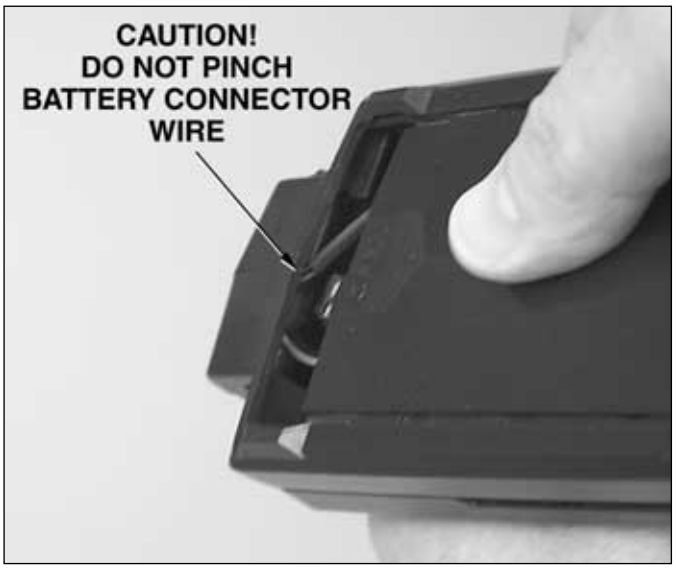

⚠ **CAUTION** - DO NOT pinch the NiCd battery wire when sliding the lid closed. If the wire is damaged, abnormal heating and fire may result.

APPENDIX III
Error Displays

Low Battery Alarm:

- If the transmitter's battery voltage drops below 8.5V an alarm will sound and "**LOW BATTERY**" will be displayed on the LCD screen.

⚠ **CAUTION** The low battery alarm is meant to be a safety feature only. Do NOT operate your radio below 9V and count on the low battery warning to let you know it is time to charge! Always shut your radio off as soon as possible after the low battery warning tone to avoid loss of control.

- ***Alarm tone***: continuous tone.

Backup Error:

- **MEMORY "BACK UP ERROR"** displays on screen if the EEPROM-stored data is lost for any reason. The 3PK does not use a battery to store this data; it is stored in permanent non-volatile memory. However, failures can still occur which cause loss of this memory. If a backup error occurs, immediately stop using the transmitter and send it for service. Do not attempt to continue to use the radio.
- ***Alarm tone***: 9 beeps, pause, repeat.

Model Select Error:

- **EXTERNAL MODEL #** "**SELECT ERROR" ANY KEY** > **M1 SELECT** displays when the following occurs:
  - Model being operated is stored in the CAMPac.
  - Transmitter is turned off, and CAMPac removed.
  - Transmitter is then turned back on.

The transmitter is unable to read the last model used (because it is in the CAMPac), and so it provides a warning that it cannot select the last model memory used and then selects model M1.

- ***Alarm tone:*** 7 beeps, pause, repeat.

CAMPac Error:

- **EXTERNAL MEMORY "ACCESS ERROR"** displays when a problem occurred while copying from or to the CAMPac.
- To stop the alarm, turn off the transmitter. Turn it back on. Repeat the copy attempt to ensure all data was safely copied.
- ***Alarm tone:*** 7 beeps, pause, repeat.

Memory Error:

- **MAIN MEMORY "ACCESS ERROR"** displays when the transmitter is turned on and a problem occurs with accessing a model.
- To stop the alarm, turn off the transmitter. Turn it back on. If the alarm sounds again, send for service. If it does not, the system is ready for use.
- ***Alarm tone:*** 7 beeps, pause, repeat.

Idle-Up Warning:

- **IDLE UP** "**MIX WARNING"** displays if the idle up mix is turned on when the transmitter is turned on.
- To stop the alarm, move the idle-up switch to off.
- ***Alarm tone:*** 7 beeps, pause, repeat.

GLOSSARY and INDEX

3CH: Channel 3 position. See channel 3 assignment. 40

3-channel: transmitter that can send commands to 3 separate channels for model operation.

ABP: Adjustment in ABS. Amount of brake return, how far the braking response is decreased during the pulses. 0 = no return, no ABS action; 100% = completely returned to neutral, no braking at all during pulses. See ABS.....24

ABS: Anti-lock braking system. Simulates full size automobile anti-lock brakes by pulsating the brakes. Length of pulse cycles, amount of brake return (easing off brake), ratio of brake return to full brake on, delay before ABS takes effect, and trigger position where ABS takes effect can all be adjusted.....24

ABSD: ABS delay. See ABS. 24

ACCB: Acceleration, braking. See Throttle Acceleration.....26

ACCF: Acceleration, forward. See Throttle Acceleration. 26

Acceleration: See Throttle Acceleration 26

ACT: Activated. Used in various functions.

Additional Technical Help, Support and Service 4

Adjustable Throttle Limiter: See ATL.....37

Adjuster: Electronic calibration to compensate for minor wear on the radio. 45

Alarm Buzzer: See BUZZ-TONE.....12

ALRM: Total run time prior to desired alarm. See Timer.....30

Application, Export and Reconstruction.....46

AT&SW: Mode choice in Auto-start. Auto-start is activated by throttle trigger or switch. Switch can be assigned in FUNC-SW and used to turn off the Auto-start feature without having to gun the throttle to do so. See AT-START.....28

ATL: Adjustable Throttle Limiter. Feature that adjusts the amount of travel available to the braking side only of the throttle/braking trigger or servo.

Mechanical: stopper that blocks the brake trigger from moving as far away from neutral 50

Electronic: end point adjustment which shortens the total travel to the brake side of the servo 37

ATS: Auto-start Status. Whether auto-start is 'armed' and ready for use or waiting to be 'armed.' See Auto-Start.....28

AT-START/Engine cut: Auto-start function only allows the throttle servo to go to a certain preset point when starting a race. This keeps it from accelerating too hard and spinning or torquing, wasting power. Engine cut shuts engine off with push of a switch by taking the throttle servo to a preset location which closes the carburetor. (Engine cut is not available on models using a single servo to operate throttle and brakes together.) 28

ATV: Adjustable Travel Volume. See EPA 18

Auto-Start: see AT-START 28

Backlash: Term describing the amount of play between gears, or gear mesh. If too loose, the gear can slip, or strip the teeth. Too tight, and excessive wear is caused.

Backlight: Display screen can be lit up, making it easier to read in indoor and other conditions. Backlighting adjustments: contrast, constant on or on with keystroke, length on per keystroke and when lit. See System. 13

Ball Bearing Servos: Servo's output shaft is supported with ball bearings for increased performance and accuracy.

Ball Link: Connection using a ball and a socket that rotates on the ball. Used to connect the servo to a control surface or lever.

BALN: balance. In brake mix, decreases the amount of brake command to either front or rear without adjusting total brake mix, etc. See Brake Mix 42

Base Load Antenna: A rigid, short antenna mounted to the model. Used to replace the longer stock antenna. Not recommended or supported by Futaba.

Battery FailSafe: Notifies user when receiver voltage is low 17

Battery Recycling 46

BEC: Battery Eliminator Circuitry. Allows receiver to draw power from a main battery pack, eliminating the need for (and weight of) a receiver battery.

Binding: What occurs when the friction at a joint is stronger than the linkage.

BK-BL: Brake mixing balance. See Brake Mix. 42

BK-DL: Brake mixing delay. See Brake Mix. 42

BK-RT: Brake mixing rate. See Brake Mix. 42

Boat mode: A menu of features specifically for boat modelers. Includes trigger-brake and tilt mixing. 43

Brake mix: Built in programmable mixing to use channels 2 and 3 for separately adjustable front and rear brakes. 42

BRAKE-MIX: See Brake Mix. 42

Brightness: See Contrast. 13

BRK-EXP: See Exponential Rate. 20

BUZ-TONE: Buzzer tone adjustment. See System. 13

Calibration: See Adjuster 45

CAMPac **©:** Removable memory storage (diskette) to store 10 additional model memories. 5

Carburetor: The part of the engine which controls the speed or throttle setting and lean/rich mixture via setting of the needle valve.

Caring for your NiCd Batteries 49

CH3-Posi: Moves the channel 3 center position or overall position if channel 3 is unassigned to any dials or switches. 40

Changing Wheel Position and Modifying for Left Hand Use 51

Channel: The frequency number used by the transmitter to send signals to the receiver. If 2 or more radios transmit on the same frequency, or channel, glitching will occur in the receiver, due to conflicting signals sent by the two radios. Racing sites should have a frequency control system to ensure that only one radio operates on any given channel at one time. This is usually a board with some type of marker for each channel. If the marker is not available, someone else is using that channel. Do not use your radio unless you are sure you are the only one on the frequency.

Channel: The number of functions your radio can control. Ex: A 3-channel radio has 3 available servo slots used for separate control surfaces or switches. These channels can also be mixed on many radios, for such functions as multi-servo braking.

Channel 1 > 3: In boat mode, mix from steering (rudder) to outboard. See Boat Mode. 43

Channel 3 > 1: In boat mode, mixing from outboard to steering (rudder). See Boat Mode. 43

Channel 3 assignment 40

Charge Jack: The plug receptacle of the switch harness into which the charger is plugged to charge the receiver battery. An expanded scale voltmeter (ESV) can also be plugged into it to check battery voltage between uses. It is advisable to mount the charge jack in an accessible area of the model so an ESV can be used without extensive disassembly.

Charger: Device used to recharge batteries. Usually supplied with the radio if NiCd batteries are included.

CH-EPA: Channel End Point Adjustment. See EPA. 18

CH-REV: Channel Reversing. See Servo Reversing. 18

Color: Color for LED lamp is adjustable. See LED-MODE. 13

Contents and Technical Specifications 5

Contrast: LCD screen contrast. See System. 13

Coreless Motor: In a conventional servo, the motor has a steel core armature wrapped in wire that spins inside the magnets. In a coreless design, the armature uses a thin wire mesh that forms a cup that spins around the outside of the magnet eliminating the heavy steel core. A coreless motor does not have magnets as standard servo motors do, so they have a smoother, more constant, and stronger action. Regular servo motors have either 3 or 5 magnets (poles) which, when the armature is between these, the servo motor is at its weakest.

Count Down Timer: See Timer 30

Count Up Timer: See Timer 30

Curve: In throttle exponential, the "curve" function offers 5 points along the range of the servo, and draws straight lines of response between each point. It is not a true curve, as is exponential, and there are noticeable steps in the responsiveness as each rate of response is entered. See Exponential. 20

CUT OFF: No braking action when trigger is pushed forward. Adjustment within Boat Mode. See Boat Mode. 43

CYC: Adjustment in ABS. Cycle adjustment, sets how rapidly the brakes cycle from full brake applied to ABP and back to full brake applied. See ABS. 24

Cycle: Adjustment in ABS. One complete "pulse" of maximum brake applied to lessened brake. See ABS. 24

D/R2: 2nd steering dual rate. See Steering Dual Rate. 38

DELAY: In brake mix, waits to send command to either front or rear, allowing other to begin braking the car first. See Brake Mix. In ABS, see DLY. 24

Differential. Uneven movement in each direction of a control. For example, differential steering in a 4WD car (see programmable mixing example, p. 40.) or differential braking (see brake mix, p. 42.)

Digital Grip Dial Operation 9

Digital Servo: Servo with a quartz crystal-controlled microprocessor, FET amplifier and specialized lead rather than a standard logic chip and timing components of a standard servo. Sends signals to the servo motor 6 times faster than analog servos. Required for use with HRS receivers.

Digital Trim Operation 9

Digital Trims and Dials: Electronic switches which automatically store their position each time a change is made. Separate memories for each trim and dial exist in each model memory. 9

DIRC-CALL: Direct Select menu setup. Assigns the 6 features to the direct select menu for each selection. 36

Direct Selection Menu: Quick access menu that allows user access to any 6 features with the push of 2 buttons 11

Direct Servo Control (DSC). High-end convenience feature that allows control/adjustment of servo function without sending signal through receiver. Requires optional DSC cord and DSC-compatible receiver such as R113iP, R113F, R123F, R133F. 5

DISP: display only. Transmitter is operating the programming display only and is not transmitting RF to the receiver. 8

Display Settings: See System 13

Display Switch 8

DISPL-SEL: Home screen display settings. See System....13

DLY: Adjustment in ABS. Delay; determines how long the braking is applied before ABS begins to operate. 0 = no delay; 100% = approximately 1.7 seconds full braking before pulsing begins. See ABS. 24

Down Timer: Count-down timer. Counts negatively once desired time is passed (below 0). Runs consecutively until reset with lap reset or change of model selection. See Timer....30

DPAC: Display indication that **CAM**Pac is installed and being read by the transmitter. See Getting to Know the Transmitter....5

D/R: See **Dual Rate**....38

DSC: See Direct Servo Control. 5

DTY: Adjustment in ABS. Cycle duty ratio, sets the proportion of brakes applied full vs. ABP. Setting of +3 provides least time at full brake; -3 provides maximum time at full brake (more likely to skid). See ABS. 24

Dual Brake Servos: See Brake Mix....42

Dual Rate, or Primary Dual Rate: Name of the first rate setting in dual rate function. Decreases the vehicle's steering sensitivity across the entire range. Equivalent of decreasing **brake side** EPA **only** by that percentage. Assigned to grip dial 1 as a default to allow on-the-course adjustments. If grip dial is reassigned, dual rate may still be adjusted on-screen. Dual rate is always active, except when the 2nd dual rate switch is pushed. (3PK's dual rate is the same as the 9Z's AFR and the first rate of dual rate in other aircraft radio models.) See Steering Dual Rate. 38

Dual Rates: Adjustable rates of travel to fine-tune the model's handling. Traditionally, dual rate on a car radio is used to describe a single rate that can be adjusted while driving. Dual rates on aircraft radios, and on the 3PK, provide the user 2 separate amounts of travel available at the push of a switch. See Steering D/R....38

Dual Steering Servos: See Programmable Mixes....40

Duty Ratio: See **DTY** in ABS....24

E11-E20: Model numbering for model memories stored in the optional extended memory **CAM**Pac. See Model Select....14

End Point Adjustment: See EPA. 18

Engine Cut: Moves throttle servo to a preset position which closes the carburetor and shuts off the engine. Not functional with models using a single servo to operate brakes and throttle. See AT-START 28

EPA: Adjustment to the servo's position when full input is given. Used when the mechanical setup in the vehicle does not provide the exact desired amount of steering, or the throttle servo is trying to open the carburetor past wide open, or does not open it far enough....18

Error Messages. 54

ESC Setup for HRS receivers: See MC Setup. 44

ESC: Electronic speed control used to vary electric motor RPM.

Expanded Scale Voltmeter (ESV): Device used to read the battery voltage of the on-board battery pack or transmitter battery pack.

EXPB: Exponential, braking. See Exponential Rate....20

Expert Driver Menus: See Level Selection. 12

EXPF: Exponential, forward throttle. See Exponential Rate. 20

Exponential Rate: Offers servo travel that is not directly proportional to your inputs. When negative exponential is used, control response is milder near neutral, but becomes increasing stronger as travel approaches 100%. Throttle exponential offers 3 separate 'curve' types. 20

EXPS: Exponential, steering. See Exponential Rate....20

FailSafe: A safety feature that moves a servo to a preset position if the signal is lost or interrupted. Please refer to (http://www.futabarc.com/faq/product-faq.html#q102) for more information. Additionally, **Battery FailSafe** is a safety feature that brings the throttle servo down to idle as a warning that the receiver battery's voltage is getting dangerously low. 17

F.A.Q.: Frequently asked questions. www.futabarc.com/faq/faq-3pk.html

Field Charger: A fast battery charger designed to work from a 12-volt power source, such as a car battery. Usually takes advantage of peak charging capability.

FM: Frequency Modulation. This describes the type of transmission of radio signal from transmitter to receiver. PPM (commonly called simply "FM"), PCM1024, and HRS all transmit with the FM type.

Frequency Control. The FCC has allowed the 75mHz band (75.410 - 75.990) to be used for R/C ground model operations, and the 27mHz band (26.995 - 27.255) for ground and air models. This band is divided up into many different channels on which you can choose a radio system. You should be aware that certain areas have frequencies in which there is pager and other interference. This is why it is always a wise move to check with your local hobby shop to find out any channels that may be troublesome in the area. The FCC has allocated the 50mHz band (50.800 - 50.980) only to Amateur HAM license holders for R/C use (and only at 1W maximum power output.)

Frequently Asked Questions webpage: www.futabarc.com/faq/faq-3pk.html

FUNC-DIAL: See Function Assignment. 34

FUNC-SW: See Function Assignment. 34

Function: A programming option within the radio, such as exponential, brake mixing, etc.

Function Assignment: assigns functions to the 3 dials, 3 trimmers, and 3 switches on the radio. Note: upper right on home screen displays assignments to dials 1-3 and trims 1-3. 34

Futaba Service Center:.....4

FWD-TYP: Adjustment within exponential, defines what expo curve type for forward acceleration. See Exponential. .20

Getting to Know the Transmitter.....8

Glow Plug: The heat source for igniting the fuel/air mixture in the engine. When starting the engine a battery is used to heat the filament. After the engine is running, the battery can be removed. The wire filament inside the plug is kept hot by the "explosions" in the engine's cylinder.

Help 4

High Response System: See HRS 7, 48

HOLD: In FailSafe, instruction to receiver to maintain the last instruction provided by the transmitter before clean signal was lost. See FailSafe. 17

Home screen display settings: See DISP-SEL.....13

HRS: High Response System. Modulation that provides input to receiver 3 times faster than standard PPM (often called FM) data transmission. MUST USE only 6.0V battery packs and all digital servos. 7, 48

Idle-up: Moves throttle servo to a preset position, a higher idle, to aid in starting the engine. 27

IDLUP: Idle-up. See Idle-up.....27

INH: Inhibited. Function is electronically prevented from working and will not operate until changed to another setting.

Installation 10

KEY-ON: The display back-lights whenever a programming key is pressed. Length of time is adjustable with LHT-TIME. See System. 13

LAP: Current lap number. See Timer. 30

LAP-LIST: See Lap List.....31

Lap List: Lists all stored laps for this model. Laps are stored by setting up Timer to a Lap Memory Timer, setting up a lap start/stop in the functions screen, and then starting/running the timer while driving the vehicle. Note that lap list is NOT reset when a model memory is reset. It must be reset manually (see instructions). 31

Lap Memory Timer: Acts as a count-up timer, storing each lap and starting a new lap each time button is pressed, while also maintaining a total run time count-up alarm, with a pre-alarm warning time. Stores up to 100 laps, visible on LAP-LIST (see p. 31). Has a 3-second safety window where button press does not reset the lap. See Timer. 30

LED-MODE: LED pilot lamp color. See System. 13

Lap Navigate Timer: Count-up timer which alarms at a set total run time, but also has a navigation alarm which alarms every set interval (desired lap time), and then restarts the navigation alarm countdown on each button press or upon passing each navigation alarm time. (Example: 4 minute track race, desired lap time is 30 seconds. Nav alarm goes off if lap counter is not pressed before 30 seconds, then again after another 30 seconds, and so on until 4 minutes.) Great for practice-runs and working toward a target track time. Does NOT store individual lap times. See Timer. 30

LAP RESET: Switch assignment required to end timers and prepare them to be used again without having to go to timer programming to do so. See Timer. 30

LAP START: Switch assignment required to indicate start/stop, or the end of each lap in lap navigate and lap memory timers. See Timer. 30

Left Hand Use 51

Level Selection: Allows user to select one of three levels of complexity/completeness of the functions displayed. Provides a new user only the most frequently needed functions; a race driver those functions most frequently used for racing; and an expert user all the functionality of the radio. 12

LEVEL-SEL: See Level Selection. 12

LHT-MODE: LCD backlighting mode. See System. 13

LHT-TIME: LCD backlighting time period. See System. 13

Liability and Warranty 46

LV1 functions: New User level functions. Most commonly used functions of the radio in a single menu for easy access without extra clutter and confusion. See Level Selection 12

LV2 functions: Race-Ready User level functions. LV1 functions set together with most common racing adjustments in a pair of menus for easy access without extra clutter and confusion. See Level Selection 12

LV3 functions: Expert user level functions. All features available to the radio in 3 easily-accessed menus. See Level Selection.....12

M1-M10: Model numbering for model memories stored within the transmitter's memory, not in the optional **CAM**Pac.

Mandatory Procedures for using with HRS receivers 5, 48

Master: In programmable mixing, the channel the other servo will follow. In brake mixing, the throttle channel's braking side. See Programmable Mixes 40

MC Setup (for HRS receivers only): HRS provides a very rapid frame rate – faster than most non-Futaba ESCs are designed to read/comprehend. Therefore, most non-Futaba ESCs' self-setup procedures are unable to complete the self-setups and self-tests properly at this high frame rate. The MC Setup function, along with a special cord (not included), allow the receiver to communicate with the ESC temporarily at a slower frame rate so the ESC can properly set up and be prepared to operate properly in HRS 44

MC-SETUP: See MC Setup. 44

MDL-COPY: See Model Copy. 33

MDL-NAME: See Model Name. 15

MDL-RES: See Model Reset. 32

MDL-SEL: See Model Selection. 14

Meaning of Special Markings 47

Mechanical ATL 50

Menu Complexity: See Level Selection 12

Menu Level: See Level Selection 12

Menus: 3PK offers two separate menu types – the Direct Select menu which offers access to your 6 favorite functions with just 2 buttons; all of the features of the radio in 3 levels of complexity (Level 1, 2, 3). 11

Metal Gears: One or more drive gears within a servo that are made of one or multiple metal types. Metal gears tend to wear more rapidly than nylon gears when in the same installation, and so require more frequent service to maintain optimum accuracy; however, metal gears are more durable in the case of severe vibration, flutter, or physical shock.

mHz (Megahertz = million cycles per second): The unit of radio frequency. 75 mHz are surface frequencies; 72 mHz are air frequencies; 27 mHz and 50 mHz can be used for either ground or air applications. Note: Use of the 50 mHz (ham radio) band requires an FCC license. The 3PK is not available on 50 mHz.

Mix Mode: Option in programmable mixing. Selects whether slave moves exactly based upon the master channel's control movement (unmixed) or the master channel's servo movements after any mixing (mixed). In brake mixing, determines whether front brakes respond based solely on trigger position (UNMIX), or whether other functions' adjustments to rear brakes also affect front brakes (MIXED). See Programmable Mixes. 40

Mixing: Allows a single input to control the operation of two or more servos that are plugged into separate channels. Simplifies more involved setups. For example, brake mixing, which utilizes 2 servos, one for front wheel braking and one for rear wheel braking, allows different amounts of braking to front and rear when the driver simply gives brake with the trigger. 3PK has 2 free programmable mixes which could be used to set up 4-wheel steering, separate front and rear steering with adjustable acumen, etc. See Programmable Mixes. 40

MOD-MODE: Function used to select modulation for each separate model memory. 16

MODE: Setting for this function at this time – typically inhibited or active. More extensive choices are available in some functions.

Model Copy: Makes a back up or duplicate copy of all model data. 33

Model Name: Provides a 10-character name for the model for easily selecting the right model memory. 15

Model Reset: Resets nearly all data associated with the currently-selected model memory. 32

Model Selection: Chooses a model memory to set up or use. 14

Modulation: The method or "language" used to transmit data to the receiver. 3PK supports PPM (commonly called FM), PCM1024, and HRS. See MOD-MODE. 16

Module: A removable/replaceable plug-in unit used in most complex computer radios, containing all frequency control equipment, including the crystal and all tuned components. Changing channels or bands on a modular radio requires only changing module. Changing crystals WITHIN a module to change the channel of the module itself is against FCC regulation and is not recommended. To use your transmitter on a different channel you simply purchase another module on that other channel and the radio is now properly tuned and safe and easy to use on that other channel as well. The 3PK uses a new, specialized module, the PK, which can transmit not only in PPM and PCM but also HRS.....7

MXMD: Mix mode. See mix mode, Programmable Mixes 40

Narrow-Band: A radio with a 20 KHz band width. All Futaba radios produced 1992 or later and all Futaba FM, HRS and PCM radios ever produced are narrow band.

Navigate Timer: See Timer.....30

New User Menu: See Level Selection 12

NiCd: NiCd, Nickel Cadmium battery. Rechargeable batteries that are typically used as power for radio transmitters and receivers. See Caring for your NiCd Batteries. 49

Nitro (Nitromethane): A fuel additive that increases a model engine's ability to idle low and improves high speed performance. Ideal nitro content varies from engine to engine. Refer to the engine manufacturer's instructions for best results. Nitro content in fuel is indicated by what percent of the fuel volume is nitro.

No.: Number. In timer, number of laps stored and ready to display. See Timer. 30

NVALM: Number of times the navigation alarm went off, indicating you exceeded your desired run time. See Timer. 30

Nylon gears: Drive gears within a servo made of nylon. Nylon gears show slower wear than metal gears, but are more prone to failure due to severe vibration or physical shock to the servo.

Offset: Option in programmable mixing. Amount off center to adjust the mix. See Programmable Mixes. 40

PCM (Pulse Code Modulation): PCM systems use digitally encoded signals to minimize interference and provide today's most advanced R/C control. See MOD-MODE. 16

Peak Charger: This type of charger will eliminate the guesswork. When the battery is fully charged (peaked), the charger reverts to a maintenance charge rate, which will not damage the pack.

Peak: This is the point at which a battery will no longer accept a charge, and converts the energy to heat. This is damaging to the battery pack, and potentially hazardous.

PM1-A: Programmable mix 1, rate A adjustment: See Programmable Mixes. 40

PM1-B: Programmable mix 1, rate B adjustment: See programmable Mixes. 40

PM2-A: Programmable mix 2, rate A adjustment: See Programmable Mixes. 40

PM2-B: Programmable mix 2, rate B adjustment: See Programmable Mixes. 40

Pot Calibration: See Adjuster.....45

PPM: Pulse Position Modulation. Commonly referred to as "FM". Modulation of "FM" receivers such as R133F. 16

PRAL: Pre-alarm, desired time is approaching, beeps once every second until alarm time is reached. See Timer. 30

PRG-MIX: See Programmable Mixes.....40

Programmable Mixes: Function that instructs a second servo to operate in response to the instructions given to a first servo. 3PK includes 2 programmable mixes which are open to the user completely to set up as needed.....40

PRST: Preset. In auto-start, throttle servo position. Preset is a "true" preset – it is not a mix or a portion of the EPA. It is truly a command to move the servo to a set position regardless of other inputs, including trigger. See Auto-Start. 28

PS: Push Button Switch. Also called switch, or SW. PS1 = SW1 Assigned in FUNC-SW. 34

Quick Access Menu: See Direct Selection. 11

Race Ready Menus: See Level Selection. 12

Racing Timer: Model-specific timer, with four types – up, down, lap memory, and lap navigate. See Timer. 30

RATE: In brake mix, proportion of rear brake input to also be commanded to front brakes. See Brake Mix. 42

RDY: Trigger-ready state. If set to ready, timer begins with trigger pull, doesn't require lap start button to be pressed to begin timer; however, lap button still needs to be pressed to end/store each lap. Trigger activity has no effect after starting the timer. See Timer. 30

Receiver (Rx): The radio unit that receives the transmitter signal and relays the control to the servos. This is somewhat similar to the radio you may have in your family automobile, except the radio in the model perceives commands from the transmitter, while the radio in your car perceives music from the radio station.....7

Return: Movement of the steering servo from the turned position back to neutral.

RF: Display reading indicating transmitter is transmitting signal to the receiver. 8

RST: Timer reset. Stops running timer, resets run timer, stores last lap to memory. See Timer.....30

RUN: Timer is currently running, and displays total run timer, tracking total race time regardless of individual laps. See Timer. 30

Safety Precautions (DO NOT operate without reading).....48

SBT1: subtrim, steering. See Subtrim. 22

SBT2: subtrim, throttle. See Subtrim. 22

SBT3: subtrim, channel 3. See Subtrim. 22

Second Dual Rate: A second while-driving rate of servo response, available with the push of a switch, meant to be used to temporarily have more/less servo travel available without having to readjust the dual rate adjustment dial proportional to the EPA **not the primary dual rate**. Examples: getting away from walls, crashes, a single hairpin turn on an otherwise non-technical track. See Steering Dual Rate. 38

Service Center 4

Servo Display: Displays the exact inputs being given to each servo. Helpful in troubleshooting, testing, experimenting with new features, and beginning model setups prior to the model's completion. 39

SERVO Function: See Servo Display.....39

Servo Output Arm: The removable arm or wheel which bolts to the output shaft of a servo and connects to the pushrod.

Servo Reversing: Causes servo to respond in exactly the opposite direction of its normal rotation. 18

Servo: The electro-mechanical device which moves the steering angle or throttle according to commands from the receiver. The radio device which does the physical work inside the model.

SET: In FailSafe, instruction to receiver to move servos to a preset position if FailSafe activates. See FailSafe. 17

Skill Level: See Level Selection. 12

Slave: Variable in programmable mixing. The channel that follows the master channel. In brake mixing, channel 3 for the front brakes. See Programmable Mixes. 40

Slop: Unwanted, excessive free movement in a control system. Often caused by a hole in a servo arm or control horn that is too big for the rod.

SPDR: Speed steering, on return. See Speed Limiter 23

SPDT: Speed, steering, in turn. See Speed Limiter 23

SPDT: Throttle servo speed. See Speed Limiter 23

Speed Limiter: Slows the servo's overall movement to avoid wheel spin, etc. 23

SRV-VIEW: Servo display (SERVO function) shown on home screen. See System, SERVO. 13, 39

ST-DR: See Steering Dual Rate. 38

Steering dual rate (d/r): Adjustable rates of travel to fine-tune the model's handling. Traditionally, dual rate on a car radio is used to describe a single rate that can be adjusted while driving. Dual rates on aircraft radios, and on the 3PK, provide the user 2 separate amounts of travel available at the push of a switch. 38

ST-EXP: See Exponential Rate. 20

STM: Adjustment in ABS. Steering mix setup, controls when the ABS is triggered based upon amount of steering input. Designed to decrease skidding when vehicle is in a turn, and minimize spin outs. Can be set to off (steering has no effect on ABS), normal (ABS operates only when steering is turned X% or less) or end (ABS operates only if steering is turned X% or more). See ABS. 24

STP: Stop. Timer is stopped. See Timer. 30

ST-SPEED: Speed function for steering servo. See Speed Limiter. 23

ST-TR: Steering trim. See Digital Trims. 9

Sub-Trim: This is a trim function on many computer radios, allowing fine tuning during set-up, and still allowing the full regular trim adjustability with the digital trims when in use. Sub-trim adjusts the whole travel of the servo off center; digital trims just adjust the center toward one end or the other, creating slightly more/less travel for each side. 22

Support and Service: 4

SW: Switch. In Auto-start means switch only. Auto-start is inhibited and engine cut is now available to be operated from a switch, which must be assigned in FUNC-SW. See also PS. 34

System Settings: Sub-menu which adjusts various system-wide settings including backlighting, buzzer tone, color of LED, items displayed on home screen, screen contrast. 13

System Timer: See Timer. 30

SYSTEM: See System Settings. 13

Technical Help: 4

TGP: Trigger Point, sets at what point function will be activated. In ABS, ABS does not respond if less brake is provided than the trigger point setting. See ABS. 24

TH-ATL (Throttle - Adjustable Throttle Limiter): See ATL. 37

TH-EXP: See Exponential Rate. 20

THR-ACCEL: See throttle acceleration. 26

Throttle Acceleration: Makes up for free-play in nitro vehicle linkages around neutral by moving the servo significantly when the stick is moved off neutral, then having a normal linear response for the rest of the travel. 26

Throttle ATL: See ATL. 37

THSPD: Speed, throttle. See Speed Limiter 23

TH-SPEED: Speed function for throttle servo. See Speed Limiter 23

TH-TR: Throttle trim. See Digital Trims. 9

Tilt Mixing: Programmable mix used for boats, mixing motor tilt to steering and steering to motor tilt. 43

TIME: Current running lap time. See Timer. 30

Timer: Function used to help track driver performance in various ways, including lap tracking, run time compared to a preset value, count up and count down timers, as well as a system-wide timer. 30

TLT13: Tilt mixing channel 1 > 3. See Boat Mode. 43

TLT31: Tilt mixing channel 3 > 1. See Boat Mode. 43

Tone: See BUZ-TONE. 13

Total Timer: System timer, does not reset/change when model selection is changed. Runs consecutively each time transmitter is turned on, storing total use time until it is reset. 30

Traction Control: See Speed Limiter 23

Transmitter (Tx): The hand-held radio controller. This is the unit that sends out the commands that you input.

Transmitter Controls and Switch Identification/Assignments 2

TRG-BRK: Trigger-Brake operation. Shuts off brake side of servo movement for boats without braking/reverse. See Boat Mode. 43

Trigger Brake: In boat mode, determines if braking side of trigger has any effect or not. See Boat Mode. 43

Trim Lever: See Digital Trims. 9

Trim, in programmable mixing: Sets whether the slave channel is moved based upon the master channel's trim (ON) or not (OFF). See Programmable Mixes. 40

TRMS: Steering trim. See Digital Trims. 9

TRMT: Throttle trim. See Digital Trims. 9

Twin Brake Servos: See Brake Mix 42

Twin Steering Servos: See Programmable Mixes 40

2-Button Access: See Direct Selection. 11

Turn: Movement of the steering servo away from neutral to desired position.

Up Timer: Regular stop watch timer. Counts up from 0 until stopped. Runs consecutively until reset with lap reset or change of model selection. See Timer. 30

User Level: See Level Selection. 12

User Name: System-wide setting to identify the radio's owner. 15

VTR: Variable Trace Rate is a type of throttle exponential, which is basically a 3-point line, where one point may be raised or lowered, forming two straight lines, and where the user can select the point where the line breaks into two. See Exponential. 20

Webpage: www.futabarc.com/faq/faq-3pk.html

Wheel Tension Adjustment: 50

QUICK SET-UP FOR NITRO ENGINES

Set-up Issue	Function to Use
Nitro engine is difficult to start.	Use idle-up to increase the idle for starting only. (**IDLE-UP**)
Nitro boat engine is difficult to shut off.	Use engine cut (part of auto-start) to shut engine off at end of run. (**AT-START**)
Wheels spin on starts only, not when accelerating from turns.	Use auto-start function to slow throttle servo response on starts. (**AT-START**)
Nitro engine coughs/stalls when full throttle is applied quickly but not when applied slowly.	Decrease forward side of throttle servo speed. (**TH-SPEED**)
Nitro engine is too responsive to throttle inputs around idle.	Use throttle exponential to create an even throttle response at all speeds. (**TH-EXP**)
Wheels spin whenever accelerating rapidly.	Decrease the throttle servo forward speed. (**TH-SPEED**)
Nitro engine has little/no response when first applying throttle/brake due to 'slop' in linkage.	Use throttle acceleration to jump the throttle servo past the slop. (**TH-ACCEL**)

LAYOUT REMINDER GUIDE

(Make copies to track each model's assignments.)

Note that DT1-3 and DL1-3 are always displayed onscreen. (See **FUNC-DIAL**, pp. 34-35.)

Set-up Information

Date _____

Model _____ **Modulation** _____

Model's # _____ **In CAMPac #** _____ **Frequency** _____

Control	Assigned Function
PS1	
PS2	
PS3	
DT1	
DT2	
DT3	
DL1	
DL2	
DL3	

QUICK START GUIDE TO MOST COMMONLY USED FEATURES

HINT: The direct selection menu provides fast access to most frequently used functions. To access the direct menu, simply turn on the display and press **DIR**. Then press the correct button for the function you want to use (see the onscreen map). The button with no number exits the direct selection menu.

NOTE: Features are stored in different locations between the 3 menu systems for easiest use with that level model. All quick start steps assume that you are following these instructions sequentially. This quick start guide assumes you are starting from a totally blank model setting, and are in the highest-complexity setting, **LV 3**, *until changed within the guide. For more details on each function, see the page # referenced in each step.*

QUICK START GUIDE:	STEPS:	INPUTS for EXAMPLE:
Prepare your model.	Install all servos, switches, and receivers per your model's instructions. Charge transmitter and receiver batteries at least 18 hours prior to first use.	
Test proper transmitter function. See Page 9.		
Select a different model memory. (Example: Change from model 1 to model 3.) (See p. 14.)	Open menu system, locate and select **MDL-SEL**.	UP UP to **MENU 2**. SEL to select this menu. UP 6 steps to **MDL-SEL**. SEL to open.
	Select desired model.	DN DN to **M3**.
	Confirm the change.	±/✓ to accept.
	Close menus.	END END END
Change menu level to match the complexity needed for this model and your comfort level with the radio's features. (Example: set to "new user" level, **LV1**.) (See p. 12.)	Open menu system, locate and select **LEVEL-SEL**.	UP to **MENU 3.** SEL to select this menu. DN DN DN DN to **LEVEL-SEL**. SEL to open.
	Select desired level.	DN to **LV1**.
	Confirm the change.	±/✓ to accept.
	Close menus.	END END END
Change modulation, if needed. (Example: change from HRS to PCM for use with R113iP receiver.) (See p. 16.)	Open menu system, locate and select **MOD-MODE**.	UP to **MENU1**. SEL to select this menu. DN 6 steps to **MOD-MODE**. SEL
	Select desired modulation.	DN to **PCM**.
	Confirm the change.	±/✓ to accept.
	Close menus. Turn Tx off/on to take effect.	END END END Transmitter off/on.
Set up servo centers, linkages.	Turn on receiver, center servos, hook up linkages.	
Reverse any servos needed. (Example: When right wheel is applied, wheels turn left. Reverse steering servo.) (See p. 18.)	Open menu system, locate and select **CH-REV**.	UP to **MENU1**. SEL to select this menu. SEL
	Select desired servo. Reverse that servo. Close menus.	UP UP UP to **ST**. − to **REV.** END END END
End point adjustment. (Example: Steering servo is binding, moving farther to each side than the linkage can move. Decrease steering EPA to 90% on each side.) (See p. 18.)	Open menu system, locate and select **CH-EPA**.	UP to **MENU1**. SEL to select this menu. DN DN SEL
	Select desired channel. Set EPA as desired. Close menus.	DN to **ST-RGHT**. − to **90%.** UP to **ST-LEFT.** − to **90%** END END END
Set up FailSafe (PCM/HRS only) (Example: To shut off engine in event of lost signal.) (See p. 17.)	Open menu system, locate and select **FAIL-SAFE**.	UP to **MENU1**. SEL to select this menu. UP UP UP UP UP to FailSafe SEL
Activate battery FailSafe (PCM/HRS only) (Example: To take engine to idle if receiver battery drops below a set point.) (See p. 17.)	Select channel to put to a preset position. Activate battery failsafe response. Close menus.	DN to **TH**. Hold trigger in desired position ±/✓ to store. DN DN to **MODE.** + to **ON.** END END END

Interested in exploring more of what the 3PK has to offer? Open the front cover for a directory of features, or open this rear cover for quick set-up tips for nitro engines and when to use which feature!

This is not a toy. Always read all precautions and instructions prior to operating this electronic device.