4PM

2.4GHz T-FHSS Super Response SR

2.4GHz T-FHSS Super Response SR | 2.4GHz T-FHSS Telemetry System | 2.4GHz S-FHSS

SHORT MANUAL

Detailed function explanation

This manual is a simplified version. Details of the function are not described.

Refer to country distributor WEB for detailed function explanation.

http://www.rc.futaba.co.jp/english (English)

CE

Futaba®

1M23N34702

Digital Proportional R/C System

INTRODUCTION

Thank you for purchasing a Futaba T-FHSS SR 2.4GHz* 4PM digital proportional R/C system. This system is extremely versatile and may be used by beginners and pros alike. In order for you to make the best use of your system and to fly safely, please read this manual carefully. If you have any difficulties while using your system, please consult the manual, our online Frequently Asked Questions (on the web pages referenced below), your hobby dealer.

Due to unforeseen changes in production procedures, the information contained in this manual is subject to change without notice.

http://www.rc.futaba.co.jp/english

Application, Export, and Modification

1. This product is only designed for use with radio control models. Use of the product described in this instruction manual is limited to radio control models.

2. Exportation precautions:

(a) When this product is exported, it cannot be used where prohibited by the laws governing radio waves of the destination country.

(b) Use of this product with other than models may be restricted by Export and Trade Control Regulations.

3. Modification, adjustment, and replacement of parts: Futaba is not responsible for unauthorized modification, adjustment, or replacement of parts on this product.

OUTSIDE NORTH AMERICA

Please contact the Futaba importer in your region of the world to assist you with any questions, problems or service needs. Please recognize that all information in this manual, and all support availability, is based upon the systems sold in North America only. Products purchased elsewhere may vary. Always contact your region's support center for assistance.

Compliance Information Statement (for U.S.A.)

This device complies with part 15 of the FCC Rules. Operation is subject to the following two conditions:

(1) This device may not cause harmful interference, and (2) This device must accept any interference received, including interference that may cause undesired operation.

(3)RF Radiation Exposure Statement (For T4PM)

This equipment complies with FCC radiation exposure limits set forth for an uncontrolled environment. This transmitter must not be co-located or operating in conjunction with any other antenna or transmitter.

RF Radiation Exposure Statement (For R304SB / R304SB-E / R314SB / R314SB-E / R334SBS / R334SBS-E)

This equipment complies with FCC radiation exposure limits set forth for an uncontrolled environment. This equipment should be installed and operated with minimum distance 20cm between the radiator & your body.

The responsible party for the compliance of this device is:

Futaba Service Center

2681 Wall Triana Hwy Huntsville, AL 35824, U.S.A.

TEL 1-256-461-9399 or E-mail: service@futabaUSA.com

CAUTION:

To assure continued FCC compliance:

Any changes or modifications not expressly approved by the grantee of this device could void the user's authority to operate the equipment.

Compliance Information Statement (for Canada)

This device complies with Industry Canada license-exempt RSS standard(s). Operation is subject to the following two conditions: (1) this device may not cause interference, and (2) this device must accept any interference, including interference that may cause undesired operation of the device. This equipment complies with IC radiation exposure limits set forth for an uncontrolled environment. This transmitter must not be co-located or operating in conjunction with any other antenna or transmitter.

French: Cet appareil radio est conforme au CNR-247 d'Industrie Canada. L'utilisation de ce dispositifest autorisée seulement aux deux conditions suivantes : (1) il ne doit pas produire de brouillage, et (2) l'utilisateur du dispositif doit être prêt à accepter tout brouillage radioélectrique reçu, même sice brouillage est susceptible de compromettre le fonctionnement du dispositif. Cet équipement est conforme aux limites d'exposition aux rayonnements IC établies pour un environnement non contrôlé.

Cet équipement est conforme aux limites d'exposition aux rayonnements IC établies pour un environnement non contrôlé. Cet émetteur ne doit pas être co-situé ou fonctionner conjointement avec une autre antenne ou émetteur.

Declaration of Conformity (for EU)

Hereby, Futaba Corporation declares that the radio equipment type is in compliance with Directive 2014/53/EU.

The full text of the EU declaration of conformity is available at the following internet address:

http://www.rc.futaba.co.jp/english/dl/declarations.html

Table Of Contents

For Your Safety As Well As That Of Others.....7

Explanation Of Symbols.....7
2.4GHz System Precautions.....7
Receiver System Precautions.....7
Operation Precautions.....8
NiMH / NiCd / LiFe Battery Handling Precautions.....9
Storage And Disposal Precautions.....9
Other Precautions.....10

Before Using 11

Features.....11
Set Contents.....13
Transmitter T4PM.....14
- Nomenclature.....14
- Battery Replacement Method (4 AA Size Batteries).....15
- When Using The Optional Battery.....16
- Power Switch & Key Operation.....18
- Display When Power Switch Is Turned On.....18
- Power Off Forgotten Alarm.....19
- Steering Wheel And Throttle Trigger Operation.....19
- Digital Trim Operation.....20
- Mechanical ATL Adjustment.....20
- Wheel & Trigger Tension Adjustment.....21
- Trigger Slide Adjustment.....21

About Transmitter Antenna And Receiver.....22
- About The Transmitter Antenna.....22
- Receiver Terminology.....22
- Receiver Installation.....23

Installation 24

Receiver And Servo Connections.....24
Installation Safety Precautions.....35

Initial Set-Up 28

Preparations (Transmitter).....28

Receiver System Check (RECEIVER) 28
Receiver System Change & How To Link 29
How to set the SR mode Channel.....33
Throttle Mode Check.....34
Trims Initial Set-Up.....34

Function Map 36

Operation Of Screen 36

Calling The Menu Screen.....36
Selecting Items On The Menu Screen 37
Value Of Each Function And Changing The Set Value 37
Basic Menu Japanese Katakana Character Display 38

Functions 39

System Functions "SYSTEM" 39

Liquid crystal screen contrast adjustment
Liquid crystal screen backlighting display mode setup
Backlight display time setup
Backlight brightness setup
Battery type setting
Buzzer sound tone adjustment
The power off forgotten alarm setting
Item which displays the basic menu screen in katakana characters for Japanese use
HOME screen display mode setting

Servo Reverse "REVERSE" 43

Servo operation reversing

Subtrim "SUBTRIM" 44

Servo center position fine adjustment

End Point Adjuster "END POINT" 45

End point adjustment

Exponential Adjustment "EXP".....48

Steering operation curve / Throttle curve adjustment.

Servo Speed "SPEED" 51

Steering/ Throttle servo delay adjustment

Throttle Mode "TH MODE".....54

Throttle Servo Neutral Position “SXNT”
Throttle servo forward and brake operation proportion setting

Throttle Acceleration "TH ACCEL" 55

Function which adjusts the movement characteristic from the throttle neutral position

Steering Dual Rate/ Throttle ATL "D/R ATL".....57
Steering D/R, Throttle ATL Rate
Channel 3/4 "CH3/CH4" 58
Channel 3/4 Position
Model Selection "SELECT" 59
Model memory call
Model Name "MDL NAME" 60
Model memory name & User name, set/modify
Model Copy "COPY".....61
Model memory copy.
Model Reset "RESET".....62
Model memory reset
Data Transfer "MDL TRANS".....63
The T4PM model memory data to another T4PM
Fail-safe Function "FAIL SAFE".....65
Fail-safe, battery fail-safe function
Select Trim Dial Function "TRIM DIAL" 67
Selection of functions operated by digital trim and dial
Select Switch Function "SWITCH" 69
Selection of functions operated by switch
Adjuster "ADJUSTER".....71
Steering wheel and throttle trigger correction
Infomation "INFO".....73
Update the T4PM
Software Update.....74
Update the T4PM
Other Functions.....75
Refer to country distributor WEB for detailed function explanation.

Reference 76

Ratings 76
Warning Displays 77
Optional Parts 78
When Using Four Dry Batteries 80
Warranty & Repair Service (In U.S.A) 81

Use this product in a safe manner. Please observe the following safety precautions at all times.

Explanation Of Symbols

For safety's sake, pay special attention whenever you see the marks shown here.

Symbols	Explanation
⚠ Danger	Indicates a procedure which could lead to a dangerous situation and may cause death or serious injury if ignored and not performed properly.
⚠ Warning	Indicates procedures which may lead to dangerous situations and could cause death or serious injury as well as superficial injury and physical damage.
⚠ Caution	Indicates procedures that may not cause serious injury, but could lead to physical damage.

Symbols: ⃠ : Prohibited ❗ : Mandatory

2.4GHz System Precautions

⚠Warning

⃠ Special attention should be paid before turning on the system while other cars are running or other airplanes are flying because the 2.4GHz RC system could potentially affect them.

❗ Be sure to set the Fail-safe function.

Receiver Mode Precautions

⚠Caution

❗ Be sure to use the T4PM receiver setting and the servo to be used under predetermined conditions.

Under other conditions, the set will not operate, or the specified performance will not be displayed even if it operates. In addition, it may cause servo trouble. Futaba will not be responsible for problems caused by the use of other than genuine Futaba parts. Use the parts specified in the instruction manual and catalog.

System	Response / SR node	Usable servos
T-FHSS SR	SR mode channel: ON	- SR mode of Futaba SR compatible servo. (See page 79 for current listings.)
	SR mode channel: OFF	- Normal mode of Futaba SR compatible servo. - Futaba digital servo.
T-FHSS	HI-SPEED mode	- Normal mode of Futaba SR compatible servo. - Futaba digital servo.
	NORMAL mode	Futaba all servo. (Normal mode of Futaba SR compatible servo.)
S-FHSS	HI-SPEED mode	- Normal mode of Futaba SR compatible servo. - Futaba digital servo.
	NORMAL mode	- Futaba all servo. (Normal mode of Futaba SR compatible servo.)

Receiver battery: Matched to the ratings of the receiver and connected servo (dry cell battery cannot be used).

In addition, the FSU Fail-safe Unit cannot be used because the system is different. Use the fail-safe function of the transmitter. (Refer to page 65.)

⚠ Warning

⊘ Do not operate outdoors on rainy days, run through puddles of water or use when visibility is limited.

Should any type of moisture (water or snow) enter any component of the system, erratic operation and loss of control may occur.

⊘ Do not operate in the following places.

-Near other sites where other radio control activity may occur.
-Near people or roads.
-On any pond when passenger boats are present.
-Near high tension power lines or communication broadcasting antennas.

Interference could cause loss of control. Improper installation of your Radio Control System in your model could result in serious injury.

⊘ Do not operate this R/C system when you are tired, not feeling well or under the influence of alcohol or drugs.

Your judgment is impaired and could result in a dangerous situation that may cause serious injury to yourself as well as others.

⊘ Do not touch the engine, motor, speed control or any part of the model that will generate heat while the model is operating or immediately after its use.

These parts may be very hot and can cause serious burns.

❗ Always perform an operating range check prior to use.

Problems with the radio control system as well as improper installation in a model could cause loss of control.

(Simple range test method)

Have a friend hold the model, or clamp it down or place it where the wheels or prop cannot come in contact with any object. Walk away and check to see if the servos follow the movement of the controls on the transmitter. Should you notice any abnormal operation, do not operate the model. Also check to be sure the model memory matches the model in use.

❗ Turning on the power switches.
Always check the throttle trigger on the transmitter to be sure it is at the neutral position.

1. Turn on the transmitter power switch.
2. Turn on the receiver or speed control power switch.

Turning off the power switches

Always be sure the engine is not running or the motor is stopped.

1. Turn off the receiver or speed control power switch.
2. Then turn off the transmitter power switch.

If the power switches are turned off in the opposite order, the model may unexpectedly run out of control and cause a very dangerous situation.

❗ When making adjustments to the model, do so with the engine not running or the motor disconnected.

You may unexpectedly lose control and create a dangerous situation.

❗ Before running (cruising), check the fail-safe function.

Check Method;

Before starting the engine, check the fail-safe function as follows:

1) Turn on the transmitter and receiver power switches.

2) Wait at least one minute, then turn off the transmitter power switch. (The transmitter automatically transfers the fail-safe data to the receiver every minute.)

3) Check if the fail-safe function moves the servos to the preset position when reception fails.

The fail-safe function is a safety feature that minimizes set damage by moving the servos to a preset position when reception fails. However, if set to a dangerous position, it has the opposite effect. When the reverse function was used to change the operating direction of a servo, the fail-safe function must be reset.
Setting example: Throttle idle or brake position

NiMH / NiCd / LiFe Battery Handling Precautions

(Only when NiMH / NiCd / LiFe batteries are used)

⚠ Warning

⊘ Never plug the charger into an outlet of other than the indicated voltage.

Plugging the charger into the wrong outlet could result in an explosion or fire.

⊘ Never insert or remove the charger while your hands are wet.

You may get an electric shock.

⊘ Do not use the T4PM transmitter's battery as the receiver's battery.

Since the transmitter's battery has an overload protection circuit, the output power will be shut down when the high current load is applied. This may result in runaway or fatal crash.

⊘ Always check to be sure your batteries have been charged prior to operating the model.

Should the battery go dead while the model is operating, loss of control will occur and create a very dangerous situation.

❗ To recharge the transmitter battery, use the special charger made for this purpose.

Overcharging could cause the battery to overheat, leak or explode. This may lead to fire, burns, loss of sight and many other types of injuries.

⚠ Caution

⊘ Do not use commercial AA size NiCd and NiMH batteries.

Quick charging may cause the battery contacts to overheat and damage the battery holder.

⊘ Do not short circuit the battery terminals.

A short circuit across the battery terminals may cause abnormal heating, fire and burns.

⊘ Do not drop the battery or expose it to strong shocks or vibrations.

The battery may short circuit and overheat; electrolyte may leak out and cause burns or chemical damage.

❗ When the model is not being used, always remove or disconnect the battery.

Leaving the battery connected could create a dangerous situation if someone accidentally turns on the receiver power switch. Loss of control could occur.

❗ Always keep the charger disconnected from the outlet while it is not in use.

Storage And Disposal Precautions

⚠ Warning

⊘ Do not leave the radio system or models within the reach of small children.

A small child may accidentally operate the system. This could cause a dangerous situation and injuries. NiCd batteries can be very dangerous when mishandled and cause chemical damage.

⊘ Do not throw NiMH / NiCd / LiFe batteries into a fire. Do not expose batteries to extreme heat. Also do not disassemble or modify a battery pack.

Overheating and breakage will cause the electrolyte to leak from the cells and cause skin burns, loss of sight, and other injuries.

❗ When the system will not be used for any length of time, store the system with NiMH / NiCd batteries in a discharged state. Be sure to recharge the batteries prior to the next time the system is used.

If the batteries are repeatedly recharged in a slightly discharged state, the memory effect of the NiMH / NiCd battery may considerably reduce the capacity. A reduction in operating time will occur even when the batteries are charged for the recommended time. (After discharge to 1cell E.V.=1V)

❗ When a LiFe battery pack will not be used for a long time, to prevent it from deteriorating we recommend that it be kept in about the half capacity state instead of fully charged. Also be careful that the battery does not enter the over-discharged state due to self-discharge.
Periodically (about every 3 months) charge the battery.

⚠ Warning

⃠ Do not store your R/C system in the following places.
- Where it is extremely hot or cold.
- Where the system will be exposed to direct sunlight.
- Where the humidity is high.
- Where vibration is prevalent.
- Where dust is prevalent.
- Where the system would be exposed to steam and condensation.

Storing your R/C system under adverse conditions could cause deformation and numerous problems with operation.

❗ If the system will not be used for a long period of time, remove the batteries from the transmitter and model and store in a cool, dry place.

If the batteries are left in the transmitter, electrolyte may leak and damage the transmitter. This applies to the model also. Remove the batteries from it also to prevent damage.

<NiMH/NiCd Battery Electrolyte>

The electrolyte in NiCd / NiMH batteries is a strong alkali. Should you get even the smallest amount of the electrolyte in your eyes, DO NOT RUB. Wash immediately with water, and seek medical attention at once. The electrolyte can cause blindness. If electrolyte comes in contact with your skin or clothes, wash with water immediately.

<NiMH / NiCd / LiFe Battery Recycling>

A used battery is a valuable resource. Insulate the battery terminals and dispose of the battery by taking it to a battery recycling center.

Other Precautions

⚠ Caution

⃠ Do not expose plastic parts to fuel, motor spray, waste oil or exhaust.

The fuel, motor spray, waste oil and exhaust will penetrate and damage the plastic.

❗ Always use only genuine Futaba transmitters, receivers, servos, ESCs (electronic speed controls), NiMH/ NiCd / LiFe batteries and other optional accessories.

Futaba will not be responsible for problems caused by the use of other than genuine Futaba parts. Use the parts specified in the instruction manual and catalog.

Features

-T-FHSS SR (Super response) & telemetry T-FHSS

In addition to the T- FHSS telemetry system, we added a T-FHSS SR (Super response) system that increased processing speed to further improve response. (SR system does not support telemetry function)
*R304SB and R304SB-E are not compatible with SR system.

-T-FHSS MINIZ system

By setting to the MINIZ system in the receiver setting menu, you can use Kyosho Mini - Z Evo dedicated receiver RA-42. Dedicated receiver RA-42 requires purchase separately.

-Telemetry system

The T4PM transmitter has adopted the newly developed bidirectional communication system "T-FHSS".

-2.4GHzSS (Spread Spectrum) radio communication system

Frequency channel setting is unnecessary: Channel shifting takes place within the 2.4GHz band automatically. This system minimizes the interference from other 2.4GHz systems.

-Display switch

Display switch allows function setup without transmitting.

-Model memory for 40 models

Model names can use up to 10 letters, numbers, and symbols, so that logical names may be used. A model memory with different setups can be created by using the model copy function.

-4 axis Jog button.

The (JOG) button can be operated in 4 directions: up, down, left, and right.

-ESC-Link function (MC-LINK)

This dedicated function allows you set up the Link software so that your T4PM can control variable frequency and other data changes in Futaba speed controllers (ESCs): MC950CR, MC850C, MC851C, MC602C, MC402CR, etc.

-S.BUS servo

This is a special function that allows setting of the parameters of our S.BUS servo whose settings are changed by using PC Link software. In addition to the conventional wired system, it can be set wirelessly in combination with the R334SBS or R334SBS-E.

-Steering mixing

Smooth cornering is possible by independent left and right steering servo setting.

-Brake mixing for large cars (BRAKE)

Brake mixing of the front and rear wheels of 1/5 gas power cars and other large cars can be adjusted independently.

-Gyro mixing (GYRO MIX)
The sensitivity of Futaba car rate gyros can be adjusted from the T4PM.

-4WS mixing for crawlers and other 4WS type (4WS)
This function can be used with crawlers and other 4WS type vehicles.

-Dual ESCs mixing for crawlers cars (DUAL ESC)
ESCs at the front and rear are controlled independently.

-CPS-1 mixing (CPS MIX)
LED lighting and flashing control using our CPS-1 channel power switch can be matched to steering and throttle operation by switch only.

-Anti-skid braking system (TH A.B.S)
This function applies the brakes so that the tires of gas power cars, etc. do not lose their grip on the road even when braking at corners.

-Throttle acceleration (ACCEL)
gas power cars have a time lag before the clutch and brakes become effective.
The throttle acceleration function reduces this time lag.

-Throttle speed (SPEED)
Sudden trigger operation on a slippery road surface will only cause the tires to spin and the model to not accelerate smoothly. By setting the throttle speed function, operation can be performed smoothly and easily. It also suppresses battery consumption.

-Steering speed (SPEED)
When you sense that the steering servo is too fast, etc., the servo operating speed (direction that suppresses the maximum speed) can be adjusted.

-Racing timer (TIMER)
The lap timer can record 100 lap times and total time. The timer can also be started automatically by trigger operation. The race time and audible alarm can be set.
Re-/fueling time are indicated by an audible alarm. An up timer is also provided.

-Function select switch (SWITCH)/ dial function (TRIM DIAL)
This assigns functions to 2 switches and dials (digital trim, digital dial). The step amount and operating direction can also be adjusted. Trim positioning at each model call is unnecessary because all the dials are digital.

-Trigger position can be changed
The position of the throttle trigger can be moved forward and backward.

-Tension adjustment function
The tension of the steering wheel & throttle trigger springs can be adjusted from the outside.

-Mechanical ATL Adjustment
Make this adjustment when you want to decrease the total travel of the brake (push) side of the throttle trigger.

Set Contents

After opening the box, first check if the contents conform to the following. The contents depend on the set as shown below.

Transmitter	**T4PM**
Receiver	**R304SB / R304SB-E / R314SB / R314SB-E R334SBS / R334SBS-E**
Miscellaneous	**Dry battery holder** *Installed in transmitter. **Mini screwdriver** * It is used for receiver. **1.5mm hex wrench / 2.0mm hex wrench** **Instruction manual**

- If any of the set contents are missing, or you have any questions, please contact your dealer.

⚠Caution

❗ Be sure to use the correct Futaba receiver and suitable Futaba servo with the T4PM.

Under other conditions, the set will not operate, or the specified performance will not be displayed even if it operates. In addition, it may cause servo trouble.

System	Response / SR node	Usable servos
T-FHSS SR	SR mode channel: ON	- SR mode of Futaba SR compatible servo. (See page 79 for current listings.)
	SR mode channel: OFF	- Normal mode of Futaba SR compatible servo. - Futaba digital servo.
T-FHSS	HI-SPEED mode	- Normal mode of Futaba SR compatible servo. - Futaba digital servo.
	NORMAL mode	Futaba all servo. (Normal mode of Futaba SR compatible servo.)
S-FHSS	HI-SPEED mode	- Normal mode of Futaba SR compatible servo. - Futaba digital servo.
	NORMAL mode	- Futaba all servo. (Normal mode of Futaba SR compatible servo.)

Receiver battery: Matched to the ratings of the receiver and connected servo (dry cell battery cannot be used).

⊘ The R304SB-E, R314SB-E and R334SBS-E receivers are for electric. Please do not use for the gas powered models.

❗ Always use only genuine Futaba transmitters, receivers, servos, ESCs (electronic speed controls), batteries and other optional accessories.

Futaba will not be responsible for problems caused by the use of other than Futaba genuine parts. Use the parts specified in the instruction manual and catalog.

In addition, the FSU Fail-safe Unit cannot be used because the system is different. Use the fail-safe function of the transmitter.

The R304SB, R304SB-E, R314SB and R314SB-E receiver is not compatible with SR mode.

Nomenclature

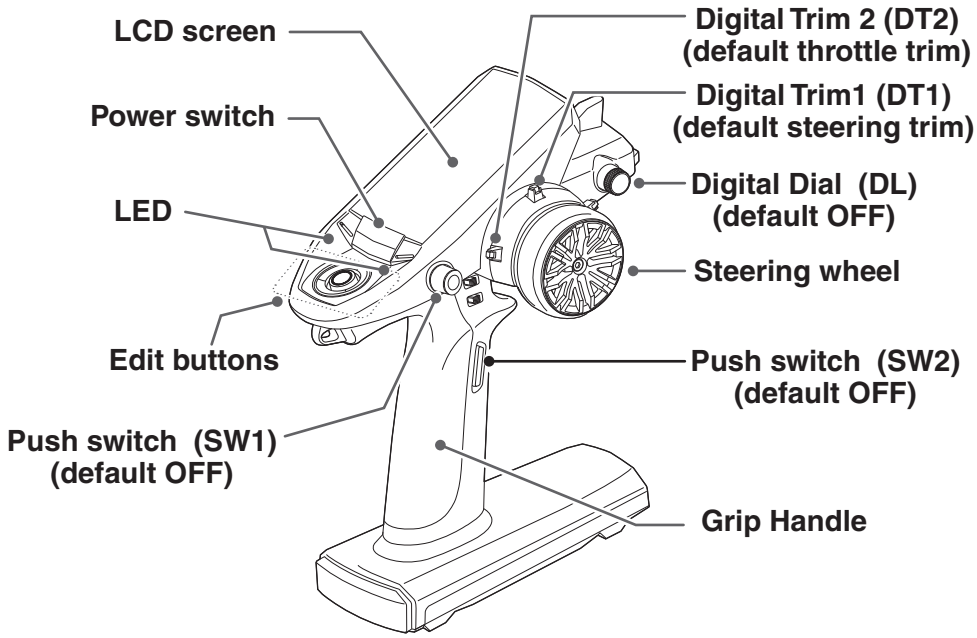

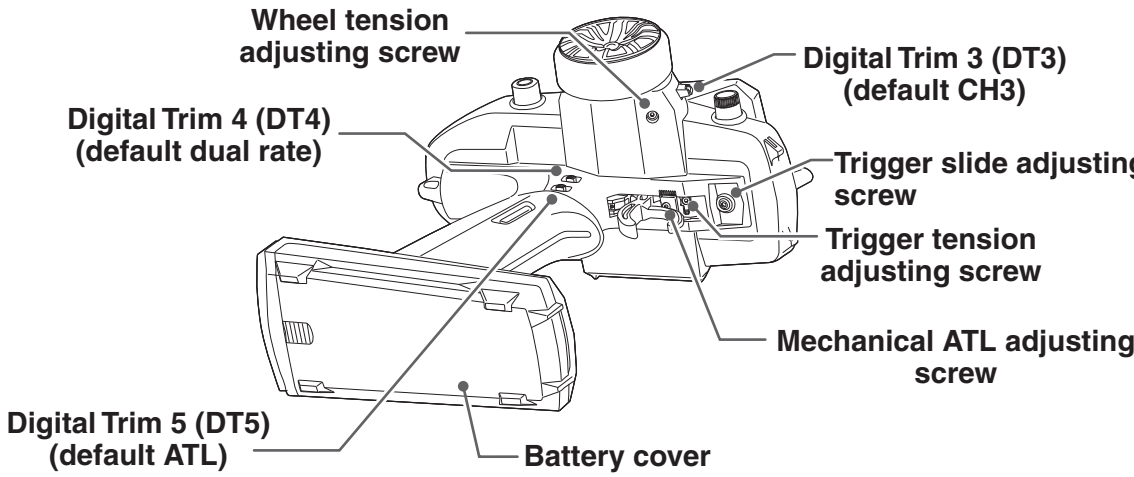

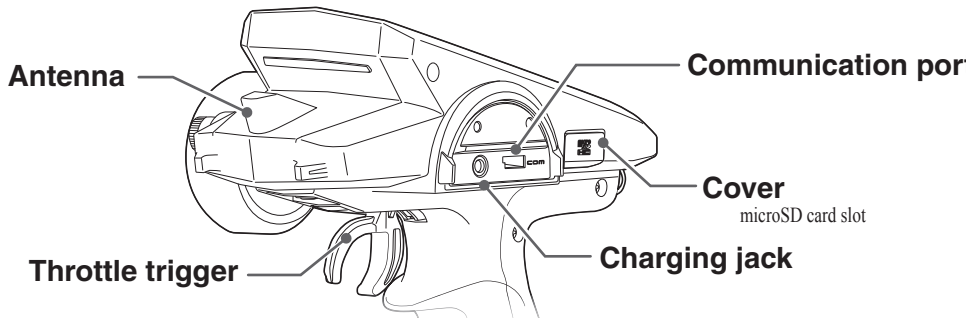

*The switches, dial, and trimmers in the figure are shown in the initial setting position.

Battery Replacement Method (3 AA Size Batteries)

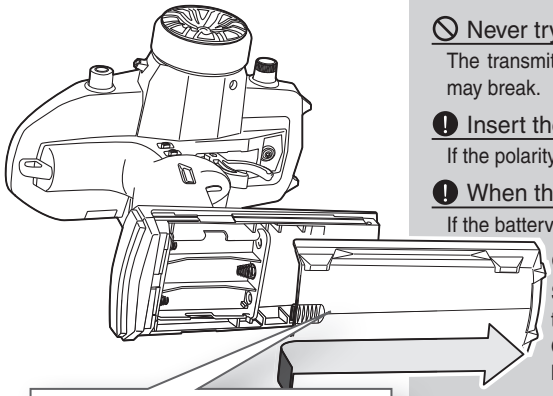

⚠Caution

⊘ Never try to recharge a dry cell battery.

The transmitter may be damaged or the battery electrolyte may leak or the battery may break.

❗ Insert the batteries in the correct polarity.

If the polarity is incorrect, the transmitter may be damaged.

❗ When the transmitter is not in use, remove the batteries.

If the battery electrolyte leaks, wipe off the case and contacts.

⊘ Do not use commercial AA size NiCd and NiMH batteries.

Since voltage is lower than alkaline dry battery, usable time is shortened.
Quick charging may cause the battery contacts to overheat and damage the battery holder.

Battery Replacement Method

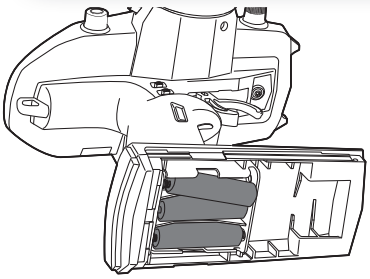

1 Remove the battery cover from the transmitter by sliding it in the direction of the arrow in the figure.

2 Remove the used batteries. Load the new AA size alkaline dry batteries. Pay very close attention to the polarity markings and reinsert accordingly.

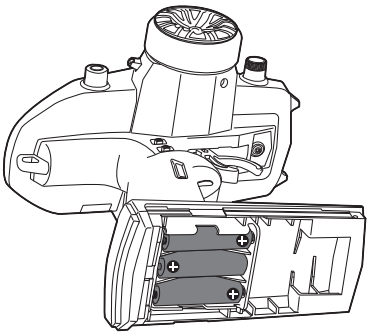

3 Slide the battery cover back onto the case.

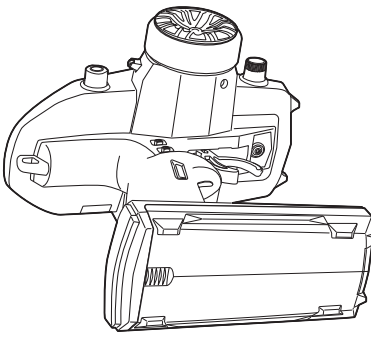

Check:

Turn the power switch on the transmitter to the ON position. Check the battery voltage display on the LCD screen. If the voltage is low, check the batteries for insufficient contact in the case or incorrect battery polarity.

Disposal of the Dry Cell Batteries:

The method to dispose of used dry cell batteries depends on the area in which you reside. Dispose of the batteries in accordance with the regulations for your area.

[Low Battery Alarm]

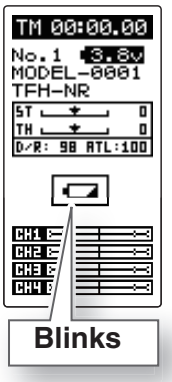

If the transmitter battery voltage drops below the usable range, an audible alarm will sound and " " mark will be displayed on the LCD screen.

⚠ Warning

❗ When a low battery alarm is generated, cease operation immediately and retrieve the model. Always replace with a new dry battery before running next.

If the battery goes dead while in operation, you will lose control of the model.

Reference:

By changing the AA size alkaline dry batteries from 3 to 4, you can extend the usable time. Please use 4P-SQ (for T4PV, T4PLS) for dry cell box. Refer to page 80 for mounting method. If you changed the size of AA batteries to 4, be sure to change the power supply type to "CSTM" in the BATT setting (page 41) of the system and set the low battery alarm voltage to 4.1V.

When Using The Optional Battery

When using an optional rechargeable battery, replace the battery as described below.

-Always use the optional FT2F1100B, FT2F1700BV2 or FT2F2100BV2 rechargeable battery.

-Be sure to attach the included battery spacer to the battery.

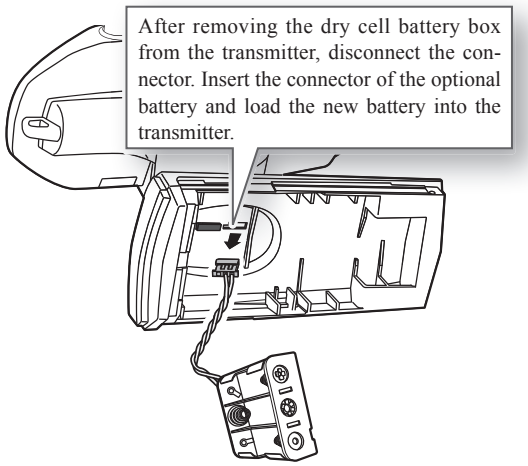

Battery Replacement Method

1 Refer to the previous description and remove the transmitter battery cover. (See page 15) After removing the dry cell battery box from the transmitter, disconnect the connector.

2 Insert the connector of the new battery and load the new battery into the transmitter. Finish by installing the battery cover.

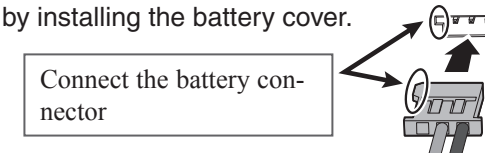

⚠Caution

❗ When closing the battery cover, be careful that the battery cover does not pinch the battery lead wires.

Shorting of the battery lead wires may lead to fire and abnormal heating and cause burns or fire disaster.

❗ Since the usable range of LiFe batteries is different, the power supply used must be set by system setting (page 41).

If used with wrong setting, the transmitter may shut down before warning of low battery alarm. There is a danger that a car (boat) runs away.

❗ When a low battery alarm is generated, cease operation immediately and retrieve the model. Always charge before use.

If the battery goes dead while in operation, you will lose control of the model.

Charging A LiFe Battery

(Example: When using the FT2F1100B / 1700BV2 / 2100BV2 with the special charger)

1 Plug the transmitter cord of the special charger into the charging jack on the rear of the transmitter.

2 Plug the charger into an AC outlet.

3 Check that the charging LED lights red.

4 When charging is completed, the charging LED lights green. Disconnect the charge plug and disconnect the AC plug of the charger.

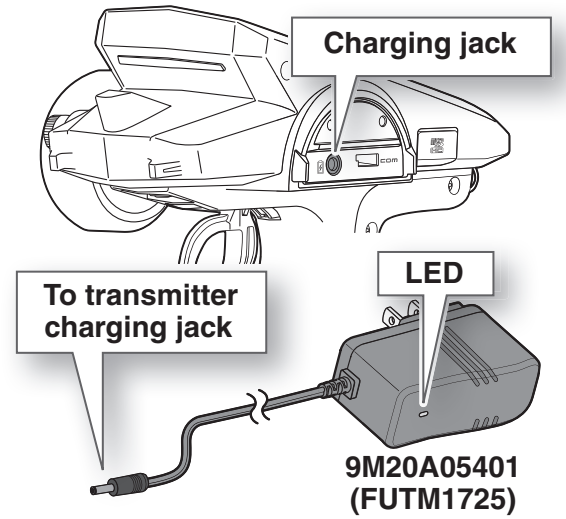

With Balance Charger

(Example: When using the FT2F100B / 1700BV2 / 2100BV2 with an optional charger)

1 Remove the battery cover.

2 Disconnect the battery from the T4PM.

3 Balance charging cannot be done through the transmitter. You must remove the LiFe battery to do this charge.

Follow the directions of the optional LiFe chargers in use.

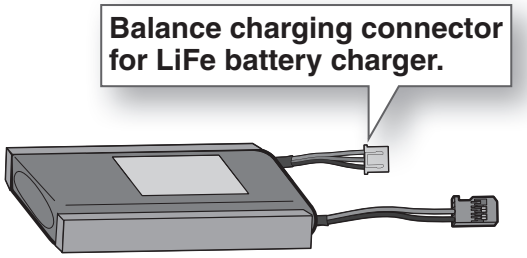

LiFe battery is removed from the transmitter.

The charging time when charging the FT2F2100BV2 battery with the optional special charger is approximately 3 hours, the FT2F1700BV2 battery is 2.5 hours, the FT2F1700BV2 battery is 2 hours. When the LiFe battery will not be used for a long time, to prevent it from deteriorating we recommend that it be kept in about the half capacity state instead of fully charged. Also be careful that the battery does not enter the overdischarged state due to self discharge. Periodically (about every 3 months) charge the battery. In addition, always remove the battery from the model and store it in a dry, cool place (15°C~25°C).

⚠Warning

⊘ Make sure not to peel off the battery film, or make any scratch by a cutter knife or the sharp edges of metal components.

⊘ Make sure not to soak or get the battery wet with water or seawater.

⊘ Make sure not to use a deformed or swollen battery.

There is a risk of explosion or fire, which is very dangerous.

Caution on charger

⚠Warning

⊘ The charger 9M20A05401 (FUTM 1725) does not charge batteries other than FT2F1100B / FT2F1700B V2 / FT2F2100B V2.

Overcharging could cause the battery to overheat, leak or explode. This may lead to fire, burns, loss of sight and many other types of injuries.

⊘ Never plug it into an outlet having other than the indicated voltage.

Plugging the charger into the wrong outlet could result in an explosion or fire.

⊘ Do not insert and remove the charger when your hands are wet.

It may cause an electric shock.

❗ Always use the special charger or a quick charger for digital proportional R/C sets to charge a digital proportional R/C set battery.

Overcharging a NiMH battery can result in burns, fire, injuries, or loss of sight due to overheating, breakage, or electrolyte leakage.

⚠Caution

⊘ Do not plug the charger to the charging jack, if the battery is not connected to the transmitter.

The transmitter may be damaged.

❗ When the charger is not in use, disconnect it from the AC outlet.

Do this to prevent accidents and to avoid overheating.

Power Switch & Key Operation

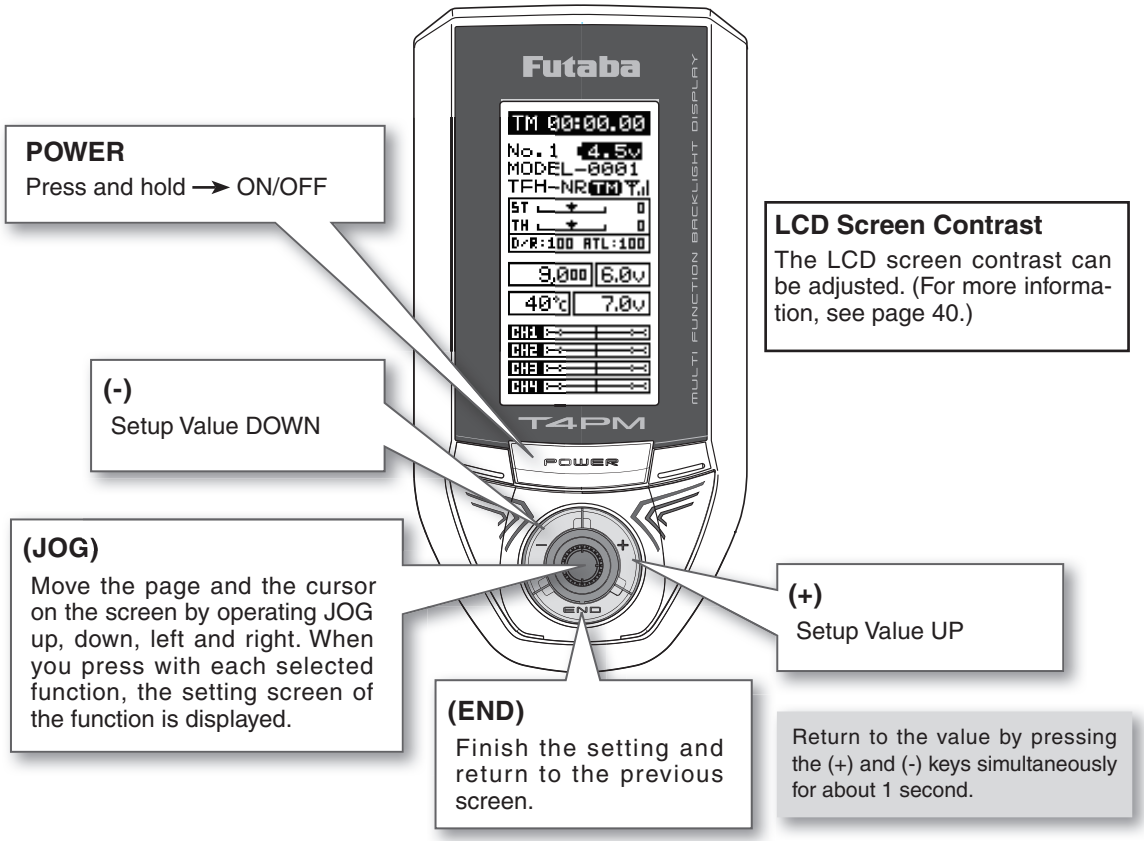

Display When Power Switch Is Turned On

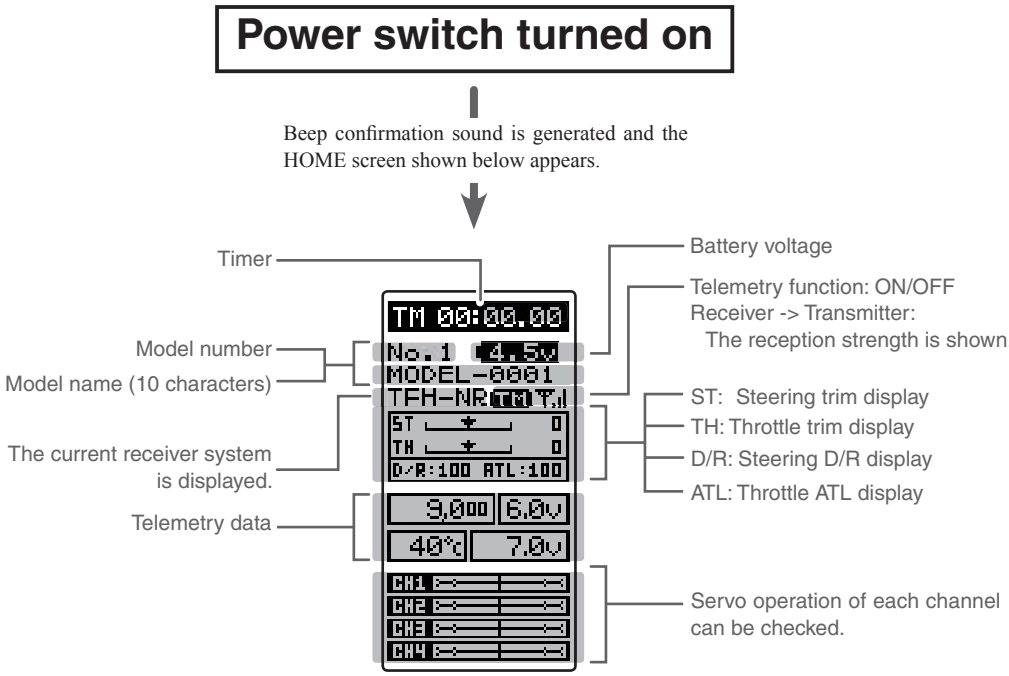

Power Off Forgotten Alarm & Auto Power Off

When the steering wheel, throttle trigger, push switch, or edit button are not operated for 10 minutes (default), an alarm sounds and "NOT OPERATED FOR A LONG TIME" is displayed on the LCD screen.

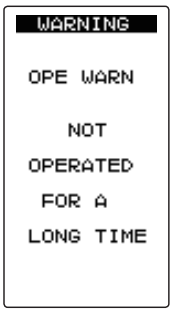

When the steering wheel, throttle trigger, push switch, or edit button are operated, the alarm is reset. If the alarm is not reset, the auto power off function will automatically turn off the power after 5 minutes. If the system is not to be used, turn off the power.

The function can be deactivated at the system menu (page 42).

Steering Wheel And Throttle Trigger Operation

(CH1: Steering wheel, CH2: Throttle trigger)

Steering Wheel Function: Turns the model right or left.

Throttle Trigger Function: Controls the speed of the model as well as the direction of travel - forward or reverse.

Throttle trigger function

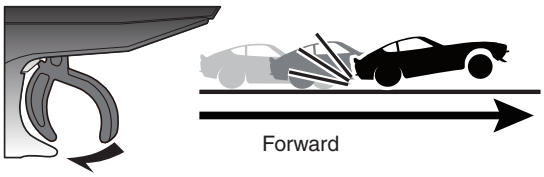

Pull

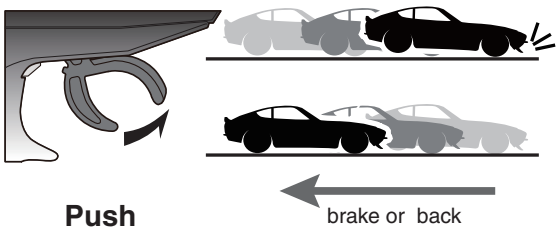

Push

Steering wheel function

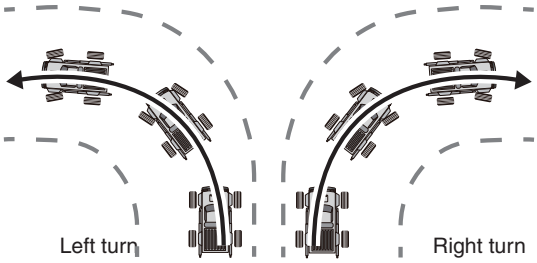

Left

Right

Digital Trim Operation

(Initial settings: DT1: Steering trim, DT2: Throttle trim, DT3: Channel 3, DT4: Steering D/R, DT5: ATL-Brake rate)

Operating by the trim: Push the trim lever to the left or right (up or down). The current position is displayed on the LCD screen.

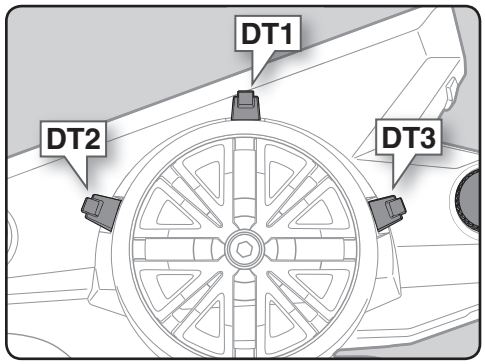

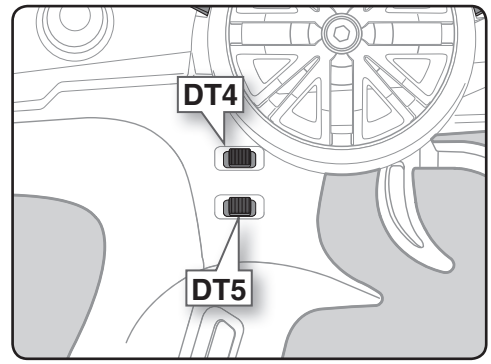

- Each step is indicated by a tone.
- When the trim exceeds the maximum trim adjustment range, the beep will change and the servo will not move any farther.
- Steering D/R: The steering left and right servo travels are adjusted simultaneously.
- ATL: Decreases the set value when the braking effect is strong and increases the set value when the braking effect is weak.

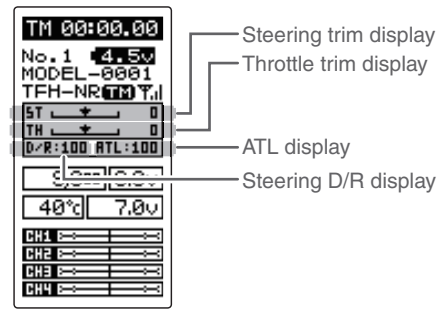

Steering And Throttle Trim Operation

With the center trim feature, trim adjustments have no effect on the maximum servo travel. This prevents the linkages from binding when adjustments are made.

Mechanical ATL Adjustment

Make this adjustment when you want to decrease the stroke of the brake (back) side of the throttle trigger to your preferences.

Adjustment

1 Using a 1.5 mm hex wrench, adjust the trigger brake (reverse) stroke. (The screw moves the throttle trigger stopper.)

- When the screw is turned clockwise, the stroke becomes narrower. Adjust the stroke while watching the screw.

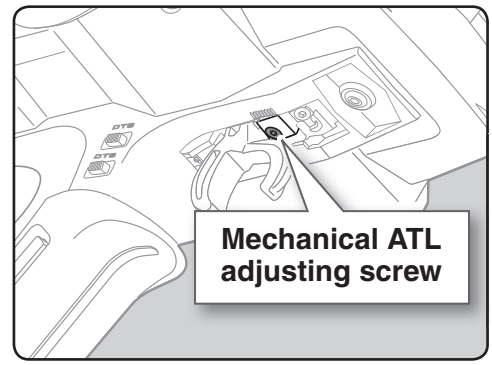

Note:

Once you have changed the mechanical stroke on the brake side, be sure to adjust the scale of the throttle channel accordingly by using the "Adjuster Function" (page 71).

Due to this change, you also need to adjust in most cases the travel of the throttle servo by using "End Point Adjuster".

Wheel & Trigger Tension Adjustment

Make this adjustment when you want to change the wheel or trigger spring's tension.

Adjustment

1 Using a 1.5mm hex wrench, adjust the spring tension of the wheel or throttle by turning the screw shown in the figure.
The wheel side is inside the adjustment hole.

- The spring is set to the weakest tension at the factory.
- When the adjusting screw is turned clockwise, the spring tension increases.

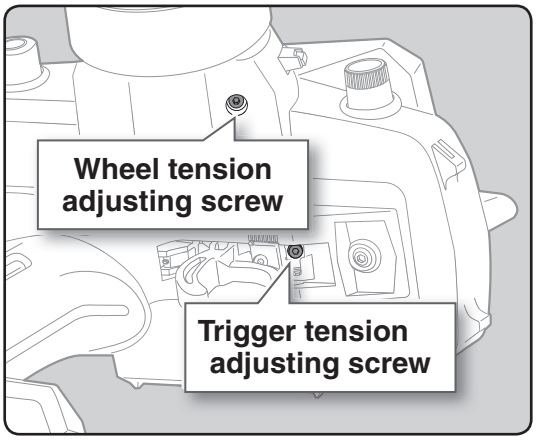

Note:

The adjustment range is up to 7 to 8 turns from the fully tightened (strongest) position. If turned farther than this, the adjusting screw may fall out.

Trigger Slide Adjustment

The throttle trigger position can be moved forward and backward.

Adjustment

1 Using a 2.0 mm hex wrench, loosen the trigger slide mounting screw by turning it slightly counterclockwise.

- Always loosen this screw.

Note:

If the trigger slide screw is turned too much, the screw may fall out.

2 Using a 2.5mm hex wrench, turn the trigger slide adjusting screw, and adjust the trigger slide position within the marked range. When the adjusting screw is turned clockwise, the trigger slide moves away from the grip handle.

3 Retighten the mounting screw loosened at step 1 and fasten the trigger slide.

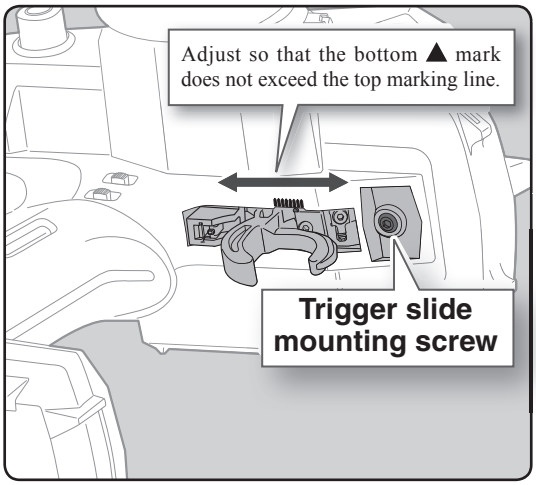

About Transmitter Antenna and Receiver

About The Transmitter Antenna

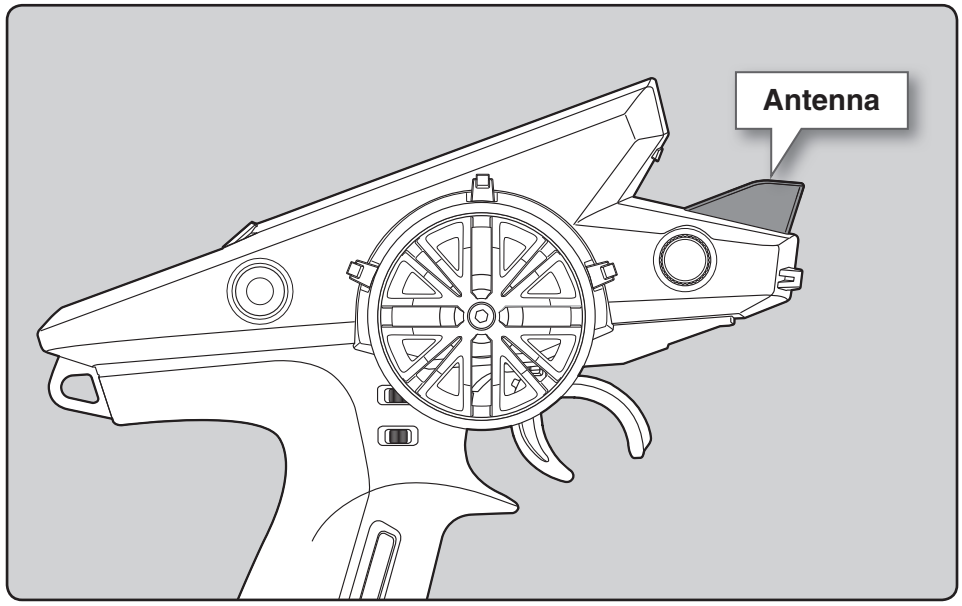

⚠ Warning

⃠ Please do not grasp the transmitter's antenna while driving.

Doing so may degrade the quality of the RF transmission to the model.

***A small glitch may occur if the transmitter antenna is brought close to servos, ESCs or other peripheral devices. This is not a serious issue, but keep it in mind (especially during setup).**

Receiver Terminology

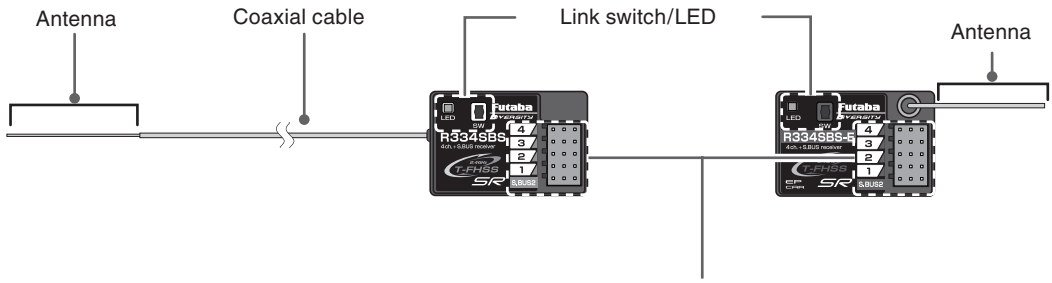

*R314SB-E has no external antenna. LED / Link switch and connector part are the same as R314SB.

*The receiver power supply can be connected to the S.BUS2 connector or each of CH1-4.

Connectors

4: CH4 servo(CH4)

3: CH3 servo(CH3)

2: Throttle servo(CH2)

1: Steering servo(CH1)

S.BUS2: Power /S.BUS2 connector