Thank you for purchasing a Futaba 4PX-2.4GHz system.
Before using your 4PX-2.4GHz system, read this manual carefully in order to use your R/C set safely.
After reading this manual, store it in a safe place.

IN NORTH AMERICA

Please feel free to contact the Futaba Service Center for assistance in operation, use and programming. Please be sure to regularly visit the 4PX Frequently Asked Questions web site at www.futaba-rc.com/faq/. This page includes extensive programming, use, set up and safety information on the 4PX radio system and is updated regularly. Any technical updates and US manual corrections will be available on this web page. If you do not find the answers to your questions there, please see the end of our F.A.Q. area for information on contacting us via email for the most rapid and convenient response.

Don't have Internet access? Internet access is available at no charge at most public libraries, schools, and other public resources. We find internet support to be a fabulous reference for many modelers as items can be printed and saved for future reference, and can be accessed at any hour of the day, night, weekend or holiday. If you do not wish to access the internet for information, however, don't worry. Our support teams are available Monday through Friday 8-5 Central time to assist you.

FOR SERVICE ONLY:
Futaba Service Center
3002 N. Apollo Drive, Suite 1
Champaign, IL 61822
Phone: 217-398-0007
www.futaba-rc.com/service.html
Email: futabaservice@hobbico.com

FOR SUPPORT :
(PROGRAMMING AND USER QUESTIONS)
Please start here for answers to most questions:
www.futaba-rc.com/faq/
Fax: 217-398-7721
Phone: 217-398-8970 option 2
E-mail: support@futaba-rc.com

OUTSIDE NORTH AMERICA

Please contact your Futaba importer in your region of the world to assist you with any questions, problems or service needs.

Please recognize that all information in this manual, and all support availability, is based upon the systems sold in North America only. Products purchased elsewhere may vary. Always contact your region's support center for assistance.

4PX-Eng-01-P2-3.indd 2 2014/07/18 12:56:04

Application, Export, and Modification

1. This product may be used for models only. It is not intended for use in any application other than the control of models for hobby and recreational purposes.

2. Exportation precautions:

(a) When this product is exported from the country of manufacture, its use is to be approved by the laws governing the country of destination for devices that emit radio frequencies. If this product is then re-exported to other countries, it may be subject to restrictions on such export. Prior approval of the appropriate government authorities may be required. If you have purchased this product from an exporter outside your country, and not the authorized Futaba distributor in your country, please contact the seller immediately to determine if such export regulations have been met.

(b) Use of this product with other than models may be restricted by Export and Trade Control Regulations, and an application for export approval must be submitted.

3. Modification, adjustment, and replacement of parts: Futaba is not responsible for unauthorized modification, adjustment, and replacement of parts on this product. Any such changes may void the warranty.

Battery Recycling (for U.S.A.)

The RBRC. SEAL on the nickel-cadmium battery contained in Futaba products indicates that Futaba Corporation is voluntarily participating in an industry-wide program to collect and recycle these batteries at the end of their useful lives, when taken out of service within the United States. The RBRC. program provides a convenient alternative to placing used nickel-cadmium batteries into the trash or municipal waste system, which is illegal in some areas.

(for USA)

You may contact your local recycling center for information on where to return the spent battery. Please call 1-800-8BATTERY for information on NiCd battery recycling in your area. Futaba Corporation involvement in this program is part of its commitment to protecting our environment and conserving natural resources.

RBRC™ is a trademark of the Rechargeable Battery Recycling Corporation.

- No part of this manual may be reproduced in any form without prior permission.
- The contents of this manual are subject to change without prior notice.
- This manual has been carefully written. Please write to Futaba if you feel that any corrections or clarifications should be made.
- Futaba is not responsible for the use of this product.

4PX-Eng-01-P2-3.indd 3 2014/07/18 12:56:04

Table Of Contents

For Your Safety As Well As That Of Others.....8

Explanation of Symbols.....8
2.4GHz System Precautions.....8
High Speed Mode Precautions.....8
Operation Precautions.....9
Battery Handling Precautions.....10
Storage and Disposal Precautions.....11
Other Precautions.....11

Before Using 12

Features.....12
Set Contents.....14
Transmitter T4PX.....15
- T4PX Nomenclature.....15
- Power & Display Switch.....16
- Power Off Forgotten Alarm & Auto Power Off.....16
- Low Battery Alarm.....16
- Digital Trim Operation (Wheel).....17
- Digital Trim Operation (Grip).....17
- Mechanical ATL Adjustment.....18
- Wheel & Trigger Tension Adjustment.....18
- Trigger Slide Adjustment & Remove The High Point Spring.....19
- Battery Replacement Method (4 AA Suze Batteries).....19
- When Using The Optional Battery.....20
- When Charging For The Optional Battery.....20
- Display When Power Switch Turned On.....21
- Trim/Dial Lock.....21
- Total Timer.....21
- Changing Wheel Position And Modifying For Left-hand Use.....22
- Using the optional angle spacer.....28
- Trigger brake lever replacement.....28

Non-telemetry LED (telemetry OFF sign).....29
Handling the antenna and card slot and receiver.....29
- About T4PX Antenna.....29
- Handling an microSD card (commercial product).....30
- Receiver Terminology.....31
- Receiver Installation.....31

Installation 32

Receiver and Servo Connections.....32
Installation Safety Precautions.....33

4PX-Eng-02-Table-P4-7.indd 4 2014/07/18 17:07:30

Initial Set-Up 36

Preparations (Transmitter).....36

RF Output & Rx Type Check 36
Receiver Type Change & How To Link 37
Receivers Other Than T-FHSS 39
Servo Type Check 39
Trigger Ratio Check.....40
Trims Initial Set-Up 40

Function Map 42

Menu Selection 42

Calling The Menu Screen.....42

Direct Menu 44

Functions List.....45

Functions 46

Receiver Setting/Servo Type.....46

Receiver type (T-FHSS/S-FHSS/FASST(C1), Servo type (Digital/Analog) select

Ch. Reverse 47

Servo operation reversing

Sub trim 48

Servo center position fine adjustment

End Point Adjuster 49

End point adjustment

Acceleration (Throttle Acceleration).....52

Function which adjusts the movement characteristic from the throttle neutral position

Fail Safe/Battery Fail Safe Function 54

Fail safe, battery fail safe

Steering Curve (EXP) 56

Steering operation curve adjustment

Throttle Curve.....57

Throttle curve adjustment

Steering Speed 61

Steering servo delay

Throttle Speed 63

Throttle servo delay

Trigger Mode.....66

Neutral brake function
Throttle servo forward and brake operation proportion setting (Trigger ratio)
Trigger Switch

Idle-Up 69

Idle up at engine start

Start Function.....70

Throttle preset at start function

4PX-Eng-02-Table-P4-7.indd 5 2014/07/18 17:07:30

Engine Cut 71
Engine cut off by switch
A.B.S. Function.....73
Pulse brake
Mixing Menu.....78
Brake Mixing 80
Front and rear independent brake control for 1/5GP car, etc.
Steering Mixing.....84
Twin servo steering system
4WS Mixing 86
For corolla and other 4WS type vehicles mixing
Gyro Mixing.....88
Futaba car rate gyro
Dual ESC Mixing.....90
Front ESC and rear ESC
CPS-1 Mixing 92
Futaba CPS-1 channel power switch
Tilt Mixing.....94
Outboard engine
Program Mixing 1,2,3,4,5 96
Programmable mixes between arbitrary channels
Switch Select 99
Selection of functions operated by push switches
Dial Select 101
Selection of functions operated by digital dial and digital trim
Timer Function 104
Up, Fuel down, lap, or lap navigation timer
Lap List 111
Lap timer data (lap time, average lap time) check
Model Select 112
Model memory call
Model Name 113
Model memory name set/modify
Model Copy 114
Model memory copy
Data Reset.....116
Model memory reset
MC Link Function (ESC Link) 117
Special function, Futaba ESC (MC960CR, MC851C, MC602C, MC402CR...etc.)
S.BUS Servo.....117
Special function, Futaba S.BUS/S.BUS2 servo parameter setup

4PX-Eng-02-Table-P4-7.indd 6 2014/07/18 17:07:31

Telemetry System **130**
Telemetry Menu 131
Telemetry :Receiver Battery 132
Telemetry :The Drive Battery 133
Telemetry :RPM 134
Telemetry :Temperature 135
Sensor Menu **136**
Sensor List 136
Sensor Reload 137
Sensor Register 138
Change Slot 139
Condition Function **140**
Two kinds of data can be set in one model
Response **142**
The operation response can be adjusted
System Menu **143**
Display/ Sound/ LED setting/ Battery/ User name/ Data and Time/ Calibrattion/ Information
Display setting **144**
Sound Setting **146**
LED Setting **147**
Battery Type Setting **148**
User Name **149**
Data And Time **150**
Information **151**
Calibration **152**
Steering Dual Rate/ Throttle ATL "D/R ATL" **154**
Steering angle adjustment while running (dual rate)
Brake side adjustment
Auxiliary Channel "CH3","CH4" **155**
Channel 3/4 servo operation position set/check
Servo View **156**
Displays servo operation on a bar graph

Reference 157

Specifications **157**
Optional Parts **158**
Warning Displays **160**
When requesting repair (For U.S.A.) **162**

4PX-Eng-02-Table-P4-7.indd 7 2014/07/18 17:07:31

Use this product in a safe manner. Please observe the following safety precautions at all times.

Explanation of Symbols

The parts of this manual indicated by the following symbols are extremely important and must be observed.

Symbols	Explanation
⚠Danger	Indicates a procedure which could lead to a dangerous situation and may cause death or serious injury if ignored and not performed properly.
⚠Warning	Indicates procedures which may lead to dangerous situations and could cause death or serious injury as well as superficial injury and physical damage.
⚠Caution	Indicates procedures that may not cause serious injury, but could lead to physical damage.

Symbols: ⃠ : Prohibited ❗ : Mandatory

2.4GHz System Precautions

⚠Warning

⃠ Special attention should be paid before turning on the system while other cars are running or other airplanes are flying because the 2.4GHz RC system could potentially affect them.

❗ Be sure to set the Fail Safe function.

Digital Servo Type Precautions

⚠Caution

❗ When using the 4PX in the "Digital servo" type, always use it under the following conditions:

Servos :Futaba digital servo (including BLS Series brushless servos)
Receiver's battery :Matched to the ratings of the receiver and connected digital servo (dry cell battery cannot be used).
Transmitter mode :Digital servo type(See p.39 for setting method.)

Under other conditions, the set will not operate, or the specified performance will not be displayed even if it operates. In addition, it may cause servo trouble. Futaba will not be responsible for damage, etc. caused by combination with the products of other companies.

In addition, the FSU Fail Safe Unit cannot be used because the system is different. Use the fail safe function of the transmitter.

❗ When using analog servos, always switch the 4PX servo type to the "Analog servo" mode.

Transmitter mode :Analog servo type(See p.39 for setting method.)
Receiver's battery :Matched to the ratings of the receiver and connected servo.

The set cannot operate in the "Digital servo" type. Operation in this type will cause trouble with the servo and other equipment.

Digital servos (including BLS Series brushless servos) can also be used in the "Analog servo" type.

4PX-Eng-03-Safety-P8-11.indd 8 2014/07/17 12:47:08

Operation Precautions

⚠Warning

⊘ Do not operate outdoors on rainy days, run through puddles of water or use when visibility is limited.

Should any type of moisture (water or snow) enter any component of the system, erratic operation and loss of control may occur.

⊘ Do not operate in the following places.

-Near other sites where other radio control activity may occur.
-Near people or roads.
-On any pond when passenger boats are present.
-Near high tension power lines or communication broadcasting antennas.

Interference could cause loss of control. Improper installation of your Radio Control System in your model could result in serious injury.

⊘ Do not operate this R/C system when you are tired, not feeling well or under the influence of alcohol or drugs.

Your judgment is impaired and could result in a dangerous situation that may cause serious injury to yourself as well as others.

⊘ Do not touch the engine, motor, speed control or any part of the model that will generate heat while the model is operating or immediately after its use.

These parts may be very hot and can cause serious burns.

❗ Always perform an operating range check prior to use.

Problems with the radio control system as well as improper installation in a model could cause loss of control.

(Simple range test method)

Have a friend hold the model, or clamp it down or place it where the wheels or prop cannot come in contact with any object. Walk away and check to see if the servos follow the movement of the controls on the transmitter. Should you notice any abnormal operation, do not operate the model. Also check to be sure the model memory matches the model in use.

❗ Turning on the power switches.

Always check the throttle trigger on the transmitter to be sure it is at the neutral position.

1. Turn on the transmitter power switch.
2. Turn on the receiver or speed control power switch.

Turning off the power switches

Always be sure the engine is not running or the motor is stopped.

1. Turn off the receiver or speed control power switch.
2. Then turn off the transmitter power switch.

If the power switches are turned off in the opposite order, the model may unexpectedly run out of control and cause a very dangerous situation.

❗ When making adjustments to the model, do so with the engine not running or the motor disconnected.

You may unexpectedly lose control and create a dangerous situation.

(Fail safe function)

❗ Before running (cruising), check the fail safe function.

Check Method; Before starting the engine, check the fail safe function as follows:

1) Turn on the transmitter and receiver power switches.

2) Wait at least one minute, then turn off the transmitter power switch. (The transmitter automatically transfers the fail safe data to the receiver every minute.)

3) Check if the fail safe function moves the servos to the preset position when reception fails.

The fail safe function is a safety feature that minimizes set damage by moving the servos to a preset position when reception fails. However, if set to a dangerous position, it has the opposite effect. When the reverse function was used to change the operating direction of a servo, the fail safe function must be reset. Setting example: Throttle idle or brake position

4PX-Eng-03-Safety-P8-11.indd 9 2014/07/17 12:47:10

Battery Handling Precautions

(Only when Ni-MH/Li-ion batteries are used)

⚠Warning

⊘ Never plug the charger into an outlet of other than the indicated voltage.

Plugging the charger into the wrong outlet could result in an explosion or fire.

⊘ Never insert or remove the charger while your hands are wet.

You may get an electric shock.

⊘ Do not use the transmitter's battery, HT5F1700B or FT2F1700BV2 as the receiver's battery.

Since the transmitter's battery has an overload protection circuit, the output power will be shut down when the high current load is applied. This may result in runaway or fatal crash.

❗ Always check to be sure your batteries have been charged prior to operating the model.

Should the battery go dead while the model is operating, loss of control will occur and create a very dangerous situation.

❗ To recharge the transmitter battery, use the special charger made for this purpose.

Overcharging could cause the battery to overheat, leak or explode. This may lead to fire, burns, loss of sight and many other types of injuries.

⚠Caution

⊘ When running (cruising), do not use the dry cell battery box at the transmitter.

The accessory dry cell battery box is for performance checks. Do not use it for other than performance checks. The dry cell battery may be separated from the battery box contacts by shock and the power cut off. If the power is cut off while running (cruising), a collision may occur. The use of Futaba a genuine NiMH or LiFe battery pack is strongly recommended.

⊘ Do not use commercial AA size Ni-MH and Li-ion batteries.

Quick charging may cause the battery contacts to overheat and damage the battery holder.

⊘ Do not short circuit the battery terminals.

A short circuit across the battery terminals may cause abnormal heating, fire and burns.

⊘ Do not drop the battery or expose it to strong shocks or vibrations.

The battery may short circuit and overheat; electrolyte may leak out and cause burns or chemical damage.

❗ When the model is not being used, always remove or disconnect the battery.

Leaving the battery connected could create a dangerous situation if someone accidentally turns on the receiver power switch. Loss of control could occur.

❗ Always keep the charger disconnected from the outlet while it is not in use.

Do this to prevent accidents and to avoid overheating.

⊘ Do not connect the charger when the battery is not connected.

A load will be applied to the circuit and the transmitter may be damaged.

4PX-Eng-03-Safety-P8-11.indd 10 2014/07/17 12:47:13

Storage and Disposal Precautions

⚠Warning

⊘ Do not leave the radio system or models within the reach of small children.

A small child may accidentally operate the system. This could cause a dangerous situation and injuries. Ni-Cd batteries can be very dangerous when mishandled and cause chemical damage.

⊘ Do not throw Ni-MH/LiFe batteries into a fire. Do not expose batteries to extreme heat. Also do not disassemble or modify a battery pack.

Overheating and breakage will cause the electrolyte to leak from the cells and cause skin burns, loss of sight, and other injuries.

❗ When the system will not be used for any length of time, store the system with HT5F1700B batteries in a discharged state. Be sure to recharge the batteries prior to the next time the system is used.

If the batteries are repeatedly recharged in a slightly discharged state, the memory effect of the Ni-Cd battery may considerably reduce the capacity. A reduction in operating time will occur even when the batteries are charged for the recommended time. (After discharge to 1cell E.V.=1V)

<Battery Electrolyte>

The electrolyte in Ni-MH/Ni-Cd batteries is a strong alkali. Should you get even the smallest amount of the electrolyte in your eyes, DO NOT RUB. Wash immediately with water, and seek medical attention at once. The electrolyte can cause blindness. If electrolyte comes in contact with your skin or clothes, wash with water immediately.

⚠Warning

⊘ Do not store your R/C system in the following places.

- Where it is extremely hot or cold.
- Where the system will be exposed to direct sunlight.
- Where the humidity is high.
- Where vibration is prevalent.
- Where dust is prevalent.
- Where the system would be exposed to steam and condensation.

Storing your R/C system under adverse conditions could cause deformation and numerous problems with operation.

❗ If the system will not be used for a long period of time, remove the batteries from the transmitter and model and store in a cool, dry place.

If the batteries are left in the transmitter, electrolyte may leak and damage the transmitter. This applies to the model also. Remove the batteries from it also to prevent damage.

<Battery Recycling>

A used battery is a valuable resource. Insulate the battery terminals and dispose of the battery by taking it to a battery recycling center.

Other Precautions

⚠Caution

⊘ Do not expose plastic parts to fuel, motor spray, waste oil or exhaust.

The fuel, motor spray, waste oil and exhaust will penetrate and damage the plastic.

❗ Always use only genuine Futaba transmitters, receivers, servos, ESCs (electronic speed controls), Ni-MH/Ni-Cd/Li-ion batteries and other optional accessories.

Futaba will not be responsible for problems caused by the use of other than Futaba genuine parts. Use the parts specified in the instruction manual and catalog.

4PX-Eng-03-Safety-P8-11.indd 11 2014/07/17 12:47:15

Features

-High balance design
Rigidity is improved and weight is lightened 15g from that of the previous model by design that effectively impacts the age and the use of aluminum at part of the frame.

-Full color LCD
Excellent outdoor visibility OVGA3.5 inch backlighted color TFT liquid crystal. Enlarged display improves visibility tremendously.

-High response & telemetry T-FHSS
Increased response T-FHSS transmission increases response by 30% over that of the previous model. In addition, receiver power supply voltage and other information from the receiver can be displayed at the transmitter by fast, stable bidirectional transmission.

-Updateable software
Software can be updated by microSD card. Model data can also be saved in a microSD card. In addition, telemetry log data can be saved.

-Model memory for 40 models
Model names can use up to 10 letters, numbers, and symbols, so that logical names may be used. A model memory with different setups can be created by using the model copy function.

-Brake mixing for large cars
Brake mixing of the front and rear wheels of 1/5GP and other large cars can be adjusted inde pendently.

-Steering mixing
Smooth cornering is possible by independent left and right steering servo setting.

-4WS mixing for crawlers and other 4WS type
This function can be used with crawlers and other 4WS type vehicles.

-Dual ESCs mixing for crawlers cars
ESC at the front and rear are controlled independently.

-Gyro mixing
The sensitivity of Futaba car rate gyros can be adjusted from the T4PX.

-CPS mixing
LED lighting and flashing control using our CPS-1 channel power switch can be matched to steering and throttle operation by switch only.

-S.BUS servo
This is a special function that allows setting of the parameters of our S.BUS servo whose settings are changed by using PC Link software.

-MC-Link
This is a dedicated function which allows setting of the contents of the Link software which makes possible Futaba speed controller (ESC), MC960CR, MC950CR, MC850C, MC851C, MC602C, MC402CR, etc. variable frequency and other data changes by PC at the T4PX.

4PX-Eng-04-Before-P12-31.indd 12 2014/07/18 16:59:26

-Response change function
The operation response can be set in 50 steps to match your preference and the course and vehicle.

-Anti-skid braking system (A.B.S.)
This function applies the brakes so that the tires of gasoline engine cars, etc. do not lose their grip on the road even when braking at corners.

-Throttle acceleration
Gasoline engine cars have a time lag before the clutch and brakes become effective.
The TH-ACCEL function reduces this time lag.

-Throttle speed
Sudden trigger operation on a slippery road surface will only cause the tires to spin and the model to not accelerate smoothly. By setting the throttle speed function, operation can be performed smoothly and easily. It also suppresses battery consumption.

-Steering speed
When you sense that the steering servo is too fast, etc., the servo operating speed (direction that suppresses the maximum speed) can be adjusted.

-Non-telematry LED
When the telemetry function is OFF to confirm that the telemetry function is not operating.

-Racing timer
The lap timer can record 99 lap times, total time, and average lap time. The timer can also be started automatically by trigger operation. The race time and audible alarm can be set.
The 4PX also has a navigation timer effective during practice runs. The target lap and re-/fueling time are indicated by an audible alarm. An up timer and down timer are also provided.

-Function select dial function
This function assigns functions to dials (digital trim, grip dial, knob). The step amount and operating direction can also be adjusted. Trim positioning at each model call is unnecessary because all the dials are digital.

-Function select switch function
This function assigns functions to 3 switches. The operating direction can also be set.

-Wheel & Trigger position can be changed
The wheel position can be offset by using an accessory APA wheel position offset adapter.
The wheel angle can also be adjusted.
The position of the throttle trigger can be moved forward and backward.

-Trigger brake lever replacement
The trigger brake lever is selected from a narrow nylon type and wide type

-Edit button lock & trim/dial lock functions
Lock functions which prohibit setting and operation by transmitter edit buttons, trim, and dials are provided.

-Left-handed support
The left and right installation direction of the wheel section can be reversed.

-Tension adjustment function
The tension of the steering wheel & throttle trigger springs can be adjusted from the outside.

4PX-Eng-04-Before-P12-31.indd 13 2014/07/18 16:59:26

Set Contents

After opening the box, first check if the contents conform to the following. The contents depend on the set as shown below.

Transmitter	**T4PX**
Receiver	**R304SB or R304SB-E**
Miscellaneous	**Dry battery holder** *Installed in transmitter. **Receiver switch** **Wheel offset adapter(APA)** **Wheel adapter 32deg** **Trigger brake lever (narrow type)** **Miniature screwdriver** **Instruction manual**

- If any of the set contents are missing, or you have any questions, please contact your dealer.

⚠Caution

❗ When using the T4PX in the "Digital servo" type, always use it under the following conditions:

Servos:Futaba digital servo (including BLS Series brushless servos)

Receiver's battery:Matched to the ratings of the receiver and connected digital servo (dry cell battery cannot be used).

Transmitter servo type:Digital servo type (See page 39 for setting method.)

Under other conditions, the set will not operate, or the specified performance will not be displayed even if it operates. In addition, it may cause servo trouble. Futaba will not be responsible for damage, etc. caused by combination with the products of other companies.

In addition, the FSU Fail Safe Unit cannot be used because the system is different. Use the fail safe function of the transmitter.

❗ When using analog servos, always switch the T4PX servo type to the "Analog servo" type.

Transmitter mode:"Analog servo" type (See page 39 for setting method.)

Receiver's battery:Matched to the ratings of the receiver and connected digital servo.

The set cannot operate in the "Digital servo" type. Operation in this type will cause trouble with the servos and other equipment. Digital servos (including BLS Series brushless servos) can also be used in the "Analog servo" type.

❗ Always use only genuine Futaba transmitters, receivers, servos, ESCs (electronic speed controls), Ni-MH/Ni-Cd/Li-ion batteries and other optional accessories.

Futaba will not be responsible for problems caused by the use of other than Futaba genuine parts. Use the parts specified in the instruction manual and catalog.

4PX-Eng-04-Before-P12-31.indd 14 2014/07/18 16:59:27

Transmitter T4PX

Nomenclature

*The switches, dial, and trimmers in the figure are shown in the initial setting position.

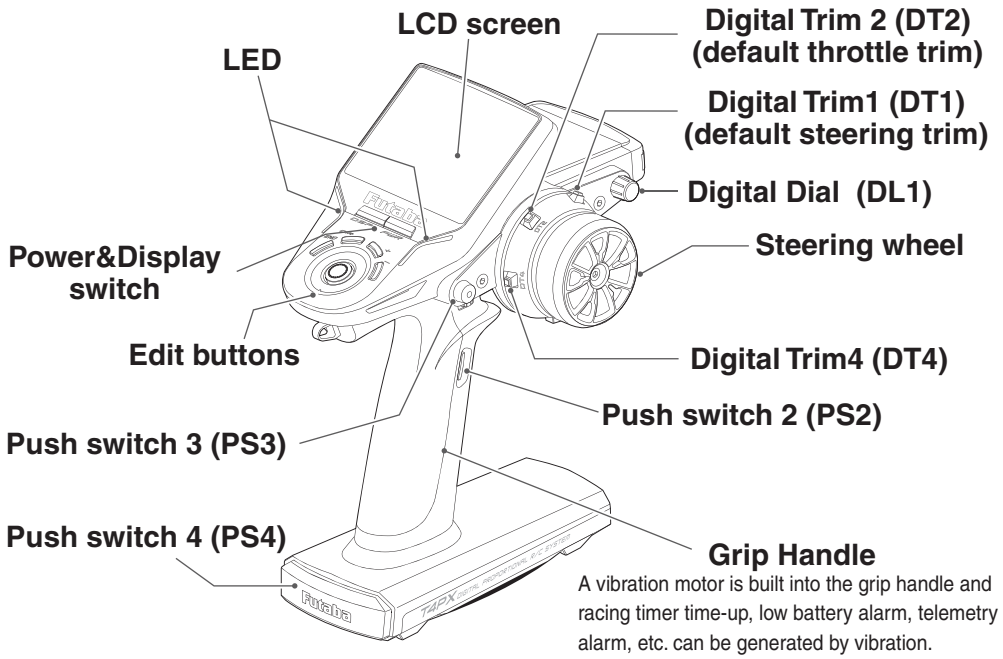

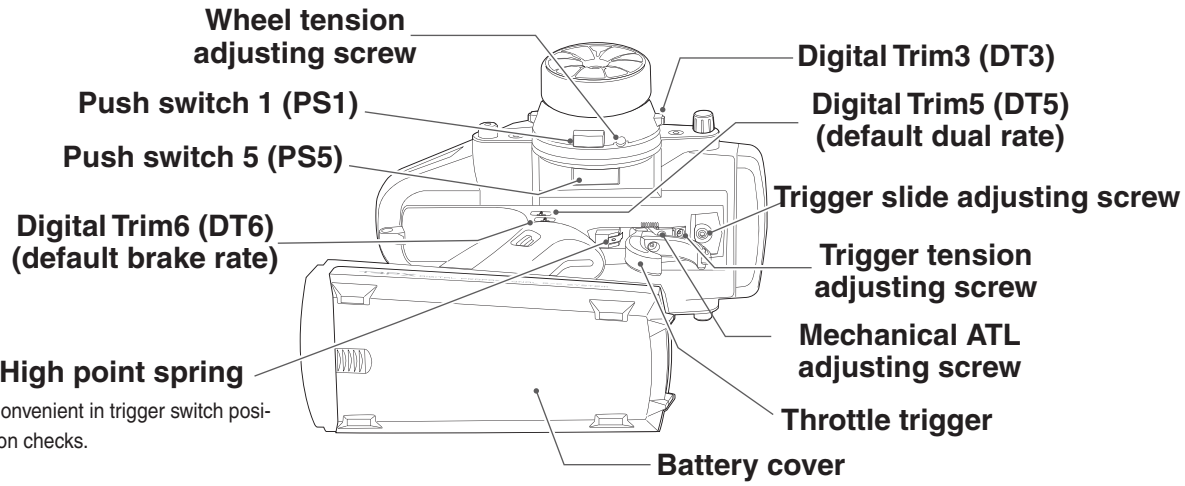

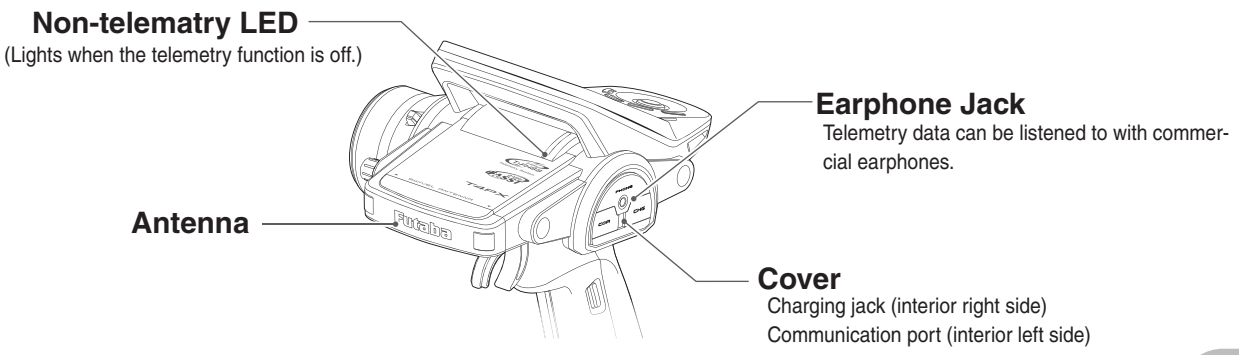

4PX-Eng-04-Before-P12-31.indd 15 2014/07/18 16:59:27

Power & Display Switch

The power switch and display switch are push switches.

When the power switch (PWR) is held down, operation starts by transmitting radio waves. When the display switch is held down, the transmitter side data can be checked and set. When the power is turned off, if the power switch or display switch is held down, the power is turned off. If both switches are pressed simultaneously, the power is turned off quickly.

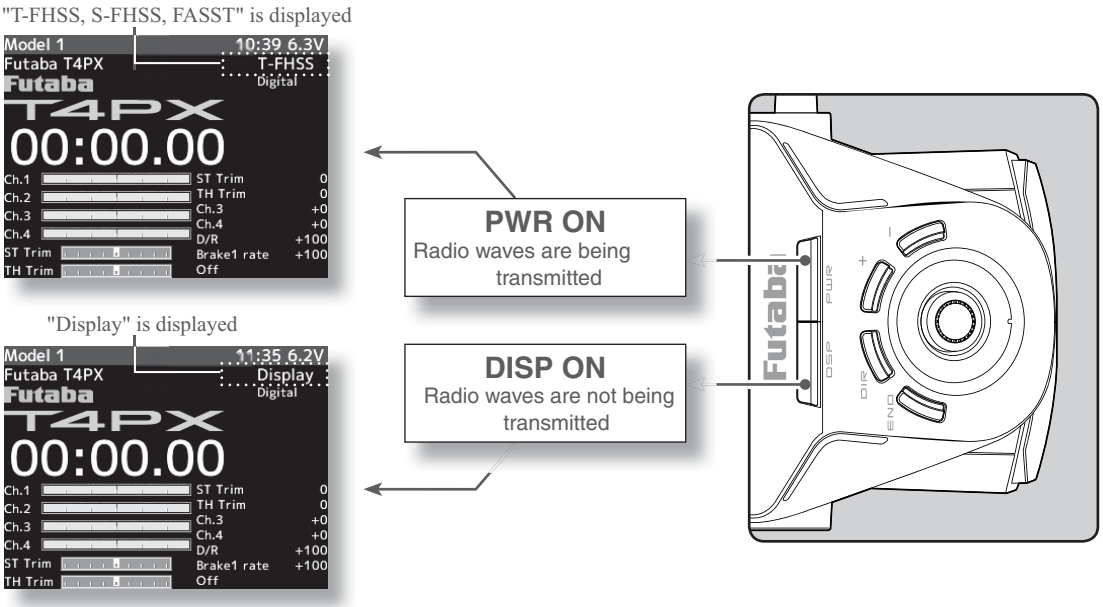

Power Off Forgotten Alarm & Auto Power Off

At T4PX initialization, if steering wheel, throttle trigger, push switch, edit button, or other operation is not performed within 10 minutes, an audible alarm will sound and the message "Warning: Auto power off" will appear.

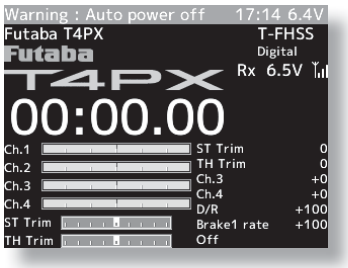

If steering wheel, throttle trigger, push switch, edit button or other operation is performed, the alarm is reset. Also turn off the power when the transmitter is not in use. If the alarm is not reset, the auto power off function will automatically turn off the power after 5 minutes. If you do not want to use this alarm and the auto power off function, they can be disabled by system setting (p.148).

Low Battery Alarm

If the transmitter battery voltage drops below the usable range, an audible alarm will sound and "Low battery" will be displayed. Since the usable range of LiFe and NiMH batteries and LiFe batteries is different, the power supply used must be set by system setting. If the battery goes dead while running (cruising), since there is the danger of collision, immediately recover the vehicle (boat) and stop running (cruising).

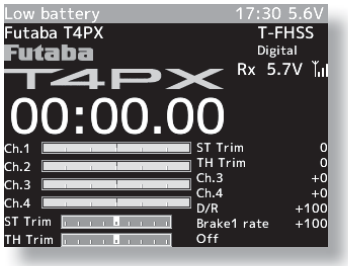

⚠Warning

❗ When a low battery alarm is generated, cease operation immediately and retrieve the model.

If the battery goes dead while in operation, you will lose control of the model.

4PX-Eng-04-Before-P12-31.indd 16 2014/07/18 16:59:28

Digital Trim Operation (Wheel)

(Initial settings: DT1: Steering trim, DT2: Throttle trim, DT3: Channel 3, DT4: Channel 4)

Operate digital trim by tilting each trim lever up and down or left and right. The current trim position is displayed on the LCD screen. However, operation is impossible when trim/dial lock (P21) is set.

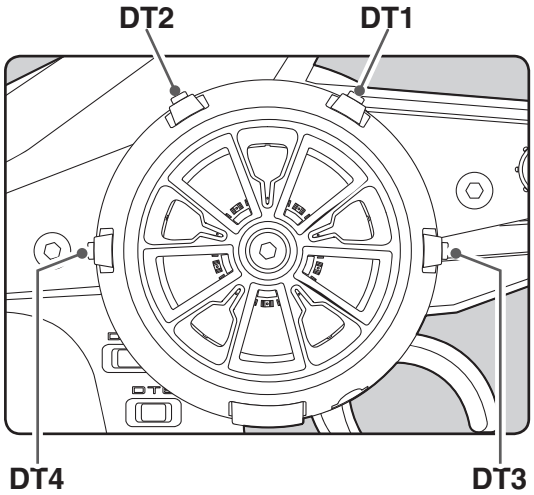

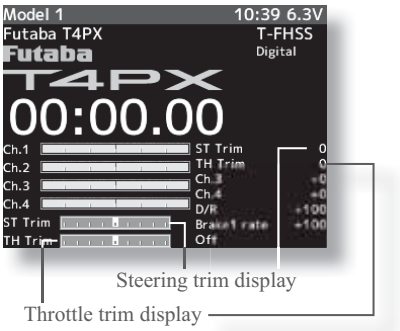

- Each step is indicated by a tone.
- When the trim exceeds the maximum trim adjustment range, the beep will change and the servo will not move any farther. Return to the neutral position (center) by pressing both the push button switches simultaneously for about one second.
- Reset when tilted to the transmitter body side while pressing each trim button in the wheel center direction.

Trim Operation

With the center trim feature, trim adjustments have no effect on the maximum servo travel. This prevents the linkages from binding when adjustments are made.

Digital Trim Operation (Grip)

(Initial setting: DT5; Steering D/R, DT6; Brake rate)

Operate the lever by turning them. The current set value is displayed on the LCD screen. However, this operation cannot be performed when the trim/dial lock (p.21) function is set.

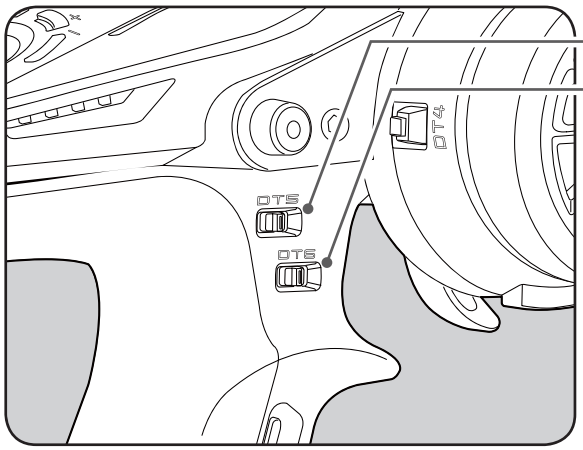

Steering dual rate DT5

Brake rate (Brake1) DT6

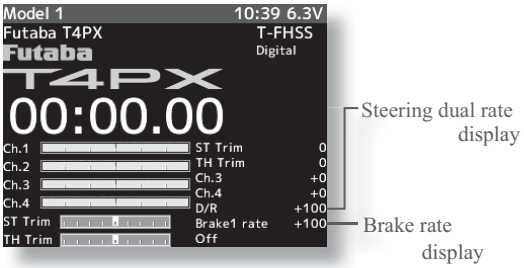

- Each step is indicated by a tone.
- When the trim exceeds the maximum trim adjustment range, the tone will change pitch and the servo will not move any farther.

4PX-Eng-04-Before-P12-31.indd 17 2014/07/18 16:59:28

Mechanical ATL Adjustment

Make this adjustment when you want to decrease the stroke of the brake (back) side of the throttle trigger for operation feel.

Adjustment

1 Using a 1.5mm hex wrench, adjust the trigger brake (reverse) stroke. (The screw moves the throttle trigger stopper.)

- When the screw is turned clockwise, the stroke becomes narrower. Adjust the stroke while watching the screw.

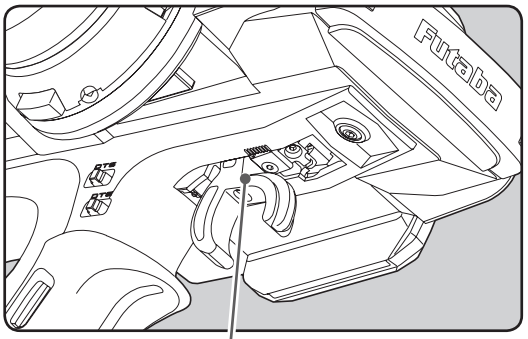

Mechanical ATL adjusting screw

Note:

Once you have changed the mechanical stroke on the brake side, be sure to adjust the scale of the throttle channel accordingly by using the "Adjuster Function" (p.128).

Due to this change, you also need to adjust in most cases the travel of the throttle servo by using "Data Setting."

Wheel & Trigger Tension Adjustment

Make this adjustment when you want to change the wheel or trigger spring's tension.

Adjustment

1 Using a 1.5mm hex wrench, adjust the wheel spring tension by turning the screw inside the adjusting hole in the arrow direction.

- The spring is set to the weakest tension at the factory.
- When the adjusting screw is turned clockwise, the spring tension increases.

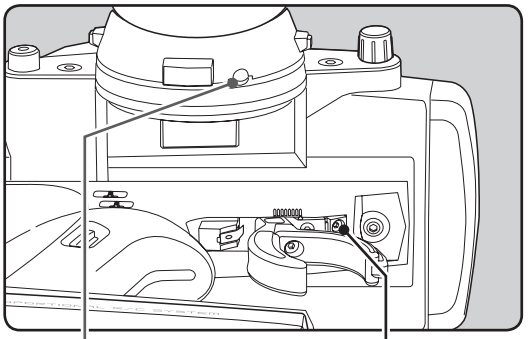

Wheel tension adjusting screw **Trigger tension adjusting screw**

Note:

The adjustment range is up to 7 to 8 turns from the fully tightened (strongest) position. If turned farther than this, the adjusting screw may fall out.

4PX-Eng-04-Before-P12-31.indd 18 2014/07/18 16:59:28

Trigger Slide Adjustment & Remove The High Point Spring

The throttle trigger position can be moved forward and backward.

Adjustment

1 Using a 2.0mm hex wrench, loosen the trigger slide mounting screw by turning it slightly counterclockwise.

Always loosen this screw.

Note:

> If the trigger slide screw is turned too much, the screw may fall out.

2 Adjust the trigger slide position within the marked range.

The high point spring can be removed by moving to the fastest from the grip.
When the high point spring was removed, perform throttle side correction by adjuster function (p.152).

3 Retighten the mounting screw loosened at step 1 and fasten the trigger slide.

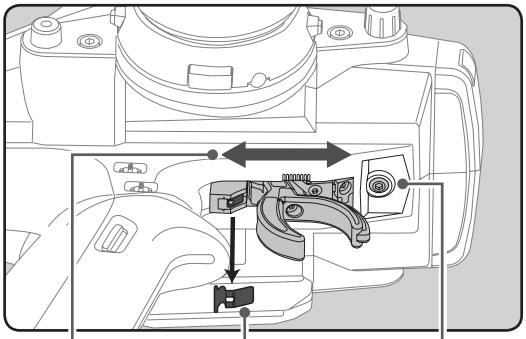

Please adjust it within the range of mark.

Trigger slide mounting screw

High point spring can be removed with radio pliers, etc.

Battery Replacement Method (4 AA Size Batteries)

Load the four batteries in accordance with the polarity markings on the battery holder.

Battery Replacement Method

1 Remove the battery cover from the transmitter by sliding it in the direction of the arrow in the figure.

2 Remove the used batteries.

3 Load the new AA size batteries. Pay very close attention to the polarity markings and reinsert accordingly.

4 Slide the battery cover back onto the case.

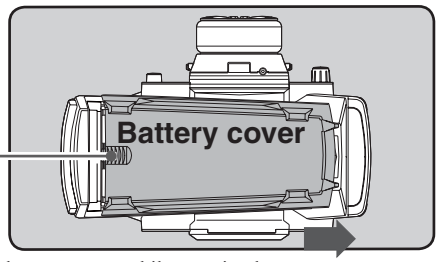

Slide battery cover while pressing here.

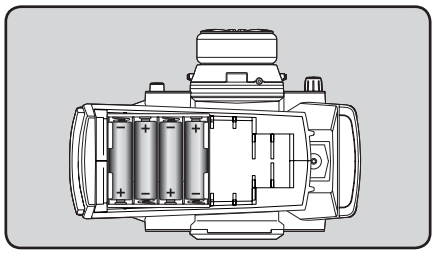

⚠Caution

⊘ When running (cruising), do not use the dry cell battery box at the transmitter.

The accessory dry cell battery box is for performance checks. Do not use it for other than performance checks. The dry cell batteries will be separated from the battery box contacts by shock and the power may be cut off. There is the danger of collision if the power is cut while running (cruising). The use of Futaba genuine NiMH or LiFe batteries is strongly recommended.

4PX-Eng-04-Before-P12-31.indd 19 2014/07/18 16:59:29

When Using The Optional Battery

When using an optional rechargeable battery, replace the battery as described below.

-Always use the optional HT5F1800B, FT2F1700BV2, FT2100BV2 rechargeable battery.

-The type of power source used must be set by system setting (p.148).

-When the transmitter will not be used for a long time, remove the battery.

Battery Replacement Method

1 Refer to the previous description and remove the transmitter battery cover.

2 After removing the dry cell battery box from the transmitter, disconnect the connector.

3 Insert the connector of the new battery and load the new battery into the transmitter.

4 Finish by installing the battery cover.

⚠Caution

❗When closing the battery cover, be careful that the battery cover does not pinch the battery lead wires.

Shorting of the battery lead wires may lead to fire and abnormal heating and cause burns or fire disaster.

When Charging For The Optional Battery

Charge Of A NiMH Battery

(Example: When using the HT5F1800B with the special charger)

1 Plug the transmitter cord of the special charger into the charging jack on the rear of the transmitter.

2 Plug the charger into an AC outlet.

3 Check that the charging LED lights.

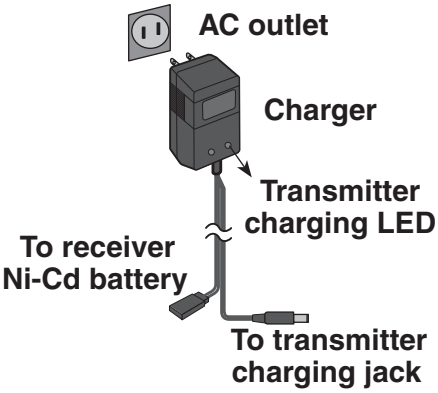

Charge Of A LiFe Battery

(Example: When using the FT2F1700BV2/2100BV2 with the special charger)

1 Remove the battery cover.

2 Disconnect the battery from the T4PX.

3 Balance charging cannot be done through the transmitter, you must remove the LiFe battery to do this.

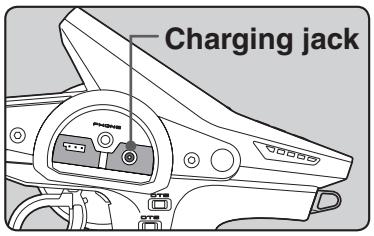

⚠Warning

⊘ Never plug it into an outlet other than the indicated voltage.

Plugging the charger into the wrong outlet could result in an explosion or fire.

⊘ Do not insert and remove the charger when your hands are wet.

It may cause an electric shock.

❗ Always use the special charger or a quick charger for digital proportional R/C sets to charge a digital proportional R/C set Ni-MH or LiFe battery.

Overcharging a Ni-MH battery can result in burns, fire, injuries, or loss of sight due to overheating, breakage, or electrolyte leakage.

4PX-Eng-04-Before-P12-31.indd 20 2014/07/18 16:59:29

⚠Caution

⊘ When the charger is not in use, disconnect it from the AC outlet.

Do this to prevent accidents and to avoid overheating.

❗ If the power is turned on during charging, an RF error will be displayed and an audible alarm will sound. Immediately turn off the power. (See p.161)

Display When Power Switch Is Turned On

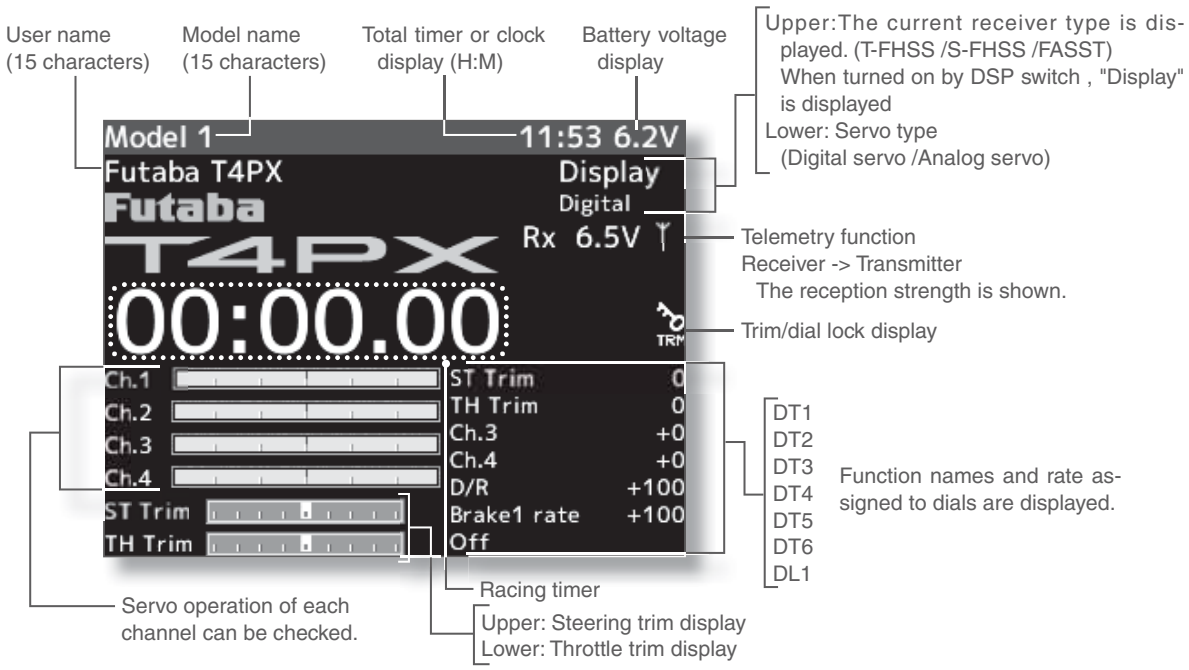

Trim/Dial Lock

T4PX setup and operation by digital trim DT1, DT2, DT3, DT4, DT5 and DT6 and dials DL1 can be prohibited.

Setting

1 When the (-) button is pressed for about 1 second at the initial screen, a confirmation beep is generated and the trim/dial lock display mark appears on the screen.

Clearing

1 Edit button lock and trim/dial lock can be cleared in the initial screen state by the same method as the setting described above. (The trim/dial lock display disappears from the screen.)

Total Timer

The total timer shows the accumulated time from last reset.

The total time does not change even when the model changes.

Reset method

1 In the initial screen state, hold down the (+) and (-) buttons simultaneously for 1 second.

* The total timer display counts up from 1 minute to 99hours 59 minutes.

4PX-Eng-04-Before-P12-31.indd 21 2014/07/18 16:59:30

Changing Wheel Position And Modifying For Left-hand Use

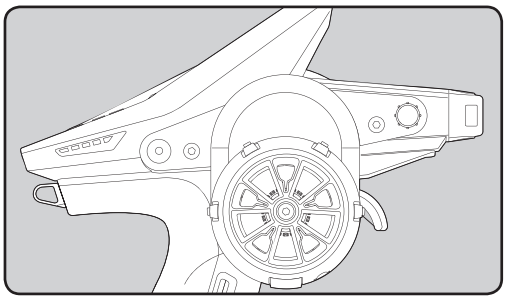

Changing the wheel position

The wheel position can be offset by using the accessory APA wheel position offset adapter.

(See page 23 for the modification method.)

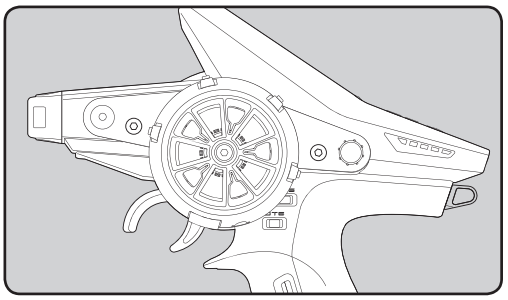

Modifying for left-hand use

The wheel section left and right installation direction can be reversed.

(See page 25 for the modification method.)

Angle can be adjusted

The angle can be finely adjusted by adjusting the steering wheel unit installation. (See the modification method on the next page for the adjustment details.)

The operating angle of the wheel can be adjusted

The operating angle of the wheel can be changed from 34 deg to 32 deg by installing the 32 deg wheel adjuster. (See "Exchange procedure to wheel adaptor 32 deg" below for the replacement procedure.

If you install the 32 deg wheel adapter, be sure to adjust the scale of the steering channel accordingly by using the "Adjuster Function" (p.152).

Exchange procedure to wheel adaptor 32 deg

• Obtain 2.5mm hex wrenchs./ Remove the battery.

1 Hold the wheel and remove the screw.
(Using a 2.5 mm hex wrench.)

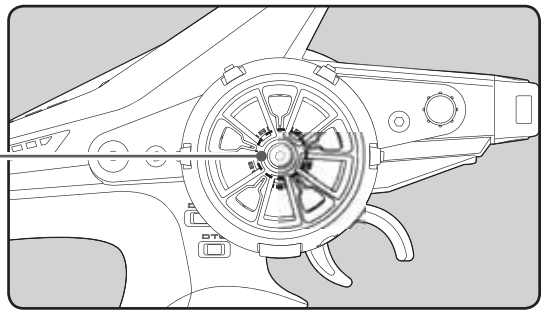

2 Pull off the wheel and wheel adapter.

3 Install the steering wheel and the 32 deg wheel adapterusing the screw.
(Using a 2.5 mm hex wrench.)

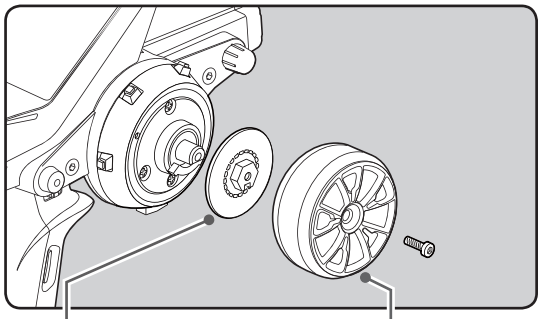

4PX-Eng-04-Before-P12-31.indd 22 2014/07/18 16:59:30

Installing the accessory APA steering wheel offset adapter

- Obtain 2.5mm hex wrenchs./ Remove the battery.
- The length of the screws used at each part differs. When reassembling the steering wheel unit, always use the specified screws.

1 Remove the 2 steering wheel unit mounting screws.

(Using a 2.5 mm hex wrench.)

Remove the 2 mounting screws completely from the transmitter body.

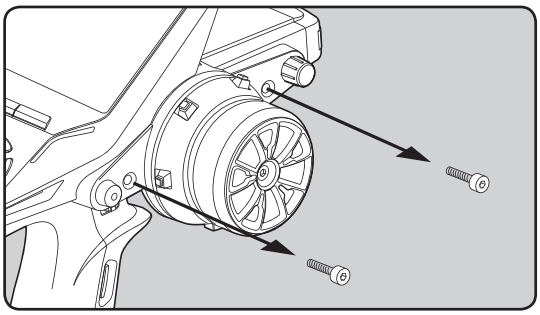

2 Being careful that the wiring is not too tight remove the steering unit.

- Remove the steering unit slowly so that the internal wiring is not pulled unreasonably.
- Removal is easy if performed in A→B order.

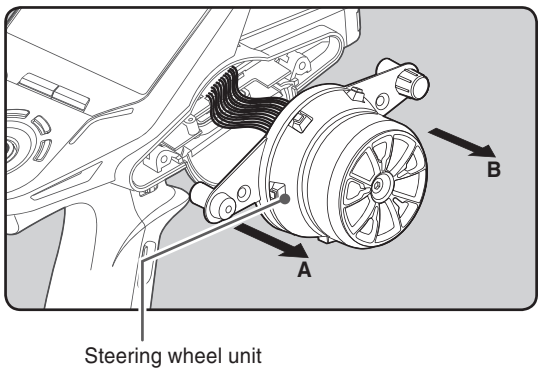

3 Remove the 3 connectors from the PC board.

Remember the direction of the connectors.

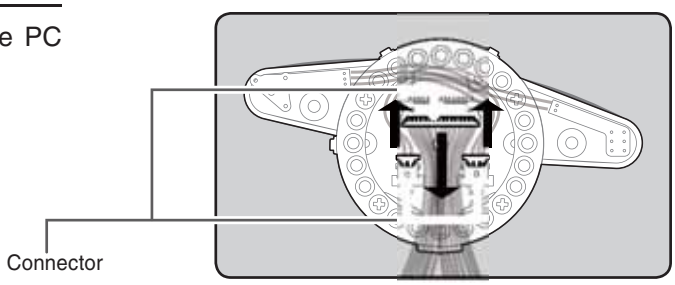

4 Using a Phillips screwdriver, remove the 4 screws (2.5x15mm tapping screw) mounting the wheel unit and switch unit.

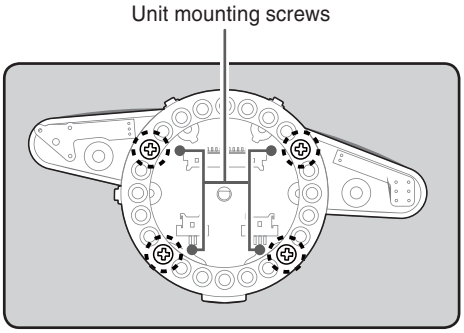

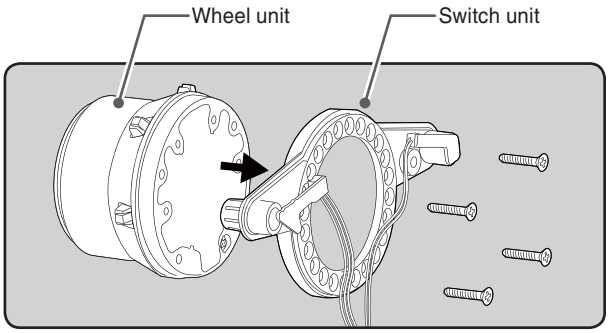

4PX-Eng-04-Before-P12-31.indd 23 2014/07/18 16:59:31

5 Pass the wiring from the transmitter and the charge unit wiring through the hole in the APA as shown in the figure and insert the 3 connectors at their original positions on the wheel unit PC board.

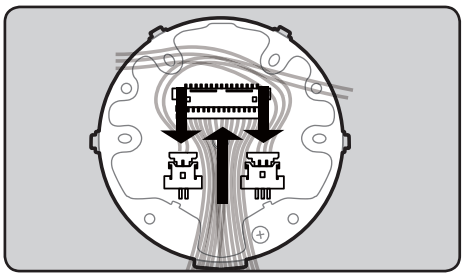

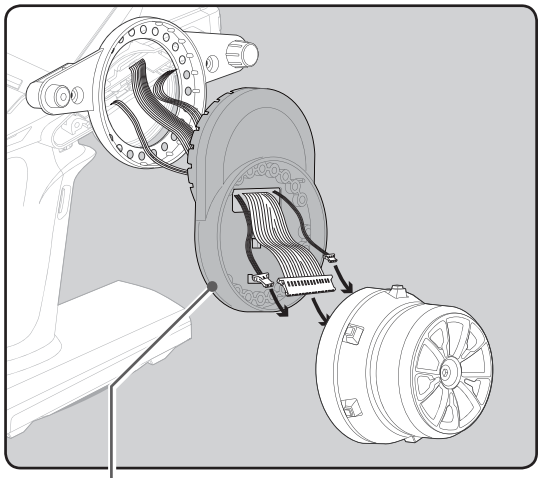

6 Using a Phillips screwdriver fasten the wheel unit and APA at the desired angle using the 2.5x19 tapping screws in the accessory bag. Be careful that the screw length is correct. Be careful that the wiring does not get pinched. The angle can be adjusted, but check the marking point on the wheel unit and install the screws.

Screws can be installed at 4 places, but installation at 4 places may be impossible due to the wheel unit mounting angle.

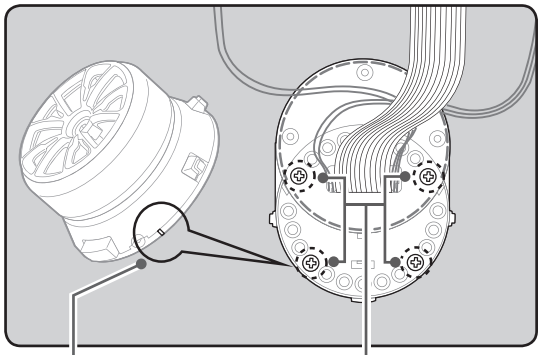

7 Using a Phillips screwdriver fasten the switch unit and APA. Use the 2.5x10mm tapping screws in the accessories bag. Next, install the APA rear cover. Be careful that the length of the screws is correct.

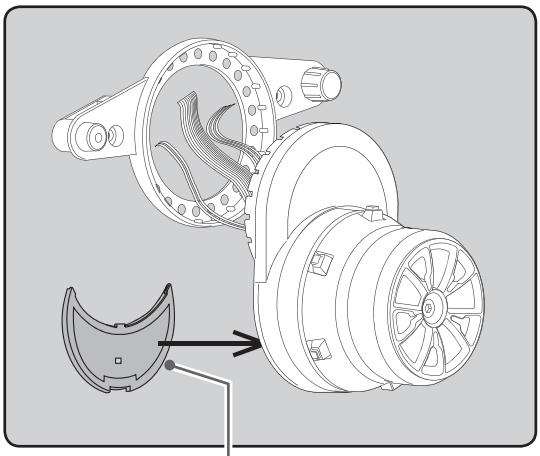

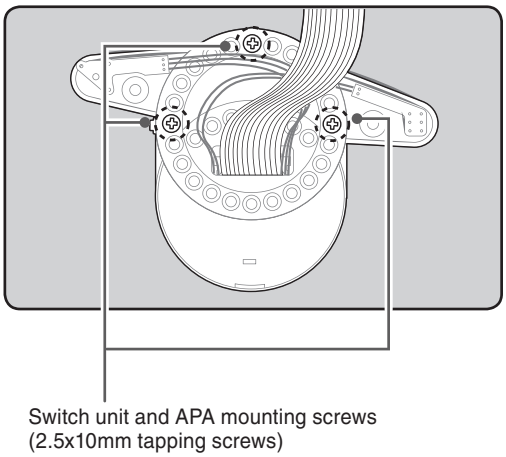

4PX-Eng-04-Before-P12-31.indd 24 2014/07/18 16:59:32

8 Install the assembled steering unit to the transmitter body.

Install slowly so that the wiring is not pinched.
Installation is easy if inserted in A→B order.

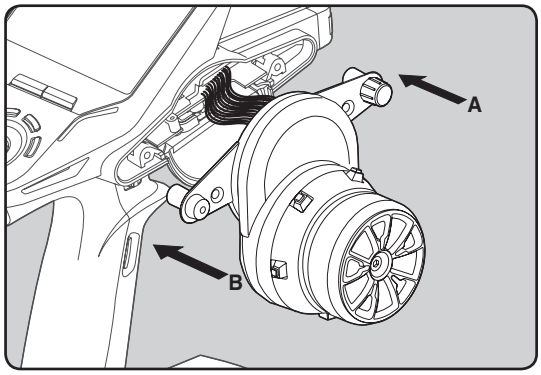

9 Install the assembled steering wheel unit and APA to the transmitter using the screw (3.0x12mm cap tapping screw) supplied.

(Using a 2.5 mm hex wrench.)

Steering wheel unit mounting screws

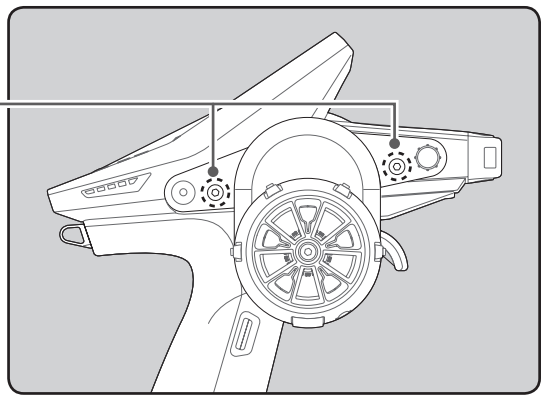

Modifying for left-hand use

- Obtain 2.5mm hex wrenchs.
- Refer to 1-2 (P24) of the APA for the wheel position change installation method and remove the wheel unit. Only remove the 15WIRE connector. (See p.26)

1 Slowly pull out the PS5 switch cap and mounting plate in the arrow direction.

Be careful that the switch body does not get caught and damaged.

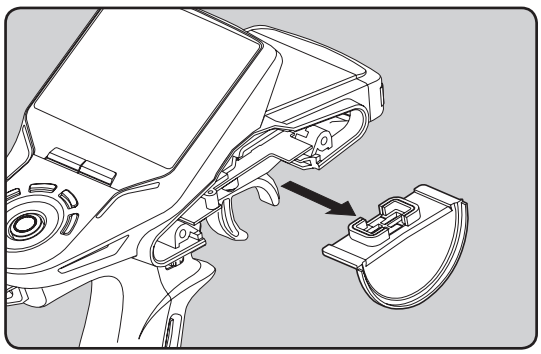

2 Next, remove the opposite side charge unit. Refer to the figure and secure the arrow part with tape, etc.

The tape is removed at the end of left-hand modification.

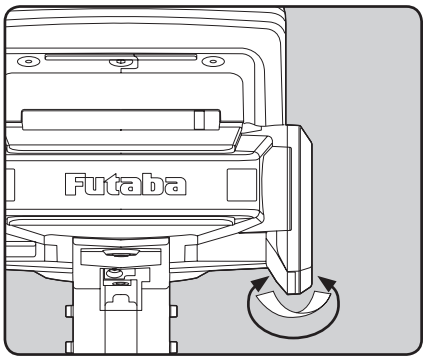

4PX-Eng-04-Before-P12-31.indd 25 2014/07/18 16:59:32

3 Using a 2.5mm hex wrench, remove the mounting screws (3.0x1.2mm cap) of the opposite side charge unit.

Remove the 2 mounting screws completely from the transmitter body.

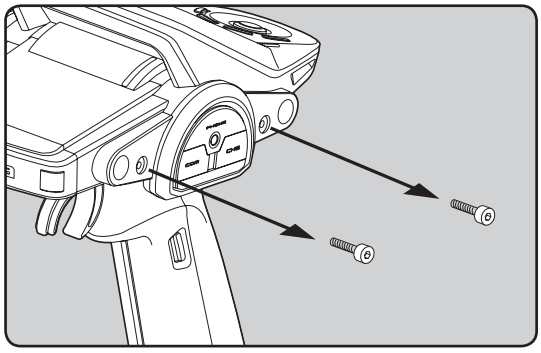

4 Being careful that the wiring is not too tight slowly remove the charge unit. Remove the connector from the PC board.

Remember the direction of the connector.

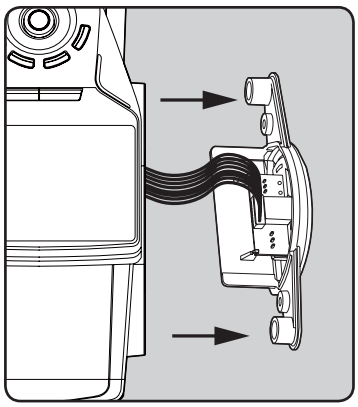

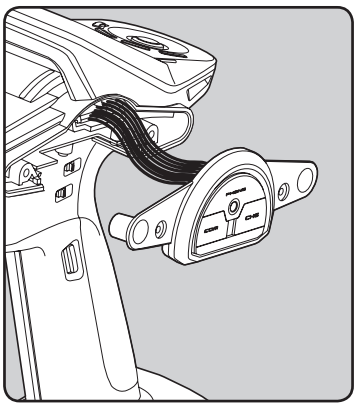

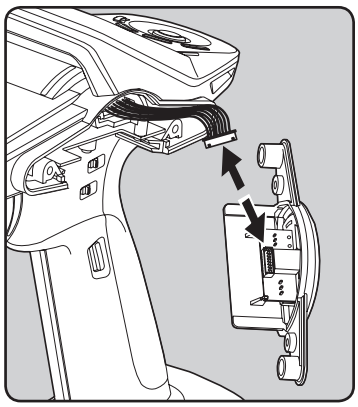

5 Interchange the 15WIRE wiring connector of the steering unit and the 8WIRE wiring connector of the charge unit, while being careful that the wiring is not too tight.

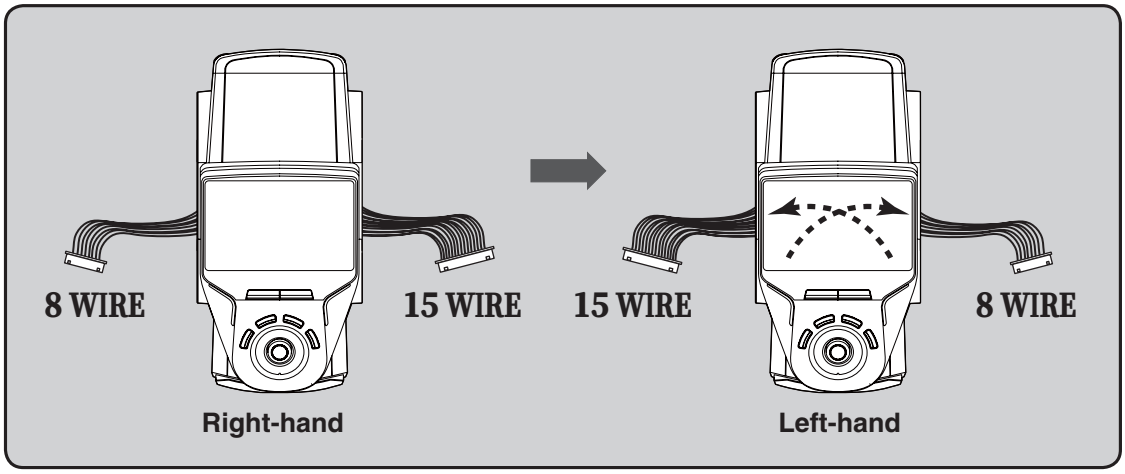

4PX-Eng-04-Before-P12-31.indd 26 2014/07/18 16:59:33

6 Insert the 8WIRE wiring connector onto the charge unit connector, and install the charge unit and transmitter body with the mounting screws.

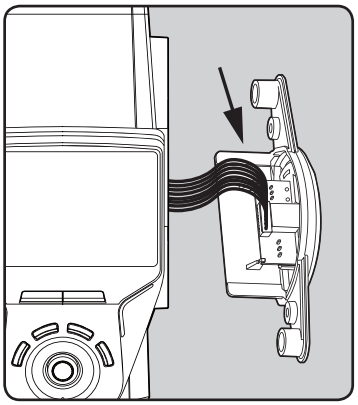

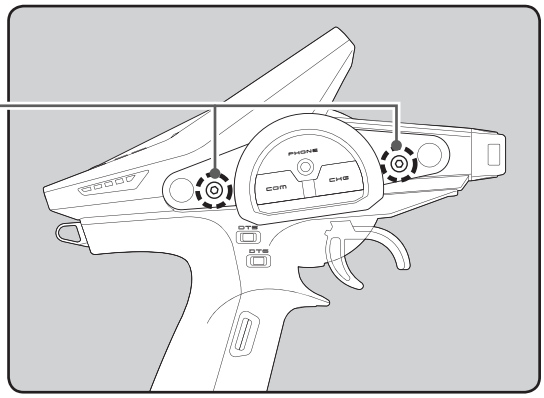

7 Install the PS5 switch cap and mounting plate removed at step 1 at the opposite side of the transmitter body.

Be careful that the switch body does not get caught and damaged.

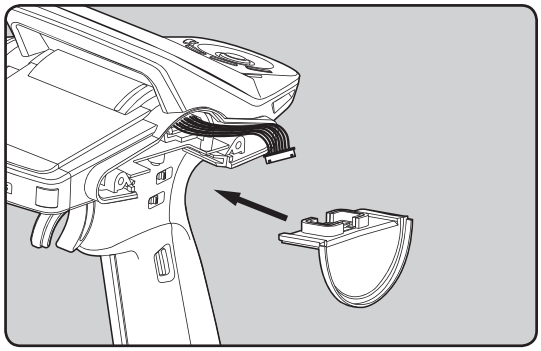

8 Insert the 15WIRE wiring connector onto the steering unit, and install the steering unit to the transmitter body.

Install slowly so that the wiring does not get pinched.
Installation is easy when inserted in A→B order. (Figure at the right)

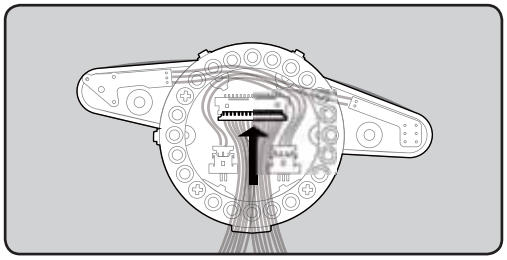

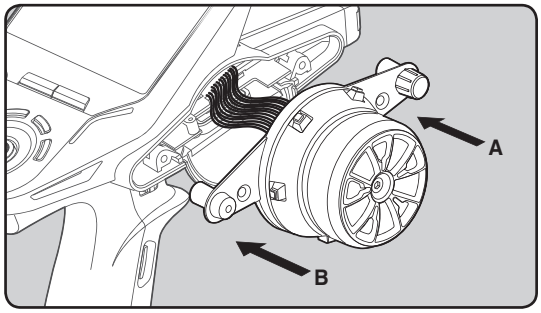

9 Install the assembled steering wheel unit and APA to the transmitter using the screw (3.0x12mm cap tapping screw) supplied.

(Using a 2.5 mm hex wrench.)

Peel the tape installed at step 2.

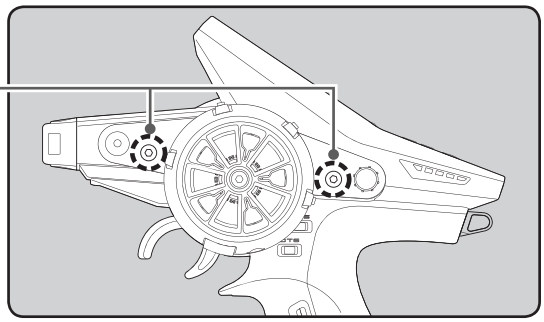

4PX-Eng-04-Before-P12-31.indd 27 2014/07/18 16:59:34

Using the optional angle spacer

The wheel mounting angle can be changed by using the optional angle spacer.

Three 2.5x10mm tapping screws are supplied with the angle spacer.
When using and not using the APA, refer to the following installation.
Obtain a Phillips screwdriver. Be careful of the length of the screws used.
Actually, since there is wiring, the wheel is assembled by passing the screws through each part.

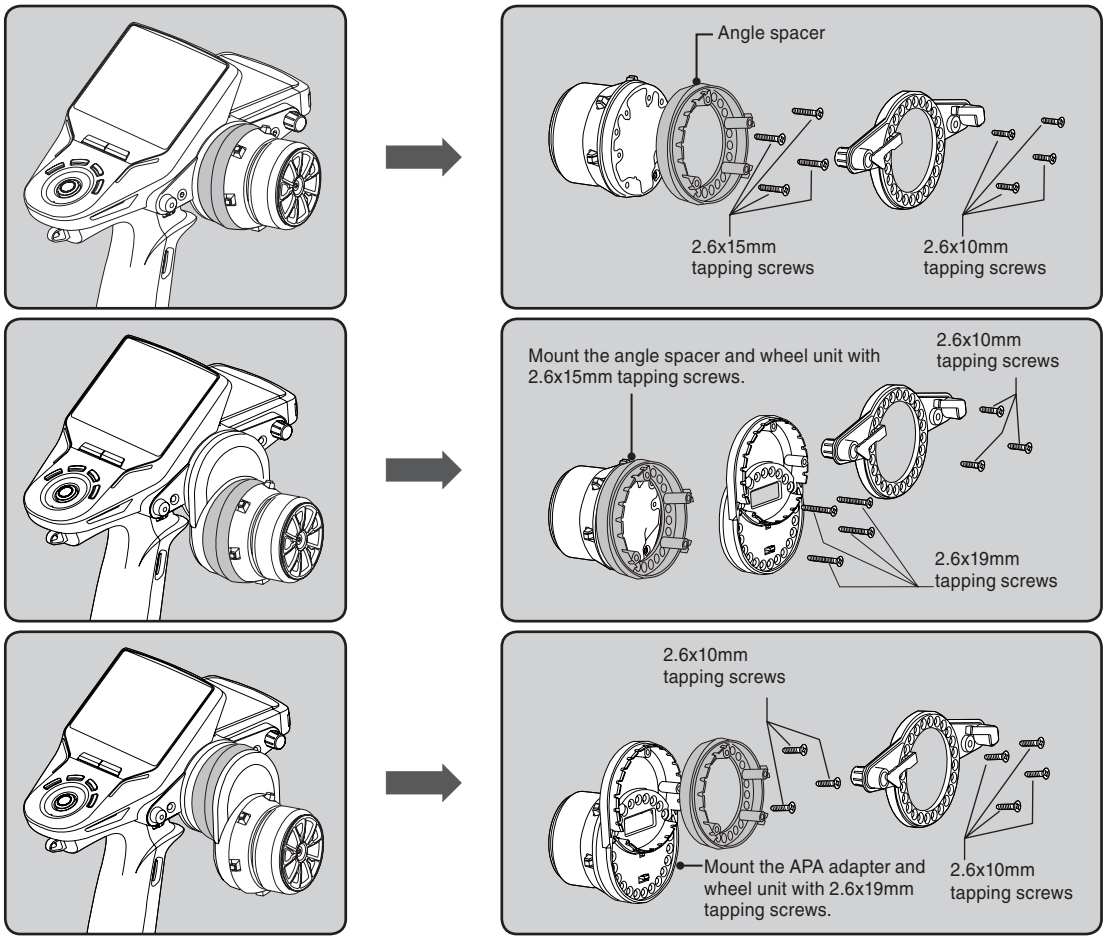

Trigger brake lever replacement

The trigger brake lever is selected from a narrow nylon type and wide type. (Narrow type is installed at the factory.)

*When the brake lever was changed, perform throttle side correction by adjuster function (P152).

Brake lever replacement

Obtain a 1.5mm hex wrench. Remove the battery from the transmitter.

1 Hold the trigger, remove the brake lever mounting screw using the 1.5mm hex wrench, and remove the brake lever.

2 Using the 1.5mm hex wrench install the wide type brake lever with the brake lever mounting screw.

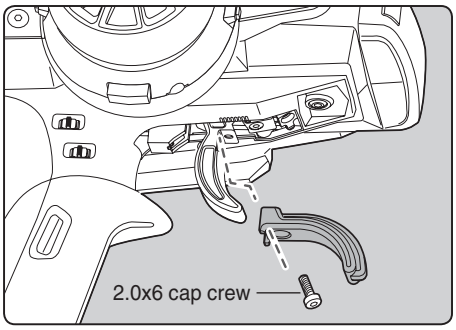

4PX-Eng-04-Before-P12-31.indd 28 2014/07/18 16:59:35

Non-telemetry LED (telemetry OFF sign)

When the telemetry function is inhibited by race regulations, a special LED lights when the telemetry function is OFF to confirm that the telemetry function is not operating.

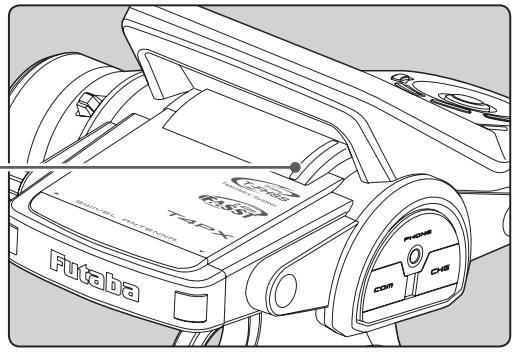

Non-telemetry LED
(Lit when telemetry function is OFF)

Handling the antenna and card slot and receiver

About T4PX Antenna

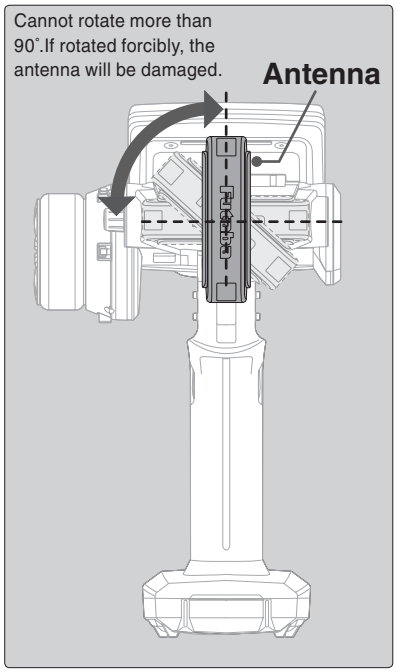

Antenna Moving Range

If the antenna is set to the 90˚ vertical position, the range of the radio waves may be greater than in the horizontal position. (Different depending on the conditions)

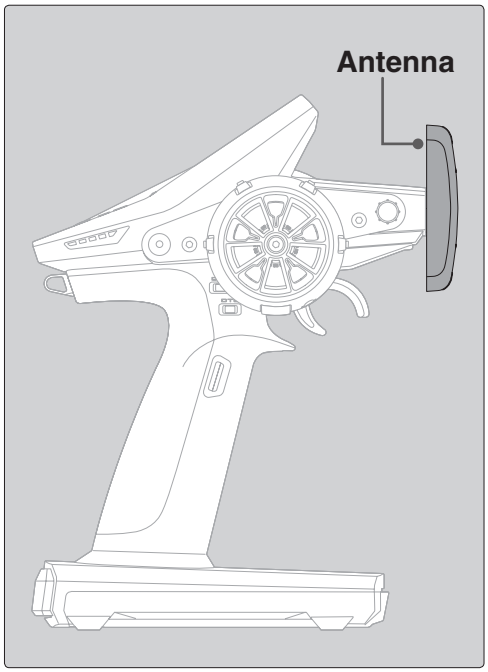

⚠Caution

⃠Please do not grasp the transmitter's antenna during drive.

Doing so may degrade the quality of the RF transmission to the model.

⃠The antenna position can be changed in the range as shown in figure. However, please do not apply unnecessary force or shock.

The internal cable may be damaged; thus transmitting distance decreases and it may cause malfunction.

There might be a small glitch when the antenna of the transmitter is brought close to servos, ESCs or other peripheral devices.

This is not an issue but please keep this symptom in mind, especially when setting-up.

4PX-Eng-04-Before-P12-31.indd 29 2014/07/18 16:59:36

Handling an microSD card (commercial product)

T4PX model data and telemetry log data can be saved by using a commercial microSD card. When T4PX software updates are released, the microSD card can also be used to make the update.

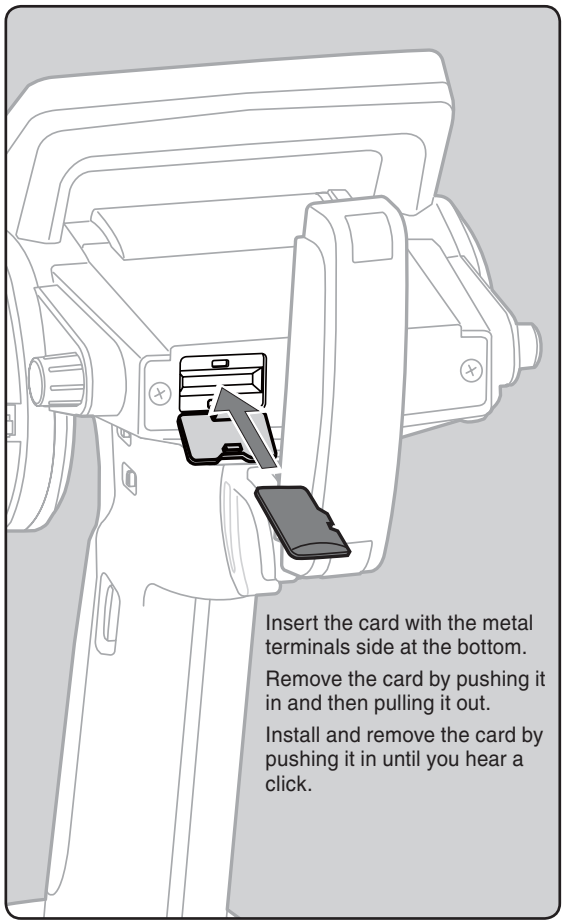

(Commercial product)

SD standard and SDHC standard microSD cards

(Some models may not be operated by card.)

*The data in the memory card cannot be guaranteed regardless of the contents and cause of trouble or damage. Always back-up the valuable data in the memory card.

⚠Caution

❗ Always insert and remove the microSD card in the state in which the transmitter power is off.

If the microSD card is removed while being accessed (read or write), the card itself and the data may be destroyed.

❗Do not install and remove the microSD card with the microSD card slot facing your face.

If you remove your fingers quickly, the microSD card may fly out and strike your face and is dangerous.

⊘Since the microSD card is a precision device, do not subject it to unreasonable force or shock.

-When a microSD card is installed in the T4PX transmitter, a folder called "Futaba" is created. Folders called "LOG" and "MODEL" are created in this folder. The "MODEL" folder stores the model data and the "LOG" folder stores the telemetry log data. When "Save screen" is set at the push switch by switch setting, an image of the screen to be displayed on the T4PX is saved by that switch. The saved image is stored in a folder call "PICTURE". A "PICTURE" folder is not created until "Save screen" is set.

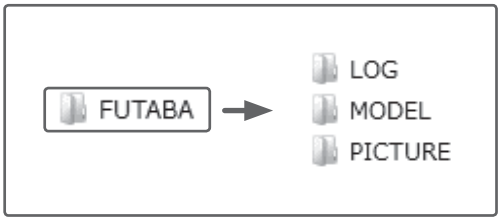

-The telemetry log data recorded on the microSD card can be converted to CSV format by the telemeter log converter released on our home page. When copying or moving a log file, always select both .FLI and .FLD file.

4PX-Eng-04-Before-P12-31.indd 30 2014/07/18 16:59:36

Receiver Terminology

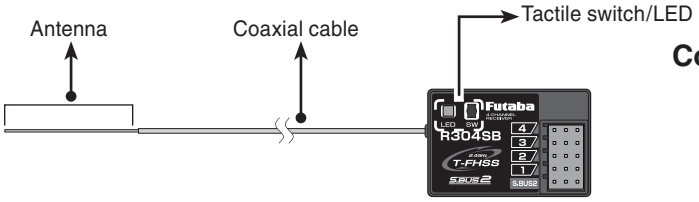

Connectors

4	:CH4 servo(CH4)
3	:CH3 servo(CH3)
2	:Throttle servo(CH2)
1	:Steering servo(CH1)
S.BUS2	:Power /S.BUS2 connector

The receiver power supply can be connected to the S-BUS2 connector or each of CH1-4.

Receiver Installation

Install the R304SB receiver on the car as follows:

The operating range may become shorter, depending on where the receiver and the antenna are mounted.

⚠WARNING

⊘ Do not cut or bundle the receiver antenna wire.

⊘Do not bend the coaxial cable. It causes damage.

❗Install the antenna in the higher place as shown in the figure.

❗Put the antenna in the antenna tube to protect it.

❗Keep the antenna as far away from the motor, ESC and other noise sources as you possibly can.

❗Wrap the receiver with something soft, such as foam rubber, to avoid vibration. If there is a chance of getting wet, put the receiver in a water-proof bag or balloon.

❗The antenna is installed under the plate (top) of the R304SB-E receiver. Do not place wiring or other objects on the plate. The receiving range may be affected.

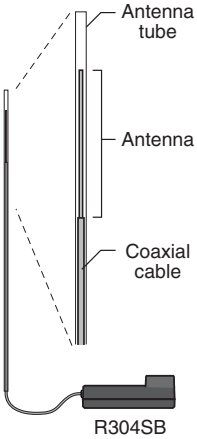

⚠Caution

❗Always use R304SB/R304SB-E under the following conditions:

Battery :Power requirement Rated voltage 4.8~7.4V (dry cell battery cannot be used) / 3.5 to 8.4V useable
Matched to the ratings of the receiver and connected servo.

Transmitter's receiver type :"T-FHSS

Transmitter's receiver type: Digital servo type :Futaba digital servo

Transmitter's receiver type: Analog servo type :Futaba all servo

Under other conditions, the set will not operate, or the specified performance will not be displayed even if it operates. In addition, it may cause trouble with servos and other equipment. Futaba will not be responsible for damage, etc. caused by combination with the products of other companies.

Transmitter mode setting

Set the transmitter to the "T-FHSS" mode. See page 36 for a description of the setting method.

Note: However, digital servos (including BLS Series brushless servo) can only be used in the "Digital servo type".

4PX-Eng-04-Before-P12-31.indd 31 2014/07/18 16:59:37

Receiver And Servo Connections

Connect the receiver and servos as shown below. Connect and install the receiver and servos in accordance with "Installation Safety Precautions" on the next page.

The figure shown below is an example. The method of connecting the motor controller to the motor and battery depends on the motor controller used. Purchase the motor controller and servos separately. The receiver also depends on the set.

When using the DSC cord with a gasoline engine car, connect the optional double extension cord to B/C of the receiver and the DSC cord and receiver switch to the opposite side connector.

Installation When An Electronic Speed Control Is Used

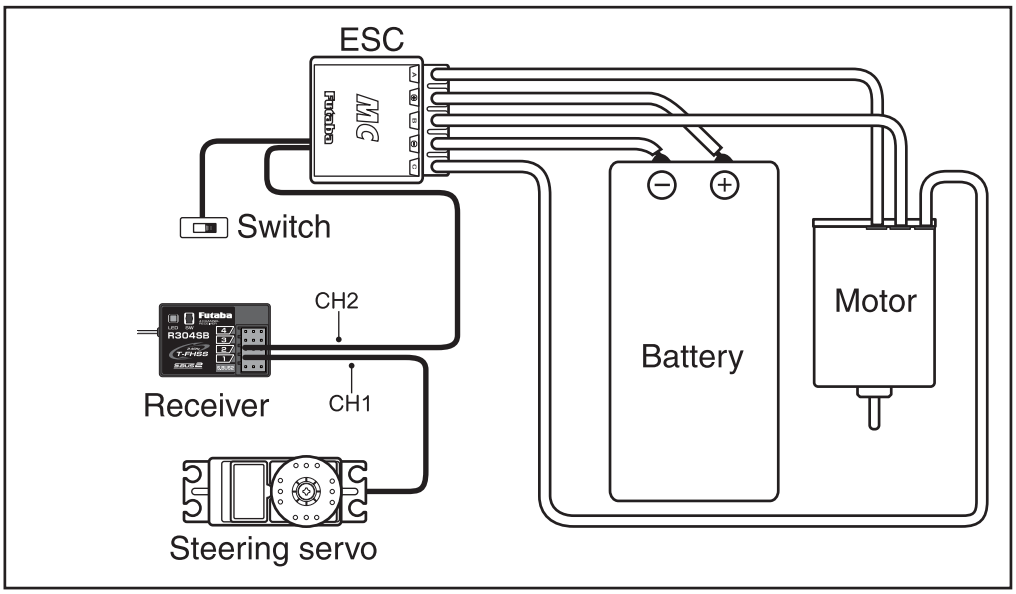

Installation For Gas Powered Models

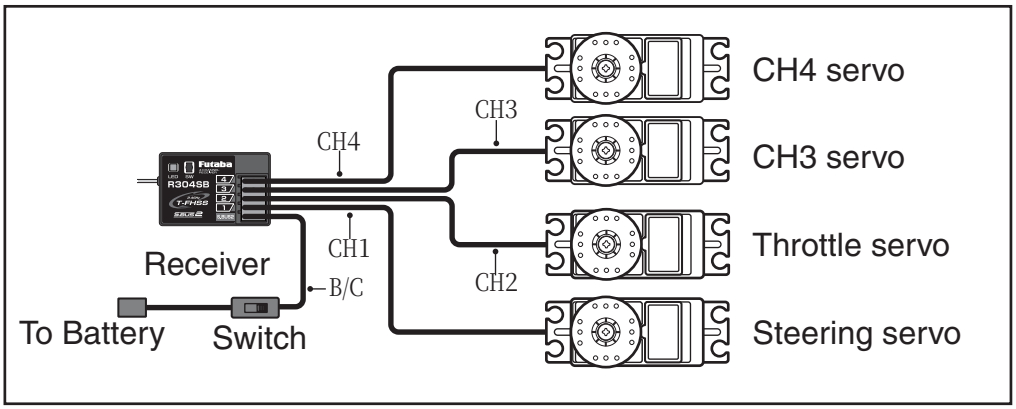

4PX-Eng-05-Instllation-P32-35.indd 32 2014/07/18 15:52:44

Installation Safety Precautions

⚠Warning

Receiver (receiver antenna)

⊘ Do not cut or bundle the receiver antenna wire.
⊘ Do not bundle the receiver antenna wire together with the motor controller lead wire.
⊘ Keep the receiver antenna wire at least 1cm away from motor, battery, and other wiring carrying heavy current.
⊘ Do not use a metal receiver antenna holder on a plate made of metal, carbon, or other conductive material.
❗ Install the receiver antenna holder as closely as possible to the receiver.

If the antenna wire is cut, bundled, or routed near a noise source, the receiving sensitivity will drop, the running (cruising) range will decrease, and you may lose control of the model.

*Noise is transmitted through metal, carbon, and other conductive material, so keep the receiver antenna wire away from such parts.

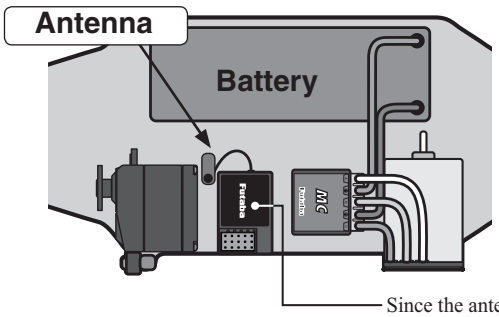

Install the receiver as far away as possible from the battery, motor controller, motor, silicon cord and other noise sources. Keep it away from the antenna wire, in particular.

Since the antenna of built-in antenna receivers is installed under this, do not place wiring or other objects on it.

Receiver Vibration-proofing / Waterproofing

(Car)
❗ Vibration-proof the receiver by wrapping it in foam rubber or other vibration-absorbing material and mount it with thick double-sided tape.
❗ When using the receiver holder supplied with the model kit, mount the holder to the chassis through a rubber grommet.

(Boat)
❗ Vibration-proof the receiver by wrapping it in foam rubber or other vibration-absorbing material. Also waterproof the receiver by cruising it in a plastic bag.

If the receiver is exposed to strong vibration and shock, it will operate erroneously due to the invasion of water drops and you may lose control of the model.

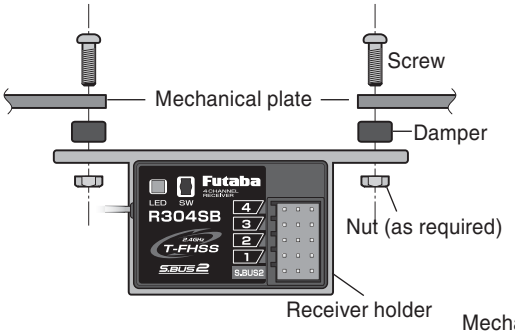

When using the receiver holder supplied with the kit, install the receiver through a rubber grommet.

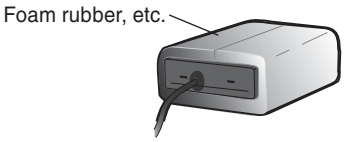

Wrap the receiver in foam rubber or other vibration-absorbing material. Do not use hard material. Hard material does not have a vibration-proofing effect.

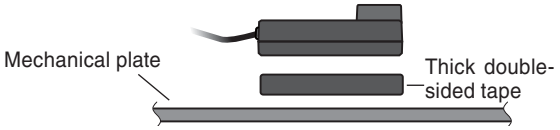

When mounting the receiver with double-sided tape, do not use a stiff tape. Stiff tape does not have a vibration-proofing effect.

4PX-Eng-05-Instllation-P32-35.indd 33 2014/07/18 15:52:45

⚠Warning

Connector Connections

❗ Be sure the receiver, servo, battery and connectors are fully and firmly connected.

If vibration from the model causes a connector to work loose while the model is in operation, you may lose control .

Servo Installation

❗ When you install the servos, always use the rubber grommets provided in servo hardware bags. Mount the servos so they do not directly come in contact with the mount.

If the servo case comes in direct contact with the mount, vibration will be directly transmitted to the servo.
If this condition continues for a long time, the servo may be damaged and control will be lost.

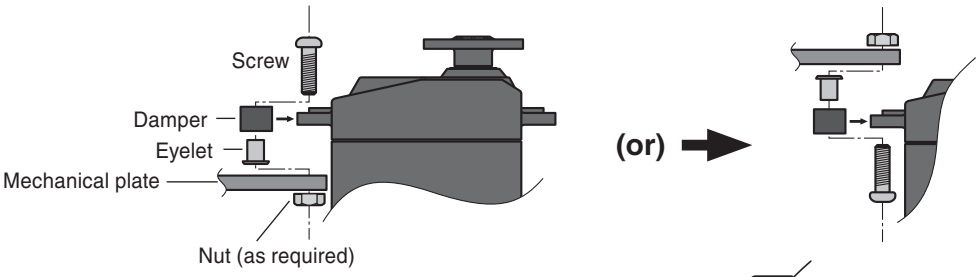

When installing the servo, always install the accessory rubber grommet and grommet flush against the servo.

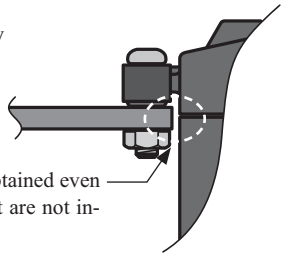

A vibration-damping effect is not obtained even if the rubber grommet and grommet are not installed correctly.

Servo Throw

❗ Operate each servo over its full stroke and be sure the linkage does not bind or is loose.

The continuous application of unreasonable force to a servo may cause damage and excessive battery drain.

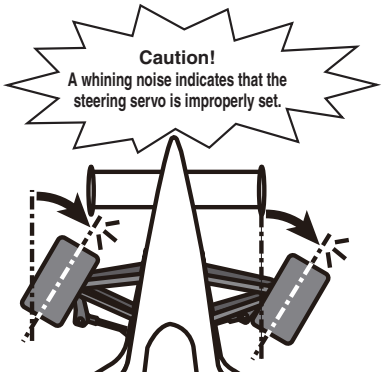

Decide the EPA value at the contact point.

Adjust the steering servo so that unreasonable force is not applied to the servo by the chassis at maximum servo travel.

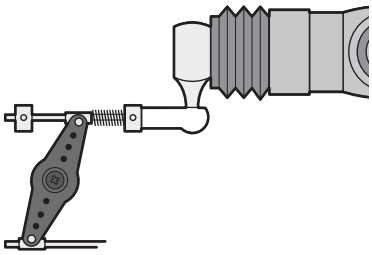

Adjust the throttle servo so that unreasonable force is not applied when the engine carburetor is fully open, fully closed, and the brakes are applied fully.
If the brakes overheat while running, their ability to function properly decreases. Before running, adjust the suitable maximum servo travel so that unreasonable force is not applied even when the servo travel is increased while running.

4PX-Eng-05-Instllation-P32-35.indd 34 2014/07/18 15:52:46

⚠Warning

Electronic Speed Cont

❗Install the heat sinks where they will not come in contact with aluminum, carbon fiber or other parts that conduct electricity.

If the FET Amp (Electronic speed control) heat sinks touch other materials that conduct electricity a short circuit could occur. This could result in loss of control and damage to the system.

Motor Noise Suppression

❗Always install capacitors to suppress noise when electric motors are used.

If capacitors are not properly installed you could experience erratic operation and reduced range as well as loss of control.

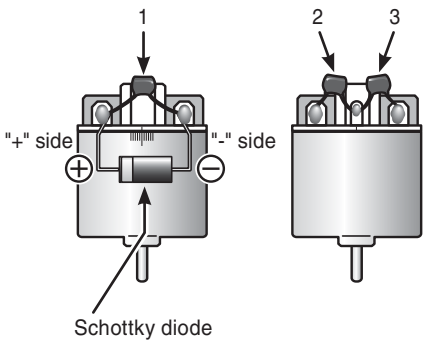

Motors with no suppressor capacitors, or inadequate suppression, may cause the receiver to malfunction. Always solder the capacitors supplied to your motor.
The Schottky diode improves the efficiency of the speed control / motor combination and provides extra protection to the brake FETs. The white ring must always face the positive side.

Other Noise Suppression Methods

❗Be sure there are no metal parts in your model which under vibration can come in contact with other metal parts.

Metal to metal contacts under vibration will emit a high frequency noise that will affect the receiver's performance. You could experience erratic operation and reduced range as well as loss of control.

4PX-Eng-05-Instllation-P32-35.indd 35 2014/07/18 15:52:46

Preparations (Transmitter)

(Display when power switch turned on)

When the power switch is turned on, the currently selected model number is displayed. Check if this number is the model number you want to set-up. To change the model number, use the Model Select function. (p.112)

Turn on the transmitter power.

The model number is displayed.

(HOME screen)

Before setting up each function of the transmitter, check and set the following items.

RF Output & Rx Type Check

Check if the receiver type is set to the type of receiver used.

*When the "PWR" side power switch is set to ON and radio waves are output normally, "T-FHSS", "S-FHSS", or "FASST" is displayed. If not displayed, there is probably an abnormality or trouble so contact a Futaba Service Center.

When a screen is displayed at the "DSP" side, "Display" is displayed.

*Since the R304SB receiver supplied with the T4PX set uses the telemetry function T-FHSS system, T4PX receiver setup must be set to T-FHSS.

"T-FHSS" is displayed

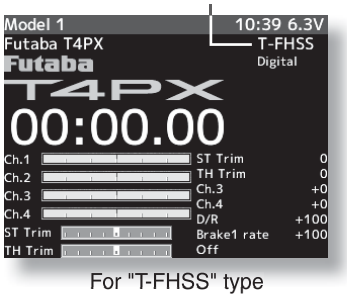

For "T-FHSS" type

The R2104GF and other S-FHSS and FASST system receivers, as well as the R304SB T-FHSS system receiver can be used with the T4PX transmitter. However, only R614FS/FS/FF-E and R604FS/FS-E "C2" type receivers can be used with the FASST system.

The R603FS/FF "C1" type cannot be used.

4PX-Eng-06-Inst_set-36-41.indd 36 2014/07/18 16:58:44

Receiver Type Change & How To Link

First set up the receiver. Setting changes are immediately reflected. Next, the transmitter and receiver are linked and the receiver memorizes the transmitter ID number so that signals from other transmitters will not be received.

In addition, with the T-FHSS telemetry system, the transmitter simultaneously memorizes the receiver ID numbers so that data from other receivers will not be received.

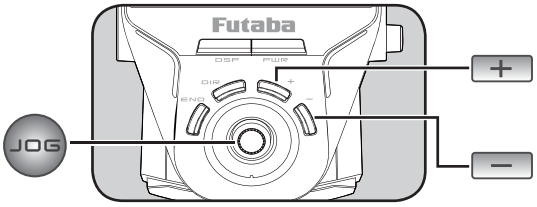

The method of setting up the receiver type and the method of linking the transmitter and receiver are described. Refer to the figure at the right for the edit buttons used.

1 Set the transmitter "PWR" side power switch to ON.

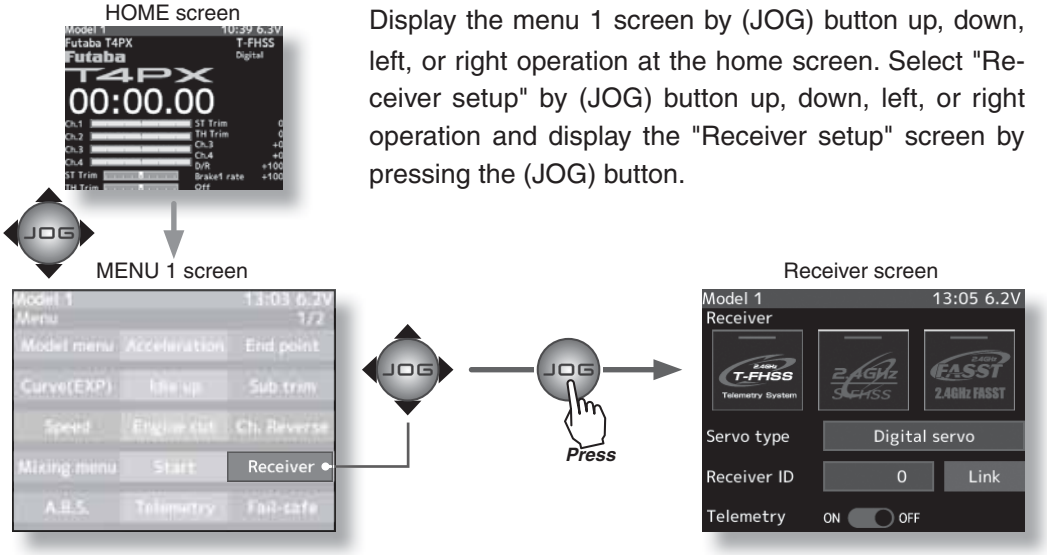

Display the menu 1 screen by (JOG) button up, down, left, or right operation at the home screen. Select "Receiver setup" by (JOG) button up, down, left, or right operation and display the "Receiver setup" screen by pressing the (JOG) button.

2 Select the receiver type to be changed by (JOG) button left or right operation. When the (JOG) button is pressed, a confirmation screen is displayed. To execute the change, select "YES" by JOG button. When the JOG button is pressed for about 1 second, an electronic beeping sound is generated and setting is ended. To cancel the change, select "No" and press the (JOG) button.

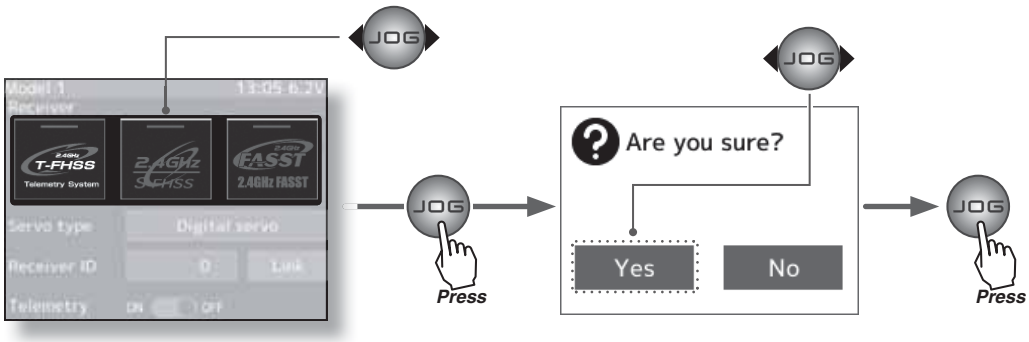

* After set up this far is complete, when using a FASST system (R614FS/FF/FF-E) or S-FHSS system (R2104GF, R204GF-E, etc.) receiver, go to "Receiver other than T-FHSS" on P39. When using a telemetry function T-FHSS receiver (R304SB, etc.), go to step

4PX-Eng-06-Inst_set-36-41.indd 37 2014/07/18 16:58:46

3 Bring the transmitter and receiver within 50cm of each other (antennas do not touch) and turn on the receiver power.

4 Move the cursor to "Link" by T4PX transmitter (JOG) button up or down operation. When the (JOG) button is pressed, a chime will sound and the T4PX will enter the link mode for 20 seconds. During this 20 seconds link mode, press the receiver tactile switch for at least 2 seconds.

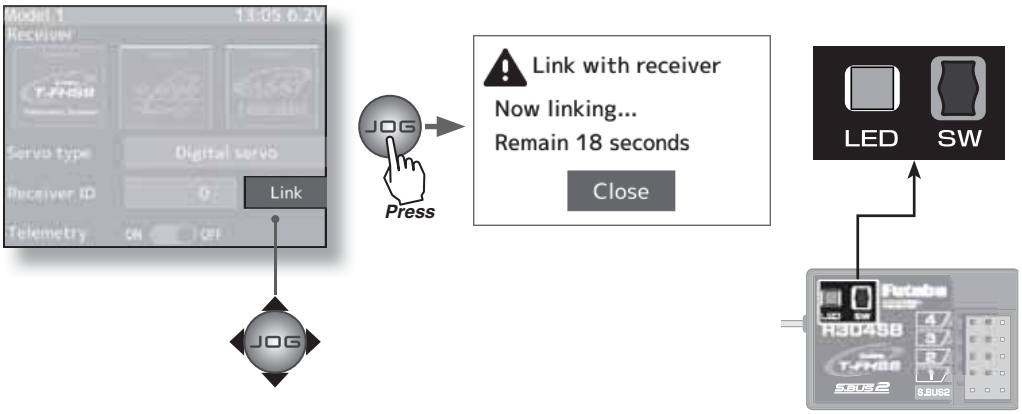

5 During the 20 seconds link mode, press the receiver tactile switch for at least 2 seconds. The LED blinks red and then changes to a greenish red → green steady light. When the T4PX makes a beeping sound and the message "Link with receiver" appears on the screen, release the receiver tactile switch. This ends reading of mutual ID and displays the memorized receiver ID number on the T4PX screen. If the "Receiver not found" error screen is displayed, linking failed. Check the set contents and repeat the linking operation.

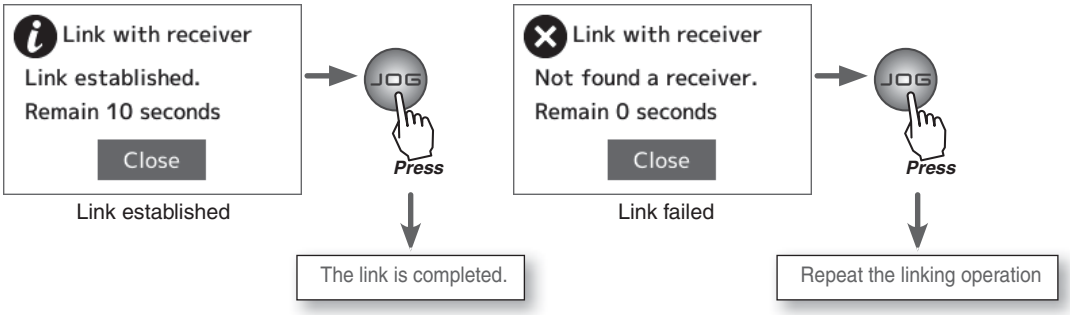

* The T4PX and a telemetry system T-FHSS receiver (R304SB, etc.) memorize the IDs linked last at each model memory. Since only one receiver ID is memorized at each model memory, multiple T-FHSS receivers cannot be used with the same model memory. When a receiver at the same model memory is changed, re-linking is necessary even if the receiver is already linked with the transmitter.

When using multiple T-FHSS telemetry receivers, link each receiver with each T4PX model memory. However, one receiver can be linked with multiple model memories. The telemetry function communication status can be checked at the T4PX home screen.

4PX-Eng-06-Inst_set-36-41.indd 38 2014/07/18 16:58:46

Receivers Other Than T-FHSS

1 Bring the transmitter and the receiver close to each other, within 20 inches (half meter).

2 Turn on the transmitter.

3 Turn on the receiver.

4 Push the tactile switch of the receiver.
When the link is complete, the LED in the receiver changes to solid green.

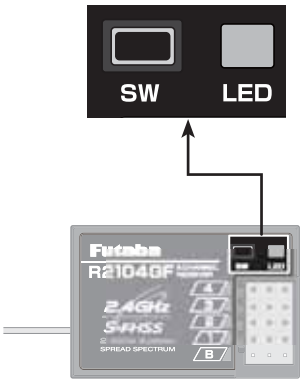

Precaution:

If there are many Futaba 2.4GHz systems (T-FHSS/ S-FHSS/ FHSS) turned on in close proximity to your receiver might not link to your transmitter. In this case, even if the receiver's LED stays solid green, unfortunately the receiver might have established a link to one of other transmitters. This is very dangerous if you do not notice this situation. In order to avoid the problem, we strongly recommend you to double-check whether your receiver is really under control by your transmitter by giving the stick input and then checking the servo response.

*Please refer to the table below for LED status vs receiver's condition.

LED status vs receiver's condition:

No signal reception	Red : On
Receiving signals	Green: On
Receiving signals, but ID is unmatched.	Green: Blink *1 (T-FHSS ,Red : On)
Unrecoverable failure (EEPROM,etc.)	LED: Red and Green turn on alternately

*1: LED could be change to red during intermittently during data processing.

⚠Warning

- After the linking is done, please cycle receiver power and check if the receiver to be linked is really under the control of your transmitter.
- Do not perform the linking procedure with motor's main wire connected or the engine operating as it may result in serious injury.

Servo Type Check

Check if the servo type setting matches the servo used. When a digital servo (including BLS brushless servo) is used, "Digital servo" or "Analog servo"" can be set. Since an analog servo cannot be used with the "Digital servo" setting, the servo type must be set to "Analog servo". If used with the wrong setting, the analog servo will be damaged. If the setting is incorrect, change it by the following method.

"Digital" is displayed

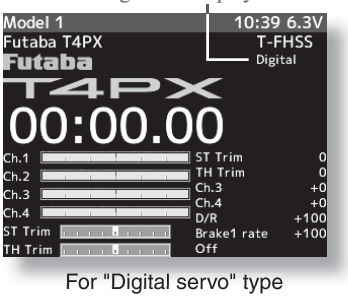

For "Digital servo" type

4PX-Eng-06-Inst_set-36-41.indd 39 2014/07/18 16:58:48

Refer to page 36 and display the "Receiver setup" screen. Move the cursor to the servo type by (JOG) button up or down operation. Changes when "Digital servo" or "Analog servo" is selected by pressing the (+) or (-) button.

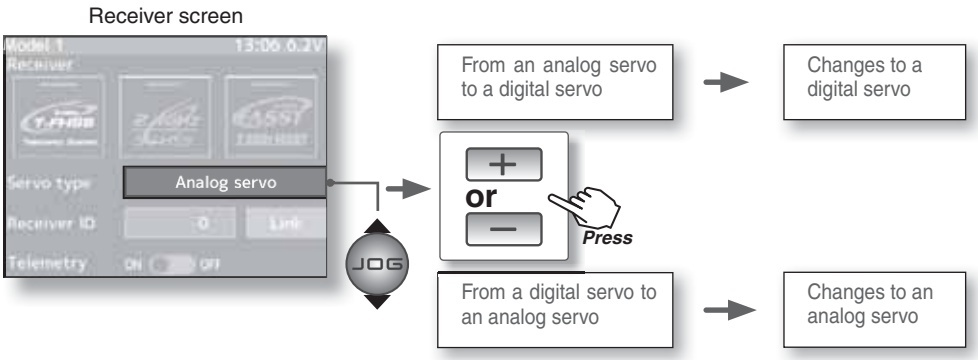

Trigger Ratio Check

-The throttle servo travel can be set to 50:50, 70:30 or 100:0 for throttle trigger operation as required by the Trigger mode function (p.66).

-The throttle brake operation might be a close by setting it to "100:0" when the T4PX transmitter with the boat is used.

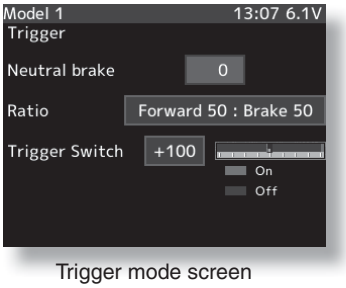

Trigger mode screen

Trims Initial Set-Up

- Steering trim (DT1) check

On the initial set-up, steering trim is assigned to the DT1 trim lever above. Operate the lever and make sure the marker moves on the ST graph. If default has been changed, test steering trim in its new location. After checking the trim, set the trim display to the center (N) position.

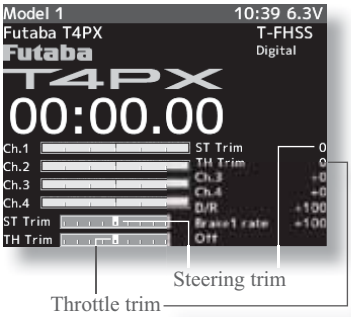

- Throttle trim (DT2) check

On the initial set-up, throttle trim is assigned to the DT2 trim lever. Operate the lever and make sure the marker moves on the TH graph. If the default has been changed, test the throttle trim in its new location. After checking the trim, set the trim display to the center (N) position.

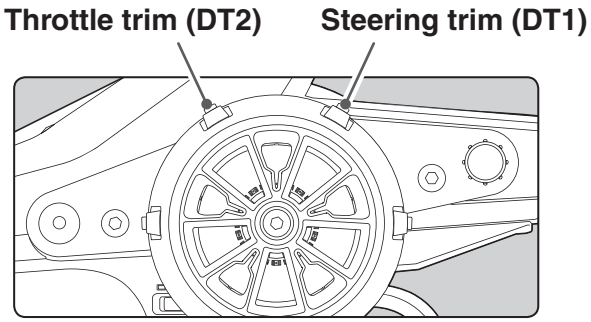

4PX-Eng-06-Inst_set-36-41.indd 40 2014/07/18 16:58:48

- Steering dual rate (DT5) check

At initial set-up, steering dual rate (D/R) is assigned to DT5 trim lever, at the grip of the transmitter. Operate the DT5 and check if the D/R value displayed on the screen changes. After checking D/R, set the steering dual rate to 100%.

- Brake rate (DT6) check

At initial setting, brake rate (Brake1 rate) is assigned to DT6 trim lever, below DT6. Operate the DT6 and check if the Brake1 rate value displayed on the screen changes. After checking Brake1 rate, set brake rate to 100%.

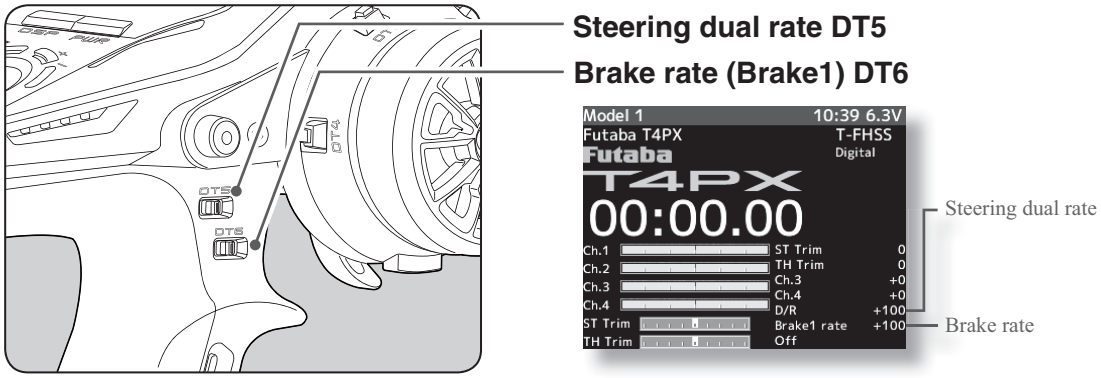

(Set-Up Procedure When Installed In a Car)

When installing the servos in a car, performing function set-up in the following order is recommended.

1 Initialize all the trims.

2 Set the servo direction of operation using the Reverse function. (p.47)

- The servo installation method and linkage direction depend on the kit. Therefore, the servo operation direction may have to be reversed relative to transmitter operation. Before installing the servo, check the operating direction and set it using the Reverse function.

3 Set the subtrim and adjust the servo neutral point. (p.48)

4 Set the trigger travel by adjusting the throttle trigger mechanical ATL to your liking. (p.18)

- When the stroke was adjusted, compensate the throttle by adjuster function (p.152).

5 Set EPA of each channel and adjust the servo throw (travel). (p.49)

4PX-Eng-06-Inst_set-36-41.indd 41 2014/07/18 16:58:49

Menu Selection

In this instruction manual, Edit Buttons are represented by the symbols shown below.
The (JOG) button can be operated in the 4 directions up, down, left, and right.

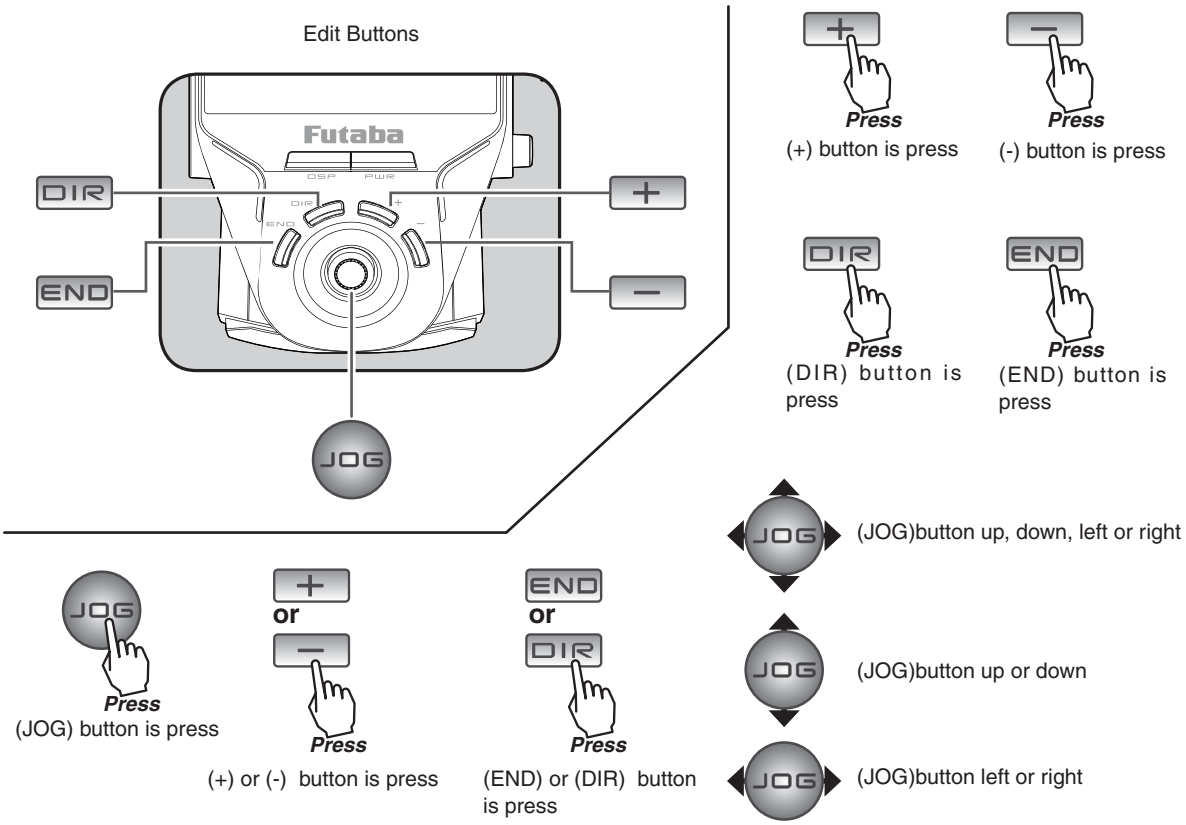

Calling The Menu Screen

The menu screen consists of 2 pages designated menu 1 and menu 2, and can display up to 29 setting items. Refer to the map on the next page for a description of the menu screen and setup screen display method.

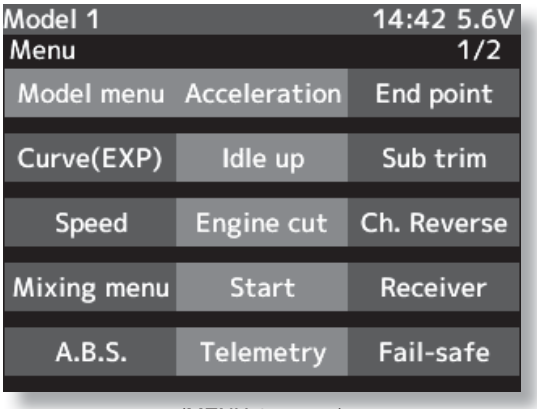

(MENU 1 screen)

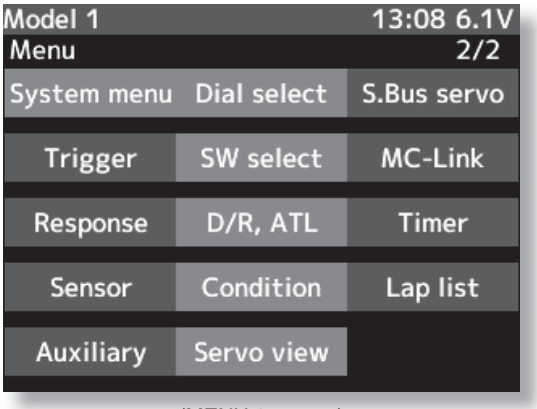

(MENU 2 screen)

4PX-Eng-07-Menu-42-45.indd 42 2014/07/18 17:08:27

Selecting Items On The Menu Screen

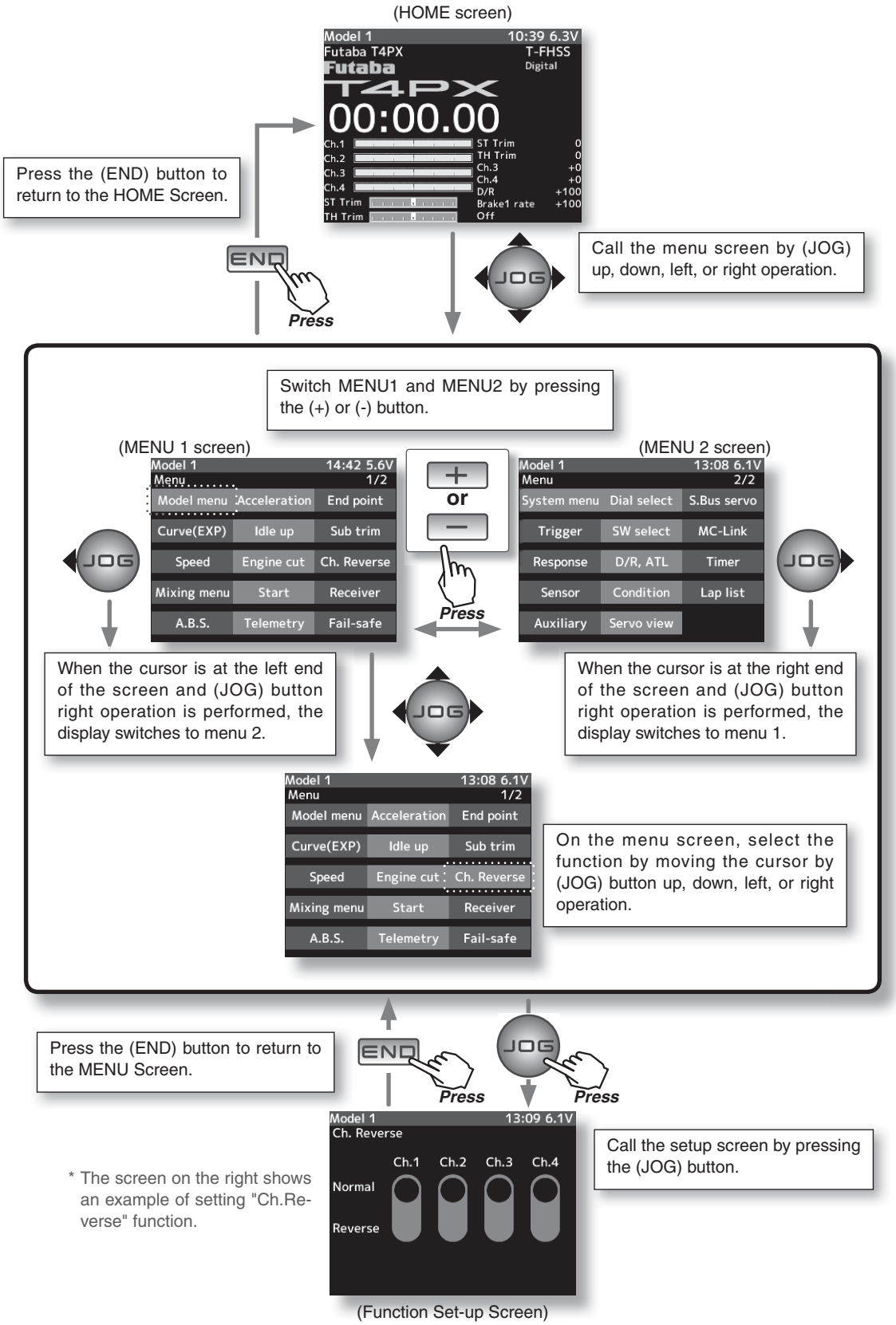

4PX-Eng-07-Menu-42-45.indd 43 2014/07/18 17:08:27

Direct Menu

With the T4PX, setting items often used can be registered as up to 10 direct menus. A different direct menu can be created for each model memory. The direct menus can also be copied to other models by model copy function. (p.114)

Displaying the direct menu screens

The direct menu screens can be displayed by pressing the (DIR) button from any screen.

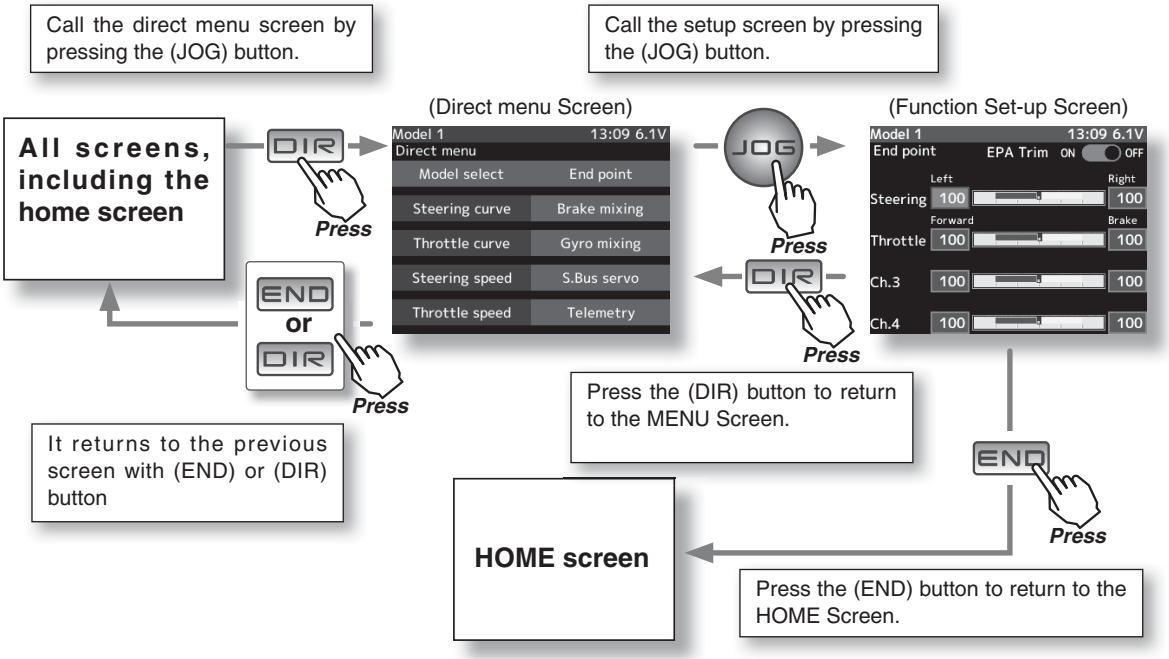

Menu assignment

1 Call the direct menu screen by pressing the (DIR) button.

2 Move the cursor and select the location to be assigned a function by (JOG) button up, down, left, or right operation.

3 Select the function to be assigned by (+) or (-) button.

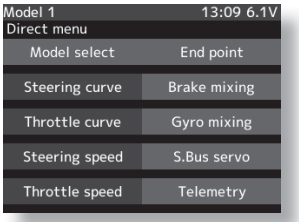

(Direct menu Screen)

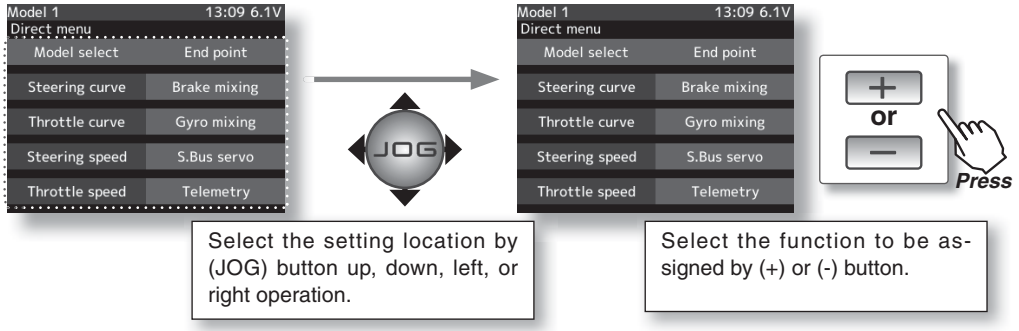

4 When assignment is complete, return to the direct menu screen by pressing the (DIR) button.

4PX-Eng-07-Menu-42-45.indd 44 2014/07/18 17:08:28

Function List

Function Name	Description Of Function
Model select	Model memory call
Model copoy	Model memory copy
LED setting	LED on/off, jog LED on/off
S.BUS servo	S.BUS servo Link software setting
Sensor	Telemetry sensors setting
Sensor list	Telemetry sensors list
Telemetry	Telemetry data screen
MC-Link	MC851C/602C/402CR/950CR/940CR /960CR Link software setting function
Condition	2ND condition
User name	User name set/modify
Battery	Battery type setting
Date and time	Date and time setting
Calibration	Steering wheel and throttle trigger correction
Display	LCD contrast/backlight setting
End point	End point adjustment
Fail safe	Fail safe, battery fail safe
Information	Language setting / version information
Model name	Model memory name set/modify
Data reset	Model memory reset (Model, Direct menu, All)
Ch. Reverse	Servo operation reversing
Sound	Sound setting (telemetry sound, alarm sound, operating sound)
Sub Trim	Servo center position fine adjustment
Receiver	Receiver type/servo tyoe selection/ linking with telemetry type T-FHSS system receiver
Response	etting of the response
Auxiliary	Channel 3&4 servos operation position set/check

Function	Description Of Function
Servo view	Displays servo operation on a bar graph
D/R,ATL	Steering angle adjustment while running/ Brake side adjustment
Dial select	Selection of functions operated by digital dial and digital trim
SW select	Selection of functions operated by push switches
Acceleration	Reduces the "lag time" of the throttle from the neutral position.
Steering curve	Steering curve adjustment
Throttle curve	Throttle curve adjustment
Steering speed	Steering servo delay
Throttle speed	Throttle servo delay
Start	Throttle preset at start function
Engine cut	engine cut off by switch
A.B.S	Pumping brake
Brake mixing	Front and rear independent brake control for 1/5GP car, etc.
Tilt mixing	Outboard engine tilt mixing
Trigger	Neutral brake and throttle servo forward side and brake side operation rate setting/Trigger SW
Idle up	Idle up at engine start
Program. mixing 1-5	Programmable mixing between arbitrary channels
4WS mixing	4WS mixing
Dual ESC	Front and rear ESCs mixing
Gyro mixing	The sensitivity of Futaba car rate gyros can be adjusted
CPS mixing	The CPS-1 of Futaba LED controller can be adjusted.
Steering mixing	Twin servo mixing of the steering
Timer	Up, down, lap, or lap navigation timer
Lap list	Lap timer data (lap time, average lap, best lap time) check
-------	

4PX-Eng-07-Menu-42-45.indd 45 2014/07/18 17:08:28

Receiver Setting / Servo Type

This menu selects the settings matched to the receiver system used and the type of servo and the items selected at the T4PX, linking of the T4PX with the T-FHSS telemetry system, and ON/OFF.

Receiver

The T4PX transmitter can use the S-FHSS and FASST system receivers, as well as the R304SB T-FHSS system receiver supplied. However, only the "C2" type (R614FS/FF/FF-E,etc) receivers can be used with the FASST system. The R603FS/FF "C1" type receiver does not operate. Make your selection by matching to the system of the receiver to be used.

The model data remains unchanged even if the receiver setting is changed.

Servos

"Digital servo type" or "Analog servo type" servo type can be selected. However, the "Digital servo type" is for Futaba digital servos (including BLS Series brushless servos) use only. When using other servos, select the "Analog servo type". All servos, including digital servos, can be used in the "Analog servo type".

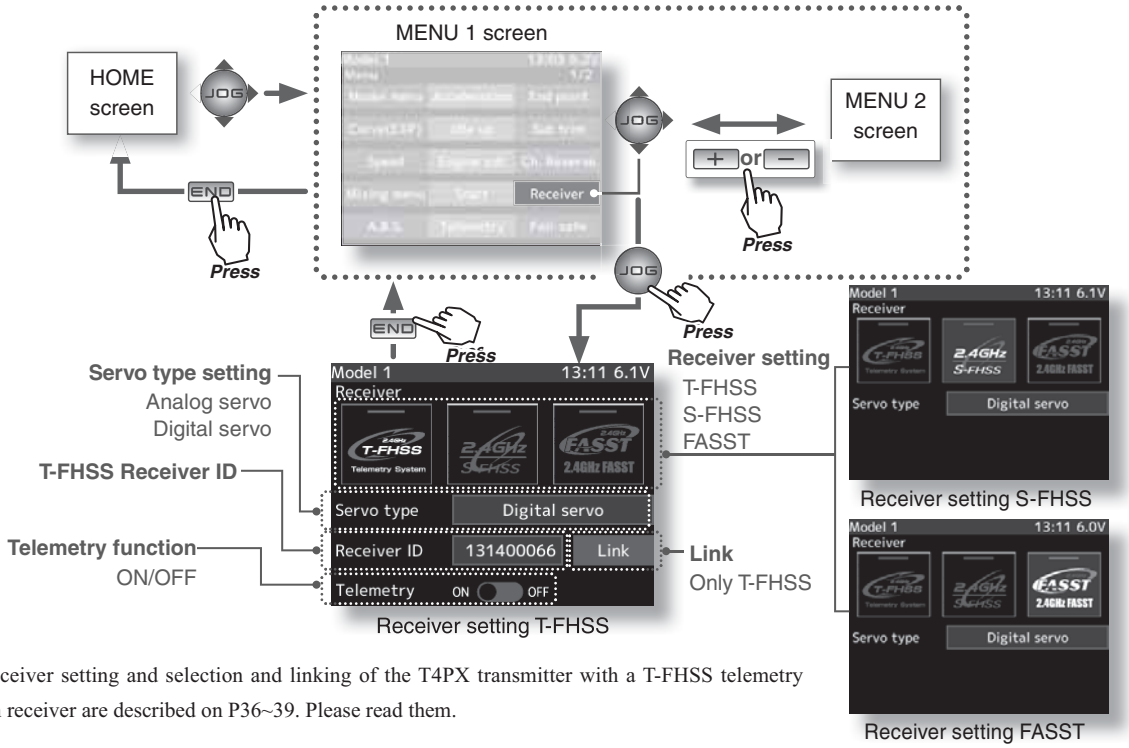

The receiver setting and selection and linking of the T4PX transmitter with a T-FHSS telemetry system receiver are described on P36~39. Please read them.

Telemetry function ON/OFF

Select telemetry by (JOG) button operation.

1 (Function ON/OFF)
Select the type and ON/OFF by (+) or (-) button.

2 When ending, return to the menu screen by pressing the (END) button.

Telemetry function ON

4PX-Eng-08-Function-46-65.indd 46 2014/07/18 17:14:47

Ch. Reverse (All channel)

This function reverses the direction of operation of the servos related to transmitter steering, throttle, channel 3, and channel 4 operation.

However, when the position set by trim or subtrim shifts from the center, the center becomes the opposite side.

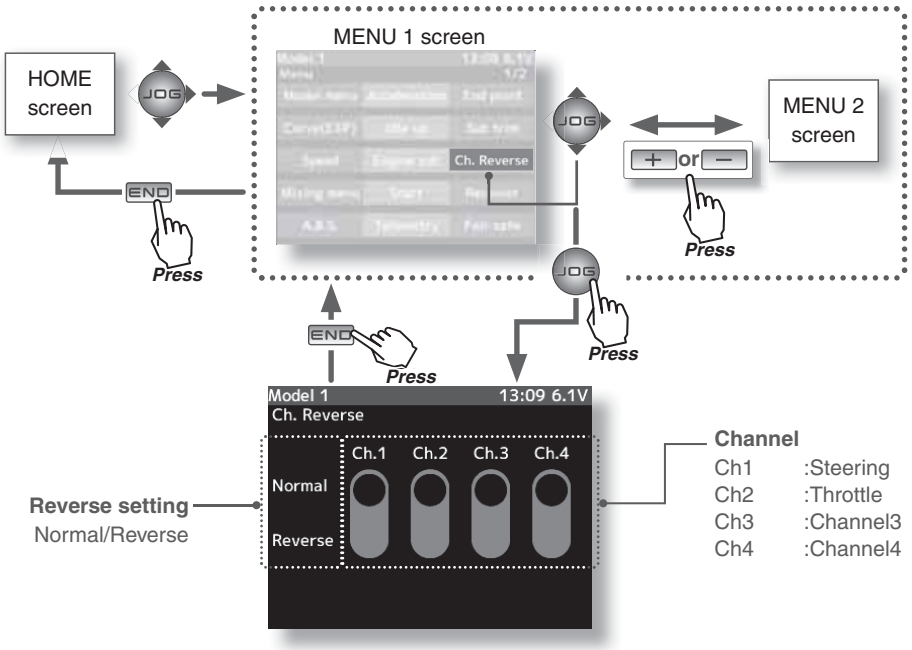

Servo Reverse Function Setting

(Preparation)

Select the channel to be set by (JOG) button left or right operation.

1 (Servo reverse setting)

Use the (+) or (-) button to reverse the servo operation direction.

(Each channel can be set similarly.)

Channel selection
- Select by (JOG) button left or right operation.

Select button
- Select with the (+) or (-) buttons.

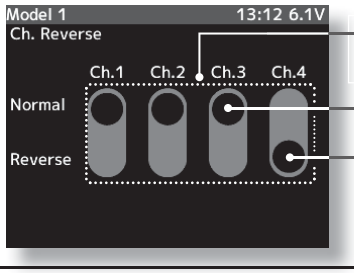

2 When ending setting, return to the menu screen by pressing the (END) button.

4PX-Eng-08-Function-46-65.indd 47 2014/07/18 17:14:48

Sub trim (All channel)

Use this function to adjust the neutral position of the steering, throttle, channel 3 and channel 4 servos.

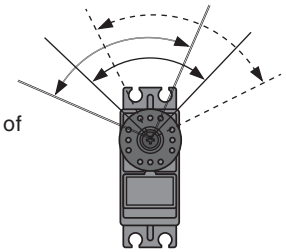

*Subtrim adjusts the entire range of the servo in the set direction.

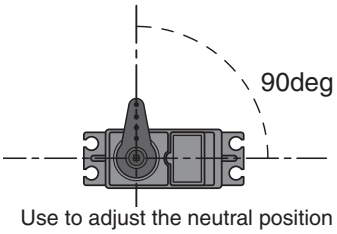

Use to adjust the neutral position

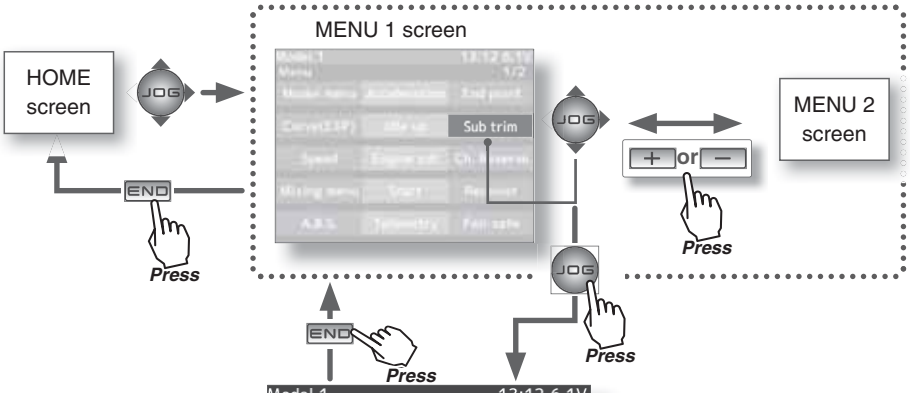

Set the steering and throttle digital trims to the neutral "0" position.

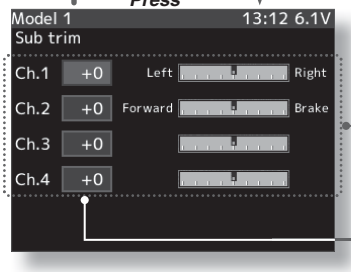

Channel

Ch1 :Steering
Ch2 :Throttle
Ch3 :Channel3
Ch4 :Channel4

The rate of the current channel is displayed in blue.

Sub trim adjustment

(Preparation)

- Set the steering and throttle digital trims to the neutral "0" position. Set CH3 and CH4 to the center "0" position.
- Select the channel to be set by (JOG) button up or down operation.

1 (Subtrim adjustment)

Use the (+) or (-) button to adjust the center.

(Each channel can be set similarly.)

Channel selection

- Select by (JOG) button up or down operation.

Adjustment buttons

- Adjust with the (+) and (-) buttons.
- Return to the initial value "0" by pressing the (+) and (-) buttons simultaneously for about 1 second.

Subtrim

CH1 :-100~+100
CH2 :-100~+100
CH3 :-100~+100
CH4 :-100~+100
Initial value : 0

2 When ending setting, return to the menu screen by pressing the (END) button.

Subtrim

Function

4PX-Eng-08-Function-46-65.indd 48 2014/07/18 17:14:48

End Point Adjuster (All channel)

Use this when performing left and right end point adjustments, throttle high side/brake side operation amount adjustment, channel 3 and channel 4 servo up side/down side operation amount adjustment during linkage.

- Correct the maximum steering angle for left and right steering angles when there is a difference in the turning radius due to the characteristics, etc. of the vehicle.

Maximum steering angle

The End point function basically determines the maximum steering angle of each channel.

The functions shown below may have been adjusted or the operating range set by End point function may be exceeded. Check the linkage each time the following functions are adjusted.

- Sub trim (all channels)
- Program mixing slave side (all channels)
- Tilt mixing (steering, channel 3)
- Idle up (throttle)
- Start Function, Engine Cut (throttle)
- Throttle acceration (throttle)

Brake rate trim

Brake rate trim allows adjustment of the brake side operation amount during operation. Therefore, when the operating angle is adjusted with throttle End point, Brake rate trim must also be taken into account.

Remark

When the steering angle is insufficient even though End point is increased to maximum (140%), the steering angle can be increased somewhat by using program mixing.
(Setup example: See page 96.)

⚠Warning

❶Operate each servo over its full stroke and be sure the linkage does not bind or is not loose.

The continuous application of unreasonable force to a servo may cause damage and excessive battery drain.

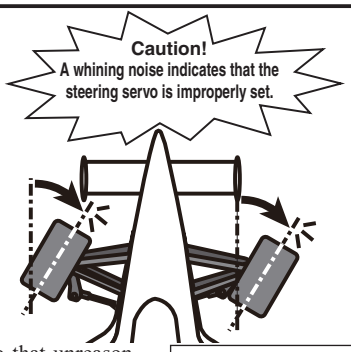

Adjust the steering servo so that unreasonable force is not applied to the servo by the chassis at maximum servo travel.

Decide the End point value at the contact point.

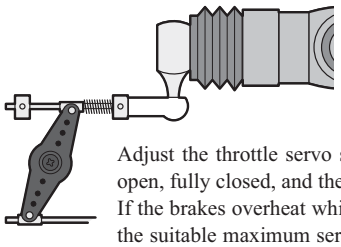

Adjust the throttle servo so that unreasonable force is not applied when the engine carburetor is fully open, fully closed, and the brakes are applied fully.
If the brakes overheat while running, their ability to function properly decreases. Before running, adjust the suitable maximum servo travel so that unreasonable force is not applied even when the servo travel is increased while running.

End Point

4PX-Eng-08-Function-46-65.indd 49 2014/07/18 17:14:49

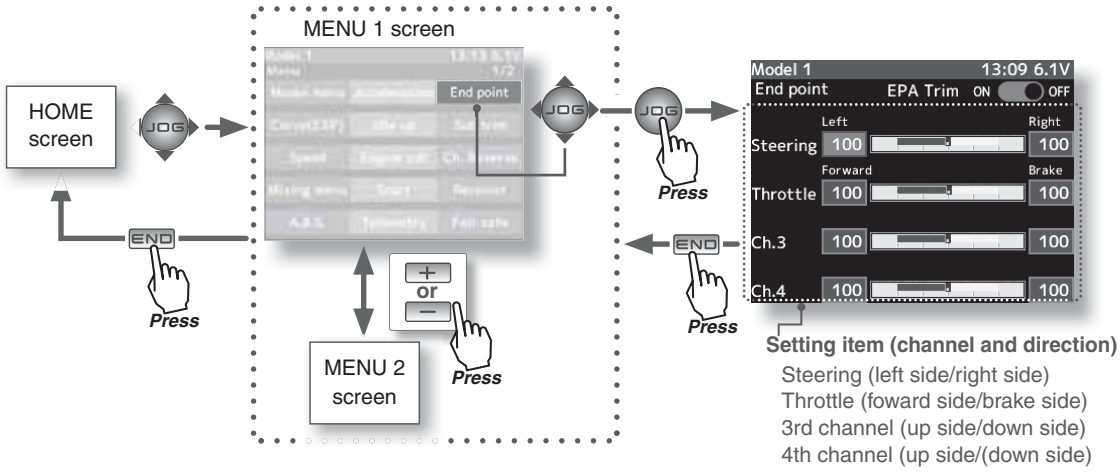

Setting item (channel and direction)

Steering (left side/right side)
Throttle (foward side/brake side)
3rd channel (up side/down side)
4th channel (up side/(down side)

Steering end point adjustment

(Preparation)

- Before setup of the steering end point adjustment, set the steering D/R dial (initial setup: DT5) to the maximum steering angle position 100%.
- Select the setting item "Steering Left" by (JOG) button operation and make the following adjustments:

1 Steering (left side) adjustment
Turn the steering wheel fully to the left and use the (+) or (-) buttons to adjust the steering angle.

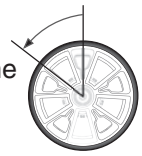

2 Steering (right side) adjustment
Turn the steering wheel fully to the right and use the (+) or (-) buttons to adjust the steering angle.

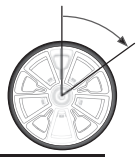

3 When ending setting, return to the menu screen by pressing the (END) button.

Adjustment buttons

Adjust with the (+) and (-) buttons.

- Return to the initial value "100" by pressing the (+) and (-) buttons simultaneously for about 1 second.

Note

Step #1 & #2 are done when the receiver is in the on position installed on the chassis. You're watching the wheels reach their maximum end point.

Steering End point :0~140
Initial value :100

Quick EPA

When EPA trim is turned on, the steering angle (end point) can be adjusted by steering trim set digital trim or dial. (Steering trim initial setting: DT1)

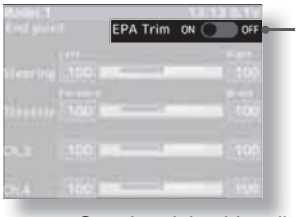

EPA Trim ON/OFF

Steering left side adjustment
With the steering wheel turned fully to the left, steering is adjusted by steering trim. Temporarily displayed at this part of the HOME screen as shown in the figure below.

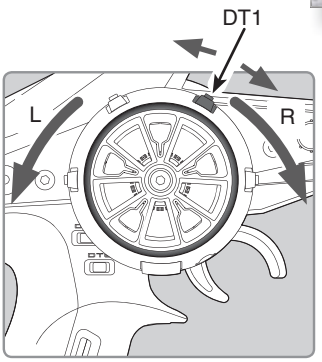

Steering right side adjustment
With the steering wheel turned fully to the right, steering is adjusted by steering trim. Temporarily displayed at this part of the HOME screen as shown in the figure below.

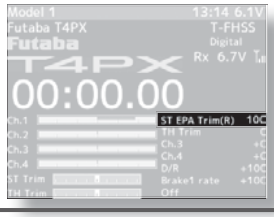

End Point

4PX-Eng-08-Function-46-65.indd 50 2014/07/18 17:14:50

Throttle end point adjustment

(Preparation)

- Before setting the throttle end point adjustment, set the throttle ATL dial (initial setup: DT6) to the maximum throttle angle position 100%.
- Select the setting item "Throttle Forward" by (JOG) button operation and make the following adjustments:

1 Throttle (forward side) adjustment

Pull the throttle trigger fully to the high side and use the (+) or (-) buttons to adjust the throttle angle. However, when using an FET amp, set to 100%.

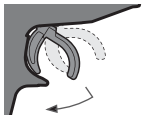

2 Throttle (brake side/reverse side) adjustment

Move the throttle trigger fully to the brake side and use the (+) or (-) buttons to adjust the throttle angle. However, when using an ESC, set to 100%.

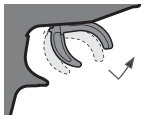

3 When adjusting the throttle angle of another channel immediately after this, see the adjustment method for that channel. When ending setting, return to the menu screen by pressing the (END) button.

Adjustment buttons

- Use the (+) and (-) buttons to make adjustments.
- Return to the initial value "100" by pressing the (+) and (-) buttons simultaneously for about 1 second.
- Please see previous note on page 50.

Throttle End point :0~140
Initial value :100

> When Trigger Ratio (p.66) was set to 100:0, brake operation is stopped and the throttle (brake side) cannot be adjusted.

3rd & 4th channel servo end point adjustment

(Preparation)

- Select the channel whose steering angle is to be adjusted and the direction by (JOG) button operation.

1 Use the (+) or (-) buttons to adjust the servo angle.

Adjustment buttons

- Use the (+) and (-) buttons to make adjustments.
- Return to the initial value "100" by pressing the (+) and (-) buttons simultaneously for about 1 second.
- Please see previous note on page 50.

3rd & 4th channel End point :0~140
Initial value :100

Spare channel display

When a mixing function is set at a spare channel, the display changes.

This is an example of setting dual ESC mixing at the 3rd channel and 4WS mixing at the 4th channel.

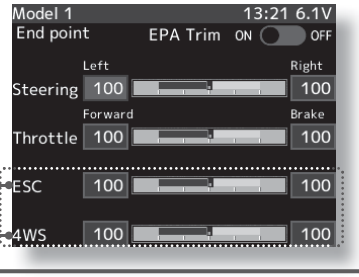

2 When ending setting, return to the menu screen by pressing the (END) button.