Thank you for purchasing a Futaba 7PX-2.4GHz system.
Before use, read this manual carefully in order to use it safely.
After reading this manual, store it in a safe place.

IN NORTH AMERICA

Please feel free to contact the Futaba Service Center for assistance with operation and programming. Please be sure to regularly visit the 7PX Frequently Asked Questions web site at www.futaba-rc.com/faq/. This page includes extensive programming, use, set up and safety information on the 7PX radio system and is updated regularly. Any technical updates and US manual corrections will be available on this web page. If you do not find the answers to your questions there, please see the end of our F.A.Q. area for information on contacting us via e-mail for the most rapid and convenient response.

Don't you have Internet access? Internet access is available at no charge at most public libraries, schools, and other public resources. We find internet support to be a fabulous reference for many modelers as items can be printed and saved for future reference, and can be accessed at any hour of the day, night, weekend or holiday. If you do not wish to access the internet for information, however, don't worry. Our support teams are available Monday through Friday 8-5 Central time to assist you.

FOR SERVICE ONLY:

Futaba Service Center
3002 N. Apollo Drive, Suite 1
Champaign, IL 61822
Phone: 217-398-0007
www.futaba-rc.com/service.html
E-mail: futabaservice@hobbico.com

FOR SUPPORT :

(PROGRAMMING AND USER QUESTIONS)
Please start here for answers to most questions:
www.futaba-rc.com/faq/
Fax: 217-398-7721
Phone: 217-398-8970 option 2

OUTSIDE NORTH AMERICA

Please contact the Futaba importer in your region of the world to assist you with any questions, problems or service needs. Please recognize that all information in this manual, and all support availability, is based upon the systems sold in North America only. Products purchased elsewhere may vary. Always contact your region's support center for assistance.

Application, Export, and Modification

1. This product may be used for models only. It is not intended for use in any application other than the control of models for hobby and recreational purposes.

2. Exportation precautions:

(a) When this product is exported from the country of manufacture, its use is to be approved by the laws governing the country of destination for devices that emit radio frequencies. If this product is then re-exported to other countries, it may be subject to restrictions on such export. Prior approval of the appropriate government authorities may be required. If you have purchased this product from an exporter outside your country, and not the authorized Futaba distributor in your country, please contact the seller immediately to determine if such export regulations have been met.

(b) Use of this product with other than models may be restricted by Export and Trade Control Regulations, and an application for export approval must be submitted.

3. Modification, adjustment, and replacement of parts: Futaba is not responsible for unauthorized modification, adjustment, and replacement of parts on this product. Any such changes may void the warranty.

Compliance Information Statement (for U.S.A.)

This device complies with part 15 of the FCC Rules. Operation is subject to the following two conditions:

(1) This device may not cause harmful interference, and (2) This device must accept any interference received, including interference that may cause undesired operation.

RF Radiation Exposure Statement

This equipment complies with FCC radiation exposure limits set forth for an uncontrolled environment.

This transmitter must not be co-located or operating in conjunction with any other antenna or transmitter.

The responsible party for the compliance of this device is:

Futaba Service Center

3002 N Apollo Drive Suite 1, Champaign, IL 61822 U.S.A.

TEL (217)398-8970 or E-mail: support@hobbico.com (Support)

TEL (217)398-0007 or E-mail: futabaservice@hobbico.com (Service)

IC

This device complies with Industry Canada license-exempt RSS standard(s). Operation is subject to the following two conditions:

(1) this device may not cause interference, and (2) this device must accept any interference, including interference that may cause undesired operation of the device.

This equipment complies with IC radiation exposure limits set forth for an uncontrolled environment. This transmitter must not be colocated or operating in conjunction with any other antenna or transmitter.

French:

Cet appareil radio est conforme au CNR d'Industrie Canada. L'utilisation de ce dispositif est autorisée seulement aux deux conditions suivantes : (1) il ne doit pas produire de brouillage, et (2) l'utilisateur du dispositif doit être prêt à accepter tout brouillage radioélectrique reçu, même si ce brouillage est susceptible de compromettre le fonctionnement du dispositif.

Cet équipement est conforme aux limites d'exposition au rayonnement du CI établies pour un environnement non contrôlé. Cet émetteur ne doit pas être co-situé ou fonctionner conjointement avec une autre antenne ou émetteur.

Declaration of Conformity (for EU)

Hereby, Futaba Corporation declares that the radio equipment type is in compliance with Directive 2014/53/EU.

The full text of the EU declaration of conformity is available at the following internet address:

http://www.rc.futaba.co.jp/english/dl/declarations.html

CAUTION:

To assure continued FCC compliance:

Any changes or modifications not expressly approved by the grantee of this device could void the user's authority to operate the equipment.

- No part of this manual may be reproduced in any form without prior permission.
- The contents of this manual are subject to change without prior notice.
- This manual has been carefully written. Please write to Futaba if you feel that any corrections or clarifications should be made.
- Futaba is not responsible for the use of this product.

Table Of Contents

For Your Safety As Well As That Of Others.....8

Explanation Of Symbols.....8
Receiver Mode Precautions.....8
Operation Precautions.....9
NiMH/NiCd/LiFe Battery Handling Precautions.....10
Storage And Disposal Precautions.....10
Other Precautions.....11

Before Using 12

Features.....12
Set Contents.....14
Transmitter T7PV.....15
Nomenclature.....15
Battery Replacement Method (4 AA Size Batteries).....16
Low Battery Alarm.....16
When Using The Optional Battery.....17
When Charging For The Optional Battery.....18
Power & Display Switch.....19
Display When Power Switch Is Turned On.....20
Power Off Forgotten Alarm & Auto Power Off.....20
Trim/Dial Lock.....20
Steering Wheel And Throttle Trigger Operation.....21
Digital Trim Operation.....21
Mechanical ATL Adjustment.....22
Wheel & Trigger Tension Adjustment.....22
Trigger Slide Adjustment & Remove The High Point Spring.....23
Trigger brake lever replacement.....23
Changing Wheel Position And Modifying For Left-hand Use..24
Exchange procedure to wheel adaptor 32 deg.....24
Installing the accessory APA steering wheel offset adapter.....24
Modifying for left-hand use.....27
Using the optional angle spacer.....29
Non-telemetry LED (telemetry OFF sign).....29
Handling the antenna and card slot and receiver.....30
About The Transmitter Antenna.....30
Receiver Terminology.....30
Receiver Installation.....30
Handling an microSD card (commercial product).....31

Installation 32

Receiver And Servo Connections.....32
Installation Safety Precautions.....33

Initial Set-Up 36

Preparations (Transmitter).....36
RF Output & Rx Type Check 36
Receiver system Change & How To Link 37
Receivers Other Than T-FHSS 39
Response Mode/ SR Check 40
Trigger Ratio Check.....42
Trims Initial Set-Up.....42

Function Map 44

Menu Selection 44
Calling The Menu Screen.....44
Home Button Setting.....45
Value Of Each Function And Changing The Set Value 46
User Menu 47
Displaying And Editing The User Menu Screen 47
Function List.....48
Function Map 50

Functions 51

Receiver (Telemetry function ON/OFF) 52
Channel Reverse 53
Servo operation reversing
Subtrim.....54
Servo center position fine adjustment
End Point.....55
End point adjustment
Fail-Safe/ Battery Fail-Safe Function 58
Fail safe, battery fail safe function
Acceleration.....60
Function which adjusts the movement characteristic from the throttle neutral position
Trigger 62
Throttle Servo Neutral Position/ Neutral Brake
Servo View.....64
D/R, ATL.....65
Steering D/R, Throttle ATL Rate
Trim Dial Select 66
Selection of functions operated by digital trim and dial
Switch Select 69
Selection of functions operated by switch
Idle-Up 72
Idle up at engine start
Channel limiter 74
Limit the maximum operating amount of servo
Channel Setting.....75
Ability to assign steering or throttle to any channel

Condition **76**
Two kinds of data can be set in one model
Curve (EXP) **78**
Steering operation curve/ Throttle curve/ Brake curve adjustment.
Steering curve 78
Throttle curve (Forward side) 80
Brake curve 83
Speed **84**
Steering/ Throttle servo delay adjustment
Steering speed 84
Throttle speed 86
A.B.S. **90**
Pulse brake
Traction control **95**
Function to make traction progress by intermittently moving the throttle
Start **99**
Throttle preset at start function
Steering Mixing **103**
Twin servo steering system
Brake Mixing **106**
Front and rear independent brake control for 1/5 GP car, etc.
Gyro Mixing **110**
Use to set the Futaba car rate gyro
4WS Mixing **113**
Special mixing used with Crawler and other 4WS type vehicles
Dual ESC **116**
Front ESC and rear ESC
CPS Mixing **118**
Controls the Futaba CPS-1 channel power switch
Tank Mixing **120**
This function is intended for vehicles such as tanks
Tilt Mixing **125**
Outboard engine
Timer Function **127**
Up, Fuel down, lap, or lap navigation timer
Lap List **134**
Lap timer data (lap time, average lap time) check
S.BUS Servo **135**
Special function, Futaba S.BUS/S.BUS2 servo parameter / SR mode setup
MC Link (ESC Link) **140**
Special function, Futaba ESC (MC960CR, MC851C, MC602C, MC402CR...etc.)
Roll Out Chart **149**
Gear Ratio Chart **150**
HOME Button Setting **151**
Telemetry System **152**

Telemetry **153**
Telemetry :Receiver Battery 154
Telemetry :The Drive Battery Voltage 155
Telemetry :RPM 156
Telemetry :Temperature 157
Telemetry :The Drive Battery Electric Current 158
Telemetry :GPS 160
Sensor List **162**
Sensor 164
Sensor Reload 165
Change Slot 167
Speech guide interval and log data interval setting 168
Telemetry meter display on home screen 168
Telemetry meter display settings 169
Model Select **170**
Model memory call
Model Copy **171**
Model memory copy
Model Name **173**
Model memory name set/modify
Model Delete (Model saved on microSD card) **174**
Deletes model data saved on the microSD card
Data Reset **175**
Model memory reset
Display **176**
Information **178**
Sound **180**
Battery **181**
Data And Time **182**
LED Setting **183**
Calibration **184**
Software update **186**

Reference **187**

Ratings **187**
Warning Displays **189**
Optional Parts **191**
When requesting repair **192**

For Your Safety As Well As That Of Others

Use this product in a safe manner. Please observe the following safety precautions at all times.

Explanation Of Symbols

Please observe the following precautions to ensure safe use of this product at all times.
Meaning of Special Markings:
The parts of this manual indicated by the following marks require special attention from the standpoint of safety.

For safe use

⚠Danger	Procedures which may lead to dangerous conditions and cause death/serious injury if not carried out properly.
⚠Warning	Procedures which may lead to a dangerous condition or cause death or serious injury to the user if not carried out properly, or procedures where the probability of superficial injury or physical damage is high.
⚠Caution	Procedures where the possibility of serious injury to the user is small, but there is a danger of injury, or physical damage, if not carried out properly

Symbols: ⃠ : Prohibited ❗ : Mandatory

WARNING: Always keep electrical components away from small children.

Receiver Mode Precautions

⚠Caution

❗ Be sure to use the T7PX receiver setting and the servo to be used under predetermined conditions.
Under other conditions, the set will not operate, or the specified performance will not be displayed even if it operates. In addition, it may cause servo trouble. Futaba will not be responsible for damage, etc. caused by combination with the products of other companies.

System	Response / SR node	Usable servos
T-FHSS SR	SR mode channel: ON	- SR mode of Futaba SR compatible servo.
	SR mode channel: OFF	- Normal mode of Futaba SR compatible servo. - Futaba digital servo.
T-FHSS	Digital servo	- Normal mode of Futaba SR compatible servo. - Futaba digital servo.
	Analog servo	- Futaba all servo. (Normal mode of Futaba SR compatible servo.-
S-FHSS	Digital servo	- Normal mode of Futaba SR compatible servo. - Futaba digital servo.
	Analog servo	- Futaba all servo. (Normal mode of Futaba SR compatible servo.
FASST	Digital servo	- Normal mode of Futaba SR compatible servo. - Futaba digital servo.
	Analog servo	- Futaba all servo. (Normal mode of Futaba SR compatible servo.)

Receiver's battery:Matched to the ratings of the receiver and connected servo (dry cell battery cannot be used).

In addition, the FSU Fail Safe Unit cannot be used because the system is different. Use the fail safe function of the transmitter.

Operation Precautions

⚠ Warning

⊘ Do not operate outdoors on rainy days, run through puddles of water or use when visibility is limited.

Should any type of moisture (water or snow) enter any component of the system, erratic operation and loss of control may occur.

⊘ Do not operate in the following places.

-Near other sites where other radio control activity may occur.
-Near people or roads.
-On any pond when passenger boats are present.
-Near high tension power lines or communication broadcasting antennas.

Interference could cause loss of control. Improper installation of your Radio Control System in your model could result in serious injury.

⊘ Do not operate this R/C system when you are tired, not feeling well or under the influence of alcohol or drugs.

Your judgment is impaired and could result in a dangerous situation that may cause serious injury to yourself as well as others.

⊘ Do not touch the engine, motor, speed control or any part of the model that will generate heat while the model is operating or immediately after its use.

These parts may be very hot and can cause serious burns.

❗ Always perform an operating range check prior to use.

Problems with the radio control system as well as improper installation in a model could cause loss of control.

(Simple range test method)

Have a friend hold the model, or clamp it down or place it where the wheels or prop cannot come in contact with any object. Walk away and check to see if the servos follow the movement of the controls on the transmitter. Should you notice any abnormal operation, do not operate the model. Also check to be sure the model memory matches the model in use.

❗ Turning on the power switches.
Always check the throttle trigger on the transmitter to be sure it is at the neutral position.

1. Turn on the transmitter power switch.
2. Turn on the receiver or speed control power switch.

Turning off the power switches

Always be sure the engine is not running or the motor is stopped.

1. Turn off the receiver or speed control power switch.
2. Then turn off the transmitter power switch.

If the power switches are turned off in the opposite order, the model may unexpectedly run out of control and cause a very dangerous situation.

❗ When making adjustments to the model, do so with the engine not running or the motor disconnected.

You may unexpectedly lose control and create a dangerous situation.

❗ Before running (cruising), check the fail safe function.

Check Method; Before starting the engine, check the fail safe function as follows:

1) Turn on the transmitter and receiver power switches.

2) Wait at least one minute, then turn off the transmitter power switch. (The transmitter automatically transfers the fail safe data to the receiver every minute.)

3) Check if the fail safe function moves the servos to the preset position when reception fails.

The fail safe function is a safety feature that minimizes set damage by moving the servos to a preset position when reception fails. However, if set to a dangerous position, it has the opposite effect. When the reverse function was used to change the operating direction of a servo, the fail safe function must be reset.
Setting example: Throttle idle or brake position

NiMH / NiCd / LiFe Battery Handling Precautions

(Only when NiMH/NiCd /LiFe batteries are used)

⚠Warning

⊘ Never plug the charger into an outlet of other than the indicated voltage.

Plugging the charger into the wrong outlet could result in an explosion or fire.

⊘ Never insert or remove the charger while your hands are wet.

You may get an electric shock.

⊘ Do not use the T7PV transmitter's battery as the receiver's battery.

Since the transmitter's battery has an overload protection circuit, the output power will be shut down when the high current load is applied. This may result in runaway or fatal crash.

❗ Always check to be sure your batteries have been charged prior to operating the model.

Should the battery go dead while the model is operating, loss of control will occur and create a very dangerous situation.

❗ To recharge the transmitter battery, use the special charger made for this purpose.

Overcharging could cause the battery to overheat, leak or explode. This may lead to fire, burns, loss of sight and many other types of injuries.

⚠Caution

⊘ Do not use commercial AA size NiCd and NiMH batteries.

Quick charging may cause the battery contacts to overheat and damage the battery holder.

⊘ When running (cruising), do not use the dry cell battery box at the transmitter.

The accessory dry cell battery box is for performance checks. Do not use it for other than performance checks. The dry cell batteries will be separated from the battery box contacts by shock and the power may be cut off. There is the danger of collision if the power is cut while running (cruising). The use of Futaba genuine NiMH or LiFe batteries is strongly recommended.

⊘ Do not short circuit the battery terminals.

A short circuit across the battery terminals may cause abnormal heating, fire and burns.

⊘ Do not drop the battery or expose it to strong shocks or vibrations.

The battery may short circuit and overheat; electrolyte may leak out and cause burns or chemical damage.

⊘ Do not connect the charger when the battery is not connected.

A load will be applied to the circuit and the transmitter may be damaged.

❗ When the model is not being used, always remove or disconnect the battery.

Leaving the battery connected could create a dangerous situation if someone accidentally turns on the receiver power switch. Loss of control could occur.

❗ Always keep the charger disconnected from the outlet while it is not in use.

Prevent accidents caused by abnormal heat generation etc.

Storage And Disposal Precautions

⚠Warning

⊘ Do not leave the radio system or models within the reach of small children.

A small child may accidentally operate the system. This could cause a dangerous situation and injuries. NiCd batteries can be very dangerous when mishandled and cause chemical damage.

⊘ Do not throw NiMH/NiCd/LiFe batteries into a fire. Do not expose batteries to extreme heat. Also do not disassemble or modify a battery pack.

Overheating and breakage will cause the electrolyte to leak from the cells and cause skin burns, loss of sight, and other injuries.

❗ When the system will not be used for any length of time, store the system with NiMH/NiCd batteries in a discharged state. Be sure to recharge the batteries prior to the next time the system is used.

If the batteries are repeatedly recharged in a slightly discharged state, the memory effect of the NiMH/NiCd battery may considerably reduce the capacity . A reduction in operating time will occur even when the batteries are charged for the recommended time. (After discharge to 1cell E.V.=1V)

❗ When a LiFe battery pack will not be used for a long time, to prevent it from deteriorating we recommend that it be kept in about the half capacity state instead of fully charged. Also be careful that the battery does not enter the over-discharged state due to self-discharge.

Periodically (about every 3 months) charge the battery.

⚠Warning

⊘ Do not store your R/C system in the following places.

- Where it is extremely hot or cold.
- Where the system will be exposed to direct sunlight.
- Where the humidity is high.
- Where vibration is prevalent.
- Where dust is prevalent.
- Where the system would be exposed to steam and condensation.

Storing your R/C system under adverse conditions could cause deformation and numerous problems with operation.

❗ If the system will not be used for a long period of time, remove the batteries from the transmitter and model and store in a cool, dry place.

If the batteries are left in the transmitter, electrolyte may leak and damage the transmitter. This applies to the model also. Remove the batteries from it also to prevent damage.

<NiMH/NiCd Battery Electrolyte>

The electrolyte in NiCd/NiMH batteries is a strong alkali. Should you get even the smallest amount of the electrolyte in your eyes, DO NOT RUB. Wash immediately with water, and seek medical attention at once. The electrolyte can cause blindness. If electrolyte comes in contact with your skin or clothes, wash with water immediately.

<NiMH/NiCd/LiFe Battery Recycling>

A used battery is a valuable resource. Insulate the battery terminals and dispose of the battery by taking it to a battery recycling center.

Other Precautions

⚠Caution

⊘ Do not expose plastic parts to fuel, motor spray, waste oil or exhaust.

The fuel, motor spray, waste oil and exhaust will penetrate and damage the plastic.

❗ Always use only genuine Futaba transmitters, receivers, servos, ESCs (electronic speed controls), NiMH/NiCd/LiFe batteries and other optional accessories.

Futaba will not be responsible for problems caused by the use of other than genuine Futaba parts. Use the parts specified in the instruction manual and catalog.

Features

-Full color touch screen LCD
T7PX has an HVGA 4.3 inch, full-color, backlit LCD touch screen. The screen is transflective which enables both indoor and outdoor visibility.

-T-FHSS SR(Super response) & telemetry T-FHSS
In addition to the T- FHSS telemetry system, we added a T-FHSS SR (Super respons) system that increased processing speed to further improve response. (SR system does not support telemetry function)

-Updateable software
Software can be updated by microSD card. Model data can also be saved in a microSD card. In addition, telemetry log data can be saved.

-Model memory for 40 models
Model names can use up to 15 letters, numbers, and symbols, so that logical names may be used. A model memory with different setups can be created by using the model copy function.

-NFC communication
It is possible to update the T7PX itself in the future by NFC communication.

-Integral type dial switch
Adopted a switch with both dial (DL1) and push switch (PS6) functions.

-Brake mixing for large cars
Brake mixing of the front and rear wheels of 1/5GP and other large cars can be adjusted independently.

-Steering mixing
Smooth cornering is possible by independent left and right steering servo setting.

-4WS mixing for crawlers and other 4WS type
This function can be used with crawlers and other 4-wheel steering type vehicles.

-Dual ESCs mixing for crawlers
ESC at the front and rear are controlled independently.

-Gyro mixing
The sensitivity of Futaba car rate gyros can be adjusted from the T7PX.

-Tank mixing
This function is intended for vehicles such as tanks.

-CPS mixing
LED lighting and flashing control using our CPS-1 channel power switch can be matched to steering and throttle operation by switch only.

-S.BUS servo
This is a special function that allows setting of the parameters of our S.BUS servo whose settings are changed by using PC Link software.

-MC-Link
This is a dedicated function which allows setting of the contents of the Link software which makes possible Futaba speed controller (ESC), MC960CR, MC950CR, MC850C, MC851C, MC602C, MC402CR, etc. variable frequency and other data changes by PC at the T7PX.

-Throttle speed
Sudden trigger operation on a slippery road surface will only cause the tires to spin and the model to not accelerate smoothly. By setting the throttle speed function, operation can be performed smoothly and easily. It also suppresses battery consumption.

-Steering speed
When you sense that the steering servo is too fast, etc., the servo operating speed (direction that suppresses the maximum speed) can be adjusted.

-Non-telematry LED
When the telemetry function is OFF to confirm that the telemetry function is not operating.

-Dial select function
This function assigns functions to dials (digital trim, grip dial, knob). The step amount and operating direction can also be adjusted. Trim positioning at each model call is unnecessary because all the dials are digital.

-Switch select function
This function assigns functions to 5 switches. The operating direction can also be set.

-Wheel & Trigger position can be changed
The wheel position can be offset by using an accessory APA wheel position offset adapter.
The wheel angle can also be adjusted.
The position of the throttle trigger can be moved forward and backward.

-Trigger brake lever replacement
The trigger brake lever is selected from a narrow nylon type and wide type

-Trim/dial lock functions
Lock functions which prohibit setting and operation by transmitter trim, and dials are provided.

-Left-handed support
The left and right installation direction of the wheel section can be reversed.

-Vibrator built into the grip
The vibrator can be operated at racing timer lap navigation, time-up, and low battery, telemetry alarm. It sets it on each function screen.

Set Contents

After opening the box, first check if the contents conform to the following. The contents depend on the set as shown below.

Transmitter / Receiver	T7PX / R334SBS
Miscellaneous	**Dry battery holder** *Installed in transmitter. **Wheel offset adapter(APA)** **Wheel adapter 32deg** **Trigger brake lever (narrow type)** **Miniature screwdriver** **Screen protector** **Instruction manual**

- If any of the set contents are missing, or you have any questions, please contact your dealer.

⚠Caution

❗ Be sure to use the T7PX receiver setting and the servo to be used under predetermined conditions.

Under other conditions, the set will not operate, or the specified performance will not be displayed even if it operates. In addition, it may cause servo trouble. Futaba will not be responsible for damage, etc. caused by combination with the products of other companies.

System	Response / SR node	Usable servos
T-FHSS SR	SR mode channel: ON	- SR mode of Futaba SR compatible servo.
	SR mode channel: OFF	- Normal mode of Futaba SR compatible servo. - Futaba digital servo.
T-FHSS	Digital servo	-Normal mode of Futaba SR compatible servo. - Futaba digital servo.
	Analog servo	- Futaba all servo. (Normal mode of Futaba SR compatible servo.)
S-FHSS	Digital servo	- Normal mode of Futaba SR compatible servo. - Futaba digital servo.
	Analog servo	- Futaba all servo. (Normal mode of Futaba SR compatible servo.
FASST	Digital servo	- Normal mode of Futaba SR compatible servo. - Futaba digital servo.
	Analog servo	- Futaba all servo. (Normal mode of Futaba SR compatible servo.)

❗ Always use only genuine Futaba transmitters, receivers, servos, ESCs (electronic speed controls), Ni-MH/Ni-Cd/LiFe batteries and other optional accessories.

Futaba will not be responsible for problems caused by the use of other than Futaba genuine parts. Use the parts specified in the instruction manual and catalog.

Receiver's battery: Matched to the ratings of the receiver and connected servo (dry cell battery cannot be used).

In addition, the FSU Fail Safe Unit cannot be used because the system is different. Use the fail safe function of the transmitter.

Transmitter T7PX

Nomenclature

*The switches, dial, and trimmers in the figure are shown in the initial setting position.
*Please be careful not too strongly pressed the push switch.

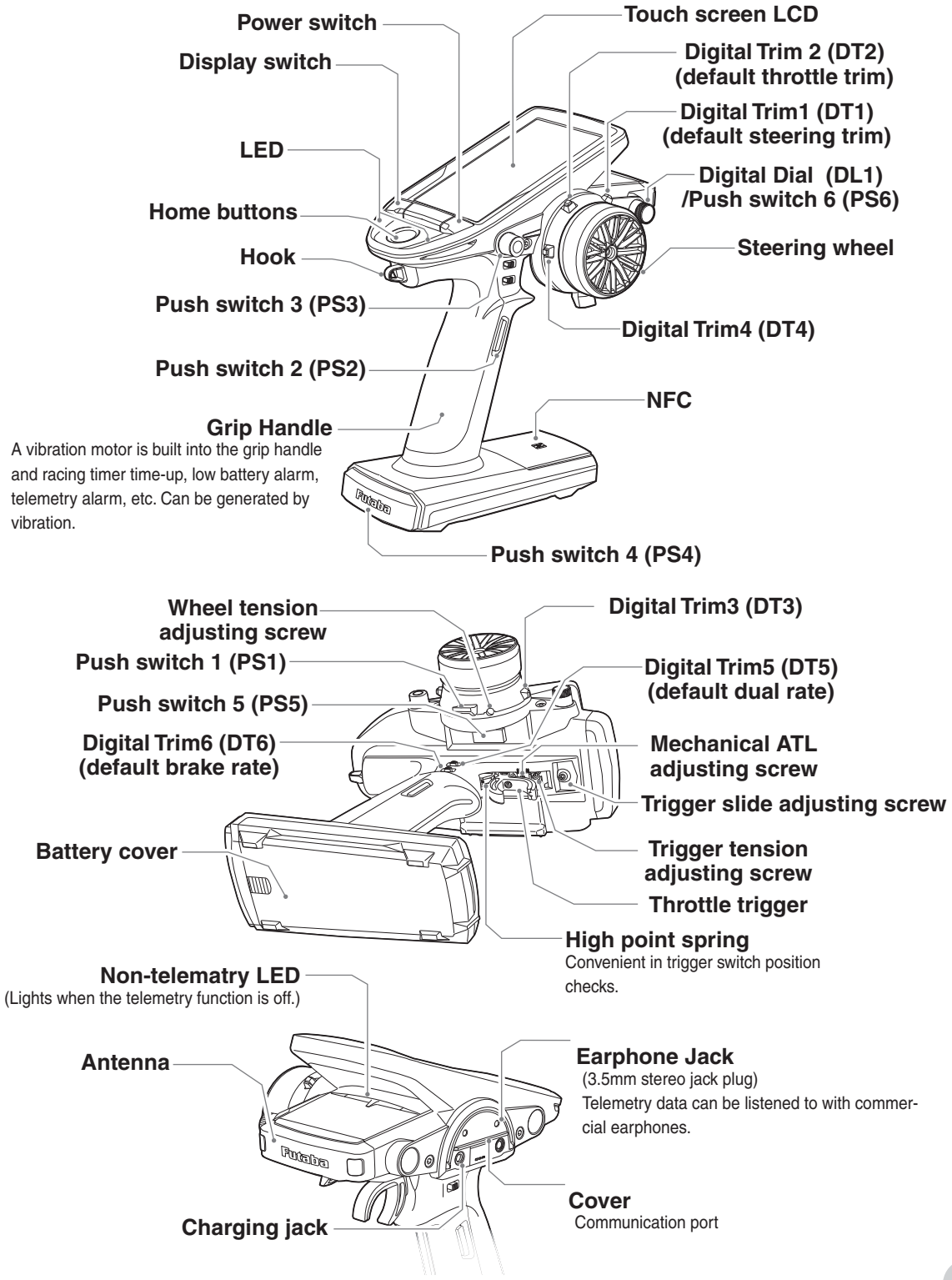

Battery Replacement Method (4 AA Size Batteries)

Load the four batteries in accordance with the polarity markings on the battery holder.

Battery Replacement Method

1 Remove the battery cover from the transmitter by sliding it in the direction of the arrow in the figure.

2 Remove the used batteries.

⚠Caution

❗If you remove the dry cell battery box from the transmitter, replace it carefully with the wiring on the same side as before. Reinstalling the battery box in the opposite direction could cause the wires to be disconnected.

3 Load the new AA size batteries. Pay very close attention to the polarity markings and reinsert accordingly.

4 Slide the battery cover back onto the case.

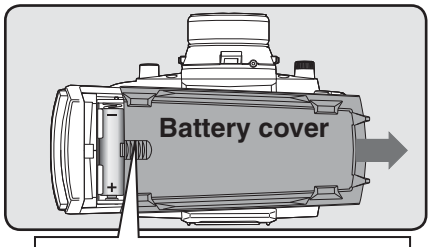

Slide battery cover while pressing here.

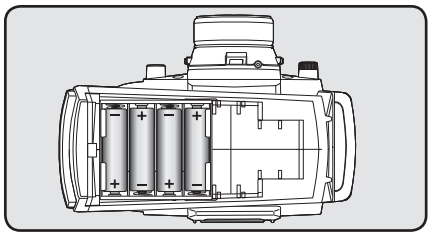

Check:

Turn the power switch on the transmitter to the ON position. Check the battery voltage display on the LCD screen. If the voltage is low, check the batteries for insufficient contact in the case or incorrect battery polarity.

Disposal of the Dry Cell Batteries:

The method to dispose of used dry cell batteries depends on the area in which you reside. Dispose of the batteries in accordance with the regulations for your area.

⚠Caution

⊘ Never try to recharge a dry cell battery.

The transmitter may be damaged or the battery electrolyte may leak or the battery may break.

❗ Insert the batteries in the correct polarity.

If the polarity is incorrect, the transmitter may be damaged.

❗ When the transmitter is not in use, remove the batteries.

If the battery electrolyte leaks, wipe off the case and contacts.

⊘ Do not use commercial AA size NiCd and NiMH batteries.

Quick charging may cause the battery contacts to overheat and damage the battery holder.

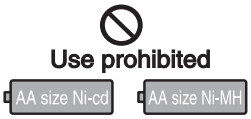

Low Battery Alarm

If the transmitter battery voltage drops below the usable range, an audible alarm will sound and "Low battery" will be displayed (For details, see page 189). Since the usable range of NiMH batteries and LiFe batteries is different, the power supply used must be set by system setting (page 181). If the battery goes dead while running (cruising), since there is the danger of collision, immediately recover the vehicle (boat) and stop running (cruising).

⚠Warning

❗ When a low battery alarm is generated, cease operation immediately and retrieve the model.

If the battery goes dead while in operation, you will lose control of the model.

When Using The Optional Battery

When using an optional rechargeable battery, replace the battery as described below.
-Always use the optional FT2F1700B , FT2F2100B or HT5F-1800B rechargeable battery.
-The type of power source used must be selected through the system setting (page 181).
-When the transmitter will not be used for a long time, remove the battery.

Battery Replacement Method

1 Refer to the previous description and remove the transmitter battery cover.

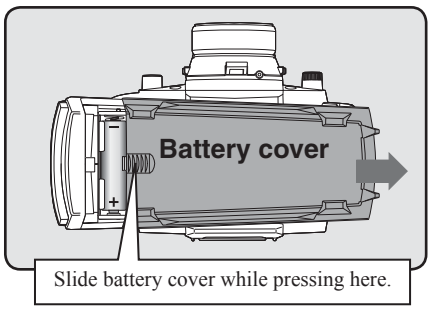

2 After removing the dry cell battery box from the transmitter, disconnect the connector.

⚠Caution

❗If you remove the dry cell battery box from the transmitter, replace it carefully with the wiring on the same side as before. Reinstalling the battery box in the opposite direction could cause the wires to be disconnected.

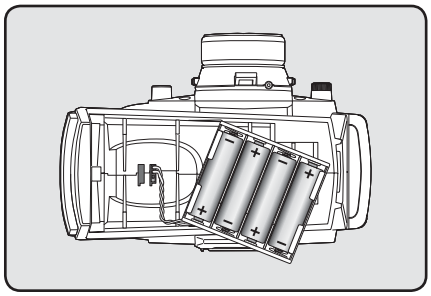

3 Insert the connector of the new battery and load the new battery into the transmitter.

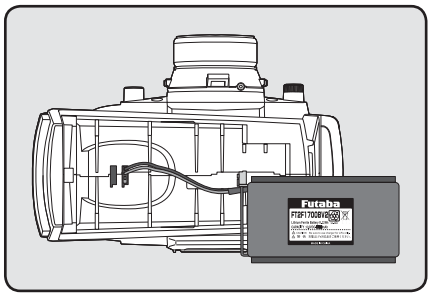

4 Finish by installing the battery cover.

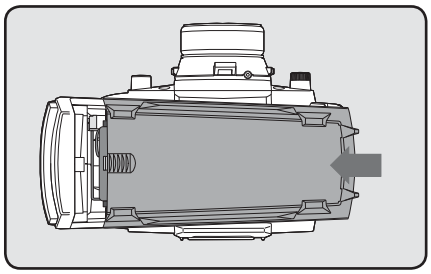

⚠Caution

❗ When closing the battery cover, be careful that the battery cover does not pinch the battery lead wires.

Shorting of the battery lead wires may lead to fire and abnormal heating and cause burns or fire disaster.

When Charging For The Optional Battery

Charging A NiMH Battery

(Example: When using the HT5F1800B with the special charger)

1 Plug the transmitter cord of the special charger into the charging jack on the rear of the transmitter.

2 Plug the charger into an AC outlet.

3 Check that the charging LED lights.

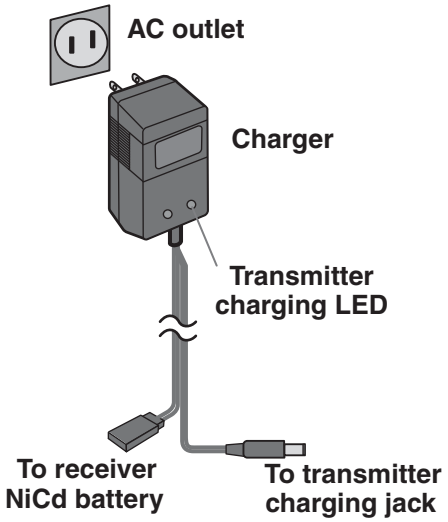

The charging time when charging the HT5F1800B battery with the optional special charger is approximately 15 hours. However, when the battery has not been used for some time, repeat charging 2 or 3 times to activate the battery.

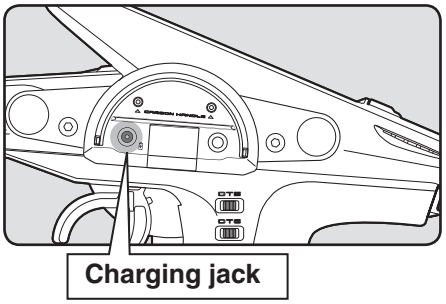

Over current protection

The transmitter charging circuit is equipped with an over current protection circuit (1.0A). If the battery is charged with a quick charger for other than digital proportional R/C sets, it may not be fully charged.

Charging A LiFe Battery

(Example: When using the FT2F1700B/2100B with the special charger)

1 Remove the battery cover.

2 Disconnect the battery from the T7PX.

3 Balance charging cannot be done through the transmitter. You must remove the LiFe battery to do this charge.

Charge the optional FT2F1700B/2100B (LiFe) battery with the special charger in accordance with the instruction manual supplied.

When the LiFe battery will not be used for a long time, to prevent it from deteriorating we recommend that it be kept in about the half capacity state instead of fully charged. Also be careful that the battery does not enter the overdischarged state due to self-discharge. Periodically (about every 3 months) charge the battery. In addition, always remove the battery from the model and store it in a dry, cool place (15°C~25°C).

LiFe battery is removed from transmitter.

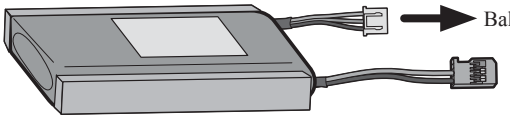

Balance charging connector for LiFe battery charger.

⚠Warning

- ⊘ Make sure not to peel off the battery film, or make any scratch by a cutter knife or the sharp edges of metal components.
- ⊘ Make sure not to soak or get the battery wet with water or seawater.
- ⊘ Make sure not to use a deformed or swollen battery.

There is a risk of explosion or fire, which is very dangerous.

⚠Warning

⊘ Never plug it into an outlet having other than the indicated voltage.

Plugging the charger into the wrong outlet could result in an explosion or fire.

⊘ Do not insert and remove the charger when your hands are wet.

It may cause an electric shock.

❗ Always use the special charger or a quick charger for digital proportional R/C sets to charge a digital proportional R/C set battery.

Overcharging a NiMH battery can result in burns, fire, injuries, or loss of sight due to overheating, breakage, or electrolyte leakage.

⚠Caution

⊘ Do not plug the charger to the charging jack, if the battery is not connected to the transmitter.

The transmitter may be damaged.

❗ When the charger is not in use, disconnect it from the AC outlet.

Do this to prevent accidents and to avoid overheating.

Power & Display Switch

The power switch and display switch are push switches.

When the power switch (PWR) is held down, operation starts by transmitting radio waves. When the display switch (DSP) is held down, the transmitter side data can be checked and set. When the power is turned off, if the power switch or display switch is held down, the power is turned off. If both switches are pressed simultaneously, the power is turned off quickly.

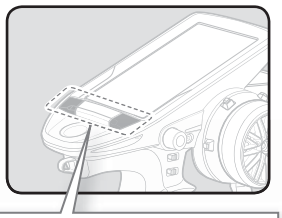

Power & Display Switch

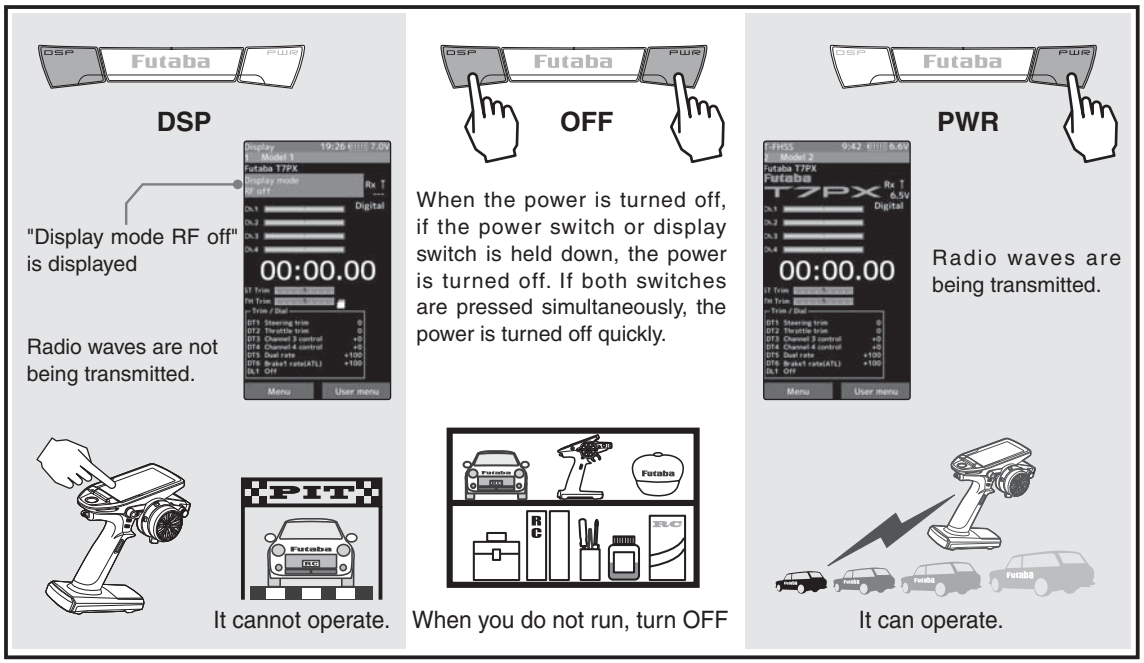

Display When Power Switch Is Turned On

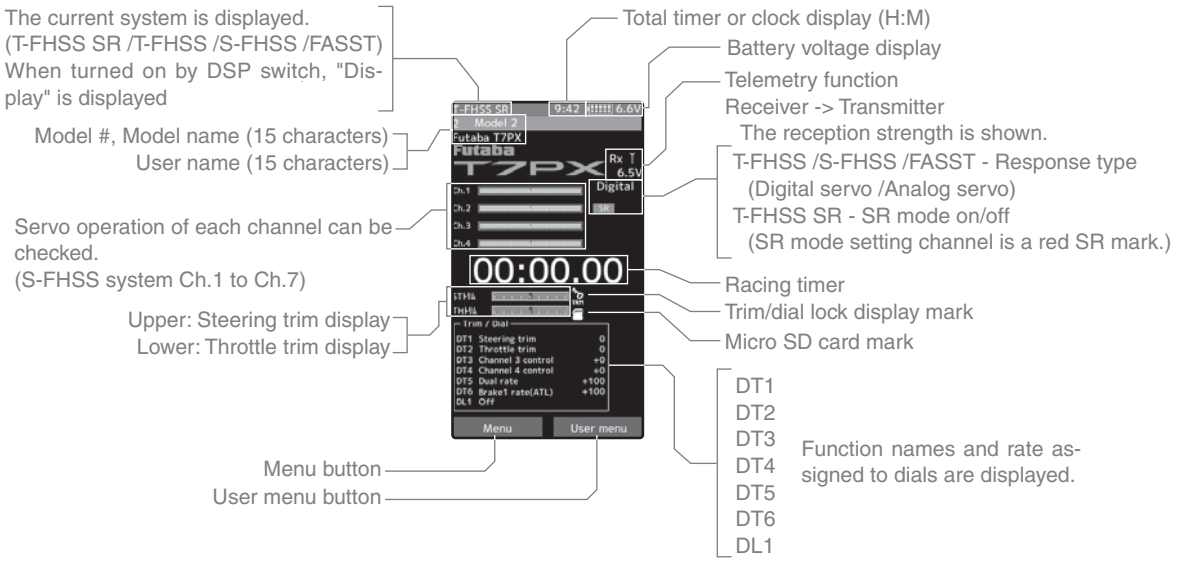

***The figure above is partly processed for explanation, so it is different from the actual screen display.**

Power Off Forgotten Alarm & Auto Power Off

At T7PX initialization, if steering wheel, throttle trigger, push switch, edit button, or other operation is not performed within 10 minutes, an audible alarm will sound and the message "Warning: Auto power off" will appear (For details, see page 189.) .

If steering wheel, throttle trigger, push switch, edit button or other operation is performed, the alarm is reset. Also turn off the power when the transmitter is not in use. If the alarm is not reset, the auto power off function will automatically turn off the power after 5 minutes. If you do not want to use this alarm and the auto power off function, they can be disabled by system setting (page 181).

Trim/Dial Lock

T7PX setup and operation by digital trim DT1, DT2, DT3, DT4, DT5 and DT6 and dials DL1 can be prohibited.

Setting

1 When the Home button is pressed for about 1 second at the initial screen, a confirmation beep is generated and the trim/dial lock display mark appears on the screen.

Clearing

1 Edit button lock and trim/dial lock can be cleared in the initial screen state by the same method as the setting described above. (The trim/dial lock display disappears from the screen.)

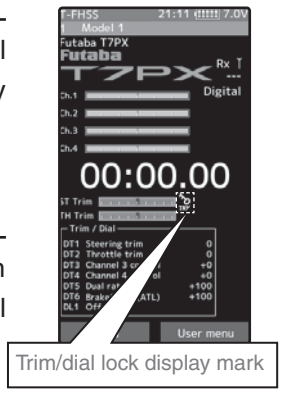

Steering Wheel And Throttle Trigger Operation

(CH1: Steering wheel, CH2: Throttle trigger)

Steering Wheel Function: Turns the model right or left.

Throttle Trigger Function: Controls the speed of the model as well as the direction of travel - forward or reverse.

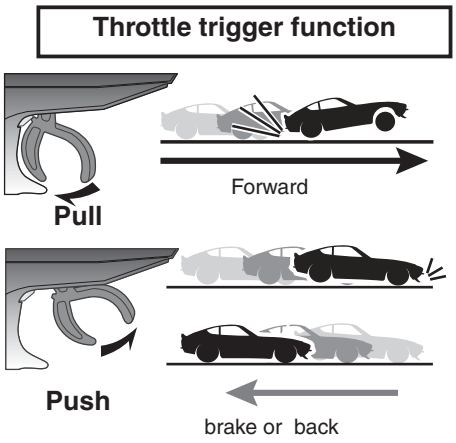

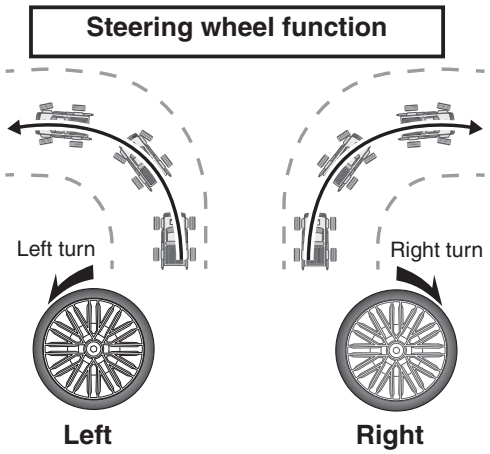

Digital Trim Operation

(Initial settings: DT1: Steering trim, DT2: Throttle trim, DT3: Channel 3, DT4: Channel 4, DT5: Steering D/R, DT6: ATL-Brake rate)

Operating by the trim: Push the trim lever to the left or right (up or down). The current position is displayed on the LCD screen.

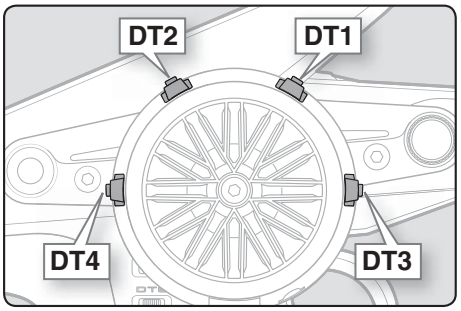

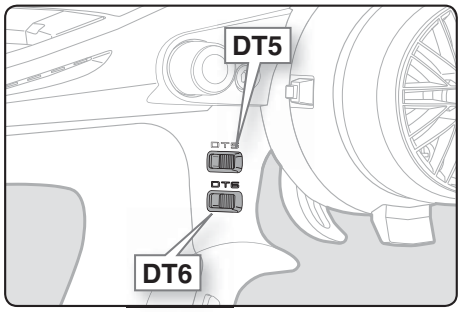

- Each step is indicated by a tone.
- When the trim exceeds the maximum trim adjustment range, the beep will change and the servo will not move any farther.
- When the steering wheel is neutral, adjust the steering trim so that the car goes straight without curving left and right.
- Adjust the throttle trim so that the car stops when the throttle trigger is in neutral so that the brake will not be applied when the throttle trigger is released during operation.
- Steering D/R :The steering left and right servo travels are adjusted simultaneously.
- ATL: Decreases the set value when the braking effect is strong and increases the set value when the braking effect is weak.

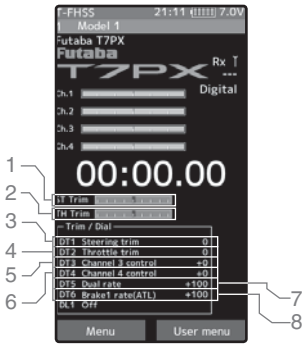

- 1/3-DT1 (Steering trim display)
- 2/4-DT2 (Throttle trim display)
- 5-DT3 (Channel. 3 display)
- 6-DT4 (Channel. 4 display)
- 7-DT5 (Steering D/R display)
- 8-DT5 (ATL display)

Steering And Throttle Trim Operation

With the center trim feature, trim adjustments have no effect on the maximum servo travel. This prevents the linkages from binding when adjustments are made.

Mechanical ATL Adjustment

Make this adjustment when you want to decrease the stroke of the brake (back) side of the throttle trigger for operation feel.

Adjustment

1 Using a 1.5mm hex wrench, adjust the trigger brake (reverse) stroke. (The screw moves the throttle trigger stopper.)

- When the screw is turned clockwise, the stroke becomes narrower. Adjust the stroke while watching the screw.

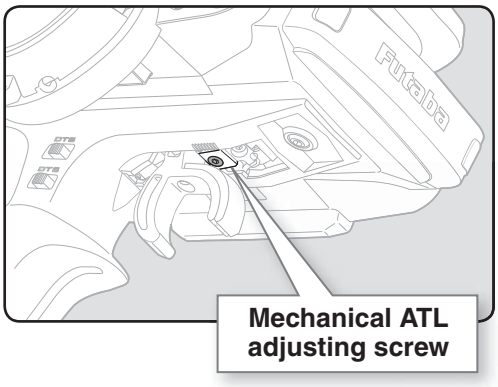

Note:

Once you have changed the mechanical stroke on the brake side, be sure to adjust the scale of the throttle channel accordingly by using the "Calibration Function" (page 184).

Due to this change, you also need to adjust in most cases the travel of the throttle servo by using "Data Setting."

Wheel & Trigger Tension Adjustment

Make this adjustment when you want to change the wheel or trigger spring's tension.

Adjustment

1 Using a 1.5mm hex wrench, adjust the wheel spring tension by turning the screw inside the adjusting hole.

- The spring is set to the weakest tension at the factory.
- When the adjusting screw is turned clockwise, the spring tension increases.

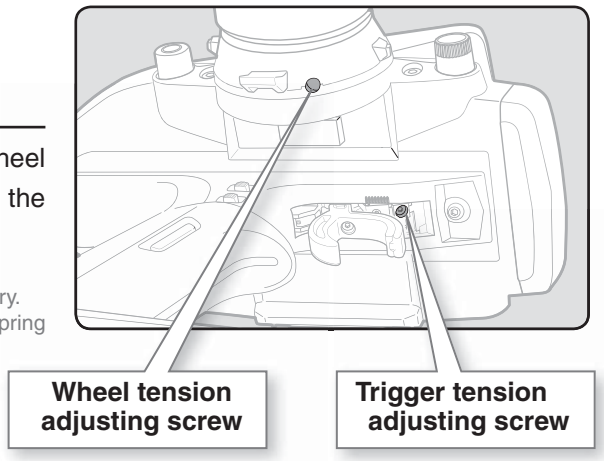

Note:

The adjustment range is up to 7 to 8 turns from the fully tightened (strongest) position. If turned farther than this, the adjusting screw may fall out.

Trigger Slide Adjustment & Remove The High Point Spring

The throttle trigger position can be moved forward and backward.

Adjustment

1 Using a 2.0mm hex wrench, loosen the trigger slide mounting screw by turning it slightly counterclockwise.

Always loosen this screw.

Note:

If the trigger slide screw is turned too much, the screw may fall out.

2 Adjust the trigger slide position within the marked range.

The high point spring can be removed by moving to the farthest from the grip.
When the high point spring is removed, perform throttle side correction by calibration function (page 184).

3 Retighten the mounting screw loosened at step 1 and fasten the trigger slide.

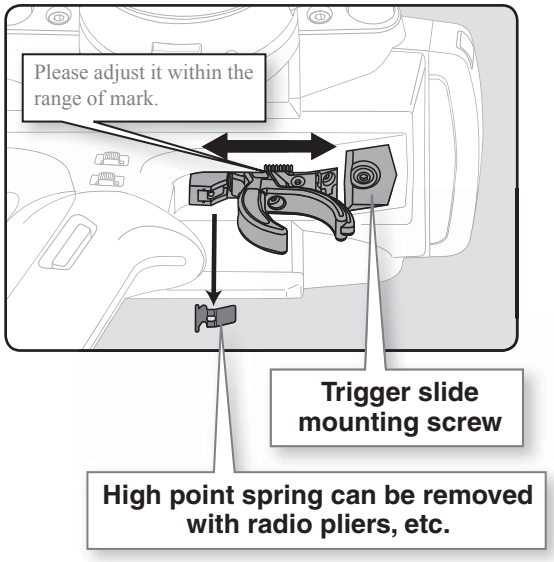

Trigger brake lever replacement

The trigger brake lever is selected from a narrow nylon type and wide type. (Narrow type is installed at the factory.)

*When the brake lever is changed, perform throttle side correction by adjuster function (page 184).

Brake lever replacement

Obtain a 1.5mm hex wrench. Remove the battery from the transmitter.

1 Hold the trigger, remove the brake lever mounting screw using the 1.5mm hex wrench, and remove the brake lever.

2 Using the 1.5mm hex wrench install the wide type brake lever with the brake lever mounting screw.

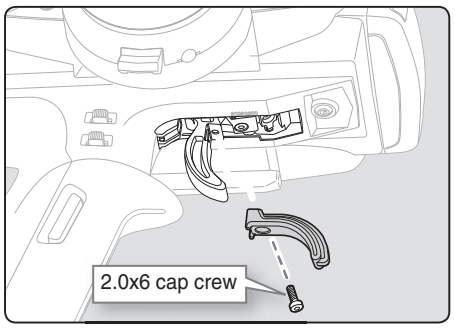

Changing Wheel Position And Modifying For Left-hand Use

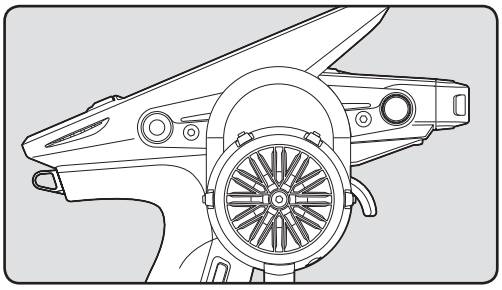

Changing the wheel position

The wheel position can be offset by using the accessory APA wheel position offset adapter.

(See page 25 for the modification method.)

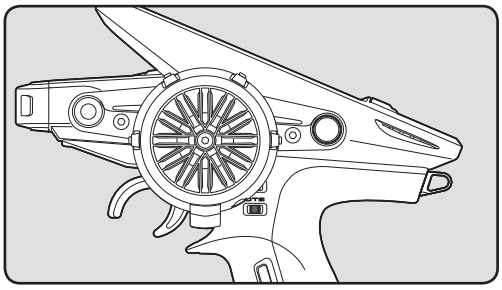

Modifying for left-hand use

The wheel section left and right installation direction can be reversed.

(See page 25 for the modification method.)

Angle can be adjusted

The angle can be finely adjusted by adjusting the steering wheel unit installation. (See the modification method on the next page for the adjustment details.)

The operating angle of the wheel can be adjusted

The operating angle of the wheel can be changed from 34 deg to 32 deg by installing the 32 deg wheel adjuster. (See "Exchange procedure to wheel adaptor 32 deg" below for the replacement procedure.

If you install the 32 deg wheel adapter, be sure to adjust the scale of the steering channel accordingly by using the "Calibration Function" (page 184).

Exchange procedure to wheel adaptor 32 deg

• Obtain 2.5mm hex wrench./ Remove the battery.

1 Hold the wheel and remove the screw.
(Using a 2.5 mm hex wrench.)

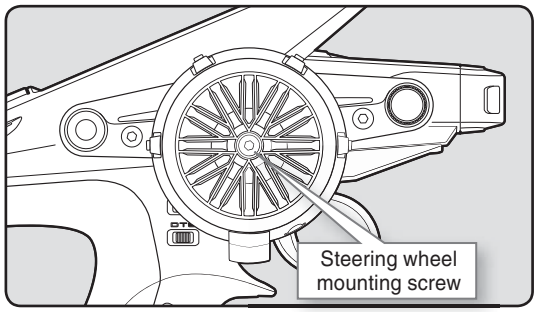

2 Pull off the wheel and wheel adapter.

3 Install the steering wheel and the 32 deg wheel adapter using the screw.
(Using a 2.5 mm hex wrench.)

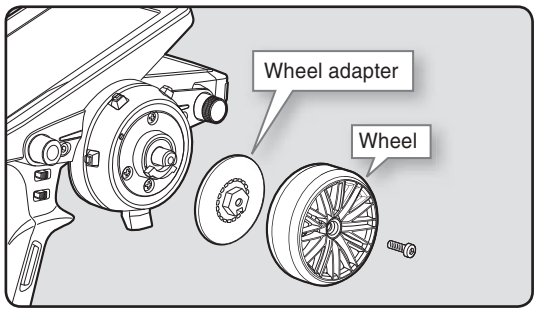

Installing the accessory APA steering wheel offset adapter

- Obtain 2.5mm hex wrench./ Remove the battery.
- The length of the screws used at each part differs. When reassembling the steering wheel unit, always use the specified screws.

1 Remove the 2 steering wheel unit mounting screws (3.0x12mm cap screw)

(Using a 2.5 mm hex wrench.)

Remove the 2 mounting screws completely from the transmitter body.

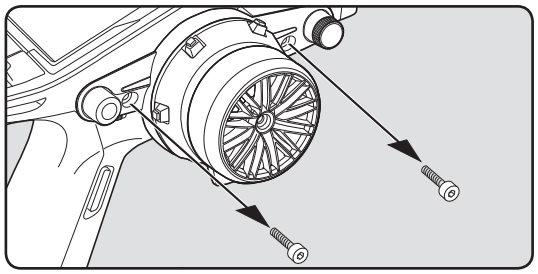

2 Gently remove the steering unit, without pulling excessively on the wiring.

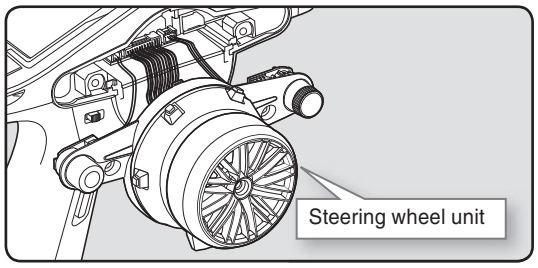

- Since there are claws on the top and bottom of the steering unit, please do not pull straight out forcefully.
- Please slowly remove in the order of 1→3 in the right figure.
- Remove the steering unit slowly so that the internal wiring is not pulled unreasonably.

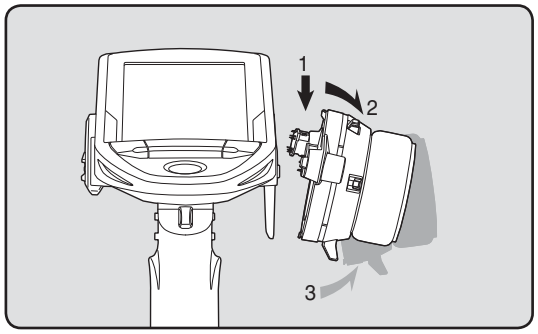

3 Remove the 3 connectors from the PC board.

Press the upper side of the connector to release the lock and remove it from the PC board.
(The 3 connectors each have the same lock type although they are different in size.)

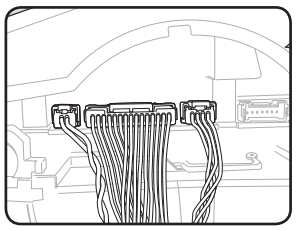

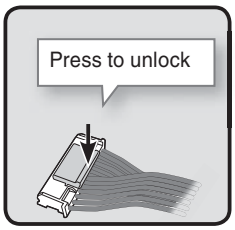

4 Using a Phillips screwdriver, remove the 4 screws (2.6x15mm tapping screw) mounting the wheel unit and switch unit.

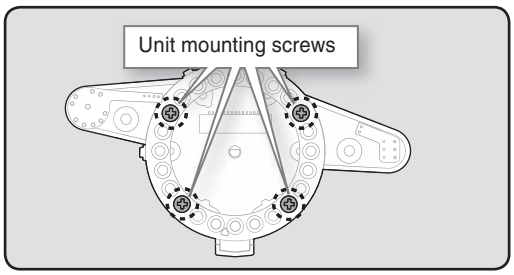

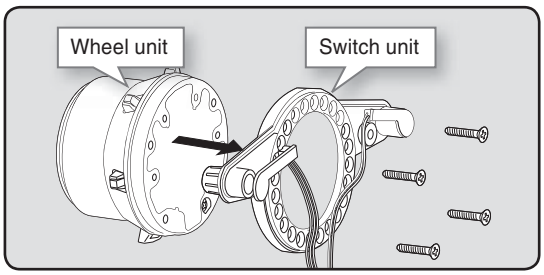

5 Pass the wiring from the steering wheel unit through the hole in the APA as shown in the figure. Using a Phillips screwdriver fasten the wheel unit and APA at the desired angle using the 2.6x19 tapping screws.

- Be careful that the screw length is correct. Be careful that the wiring does not get pinched.
- The 2.6x19 tapping screws in the accessory bag
- The angle can be adjusted, but check the marking point on the wheel unit and install the screws.
- Screws can be installed at 4 places, but installation at 4 places may be impossible due to the wheel unit mounting angle.

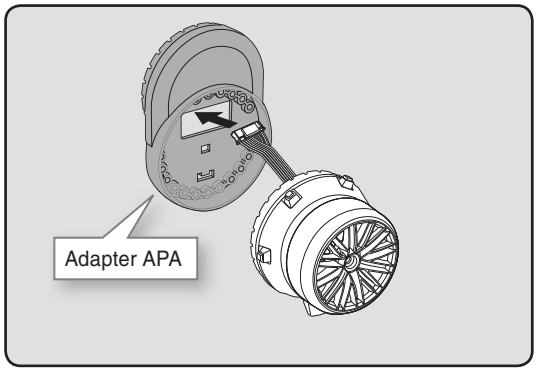

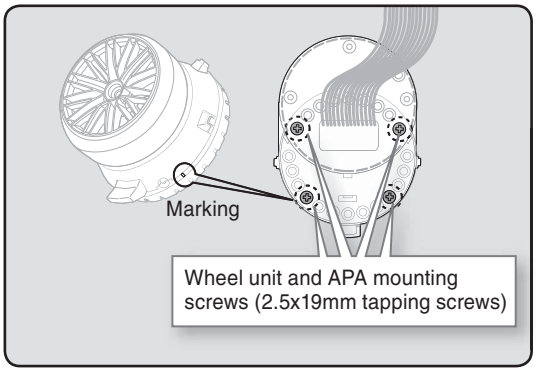

6 Using a Phillips screwdriver fasten the switch unit and APA. Use the 2.6x10mm tapping screws in the accessories bag. Next, install the APA rear cover. Be careful that the length of the screws is correct.

- The 2.6x10 tapping screws in the accessory bag

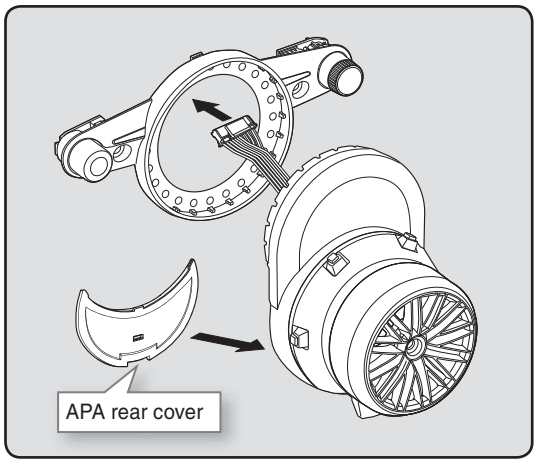

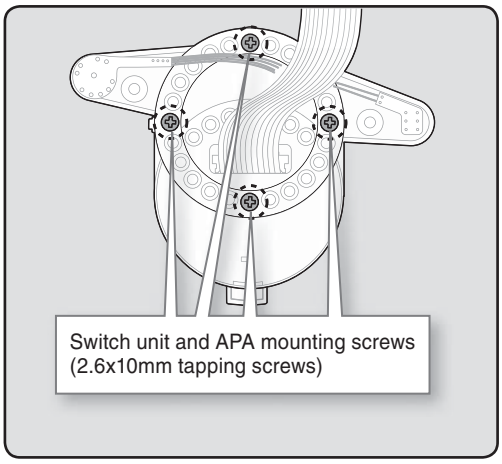

7 Install the assembled steering wheel unit to the transmitter body.

- From left to right, the order is 2 pin connector (PS3), 15 pin connector (wheel unit), 4 pin connector (DL1 / PS6).

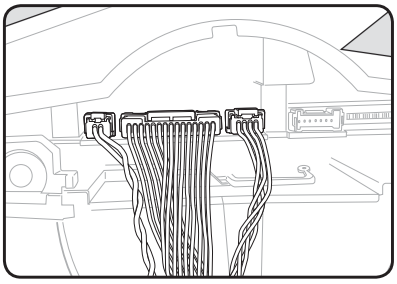

8 Install the assembled steering wheel unit and APA to the transmitter using the screw (3.0x12mm cap screw) supplied.

(Using a 2.5 mm hex wrench.)

- Install slowly so that the wiring is not pinched.
- Installation is easy if inserted in 1→2 order.

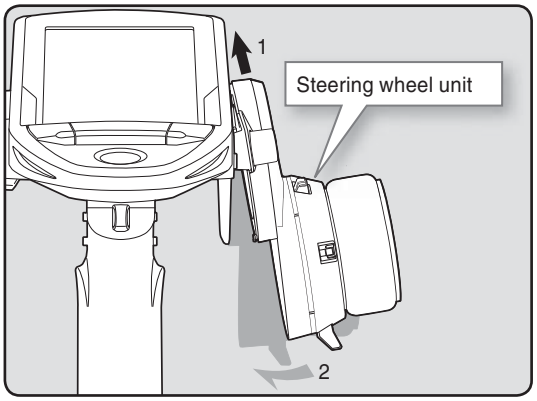

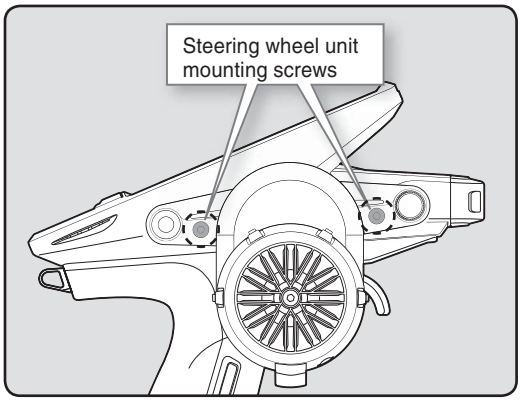

Modifying for left-hand use

- Obtain 2.5mm hex wrench.
- Refer to 1-2 (p.25) of the APA for the wheel position change installation method.

1 Slowly pull out the PS5 switch cap and mounting plate in the arrow direction.

- Be careful that the switch body does not get caught and damaged.

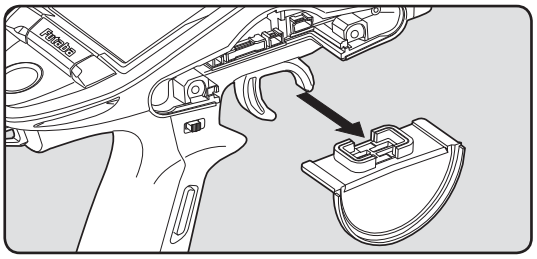

2 Using a 2.5mm hex wrench, remove the mounting screws (3.0x1.2mm cap) of the opposite side charge unit.

- Remove the 2 mounting screws completely from the transmitter body.

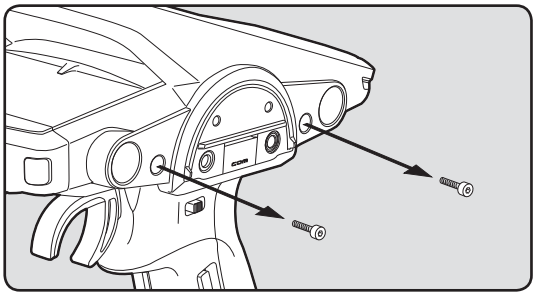

3 Being careful that the wiring is not too tight slowly remove the charge unit. Remove the connector from the PC board.

- Press the upper side of the connector to release the lock and remove it from the PC board (See page 25).

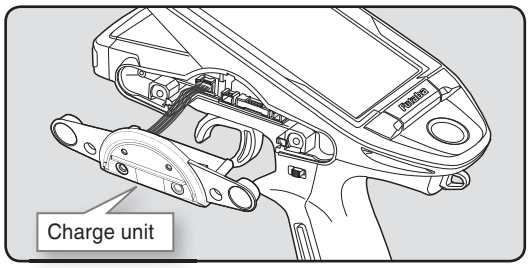

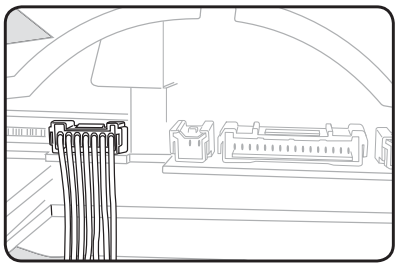

4 Install the charge unit to the connector on the opposite side of the transmitter body.

- Install slowly so that the wiring is not pinched.

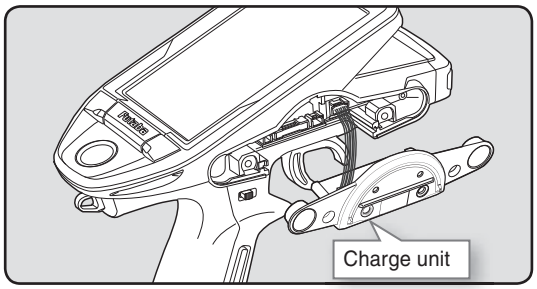

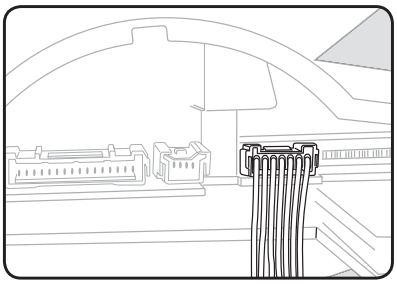

5 Using a 2.5 mm hex wrench, attach the charging unit and the transmitter body with fixing screws.

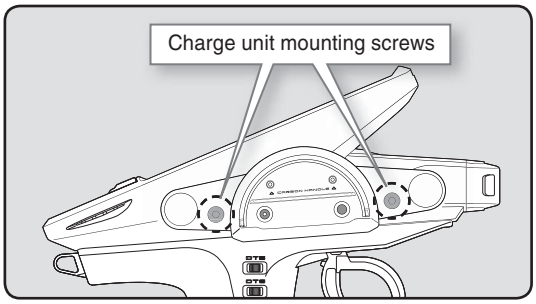

6 Install the PS5 switch cap and mounting plate removed at step 1 at the opposite side of the transmitter body.

- Be careful that the switch body does not get caught and damaged.

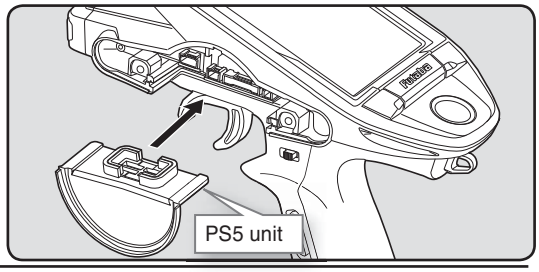

7 Insert the connector of the steering unit into the board on the opposite side of the transmitter and attach it to the main unit.

- Install slowly so that the wiring does not get pinched.
- Installation is easy when inserted in 1→2 order. (Figure at the right)

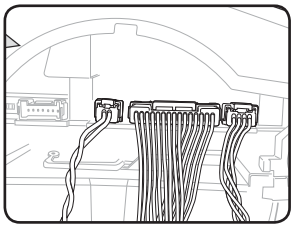

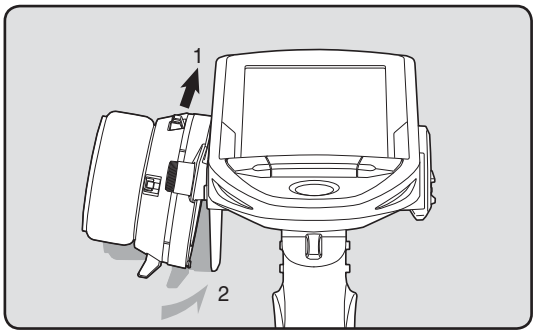

8 Install the assembled steering wheel unit to the transmitter using the screw (3.0x12mm cap screw) supplied.

(Using a 2.5 mm hex wrench.)

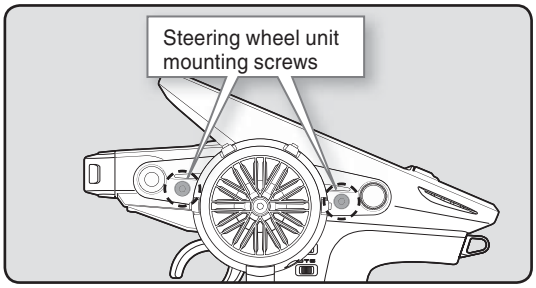

Using the optional angle spacer

The wheel mounting angle can be changed by using the optional angle spacer.

Three 2.6x10mm tapping screws are supplied with the angle spacer.
When using and not using the APA, refer to the following installation.
Obtain a Phillips screwdriver. Be careful of the length of the screws used.
Actually, since there is wiring, the wheel is assembled by passing the screws through each part.

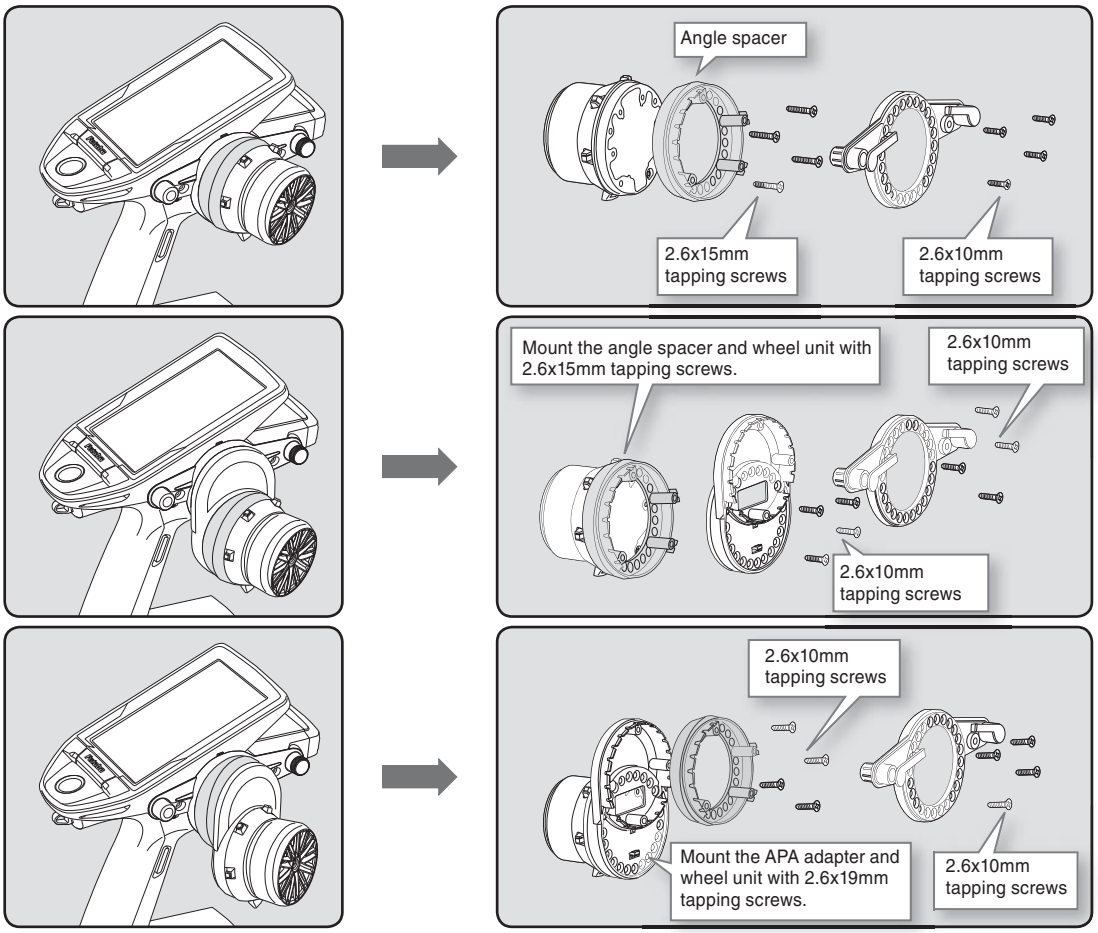

Non-telemetry LED (telemetry OFF sign)

When the telemetry function is inhibited by race regulations, a special LED lights when the telemetry function is OFF to confirm that the telemetry function is not operating.

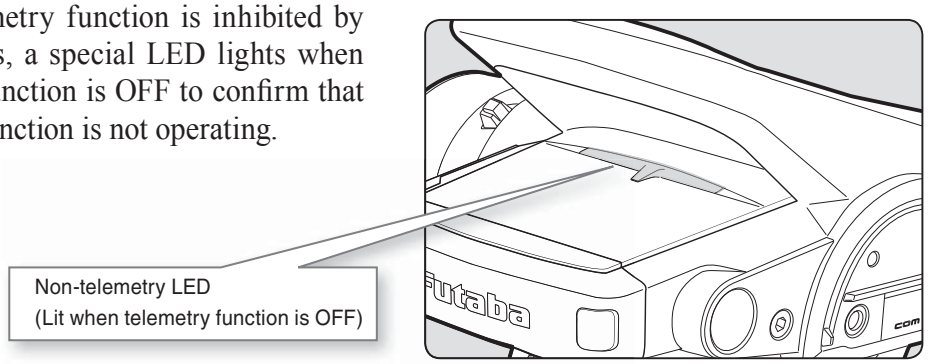

Handling the antenna and card slot and receiver

About The Transmitter Antenna

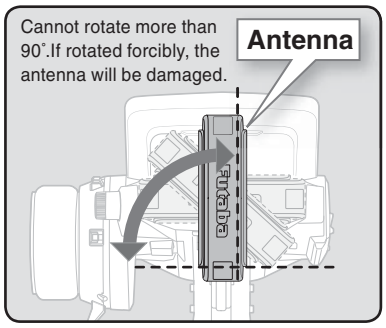

Antenna Moving Range

If the antenna is set to the 45˚ and 90˚ vertical position, the range of the radio waves may be greater than in the horizontal position. (Different depending on the conditions)

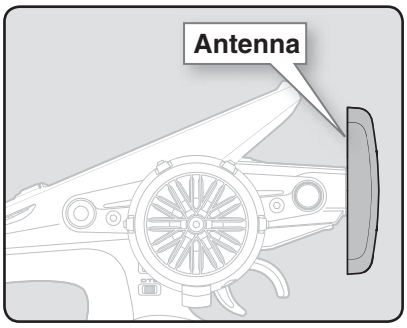

⚠Caution

⊘Please do not grasp the transmitter's antenna during drive.

Doing so may degrade the quality of the RF transmission to the model.

⊘The antenna position can be changed in the range as shown in figure. However, please do not apply unnecessary force or shock.

The internal cable may be damaged; thus transmitting distance decreases and it may cause malfunction.

There might be a small glitch when the antenna of the transmitter is brought close to servos, ESCs or other peripheral devices.
This is not an issue but please keep this symptom in mind, especially when setting-up.

Receiver Terminology

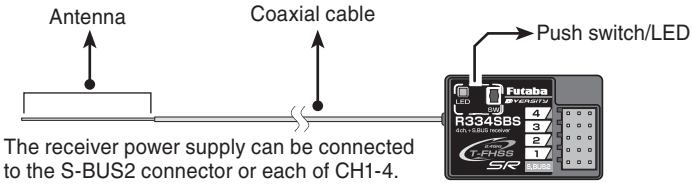

Connectors

4 :CH4 servo(CH4)
3 :CH3 servo(CH3)
2 :Throttle servo(CH2)
1 :Steering servo(CH1)
S.BUS2 :Power /S.BUS2 connector

Receiver Installation

Install the R334SBS receiver on the car as follows:

The operating range may become shorter, depending on where the receiver and the antenna are mounted.

⚠WARNING

⊘Do not cut or bundle the receiver antenna wire.
⊘Do not bend the coaxial cable. It causes damage.
❗Install the antenna in the higher place as shown in the figure.
❗Put the antenna in the antenna tube to protect it.
❗Keep the antenna as far away from the motor, ESC and other noise sources as you possibly can.
❗Wrap the receiver with something soft, such as foam rubber, to avoid vibration. If there is a chance of getting wet, put the receiver in a waterproof bag or balloon.
❗It is a receiver of diversity type of external antenna and case internal antenna. Do not place wiring or other objects on the plate. The receiving range may be affected.

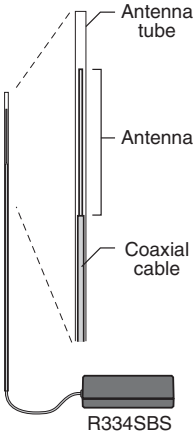

⚠Caution

❗Always use R334SBS under the following conditions:

Battery :Power requirement Rated voltage 3.8~7.4V (dry cell battery cannot be used)
Matched to the ratings of the receiver and connected servo.

- Transmitter's receiver system > T-FHSS SR-SR mode channel (ON):SR mode of Futaba SR compatible servo.
- Transmitter's receiver system > T-FHSS SR-SR mode channel (OFF):Normal mode of Futaba SR compatible servo. &Futaba digital servo.
- Transmitter's receiver system > T-FHSS/S-FHSS/FASST
  Transmitter's response type: Digital servo :Futaba digital servo
  Transmitter's response type: Analog servo :Futaba all servo (Normal mode of Futaba SR compatible servo.)

Under other conditions, the set will not operate, or the specified performance will not be displayed even if it operates. In addition, it may cause trouble with servos and other equipment. Futaba will not be responsible for damage, etc. caused by combination with the products of other companies.

Note: However, digital servos (including BLS Series brushless servo) can only be used in the "Digital servo type".

Handling an microSD card (commercial product)

T7PX model data and telemetry log data can be saved by using a commercial microSD card. When T7PX software updates are released, the microSD card can also be used to make the update.

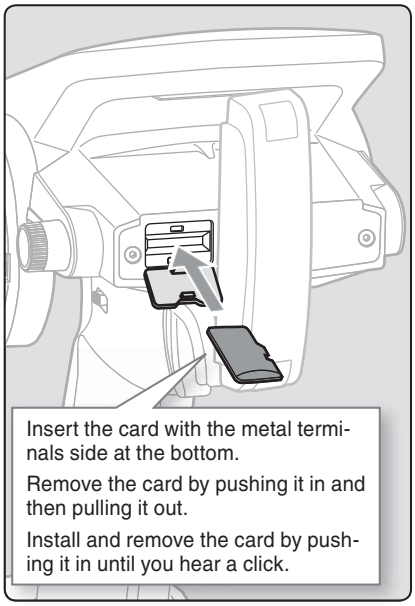

(Commercial product)

SD standard and SDHC standard microSD cards

(Some models may not be operated by card.)

*The data in the memory card cannot be guaranteed regardless of the contents and cause of trouble or damage. Always back-up the valuable data in the memory card.

⚠Caution

❗ Always insert and remove the microSD card in the state in which the transmitter power is off.

If the microSD card is removed while being accessed (read or write), the card itself and the data may be destroyed.

❗Do not install and remove the microSD card with the microSD card slot facing your face.

If you remove your fingers quickly, the microSD card may fly out and strike your face and is dangerous.

⊘Since the microSD card is a precision device, do not subject it to unreasonable force or shock.

-When a microSD card is installed in the T7PX transmitter, a folder called "Futaba" is created. Folders called "LOG" and "MODEL" are created in this folder. The "MODEL" folder stores the model data and the "LOG" folder stores the telemetry log data. When "Save screen" is set at the push switch by switch setting, an image of the screen to be displayed on the T7PX is saved by that switch. The saved image is stored in a folder call "PICTURE". A "PICTURE" folder is not created until "Save screen" is set.

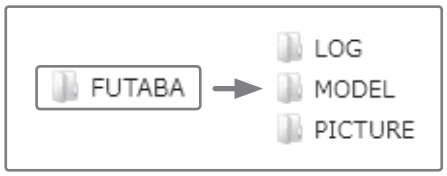

-The telemetry log data recorded on the microSD card can be converted to CSV format by the telemeter log converter released on our home page. When copying or moving a log file, always select both .FLI and .FLD file.

Receiver And Servo Connections

Connect the receiver and servos as shown below. Connect and install the receiver and servos in accordance with "Installation Safety Precautions" on the next page.

The figure shown below is an example. The method of connecting the motor controller to the motor and battery depends on the motor controller used. Purchase the motor controller and servos separately. The receiver also depends on the set.

When using the DSC cord with a gasoline engine car, connect the optional double extension cord to B/C of the receiver and the DSC cord and receiver switch to the opposite side connector.

Installation When An Electronic Speed Control Is Used

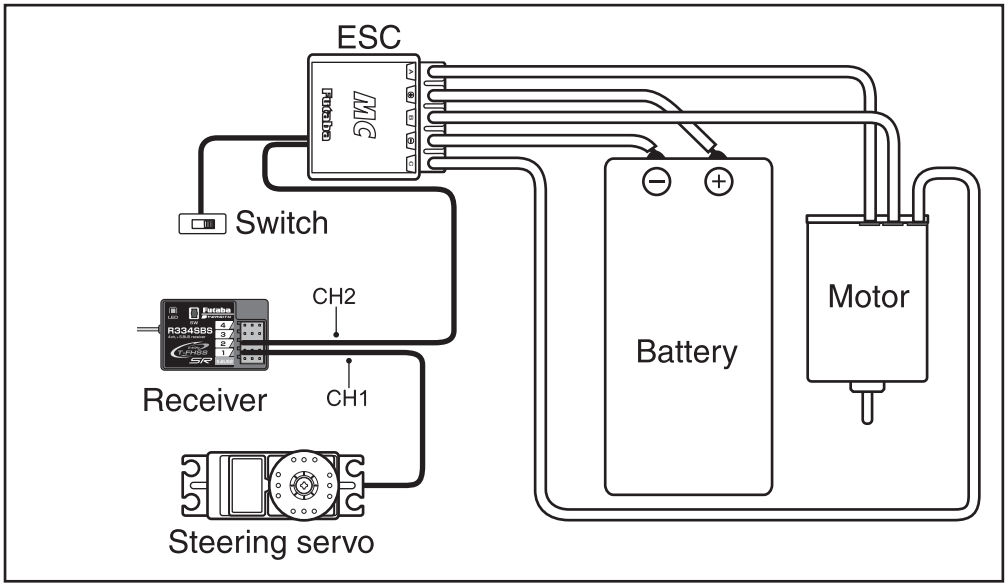

Installation For Gas Powered Models

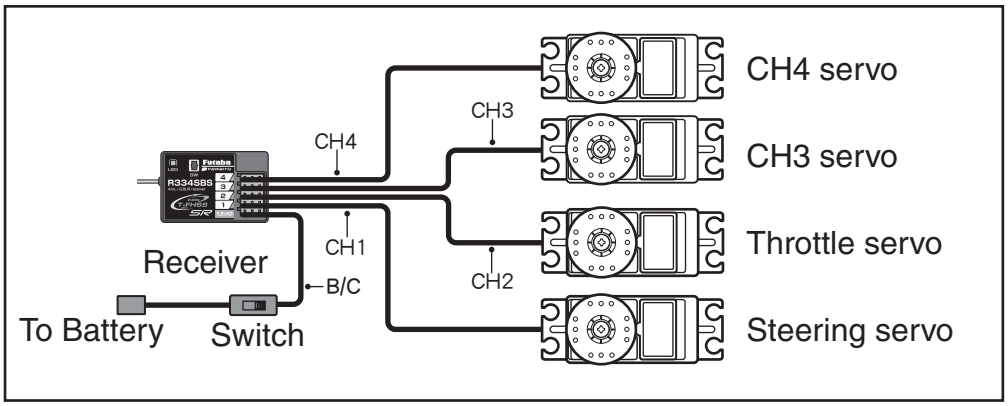

Installation Safety Precautions

⚠Warning

Receiver (receiver antenna)

⊘ Do not cut or bundle the receiver antenna wire.
⊘ Do not bundle the receiver antenna wire together with the motor controller lead wire.
⊘ Keep the receiver antenna wire at least 1cm away from motor, battery, and other wiring carrying heavy current.
⊘ Do not use a metal receiver antenna holder on a plate made of metal, carbon, or other conductive material.
❗ Install the receiver antenna holder as closely as possible to the receiver.

If the antenna wire is cut, bundled, or routed near a noise source, the receiving sensitivity will drop, the running (cruising) range will decrease, and you may lose control of the model.
*Noise is transmitted through metal, carbon, and other conductive material, so keep the receiver antenna wire away from such parts.

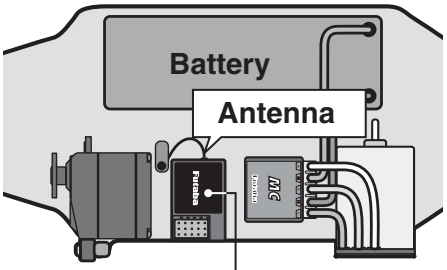

Install the receiver as far away as possible from the battery, motor controller, motor, silicon cord and other noise sources. Keep it away from the antenna wire, in particular.

Since the antenna of built-in antenna receivers is installed under this, do not place wiring or other objects on it.

Receiver Vibration-proofing / Waterproofing

(Car)
❗ Vibration-proof the receiver by wrapping it in foam rubber or other vibration-absorbing material and mount it with thick double-sided tape.
❗ When using the receiver holder supplied with the model kit, mount the holder to the chassis through a rubber grommet.
(Boat)
❗ Vibration-proof the receiver by wrapping it in foam rubber or other vibration-absorbing material. Also waterproof the receiver by cruising it in a plastic bag.

If the receiver is exposed to strong vibration and shock, it will operate erroneously due to the invasion of water drops and you may lose control of the model.

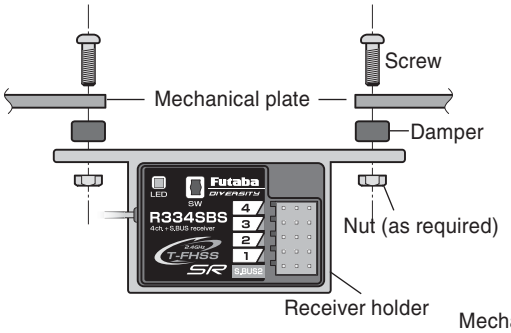

When using the receiver holder supplied with the kit, install the receiver through a rubber grommet.

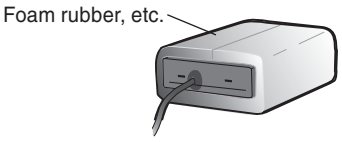

Wrap the receiver in foam rubber or other vibration-absorbing material. Do not use hard material. Hard material does not have a vibration-proofing effect.

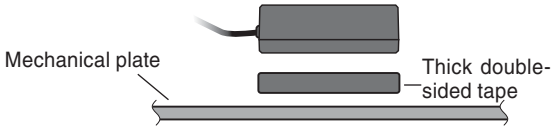

When mounting the receiver with double-sided tape, do not use a stiff tape. Stiff tape does not have a vibration-proofing effect.

⚠Warning

Connector Connections

❗ Be sure the receiver, servo, battery and connectors are fully and firmly connected.

If vibration from the model causes a connector to work loose while the model is in operation, you may lose control .

Servo Installation

❗ When you install the servos, always use the rubber grommets provided in servo hardware bags. Mount the servos so they do not directly come in contact with the mount.

If the servo case comes in direct contact with the mount, vibration will be directly transmitted to the servo.
If this condition continues for a long time, the servo may be damaged and control will be lost.

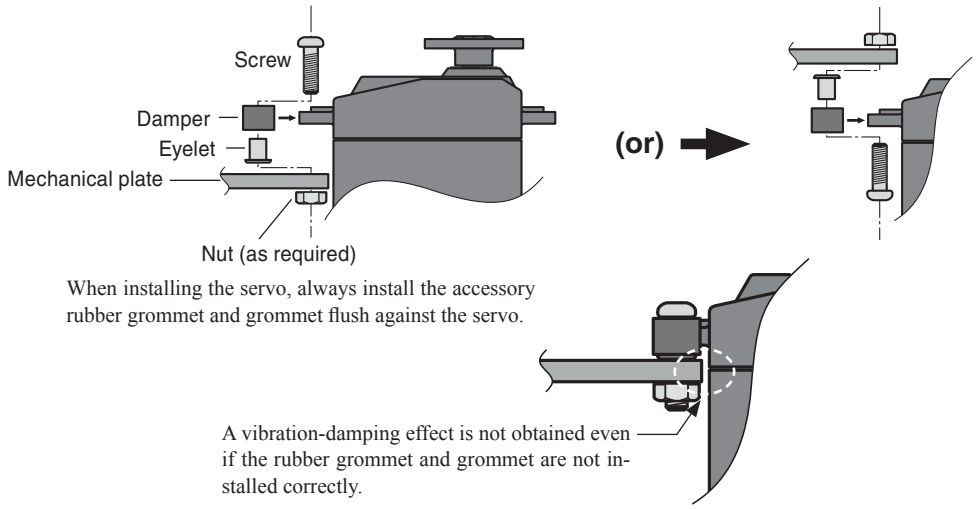

When installing the servo, always install the accessory rubber grommet and grommet flush against the servo.

A vibration-damping effect is not obtained even if the rubber grommet and grommet are not installed correctly.

Servo Throw

❗ Operate each servo over its full stroke and be sure the linkage does not bind or is loose.

The continuous application of unreasonable force to a servo may cause damage and excessive battery drain.

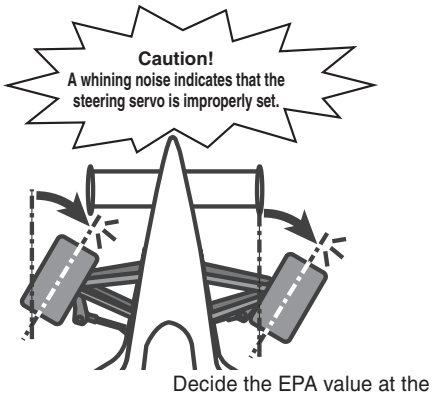

Decide the EPA value at the contact point.

Adjust the steering servo so that unreasonable force is not applied to the servo by the chassis at maximum servo travel.

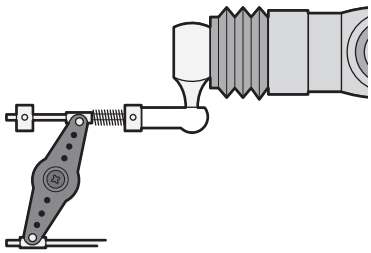

Adjust the throttle servo so that unreasonable force is not applied when the engine carburetor is fully open, fully closed, and the brakes are applied fully.
If the brakes overheat while running, their ability to function properly decreases. Before running, adjust the suitable maximum servo travel so that unreasonable force is not applied even when the servo travel is increased while running.

⚠Warning

Electronic Speed Cont

❗Install the heat sinks where they will not come in contact with aluminum, carbon fiber or other parts that conduct electricity.

If the FET Amp (Electronic speed control) heat sinks touch other materials that conduct electricity a short circuit could occur. This could result in loss of control and damage to the system.

Motor Noise Suppression

❗Always install capacitors to suppress noise when electric motors are used.

If capacitors are not properly installed you could experience erratic operation and reduced range as well as loss of control.

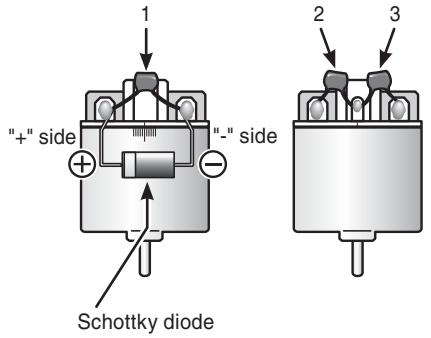

Motors with no suppressor capacitors, or inadequate suppression, may cause the receiver to malfunction. Always solder the capacitors supplied to your motor.
The Schottky diode improves the efficiency of the speed control / motor combination and provides extra protection to the brake FETs. The white ring must always face the positive side.

Other Noise Suppression Methods

❗Be sure there are no metal parts in your model which under vibration can come in contact with other metal parts.

Metal to metal contacts under vibration will emit a high frequency noise that will affect the receiver's performance. You could experience erratic operation and reduced range as well as loss of control.

Preparations (Transmitter)

(Display when power switch turned on)

When the power switch is turned on, the currently selected model number is displayed. Check if this number is the model number you want to set-up. To change the model number, use the Model Select function. (page 170)

Turn on the transmitter power.

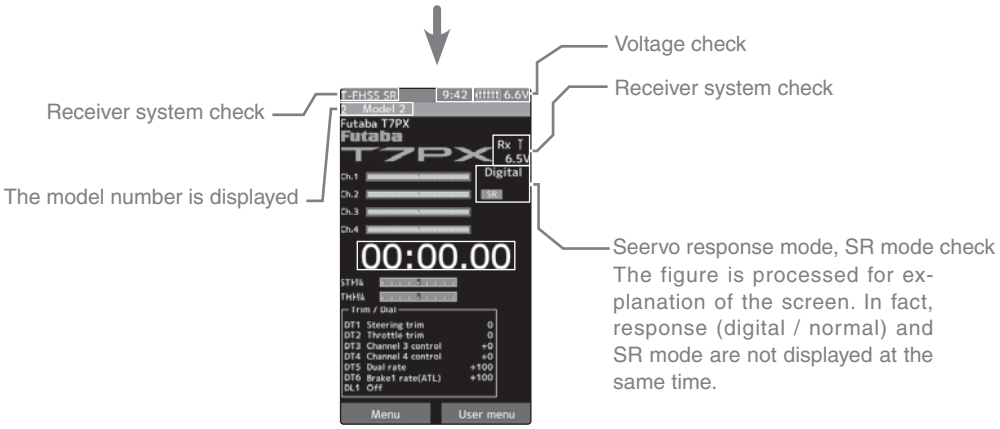

(HOME screen)

Before setting up each function of the transmitter, check and set the following items.

RF Output & Rx Type Check

Check if the receiver system is set to the type of receiver used.

*When the "PWR" side power switch is set to ON and radio waves are output normally, "T-FHSS" SR, "T-FHSS", "S-FHSS", or "FASST" is displayed. If not displayed, there is probably an abnormality or trouble so contact a Futaba Service Center.

When a screen is displayed at the "DSP" side, "Display" is displayed.

*Since the R334SBS receiver supplied with the T7PX set uses the T-FHSS SR (Super response) or telemetry function T-FHSS system, T7PX receiver setup must be set to T-FHSS SR or T-FHSS.

The R2104GF and other S-FHSS and FASST system receivers, as well as the R304SB T-FHSS system receiver can be used with the T7PX transmitter. However, only R614FS/FS/FF-E and R604FS/FS-E "C2" type receivers can be used with the FASST system.

The R603FS/FF "C1" type cannot be used.

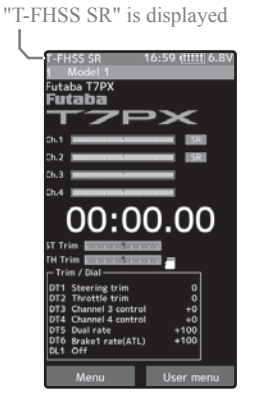

For "T-FHSS SR" system

Receiver system Change & How To Link

First set up the receiver. Setting changes are immediately reflected. Next, the transmitter and receiver are linked and the receiver memorizes the transmitter ID number so that signals from other transmitters will not be received.

In addition, with the T-FHSS telemetry system, the transmitter simultaneously memorizes the receiver ID numbers so that data from other receivers will not be received.

The method of setting up the receiver system and the method of linking the transmitter and receiver are described. Refer to the figure at the right for the edit buttons used.

1 Set the transmitter "PWR" side power switch to ON. From the Home screen, press the Home button or tapped [Menu] on the touch panel. Next, select [Receiver] at the Linkage menu and access the setup screen shown below by tapping the screen.

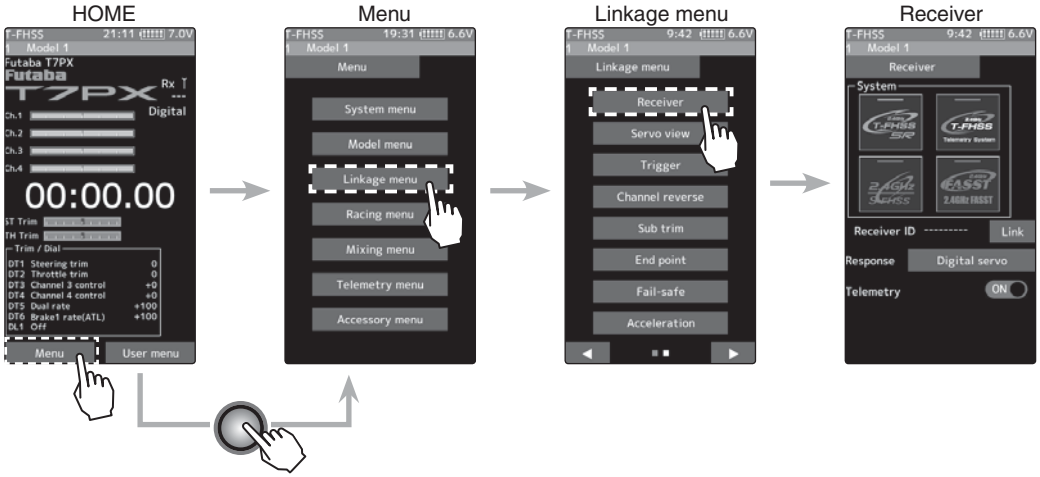

2 In "Receiver", select and tap the system to be set from T-FHSS SR, T-FHSS, S-FHSS, FASST. The confirmation screen will be displayed. To execute, tap [Yes] to hear an electronic sound and finish setting. To cancel, select [No] and touch it. If you change the system, be sure to link it with the receiver and turn the power on again.

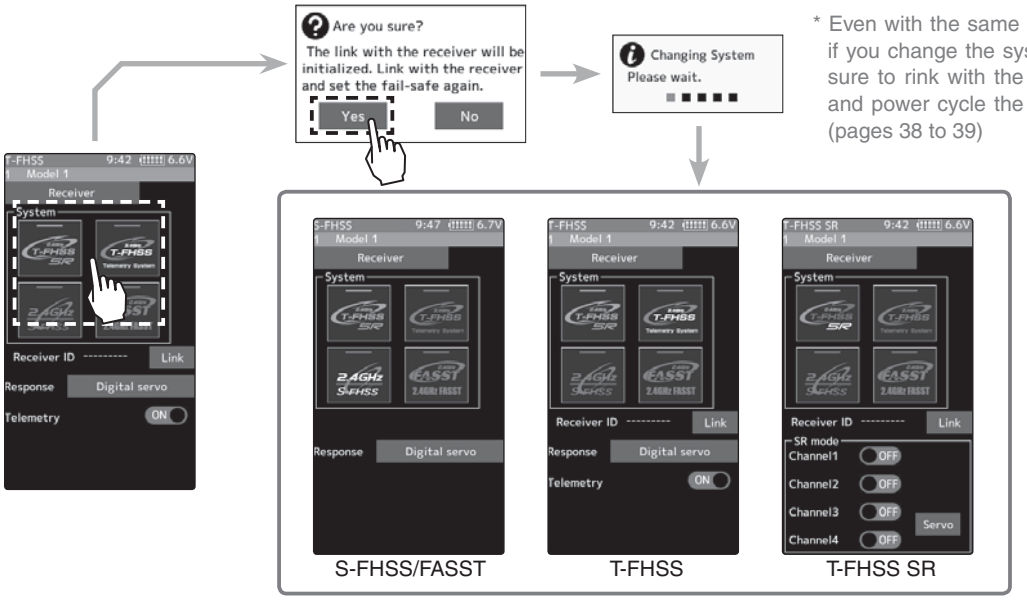

* Even with the same receiver, if you change the system, be sure to rink with the receiver and power cycle the receiver. (pages 38 to 39)

* After set up this far is complete, when using a FASST system (R614FS/FF/FF-E) or S-FHSS system (R2104GF, R204GF-E, etc.) receiver, go to "Receiver other than T-FHSS" on page 39. When using a telemetry function T-FHSS SR receiver (R334SBS) and T-FHSS receiver (R304SB, etc.) , go to step.

3 Bring the transmitter and receiver within 50cm of each other (antennas do not touch) and turn on the receiver power.

4 Touch [Link] on the transmitter T7PX screen, you will hear a chime sound and T7PX will enter the link mode for 20 seconds. During the 20 second link mode, push the receiver side push switch for about 2 seconds or more.

5 During the 20 seconds link mode, press the receiver tactile switch for at least 2 seconds. The LED blinks red and then changes to a greenish red → green steady light. When the T7PX makes a beeping sound and the message "Link with receiver" appears on the screen, release the receiver tactile switch. This ends reading of mutual ID and displays the memorized receiver ID number on the T7PX screen. Power cycle the receiver. If the "Receiver not found" error screen is displayed, linking failed. Check the set contents and repeat the linking operation.

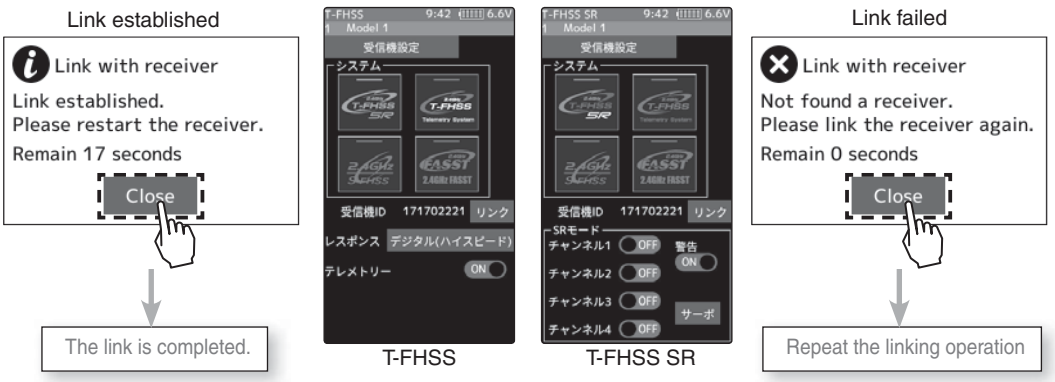

* The T7PX and T-FHSS SR receiver (R334SBS)/ T-FHSS receiver (R304SB, etc.) memorize the IDs linked last at each model memory. Since only one receiver ID is memorized at each model memory, multiple T-FHSS SR/ T-FHSS receivers cannot be used with the sa me model memory. When a receiver at the same model memory is changed, re-linking is necessary even if the receiver is already linked with the transmitter.

When using multiple T-FHSS SR/ T-FHSS receivers, link each receiver with each T7PX model memory.
However, one receiver can be linked with multiple model memories. The telemetry function communication status can be checked at the T7PX home screen.

Receivers Other Than T-FHSS

1 Bring the transmitter and the receiver close to each other, within 20 inches (half meter).

2 Turn on the power switch (PWR). On the display (DSP) side, you can not link.

3 Turn on the receiver.

4 Push the tactile switch of the receiver.
When the link is complete, the LED in the receiver changes to solid green. Actually check the operation of the servo.

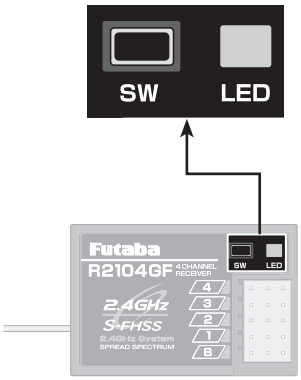

Precaution:
If there are many Futaba 2.4GHz systems turned on in close proximity to your receiver might not link to your transmitter. In this case, even if the receiver's LED stays solid green, unfortunately the receiver might have established a link to one of other transmitters. This is very dangerous if you do not notice this situation. In order to avoid the problem, we strongly recommend you to double-check whether your receiver is really under control by your transmitter by giving the stick input and then checking the servo response.

*Please refer to the table below for LED status vs receiver's condition.

LED status vs receiver's condition:

No signal reception	Red : On
Receiving signals	Green: On
Receiving signals, but ID is unmatched.	Green: Blink *1 (T-FHSS ,Red : On)
Unrecoverable failure (EEPROM,etc.)	LED: Red and Green turn on alternately

*1: LED could be change to red during intermittently during data processing.

⚠Warning

- After the linking is done, please cycle receiver power and check if the receiver to be linked is really under the control of your transmitter.
- Do not perform the linking procedure with motor's main wire connected or the engine operating as it may result in serious injury.

Response Mode/ SR Check

Make sure that the response mode or SR mode setting matches the servo or other equipment to be used.

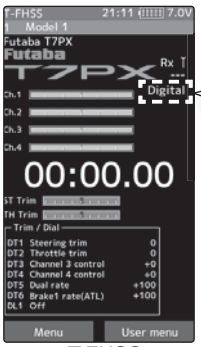

T-FHSS

Response mode is displayed.
"Digital servo"
"Analog servo"

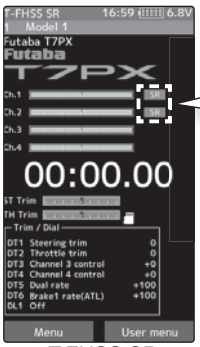

T-FHSS SR

Display ON / OFF of SR mode.
In the case of the channel indicated as [SR], SR mode is ON. If it is not displayed, SR mode is OFF.
For SR mode, ON / OFF can be set for each channel.

If the setting is incorrect, change it by the following method.

How to set the response / SR mode

1 From the Home screen, press the Home button or tapped [Menu] on the touch panel. Next, select [Receiver] at the Linkage menu and access the setup screen shown below by tapping the screen.

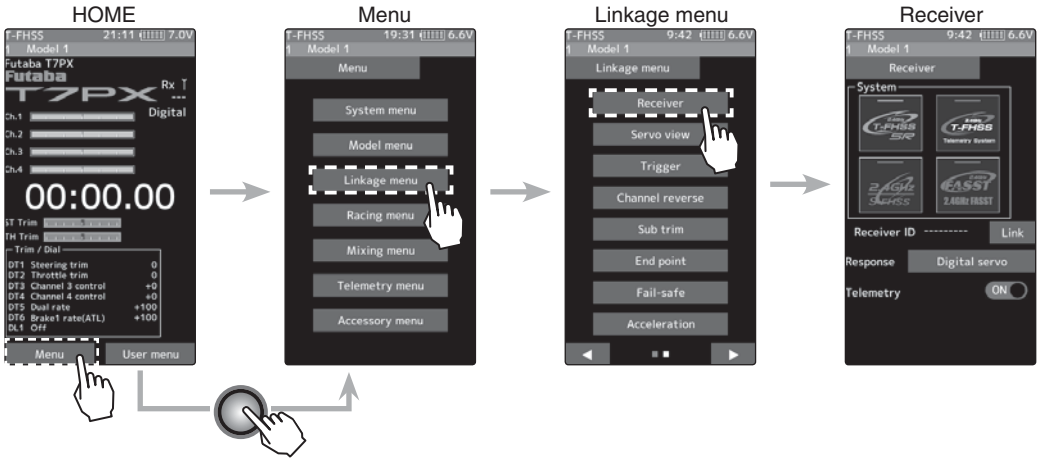

2 For the T-FHSS / S-FHSS / FASST system, touch [Digital Servo] or [Analog Servo] in the receiver setting and make changes. The display changes when mode is changed.
When the power of the receiver is turned on, be sure to turn the power off and then on again.

Receiver

From an analog servo to a digital servo → Changes to a digital servo

From a digital servo to an analog servo → Changes to an analog servo

In the case of T-FHSS SR, "SR mode" which has greatly improved response compared to the conventional T-FHSS can be used. Tap and change (ON)/ (OFF) of each channel of SR mode. The display changes when you change it. Be sure to turn off the power of the receiver before operation check.
In SR mode, ON/ OFF can be set for each channel. When using normal servo or ESC, set the SR mode of the connected channel to (OFF).

Note: In SR mode ON, normal servo and ESC will not operate. Please set our S.BUS servo corresponding to SR mode to SR mode on S.BUS servo menu on page 135 and use it. Also, in case of SR mode OFF, the servo set to SR mode can not be used, so set the servo to normal mode by S. BUS servo menu. If using wrong combination, servo and other equipment will fail, so please be careful.

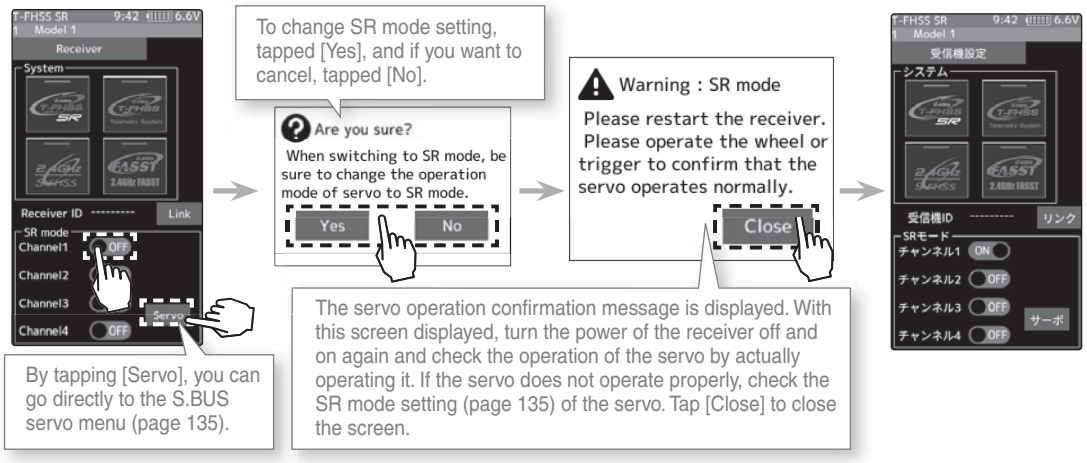

Servo conforming to the setting of response / SR mode

System	Response / SR node	Usable servos
T-FHSS SR	SR mode channel: ON	-SR mode of Futaba SR compatible servo.
	SR mode channel: OFF	- Normal mode of Futaba SR compatible servo. - Futaba digital servo.
T-FHSS	Digital servo	- Normal mode of Futaba SR compatible servo. - Futaba digital servo.
	Analog servo	- Futaba all servo. (Normal mode of Futaba SR compatible servo.)
S-FHSS	Digital servo	- Normal mode of Futaba SR compatible servo. - Futaba digital servo.
	Analog servo	- Futaba all servo. (Normal mode of Futaba SR compatible servo.)
FASST	Digital servo	- Normal mode of Futaba SR compatible servo. - Futaba digital servo.
	Analog servo	- Futaba all servo. (Normal mode of Futaba SR compatible servo.)

Be sure to use the T7PX receiver setting and the servo to be used under predetermined conditions.
Under other conditions, the set will not operate, or the specified performance will not be displayed even if it operates. In addition, it may cause servo trouble. Futaba will not be responsible for damage, etc. caused by combination with the products of other companies.