Verifone®

M425

Installation Guide

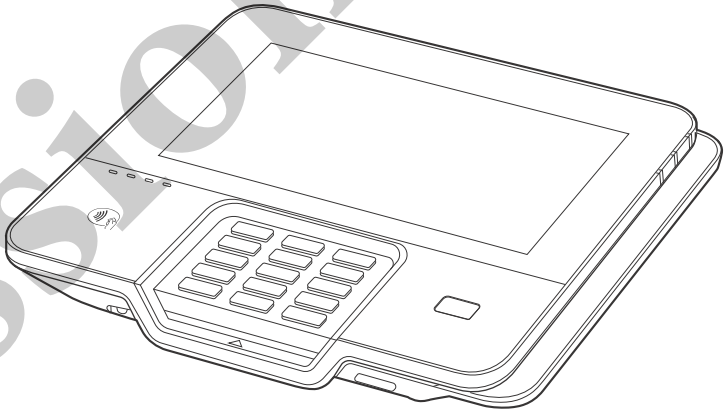

Submission only

Verifone Part Number DOC391-003-EN-A, Revision A.3

M425 Installation Guide

© 2023 Verifone, Inc.

All rights reserved. No part of the contents of this document may be reproduced or transmitted in any form without the written permission of Verifone, Inc.

The information contained in this document is subject to change without notice. Although Verifone has attempted to ensure the accuracy of the contents of this document, this document may include errors or omissions. The examples and sample programs are for illustration only and may not be suited for your purpose. You should verify the applicability of any example or sample program before placing the software into productive use. This document, including without limitation the examples and software programs, is supplied "As-Is."

Verifone, and the Verifone logo are registered trademarks of Verifone.
Other brand names or trademarks associated with Verifone's products and services are trademarks of Verifone, Inc. All other brand names and trademarks appearing in this manual are the property of their respective holders.

Product Warranty

For product warranty information, go to *http://www.verifone.com/terms*.

Comments? Please e-mail all comments in this document to your local Verifone Support Team.

Submission only

Verifone, Inc.
1-800-Verifone

www.verifone.com

Verifone Part Number DOC391-003-EN-A, Revision A.3

CONTENTS

PREFACE 5

Audience. 5
Organization 5
Related Documentation 5
Conventions and Acronyms 5
Document Conventions 6
Acronym Definitions 7

CHAPTER 1
Device Overview

Features and Benefits 11
Ease of Use 11
Performance and Durability 11
Security 11
Contactless Capability 11
Communication Technology 11
Connectivity 11

CHAPTER 2
Setup

Device Location 12
Environmental Factors 12
Electrical Considerations 12
PIN Protection Measures 13
Inside the Shipping Carton 13
Device Features 15
Front Panel 15
Connection Ports 16
Connecting Cables and other Devices 16
MSAM Card 22
Micro SD (TF) Card 23
Powering the Device. 24
Smart Card Reader 26
Magnetic Card Reader 27
Contactless Smart Card Transaction 27
M425 Wi-Fi/BT Support 28
Bluetooth Support 28
Wireless Transaction 28
Optional Accessories 28
Privacy Shield 28
Stand. 29
External and Optional Devices 32

CHAPTER 3
Specifications

Power Rating 33
Power Pack 33
Temperature 33
Memory. 33

Submission only

Display 33
Magnetic Card Reader 33
Primary Smart Card 33
MSAM Card Reader 33
uSD Card Reader 33
Integrated Contactless Reader 33
Keypad 33
Power button 34
Audio Interface 34
Peripheral Ports 34
Security 34

CHAPTER 4
Maintenance and Cleaning
General Care 35
Additional Safety Information 36
Surface Cleaning 36
Smart Card Reader Cleaning 36
Magnetic Stripe Cleaning 37

CHAPTER 5
Verifone Service and Support
Service Returns 38
Accessories and Documentation 39
Accessories 39

CHAPTER 6
Troubleshooting Guidelines
Device Does Not Start 41
Device Display Does Not Show Correct/Readable Info 41
Blank Display 42
Keypad Does Not Respond 42
Transactions Fail to Process 42

Submission only

PREFACE

This guide is the primary source of information for setting up and installing the Verifone M425 device.

Audience

This guide is useful to anyone installing and configuring the M425 device.

Organization

This guide is organized as follows:

Chapter 1, Device Overview. Provides an overview of the device.

Chapter 2, Setup. Explains setup and installation of the device, selecting a location, and establishing connections with other devices.

Chapter 3, Specifications. Lists the power requirements, dimensions, and other specifications of the device.

Chapter 4, Maintenance and Cleaning. Explains maintenance of the device.

Chapter 5, Verifone Service and Support. Provides information on contacting your Verifone service provider and information on how to order accessories or documentations from Verifone.

Chapter 6, Troubleshooting Guidelines. Provides troubleshooting guidelines should you encounter a problem with unit installation.

Related Documentation

Refer to the following set of documents for more details.

M425 Certifications and Regulations	*VPN DOC391-001-EN*
M425 Quick Installation Guide	*VPN DOC391-002-EN*

Conventions and Acronyms

This section describes the conventions and acronyms used in this guide.

Submission only

Document Conventions

Various conventions are used to help you quickly identify special formatting. Table 1 describes these conventions and provides examples of their use.

Table 1 Document Conventions

Convention	Meaning	Example
Blue	Text in blue indicates terms that are cross referenced.	See Conventions and Acronyms.
Italics	Italic typeface indicates book titles or emphasis.	You *must* not use this unit underwater.
NOTE	The pencil icon is used to highlight important information.	RS232-type devices do not work on the M425 communication port.
CAUTION	The caution symbol indicates hardware or software failure, or loss of data.	The unit is intended for indoor use only. Do not use the device outdoors.
WARNING	The lightning symbol is used as a warning when bodily injury might occur.	Do not use the device near water due to risk of shock.

Submission only

Acronym Definitions

Acronyms are used in place of the full definition. Table 2 presents acronyms and their definitions.

Table 2 Acronym Definitions

Acronym	Definitions
AES	Advanced Encryption Standard Algorithm
ARM	Advanced RISC Machine
CTLS	Contactless Reader
DUKPT	Derived Unique Key Per Transaction Method as defined in the VISA's POS Equipment Requirement: PIN processing and Data Authentication, International Version 1.0, August 1988
ECR	Electronic Cash Register
EMV	Europay, MasterCard and Visa Standard
MSAM	Multiple Secure Access Module
MSR	Magnetic Swipe Reader
NFC	Near Field Communication
PIN	Personal Identification Number
POS	Point-of-Sale
QR Code	Quick Response Code
SAM	Secure Access Module
SCR	Smart Card Reader
SRED	Secure Reading and Exchange of Data
TF	TransFlash
PED	PIN Entry Device
USB	Universal Serial Bus
Wi-Fi	Wireless Fidelity

Submission only

Device Overview

The Verifone M425 is a new Multi-Lane, media-capable and consumer-facing device. M425 device's enriching features allow electronic payment transactions to be processed in multi-lane scenarios with combined card payment with a variety of Verifone cloud-based services including Advanced Payment Methods, e-comm capabilities such as Buy Online Pick-Up in Store, and the ability to dynamically configure multi-media driven promotional content at the counter.

This payment processing device can scan barcodes, QR codes, and products with the help of an integrated camera. In combination with Verifone Connect digital services, it offers the ability to run Android applications, like loyalty and inventory. It also enables clients to remotely monitor and update their devices using Verifone's estate management solution.

The best-in-class M425 device will be able to communicate to the ECR via serial over USB and IP over USB simultaneously and support multiple SAM cards for transaction processing. Verbal Message Supporter is a new significant feature where the user will be able to speak into the terminal microphone to state their issue or raise a question that will be received by the Verifone Support Administrator. It also supports video playback from a serial digital memory interface to play training videos for staff and promotional content to customers at or near the checkout counter or in the lane. It transforms the customer's journey into a simple walk-through by providing different connection options like an external power supply, USB, and Ethernet.

Submission only

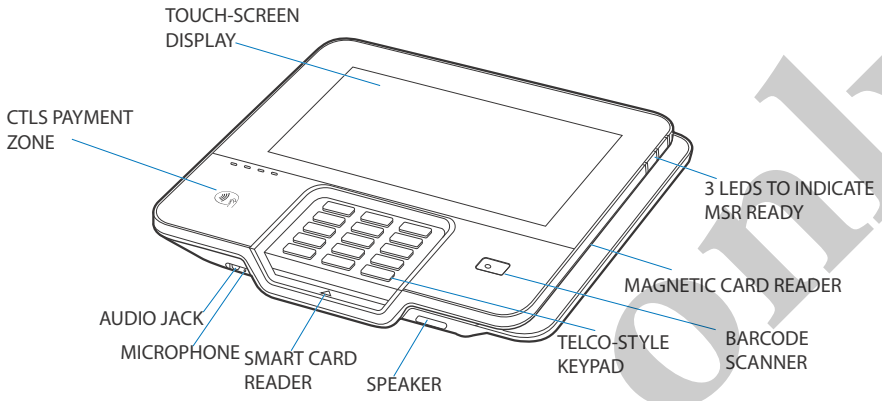

Figure 1 M425 Device

Submission only

Key Features and Benefits

	M425 Features
Processor	• Quad-core ARM Cortex-A53 64-bit CPU @ 1.3 GHz • Dedicated secure processor
Memory	• 2 GB LPDDR3 + 16 GB eMMC • Secure processor: 8Mb SPI Flash
Display	• 5.5-inch (120.77 X 67.93) HD IPS LCD, Capacitive Touch screen
Keypad (touch)	• Dedicated mechanical keypad and on-screen (touch) keypad.
Payment	• Magnetic Swipe Reader (MSR) • Smart Card Reader (SCR) • Contactless Reader (CTLS) • Near Field Communication (NFC) • Quick Response (QR) code
Communication	• Bluetooth 4.2 BLE • 2.4 GHz + 5GHz Wi-Fi, 802.11 a, b, g, n, ac
Peripheral Ports	• Custom Multiport Interface
Camera	• 5 MP (front QR/Barcode Scanner) • Auto-focus • Fast scanner
Security	• PCI PTS 6.X • SRED • Supports AES DUKPT
SAM	• 3 Standard SAM
uSD	• SD 3.0, supports 4-bit SD mode
Environmental	• Operating temperature: -10° to 50°C (14° to 122°F) • Storage temperature: -20° to 60°C (-4° to 140°F) • Relative humidity: 5% to 90% non-condensing

Submission only

Features and Benefits

Following are the features and benefits of the M425 device.

Ease of Use

- 5.5” LCD for unlimited application possibilities and easy readability under various lighting conditions.
- Touchscreen for icon-based applications or electronic signature capture support.
- Intuitive telco-style keypad with colored control keys.
- Bi-directional magnetic stripe card reader with an extended blade for optimal card reading.
- Audio jack to facilitate accessibility for the visually impaired.

Performance and Durability

- Fast transactions due to powerful Quad-core ARM Cortex-A53 64-bit CPU @ 1.3 GHz.
- 16 GB of eMMC and 2 GB LPDDR3.
- Rounded corners and drop resistant to less than 75cm on a concrete floor to minimize breakage.
- IP53 rating when terminal is mouted on Stands.

Security

- Supports tamper-sensing circuitry to detect unauthorized intrusion and a broad spectrum of software-based security features.
- PCI-PTS 6.X for debit and other PIN-based transactions.
- EMV Level 1 Type.
- Supports reliable security features including TLS, VeriShield file authentication, and VeriShield Protect to help prevent fraud and other intrusions.

Contactless Capability

- Advanced contactless architecture that future-proofs investment with a single contactless interface (SingleCI), SoftSAMs, and side-by-side application architecture.
- Dedicated tap zone for optimized user experience.
- Accepts EMV, NFC, QR Code, and mag-stripe contactless payments as well as PIN-based transactions.

Communication Technology

- Bluetooth: Simple, plug-and-play for locations that need short-range wireless capability. Eddystone and iBeacon profiles are also supported.
- Wi-Fi: supports multiple wireless devices and supports an existing IP infrastructure.

Connectivity

- USB-C Port

Submission only

Setup

This chapter describes the setup procedure for the M425 in the following sections:

- Device Location
- PIN Protection Measures
- Inside the Shipping Carton
- Device Features
- Connection Ports
- MSAM Card
- Micro SD (TF) Card
- Powering the Device
- Smart Card Reader
- Magnetic Card Reader
- Contactless Smart Card Transaction
- M425 Wi-Fi/BT Support
- Optional Accessories

Device Location

The following are guidelines used to select an ideal location for the device.

- Select a location convenient for both the merchant and cardholder.
- Select a location near a power outlet, POS, ECR, or computer connected to the device. For safety, do not string cables or cords across a walkway.

Environmental Factors

- Do not use the device where there is excess heat, dust, humidity, moisture, caustic chemicals or oils.
- Keep the device away from direct sunlight and anything that radiates heat, such as a stove or a motor.
- Do not use the device outdoors.

Electrical Considerations

- Avoid using this product during electrical storms.
- Avoid locations near electrical appliances or other devices that cause excessive voltage fluctuations or emit electrical noise (for example, air conditioners, electric motors, neon signs, high-frequency, or magnetic security devices, or computer equipment).
- Avoid using the device near water or in moist conditions.

Submission only

- Disconnect the device from its POS device before cleaning.

WARNING Do not use the device near water, including a bathtub, washbowl, kitchen sink or laundry tub, in a wet basement, or near a swimming pool to avoid shock or damage.

N'utilisez pas l'appareil près de l'eau, y compris une baignoire, un lavabo, un évier de cuisine ou une cuve à lessive, dans un sous-sol humide ou près d'une piscine pour éviter les chocs ou les dommages.

PIN Protection Measures

Use the following techniques to provide effective screening of the PIN-entry keypad during the PIN-entry process. You can use these methods in combination, although in some cases a single method might suffice.

- Position the device in such a way as to block visual observation of the PIN-entry process so that it is angled in such a way that PIN spying is difficult.
- Install the PED on an adjustable stand that allows consumers to swivel the device sideways and/or tilt it forward/backward to a position that makes visual observation of the PIN-entry process difficult.
- Position in-store security cameras so that the PIN-entry keypad is not visible.
- This risk of shoulder-spying during PIN entry can be significantly reduced by installing the optional approved privacy shield.
- Verifone also recommends instructing the cardholder regarding safe PIN-entry or using the Privacy Shield for secure PIN entry by installing a Privacy Shield (optional).

Inside the Shipping Carton

Open the shipping carton and carefully inspect its contents for possible tampering or shipping damage. The device is a secure product. Tampering causes it to cease to function or to operate in an unsecured manner.

Unpacking the Shipping Carton

To unpack the shipping carton:

1. Carefully inspect the shipping carton and its contents for possible tampering or damage.
2. Validate the authenticity of the sender by verifying the shipping tracking number and other information located on the product order paperwork.
3. Remove and inspect the contents of the shipping carton. The device ships in multiple configurations, the carton may include all or any of the following:
   - Device
   - Screw

Submission only

- Additional accessories

NOTE

Power supply and connectivity cables are part of additional accessories that can be ordered separately.

Refer to Accessories section for part numbers and Accessories and Documentation section for ordering the required accessories.

4. Remove all plastic wrapping from the device and components.
5. Remove the clear protective film from the display.
6. Inspect the terminal for possible tampering; see how to identify signs of tampering in the section Periodic Inspection.
7. Save the shipping carton and packing material for future repacking or moving of the device.

WARNING

Do not use a tampered or damaged unit. The device comes equipped with tamper-evident labels. If a label or component appears damaged, please notify the shipping company and your Verifone service provider immediately.

Periodic Inspection

Periodically inspect the terminal for possible tampering. Signs of tampering include:

- Overlays in the PIN pad area.
- Wires protruding out of the device.
- Foreign objects inserted into the smart card slot or magnetic stripe slot.
- Any bumps in the casing below the mag stripe slot and any noticeable additional mag stripe head from the side.
- Signs of damage to the tamper-evident labels.
- A Tamper Warning message on the device display.

If any device is found to have been tampered with, please remove it from service immediately, keep it available for a potential forensics' investigation, and notify your company security officer and your local Verifone representative or service provider. To contact Verifone, please see Verifone Service and Support.

For terminals equipped with a privacy shield, perform daily inspections to ensure that the privacy shield is installed and has not been removed.

Submission only

Device Features

Familiarize yourself with the device features before continuing with the installation process:

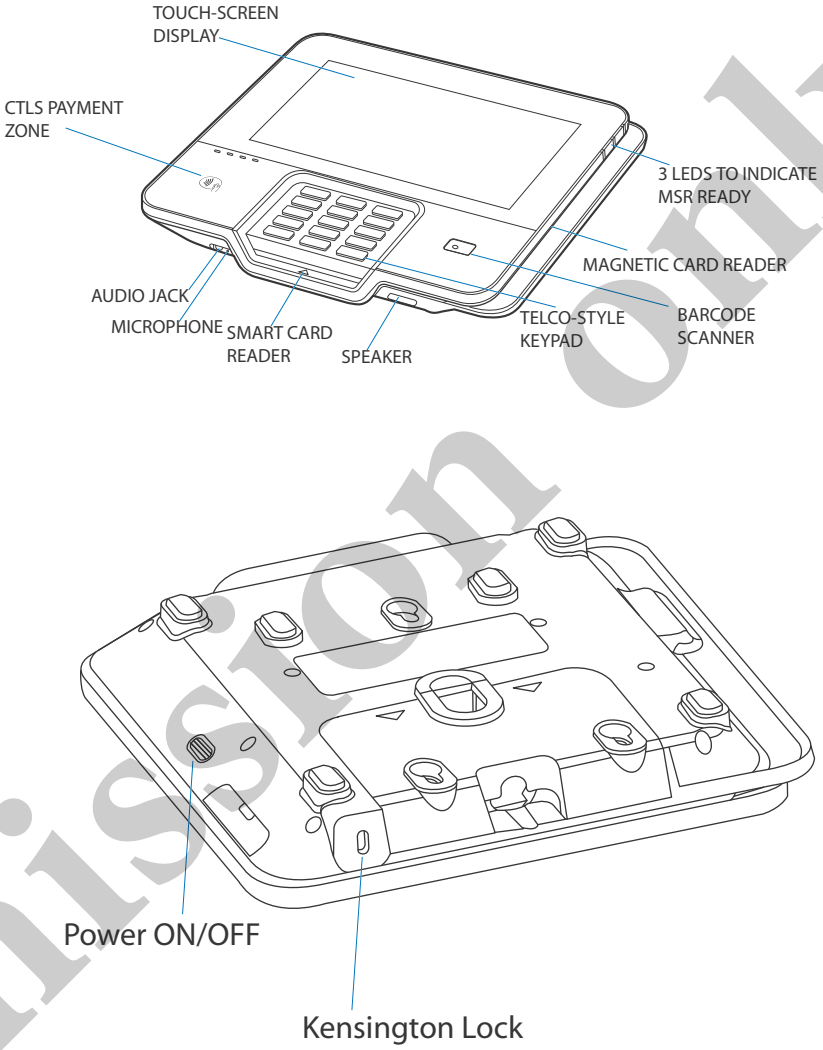

Figure 2 M425 Features

Front Panel

The front panel offers the following features:

- **Touch Screen Display** - The Verifone M425 device has a colored touch screen Display.
- **Smart Card Reader** - A smart card reader is built into the front of the device to process smart card-based debit or credit transactions. For directions on how to use a smart card, see Using the Smart Card Reader.
- **Magnetic Card Reader** - A magnetic card reader is built into the device for performing debit or credit card transactions. The card can be swiped in either direction. To ensure a proper read of the magnetic swipe card, insert the magnetic card from the side of the device as shown in Figure 11.

Submission only

- **CTLS Reader** - Contactless (CTLS) Reader has dedicated LEDs lower to the left of the display for contactless payments. For directions on how to conduct contactless transactions, see Performing a Contactless Smart Card Transaction.
  - 4 white LEDs to support CTLS transaction function.
  - 3 white LEDs to support MSR transaction function.
  - 1 white LED to support SCR transaction function.
- **Audio Jack** - A 3.5 mm audio jack to facilitate accessibility for the visually impaired.
- **Microphone** - the user can speak into the terminal microphone to state the issue or ask a question.
- **Barcode Scanner** - A barcode scanner to capture and read information contained in a barcode.
- **K-Lock Slot** - customer can buy any kind of K-lock in the market to use on M425 device for physical security.
- **Telco Style Keypad** - intuitive telco-style keypad with colored control keys, interchangeably detects key presses from tactile keypad and touchscreen.

NOTE

On screen PIN entry is NOT supported.

Connection Ports

The device has one custom multiport interface for power and communication.

Connecting Cables and other Devices

M425 device supports both **integrated kit** and **Dongle with orange cable** connectivity.

To connect M425 device to and integrated kit:

1 Remove the back cover as shown below.

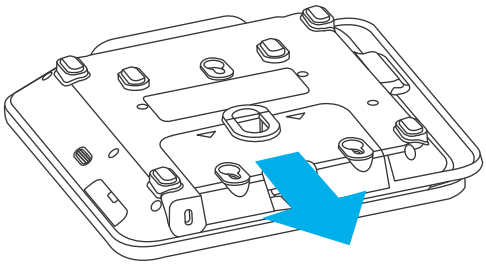

Figure 3 Removing Back Cover

NOTE

Route the multiport cable through the back cover first, as shown in the picture.

Submission only

2 Connect the multiport cable at the back of the device, Figure 4 (B).

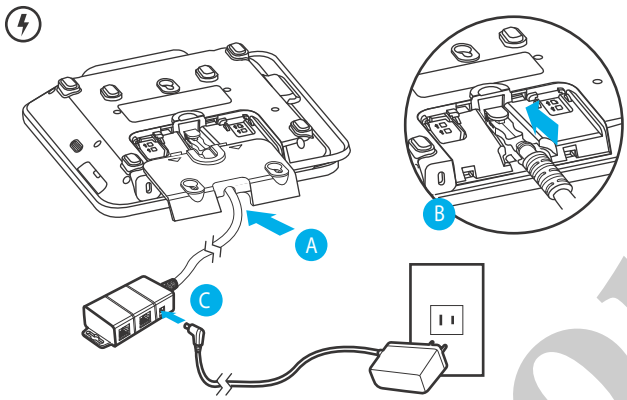

Figure 4 Multiport Cable Connected on the Rear of the Unit

Powered Multiport Cable supports USB and power connectivity. It provides a convenient way to connect to other systems of the same type.

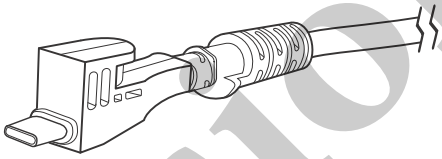

Figure 5 Powered Multiport Cable

Integrated Kits

Connect the integrated kits as per the required configuration.

Following are the supported integrated kits for M425 connectivity.

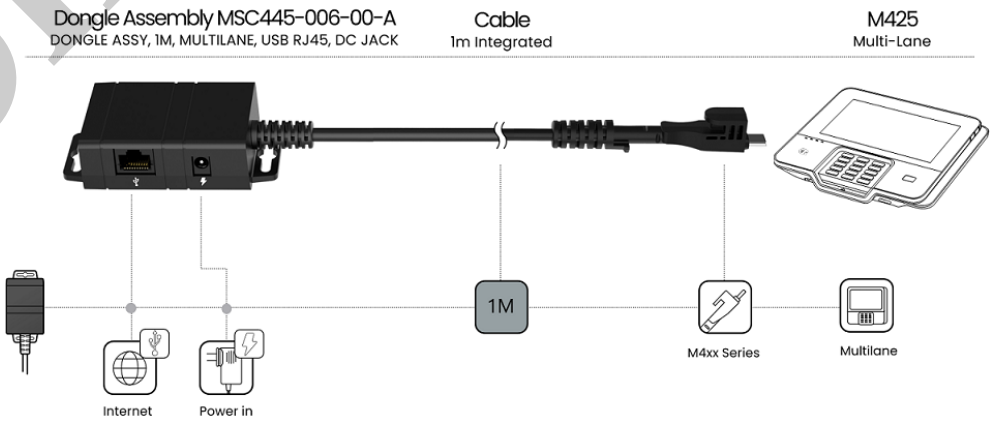

Submission only

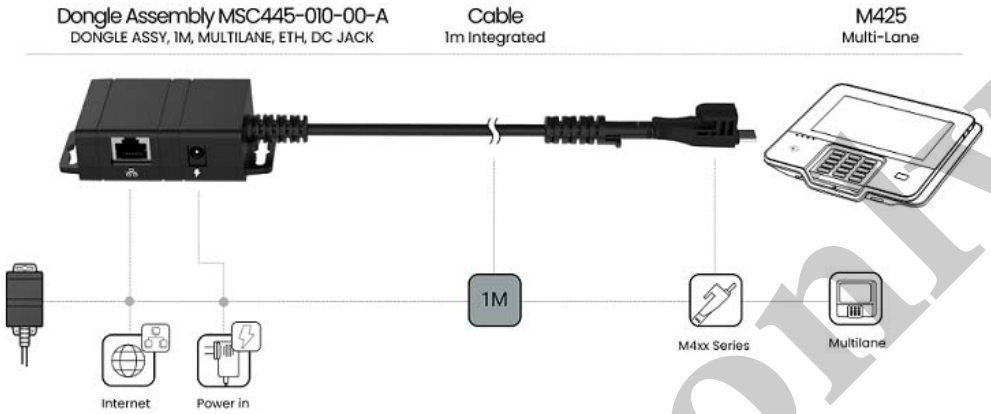

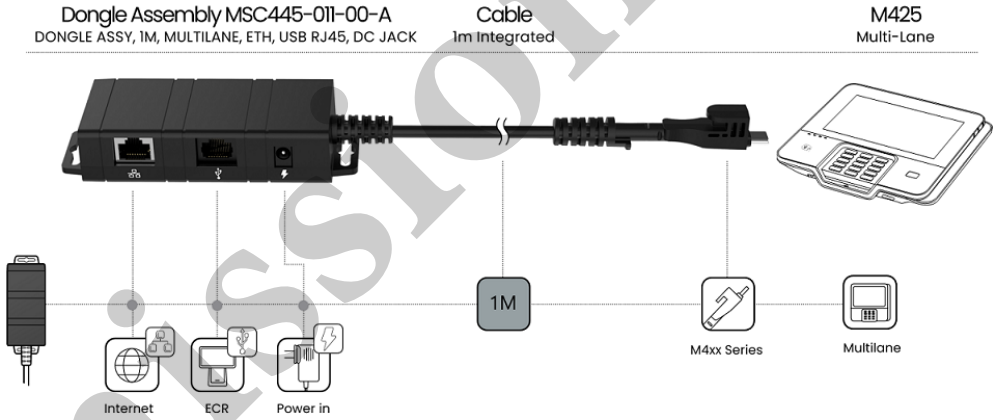

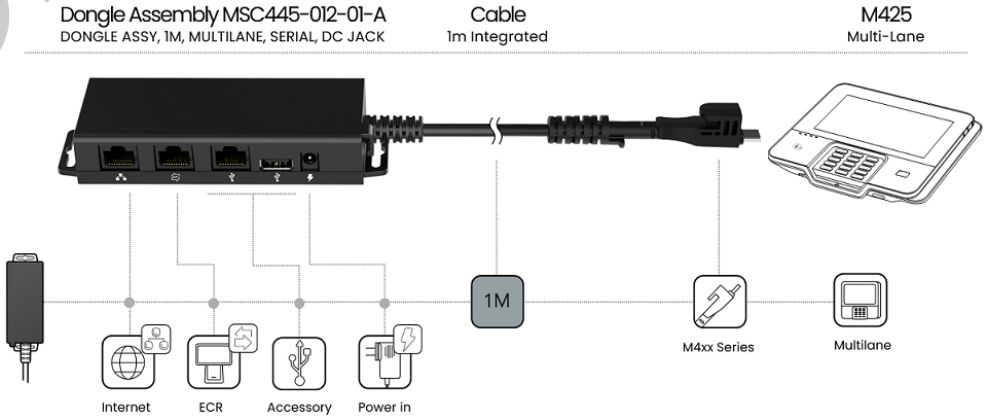

Submission only

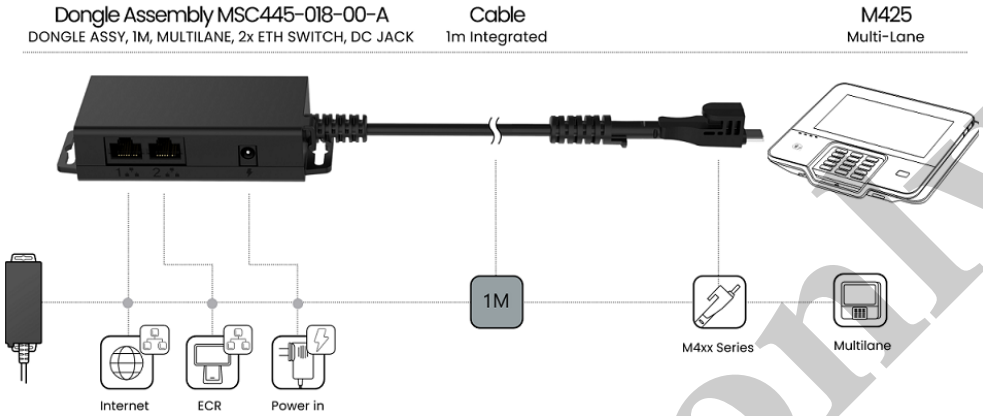

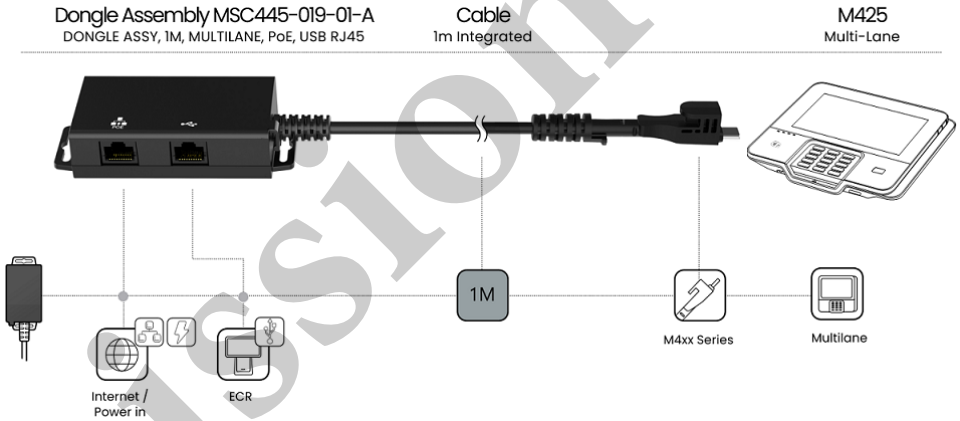

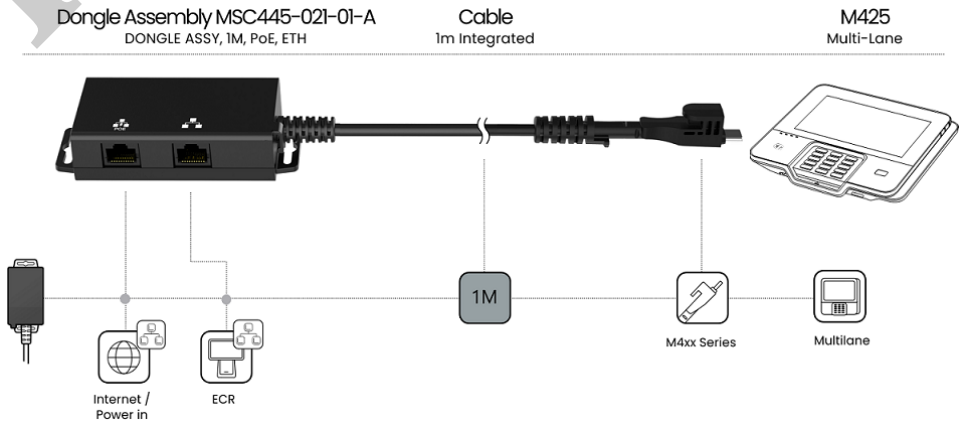

Submission only

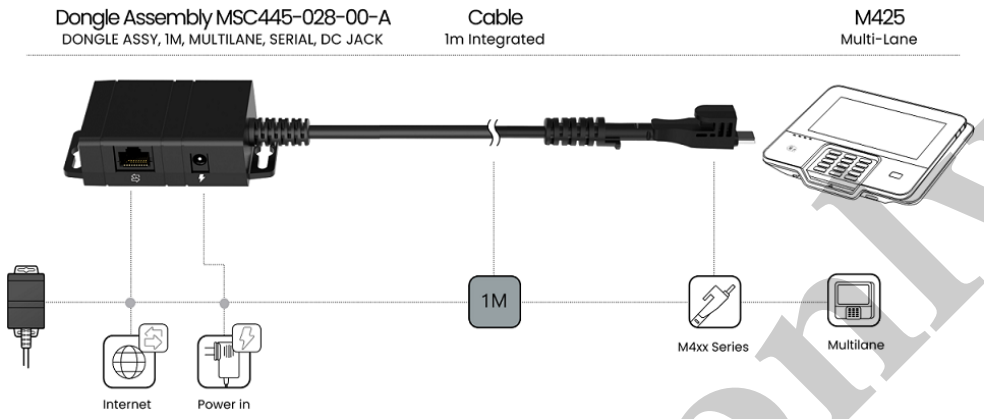

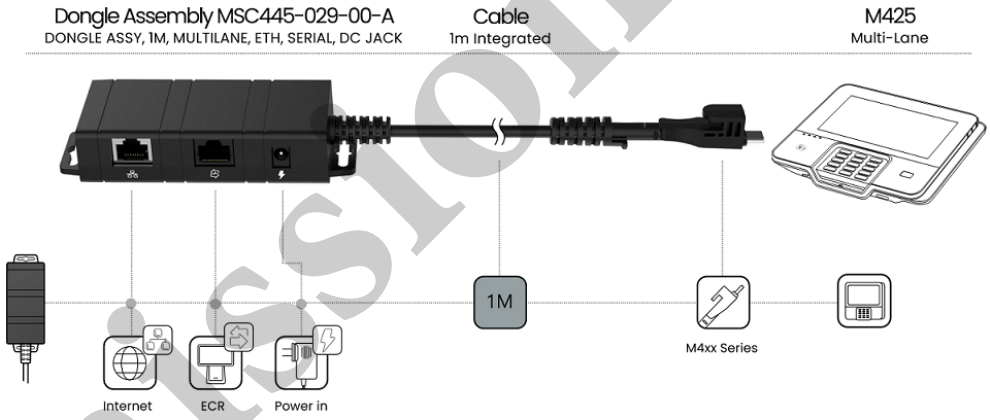

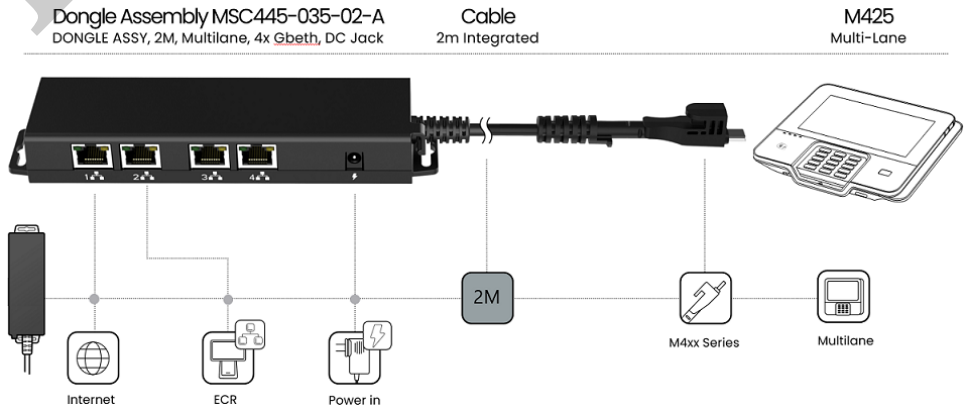

Submission only

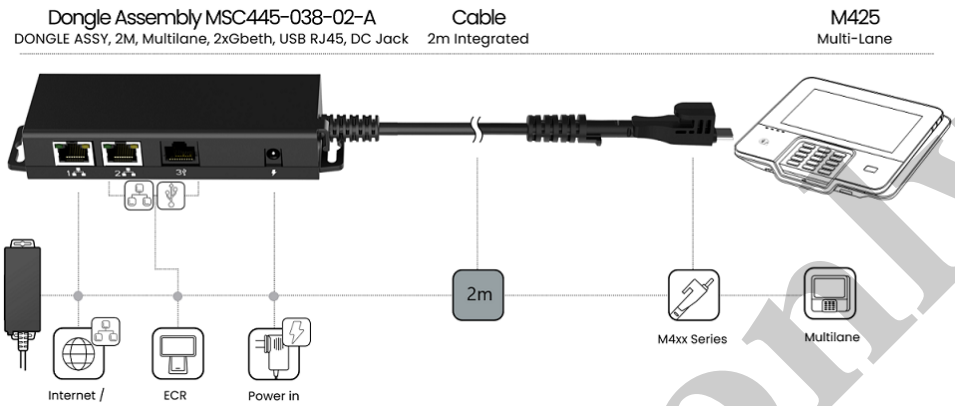

Dongle and Orange cable

Following are the supported Dongles with orange cables for M425 connectivity.

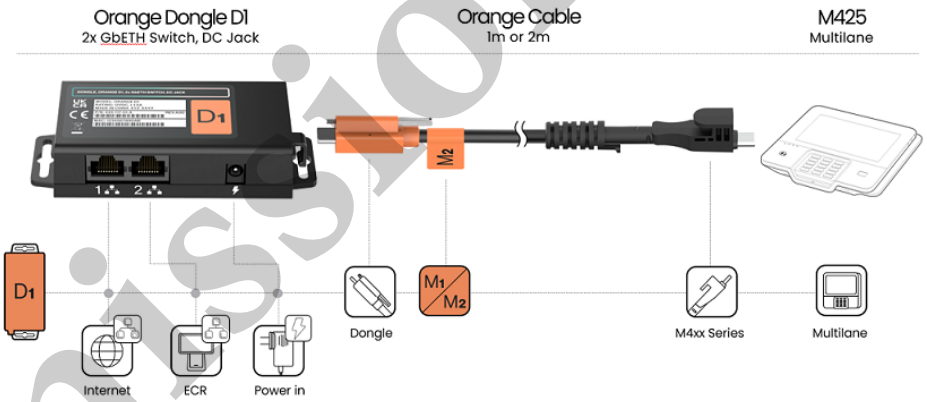

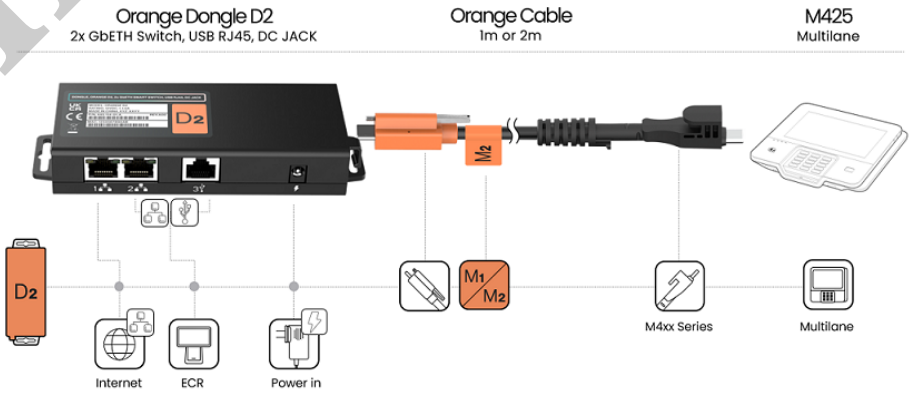

Submission only

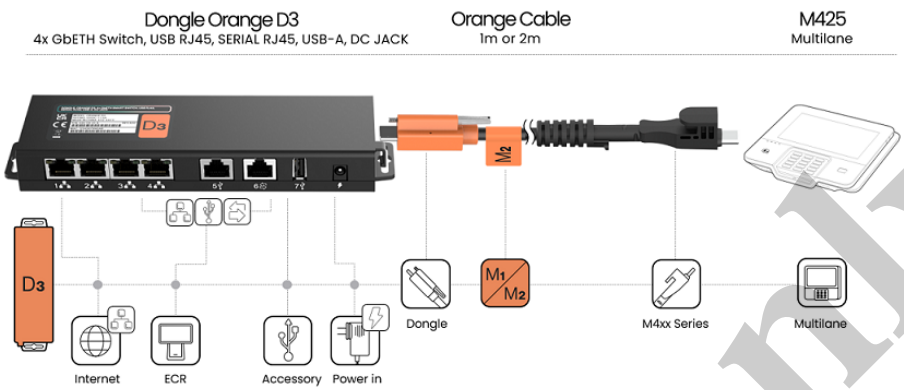

3 Close the cable compartment, insert and tighten the screw as shown below.

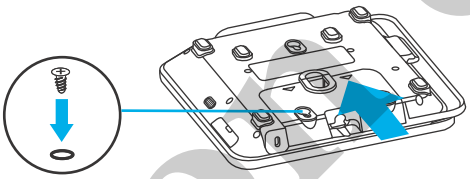

Figure 6 Closing Cable Compartment with Back Cover

MSAM Card

You may need to install one or two or three Multiple Security Access Module (MSAM) cards or replace an old one.

CAUTION Observe standard precautions in handling electrostatically sensitive devices. Electrostatic discharge can damage the equipment. Verifone recommends using a grounded anti-static wrist strap.

Installing or Replacing MSAM Card

To install or replace MSAM cards:

1. Power off the device.
2. Place the device face down on a soft and clean surface.
3. Remove the back cover of the unit.
4. Insert the MSAM cards. Carefully slide the cards one at a time into the slots until fully inserted. The correct orientation of the MSAM card is as indicated in the Figure 7.
5. Close the back cover.

Submission only

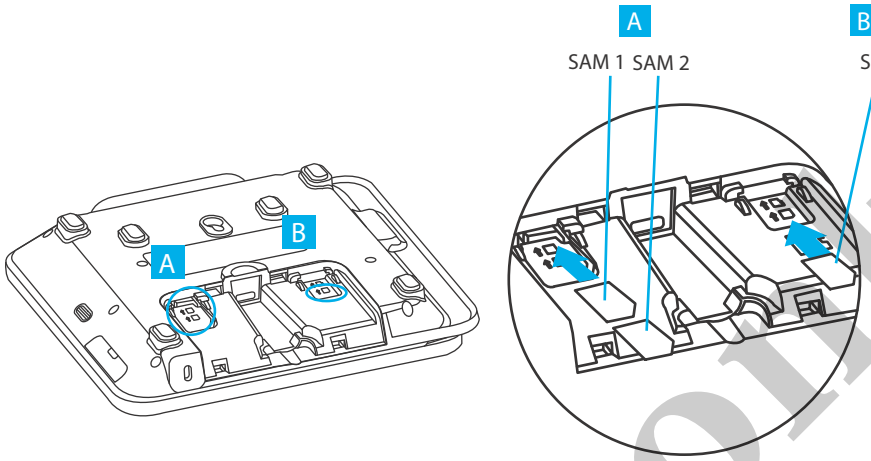

Figure 7 MSAM Insertion

NOTE Position the card's gold contacts facing downward towards the user. The card slot in the device has a set of contacts. The MSAM card has a notch on one corner to ensure that it fits into the connector base in only one way.

To replace SAM card, gently slide out the old SAM card before inserting a new one.

Micro SD (TF) Card

You may need to install one Micro SD card.

Installing Micro SD Card

To install a Micro SD card:

1. Power off the device.
2. Place the device face down on a soft and clean surface.
3. Remove the back cover of the unit.
4. Insert the SD card. Carefully slide the card into the slot until fully inserted. The correct orientation of the SD card is as indicated in the Figure 8.
5. Close the back cover.

Submission only

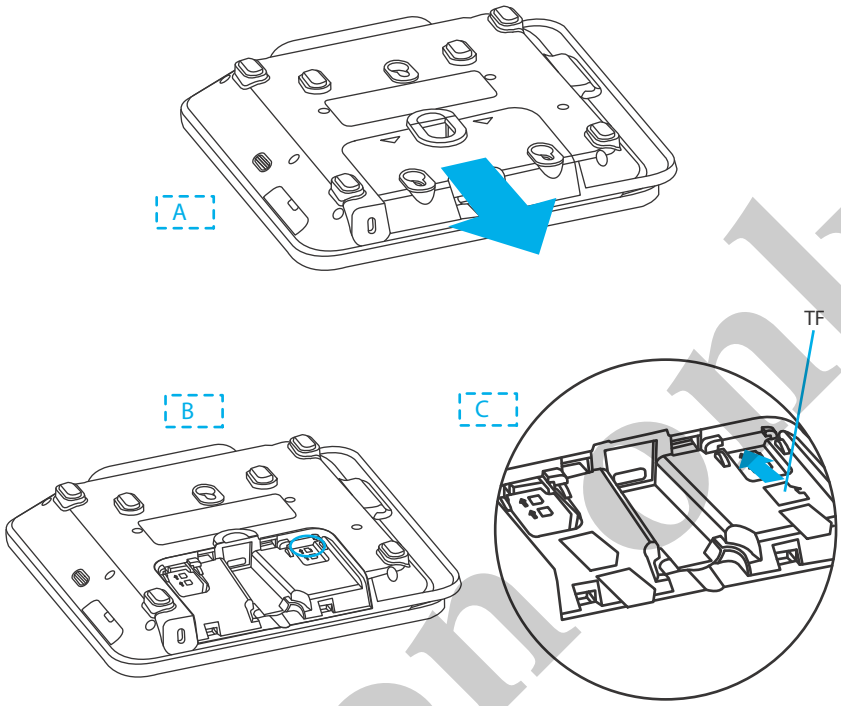

Figure 8 Micro SD Insertion

Powering the Device

The device can be powered by an external power pack/USB/Ethernet. When you have finished installing the necessary cards and/or optional devices, you are ready to power up the device.

The device requires connection to a power outlet with a dedicated circuit or an uninterruptible power supply (UPS). If other devices are plugged into the same circuit, the device can potentially experience power fluctuations that might cause malfunction. The device shuts down automatically once the power source is removed.

WARNING Do not connect the device to the power supply until all peripherals are attached.

Using an incorrectly rated power supply can damage the unit or cause it not to work properly. See Specifications for detailed power supply specifications.

Do not plug the power pack into an outdoor outlet or operate the device outdoors. Disconnecting power during a transaction can also cause unsaved data files to be lost.

NOTE Verifone recommends installing a power surge protector to protect against possible damage caused by lightning strikes and electrical surges.

Connecting M425 Device to a Power Source

To connect M425 device to an external power source:

1. Connect the Multiport cable (Example MSC445-010-00-A) to the Multiport at the back of the device, Figure 9 (B).

Submission only

2 Close back cover.

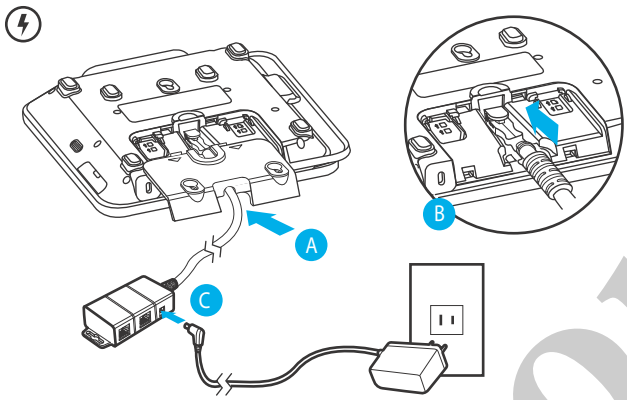

Figure 9 Connecting Base Cable to Device

3 Plug-in the power supply to the power connection port on the base module.

4 Plug the power cord into a wall outlet or power surge protector.

Connecting M425 Device via Power over USB

Connect one end of the Multiport cable at the back of the device and another end to the USB port.

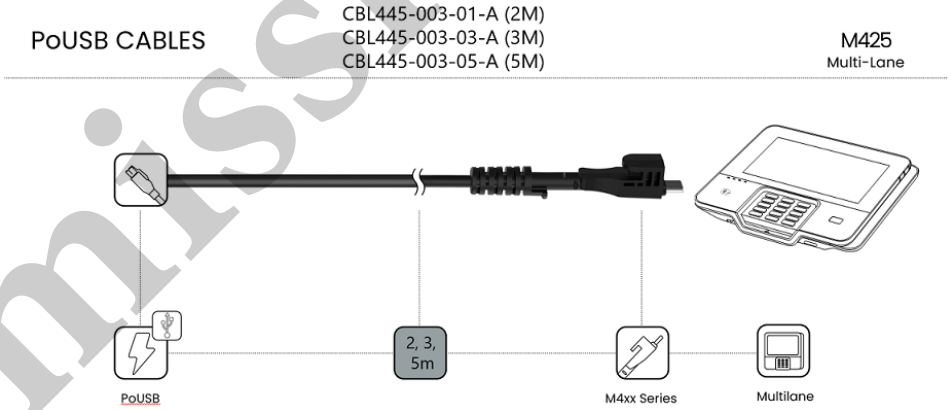

Submission only

Connecting M425 Device via Power over Ethernet

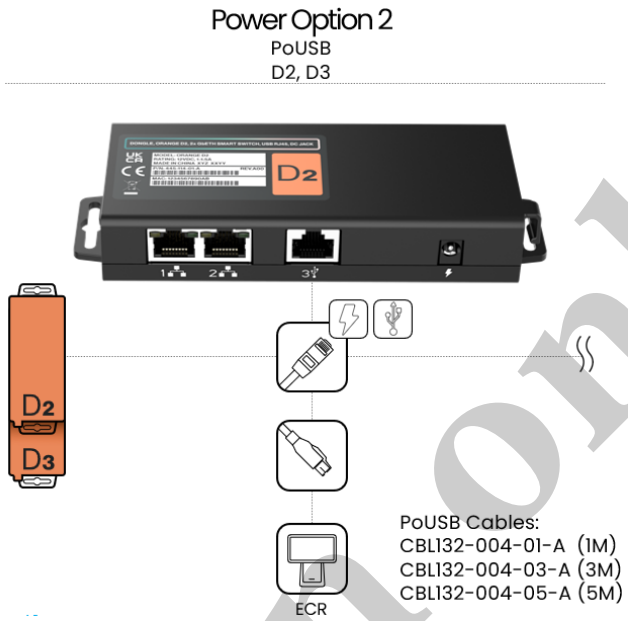

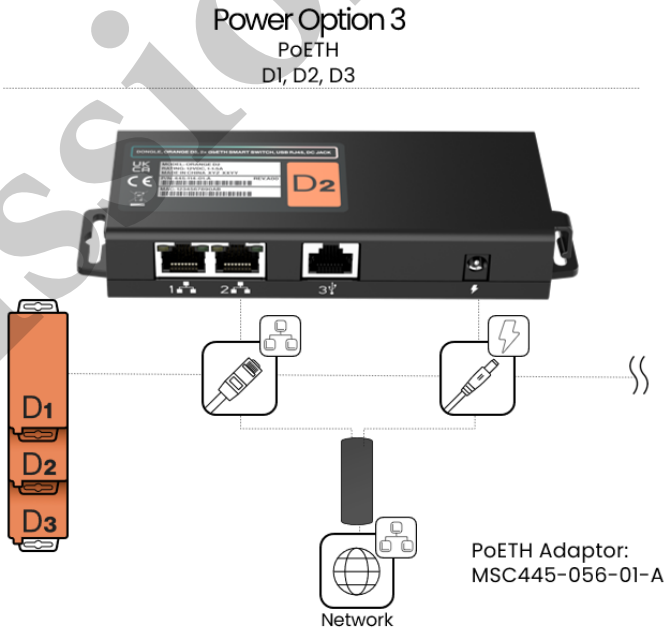

Smart Card Reader

The smart card transaction procedure can vary depending on the application. Verify the proper procedure with your application provider before performing a smart card transaction.

Using the Smart Card Reader

To use the smart card reader:

1 Position the smart card with the gold contacts facing upward.

Submission only

2 Insert the card into the smart card reader slot in a smooth, continuous motion until it sets firmly.

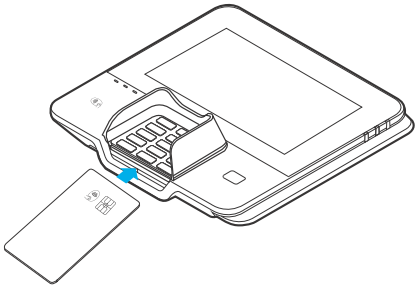

Figure 10 Smart Card Reader

3 Remove the card only when the display indicates the transaction is complete.

CAUTION

Leave the smart card in the card reader until the transaction is completed. Premature card removal can invalidate a transaction.

Magnetic Card Reader

The device has a magnetic card reader that uses a triple-track stripe reader. This gives the unit greater reliability over a wide range of swipe speeds and operating environments.

Using the MSR (Credit/Debit Card Transaction)

To use the MSR (credit/debit card transaction):

1 MSR indicator lights will flash when ready to accept MSR transactions.

2 Position a magnetic card with the stripe to face downward, as shown in Figure 11.

3 Swipe the card through the magnetic card reader.

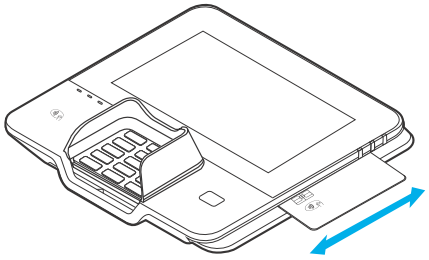

Figure 11 Using the Magnetic Card Reader

Contactless Smart Card Transaction

The device supports contactless transactions through an integrated contactless module. The device only becomes active for contactless smart card transactions when initialized by an application.

Performing a Contactless Smart Card Transaction

To perform a contactless smart card transaction:

1 Gently tap the card onto the payment device or hold the card within 4 cm against the surface of the device on the left side of the keypad above the Contactless Reader icon.

Submission only

2 Activated LED icons accompanied by a short beeping sound indicate a successful transaction.

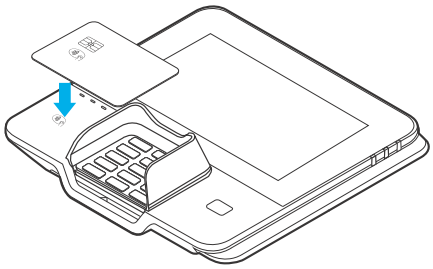

Figure 12 Contactless Smart Card Transaction

CAUTION

Do not allow metallic surfaces to come in contact with the contactless module to ensure that it works properly.

M425 Wi-Fi/BT Support

The M425 device includes an integrated WLAN RF transceiver for Wireless LAN systems with advanced power management, and an integrated radio transceiver for Bluetooth wireless systems.

Bluetooth Support

Supports BR/EDR and LE, including Eddystone and iBeacon.

Wireless Transaction

M425 device supports wireless transactions. Wireless transactions occur when initialized by an application.

Optional Accessories

These accessories can be used to further enhance the device's functionality. See for list of part numbers for additional information.

Privacy Shield

The privacy shield is used to deter the visual observation of PIN values as they are being entered by the cardholder during a transaction.

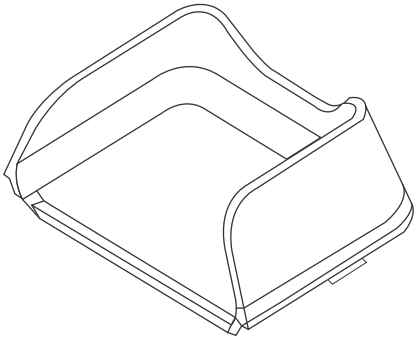

Figure 13 M425 Privacy Shield

Installing the Privacy Shield

To install the privacy shield:

1 Ensure the device's surface is clean and free of dirt.

2 Remove the protective film of the adhesive bonding.

Submission only

3 Align and place the shield onto the keypad (downwards).

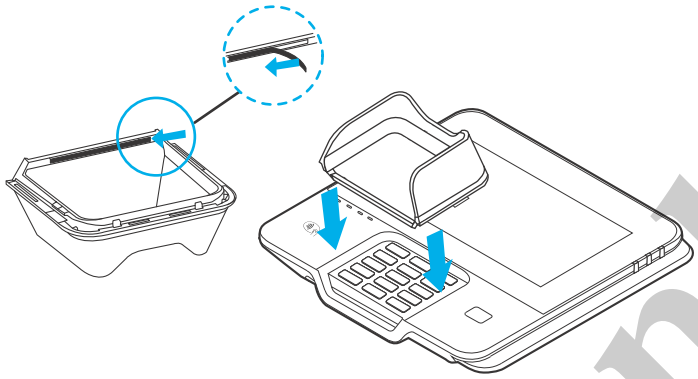

Figure 14 Installing the Privacy Shield

4 Press the adhesive bonding of the shield on the downside of the keypad. Hold it for a few seconds so that the shield is placed firmly.

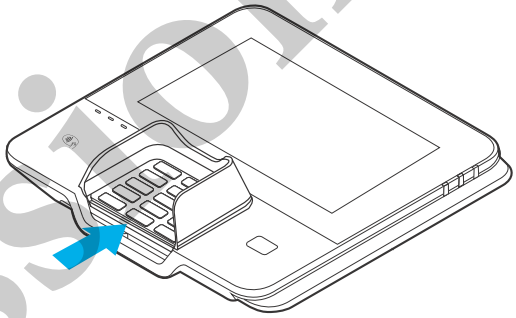

Figure 15 Privacy Shield attached to Device

Stand A mounting device that serves as the device's docking station and adds support during customer PIN-entry. The stand can be positioned on a countertop and can be adjusted during transactions for privacy.

Submission only

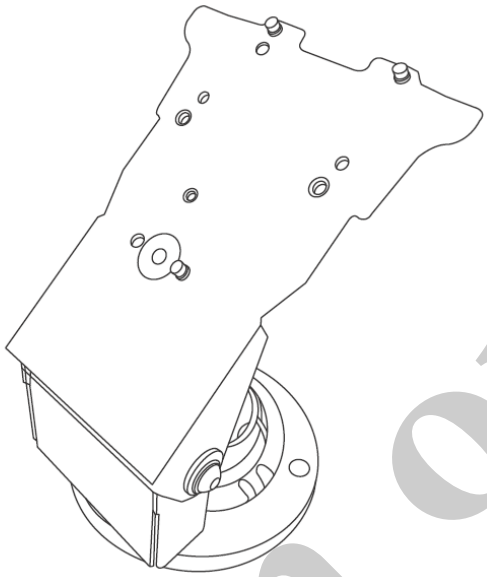

Figure 16 M425 Stand

Docking the Device on the Stand

To dock the device on the stand:

1. Place the device on the base. Ensure that the stand screws align with the keyholes found at the back of the device.

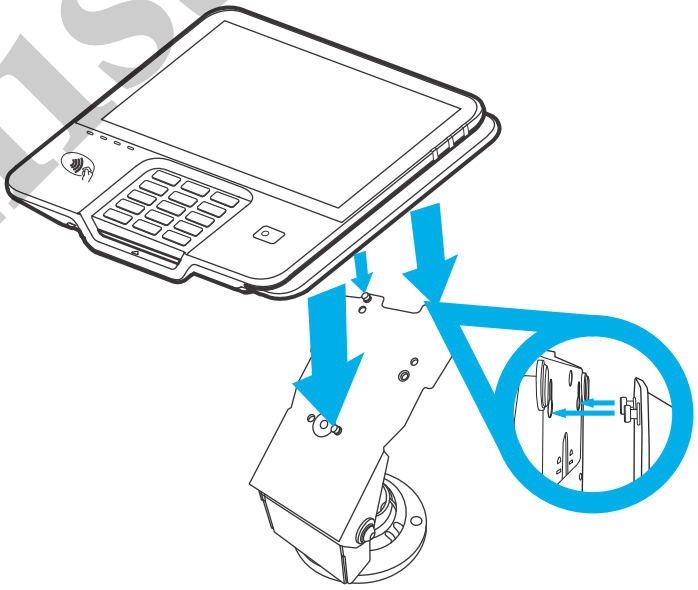

Figure 17 Docking the Device onto the Stand

Submission only

2 Slide down device to lock in place.

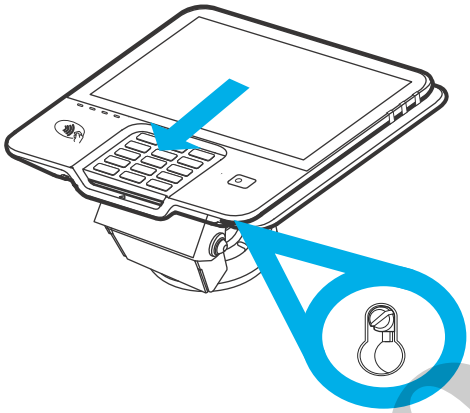

Figure 18 Locking the Device in Place

Undocking the Device from the Stand

To undock the device from the stand:

1 Slide the device upward to unhook the device from the stand.

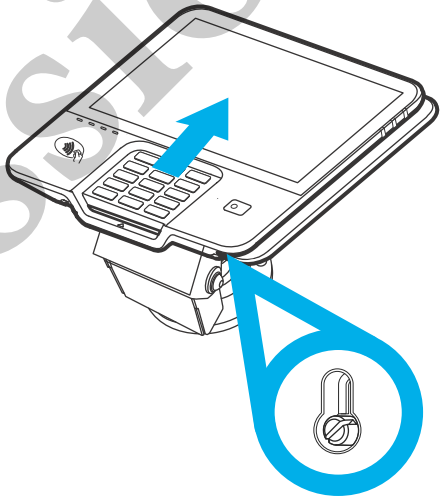

Figure 19 Undocking the Device from the Stand

Submission only

2 Lift device off the stand.

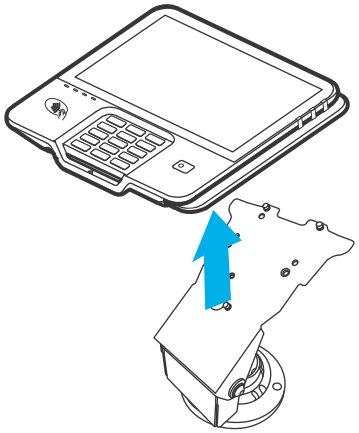

Figure 20 Lifting the Device off the Stand

NOTE When conducting customer transactions, the stand orientation can be adjusted for convenience and security.

External and Optional Devices

Multiple cable configurations are provided for the M425 device that supports peripheral devices designed for use with electronic point-of-sale system such as ECR, cash drawer, barcode scanner, external keyboard, weighing scale, external printer, external speakers, and a USB connection.

CAUTION Remove the power cord from the multiport cable before connecting any peripheral device. Reconnect the power cord only *after* you have finished connecting the peripheral device(s).

Submission only

Specifications

This chapter discusses power requirements, dimensions, and other specifications of the device.

Power Rating

- 12V DC, 1.5A

Power Pack

- CE(CB), UL/cUL, ITE listed, LPS Power Supply
- Input rated: 100-240V AC, 50/60 Hz
- Output rated: 12V DC, 1.5A, 18W

Temperature

- Operating Temperature: -10° to 50°C (14° to 122°F)

Memory

- 2 GB LPDDR3 + 16 GB eMMC
- Secure Processor: 8Mb SPI Flash

Display

- 5.5 - inch (120.77 X 67.93) HD IPS LCD, Capacitive Touch Screen

Magnetic Card Reader

- Triple Track (tracks 1, 2, 3), High Coercivity, Bi-Directional

Primary Smart Card

- ISO 7816-3, 1.8V, 3V, 5V
- Synchronous and Asynchronous Cards

MSAM Card Reader

- Three Security Access Modules (SAMs) Card Slots

uSD Card Reader

- One uSD Card Slot

Integrated Contactless Reader

- ISO 14443, ISO 18092, EMV

Keypad

- 12-Key Telco-Style Keypad

Submission only

- Three color-coded function keys below the keypad

Power button

- System suspends when pressed short
- Pops up Android menu when pressed long

Audio Interface

- Supports 3.5mm Headphone Jack
- Built-in mono Speaker
- Built-in Piezo Transducer Buzzer
- Built-in Microphone

Peripheral Ports

- Custom Multiport Cable

Security

- Complies to PCI-PTS 6.X requirements, as well as many regional security requirements.

Submission only

Maintenance and Cleaning

The M425 device has no user-maintainable parts. It can, however, be cleaned.

General Care

Your device is a product of superior design and craftsmanship and should be treated with care. The following suggestions will help you protect your warranty coverage.

- Keep the device dry. Precipitation, humidity, and all types of liquids or moisture can contain minerals that will corrode electronic circuits. If your device does get wet, switch off the power, and allow the device to dry completely before replacing it.
- Do not use or store the device in dusty and dirty areas. Its moving parts and electronic components can be damaged.
- Do not store the device in hot areas. High temperatures can shorten the life of electronic devices, damage batteries, and warp or melt certain plastics.
- Do not store the device in cold areas. Moisture can form inside the device and damage electronic circuit boards when the device returns to its normal temperature.
- Do not drop, knock, or shake the device. Rough handling can break internal circuit boards and fine mechanics.
- Do not paint the device. Paint can clog the moving parts and prevent proper operation.
- Keep the device free from any small and loose items (such as paper clips, staples, or coins) that could accidentally get inside it through an opening, such as the SAM slots or the primary smart card reader slot.
- Do not attempt to open the device other than as instructed in this guide. This device has security features that protect it from tampering. For example, the file content will be deleted if the device's outer casing is opened.
- Do not use this device in any area with a potentially explosive atmosphere. Follow all signs and instructions. Potentially explosive atmospheres include areas where you would normally be advised to turn off your vehicle engine. Sparks in such areas could cause an explosion or fire resulting in bodily injury or even death.

These suggestions apply equally to your device, or any of its attachments or accessories. If your device is not working properly, take it to the nearest authorized service facility for servicing or replacement. For your safety, have this device serviced only by a Verifone-authorized service provider.

Submission only

Additional Safety Information

The following are additional safety information in using this device.

Surface Cleaning

To clean the device, use a clean cloth slightly dampened with water and a drop or two of mild soap. For stubborn stains, use alcohol or an alcohol-based cleaner.

CAUTION

Never use thinner, trichloroethylene, or ketone-based solvents – they can deteriorate plastic or rubber parts.

Do not spray cleaners or other solutions directly onto the device.

Smart Card Reader Cleaning

The Smart Card Reader (SCR) must be cleaned on a regular basis, as dirt accumulation can lead to SCR reading problems. SCR can be cleaned using commercially available card reader cleaning cards or using recommended Verifone cleaning card (PN 02746-02).

Cleaning the SCR

To clean the SCR:

1. Inspect the device's SCR for presence of foreign objects before cleaning Customer Smart Card.
   a. If unit shows no presence of foreign objects, test the SCR function and record results. Proceed to Step 2.

CAUTION

Send your device to a Verifone authorized repair center if foreign objects are found in the SCR at any time during SCR inspection, test diagnostics, or cleaning process. Removal of foreign objects from the SCR by customers may void device warranty.

2. Clean the SCR with approved or recommended Verifone cleaning card. It is always advised to use new cleaning cards at all times.

NOTE

If using a commercially available cleaning card use ONLY an approved SCR cleaning card made specifically for POS SCR devices or Petroleum SCR.

3. Test the SCR after cleaning.
   a. If SCR tests out okay as "passing", then the unit is ready for Customer Smart Card use.
   b. If SCR tests out as "failing", then send the unit for repair. Provide details to repair center when SCR failed testing, either before cleaning OR after cleaning OR both before and after cleaning.

Submission only

Magnetic Stripe Cleaning

The Magnetic Stripe Reader (MSR) must be cleaned on a regular basis (daily to once a week, depending on usage), as dirt accumulation can lead to MSR reading problems. MSR can be cleaned using commercially available card reader cleaning cards or using recommended Verifone cleaning card (PN 02746-02).

NOTE If using a commercially available cleaning card use ONLY an approved MSR cleaning card made specifically for POS MSR Card reader devices or Petroleum MSR card readers.

Submission only

Verifone Service and Support

Contact your local Verifone representative or service provider for any problems on your device.

For product service and repair information:

- USA – Verifone Service and Support Group, 1-800-VERIFONE (837-4366), Monday - Friday, 8 A.M. - 8 P.M., Eastern time.
- International – Contact your Verifone representative.

Service Returns

You must obtain a Merchandise Return Authorization (MRA) number before returning the device to Verifone. The following procedure describes how to return one or more devices for repair or replacement (U.S. customers only).

NOTE

For international customers, please contact your local Verifone representative for assistance with your service, return, or replacement.

Returning One or More Devices for Repair or Replacement

1. Gather the following information from the printed labels on the bottom of each device to be returned:
   - Product ID, including the model and part number. For example, “M425”, “M391-xxx-xx”.
   - Serial number (S/N xxx-xxx-xxx).
2. Obtain the MRA numbers by completing the following:
   - Call Verifone within the United States toll-free at 1-800-Verifone and follow the automated menu options.
     - Select the MRA option from the automated message. The MRA department is open Monday–Friday, 8 A.M.–8 P.M., Eastern time.
     - Give the MRA representative the information gathered in Step 1.
   - Complete the Inquiry Contact Form at: https://support.verifone.com/verifone/support/repair_inquiry.do.
   - Address the Subject box with to “Verifone MRA Dept.”
   - Reference the model and part number in the Note box

NOTE

One MRA number must be issued for each device you return to Verifone, even if you are returning several of the same models.

Submission only

3. Describe the problem(s).
4. Provide the shipping address where the repaired or replacement unit must be returned.
5. Keep a record of the following items:
   - Assigned MRA number(s).
   - Verifone serial number assigned to the device you are returning for service or repair (serial numbers are located on the bottom of the unit).
   - Shipping documentation, such as air bill numbers used to trace the shipment.
   - Model(s) returned (model numbers are located on the Verifone label on the bottom of the device).

Accessories and Documentation

Verifone produces accessories and documentation for the M425. When ordering, please take note of the part number.

Verifone Online Store at https://www.verifone.com/en/us/contact-us

- USA – Verifone Service and Support Group, 1-800-837-4366, Monday - Friday, 8 A.M. - 8 P.M., Eastern time
- International – Contact your Verifone representative

M425 Certifications and Regulations	*VPN DOC391-001-EN*
M425 Quick Installation Guide	*VPN DOC391-002-EN*

Accessories

Below are the accessories used with your device. Contact your Verifone distributor to determine which of the accessories fit your requirements.

Table 3 Accessories and VPNs

Part Number	Description
STY379-001-01-A	Passive Stylus
PPL379-013-01-A	Stylus holster
PPL379-014-02-A	Privacy Shield with Bridge
PWR390-001-01-A	PS,100-240VAC, 12VDC/1.5A/18W, US, WM, 1.8M, 9.0/5.5/ 2.1MM RIGHT ANGLE
MSC445-006-00-A	CABLE ASSY, USB, ICE CUBE
MSC445-010-00-A	CABLE ASSY, ETHERNET, ICE CUBE
MSC445-011-00-A	CABLE ASSY, USB & EHERNET, ICE CUBE
MSC445-012-01-A	CABLE ASSY, ETHERNET, SERIAL, USB & USB
MSC445-018-01-A	CABLE ASSY, M4XX, ETHERNET SWITCH, 2X RJ45
MSC445-019-01-A	CABLE ASSY, M4XX POE, USB CABLE
MSC445-021-01-A	CABLE ASSY, M4XX POE, ETHERNET SWITCH CABLE
MSC445-028-00-A	CABLE ASSY, SERIAL, ICE CUBE
MSC445-029-00-A	CABLE ASSY, ETHERNET & SERIAL, ICE CUBE

Submission only

Table 3 Accessories and VPNs

Part Number	Description
MSC445-035-02-A (or *-04-A)	CABLE ASSY, M4XX, GIGA ETHERNET SWITCH, 4X RJ45, 2M (4M) USB CABLE
MSC445-038-02-A	CABLE ASSY, M4XX GB ETH 2X-USB
445-117-01-A + CBL445-031-01-A (or *-02-A)	DONGLE, ORANGE D1, 2x GbETH SWITCH, DC JACK + CABLE, 1M (2M), ORANGE M1 (M2)
445-114-01-A + CBL445-031-01-A (or *-02-A)	DONGLE, ORANGE D2, 2x GbETH SWITCH, USB RJ45, DC JACK + CABLE, 1M (2M), ORANGE M1 (M2)
445-115-01-A + CBL445-031-1-A (or *-02-A)	DONGLE, ORANGE D3, 4X GBETH SWITCH, USB RJ45, SERIAL RJ45, USB-A, DC JACK + CABLE, 1M (2M), ORANGE M1 (M2)
MSC445-056-01-A	CABLE ASSY, POE, 1X RJ45

Submission only

Troubleshooting Guidelines

This chapter lists typical examples of malfunctions that you may encounter while operating your device and the steps that you can take to resolve them.

The troubleshooting guidelines provided in the following sections are included to assist successful installation and configuration of the device. Please read these troubleshooting examples if you are having problems operating your unit. Contact your local Verifone representative for assistance if the problem persists even after performing the outlined guidelines or if the problem is not described.

NOTE

The device comes equipped with tamper-evident labels. It contains no user-serviceable parts. Do not, under any circumstance, attempt to disassemble the unit. Perform only those adjustments or repairs specified in this guide. Contact your local Verifone service provider for all other services. Service conducted by parties other than authorized Verifone representatives may void any warranty.

CAUTION

All units require use of a power supply.

Use only a Verifone-supplied power pack. Using an incorrectly rated power supply may damage the unit or cause it not to work properly. Ensure that the power supply used to power the unit matches the requirements specified on the back of the unit (see Specifications for detailed power supply specifications) before troubleshooting. If not, obtain the appropriately rated power supply before continuing with troubleshooting.

Device Does Not Start

If the device does not start:

- Ensure that the device is plugged into a dedicated power source.
- Check power cable connector is plugged in properly.

Device Display Does Not Show Correct/ Readable Info

If the device display does not show correct/readable info:

- Check all cable connections. If the problem persists, contact your local Verifone representative for assistance.

Submission only

Blank Display

When the device display is blank:

- If the device display is dark, tap the screen with the stylus or your finger. If the unit was in screen-saver mode, the screen will turn on when touched.
- If the display does not show correct or readable information, check all cable connections. If the problem persists, contact your local Verifone representative for assistance.

Keypad Does Not Respond

If the keypad does not respond properly:

- Check the device display. If it displays the wrong character or nothing at all when you press a key, follow the steps outlined in Transactions Fail to Process.
- Refer to the user documentation for that application if pressing a function key does not perform the expected action to ensure you are entering data correctly.
- Contact your local Verifone representative if the problem persists.

Transactions Fail to Process

There are several possible reasons why the unit may not be processing transactions. Use the following steps to troubleshoot failures.

Checking Magnetic Card Reader

To check magnetic card reader:

1. Perform a test transaction using one or more different magnetic stripe cards to ensure the problem is not a defective card.
2. Ensure that you are swiping cards properly (see Magnetic Card Reader).
3. Process a transaction manually using the keypad instead of the card reader. If the manual transaction works, the problem may be a defective card reader.
4. Contact your local Verifone representative if the problem persists.

Checking Smart Card Reader

To check smart card reader:

1. Perform a test transaction using several different smart cards to ensure the problem is not a defective card.
2. Ensure that the card is inserted correctly (see Smart Card Reader).
3. Ensure the MSAM cards are properly inserted in the slots and are properly secured (see MSAM Card).
4. Contact your local Verifone representative if the problem persists.

Submission only

Verifone

Verifone, Inc.
1-800-Verifone
www.verifone.com

Submission only

M425

Installation Guide

Verifone Part Number DOC391-003-EN-A, Revision A.3