# SAR TEST REPORT

## Test Report No. : 10203419H-C-R1

| | | |
|---|---|---|
| **Applicant** | : | **BROTHER INDUSTRIES, LTD.** |
| **Type of Equipment** | : | **Mobile Printer** |
| **Model No.** | : | **RJ-3150** |
| **FCC ID** | : | **B3Q8V9404** |
| **Test regulation** | : | **FCC47CFR 2.1093** |
| **Test Result** | : | **Complied** |
| **Reported SAR(1g) Value** | | **The highest reported SAR(1g)**<br>**FCC Part15.247 Body : 0.124W/kg** |

**The highest reported SAR(1g) Value for the device is 0.124 W/kg.**
**Simultaneous transmission test was excluded.**
**The highest sum of SAR(1g) for the simultaneous transmitting antennas Value for the device is 0.450 W/kg.**

1. This test report shall not be reproduced in full or partial, without the written approval of UL Japan, Inc.
2. The results in this report apply only to the sample tested.
3. This sample tested is in compliance with the limits of the above regulation.
4. The test results in this report are traceable to the national or international standards.
5. This test report must not be used by the customer to claim product certification, approval, or endorsement by NVLAP, NIST, or any agency of the Federal Government.
6. This report is a revised version of 10203419H-C. 10203419H-C is replaced with this report.

**Date of test:** March 17, 2014

**Representative test engineer:** H. Sato

Hisayoshi Sato
Engineer
Consumer Technology Division

**Approved by :** T. Hatakeda

Takahiro Hatakeda
Leader
Consumer Technology Division

NVLAP®
NVLAP LAB CODE: 200572-0

This laboratory is accredited by the NVLAP LAB CODE 200572-0, U.S.A. The tests reported herein have been performed in accordance with its terms of accreditation.
*As for the range of Accreditation in NVLAP, you may refer to the WEB address,
http://www.ul.com/japan/jpn/pages/services/emc/about/mark1/index.jsp#nvlap

# REVISION HISTORY

## Original Test Report No.: 10203419H-C

| Revision | Test report No. | Date | Page revised | Contents |
|---|---|---|---|---|
| - (Original) | 10203419H-C | April 14, 2014 | - | - |
| 1 | 10203419H-C-R1 | April 17, 2014 | P.1 | Addition of Description of the sum of SAR value |
| 1 | 10203419H-C-R1 | April 17, 2014 | P.8 | Correction of section 4.2 Step6. |

**CONTENTS** **PAGE**

SECTION 1: Customer information ..... 4
SECTION 2: Equipment under test (E.U.T.) ..... 4
2.1 Identification of E.U.T. ..... 4
2.2 Product description ..... 4
SECTION 3 : Test standard information ..... 6
3.1 Test Specification ..... 6
3.2 Procedure ..... 6
3.3 Exposure limit ..... 7
3.4 Test Location ..... 7
SECTION 4 : Test result ..... 8
4.1 Stand-alone SAR result ..... 8
4.2 Simultaneous transmission SAR result ..... 8
SECTION 5 : Description of the operating mode ..... 9
5.1 Output power operating modes ..... 9
5.2 Output power measurement results ..... 10
5.3 SAR testing operating modes ..... 12
5.4 Confirmation after SAR testing ..... 13
SECTION 6 SAR test exclusion considerations ..... 14
6.1 Standalone SAR test exclusion considerations ..... 14
SECTION 7: Description of the Body setup ..... 16
7.1 Test position for Body setup ..... 16
SECTION 8 : Test surrounding ..... 17
8.1 Measurement uncertainty ..... 17
SECTION 9 : Measurement results ..... 18
9.1 WLAN Body SAR (2.4G) ..... 18
SECTION 10 : Simultaneous transmission SAR test exclusion considerations ..... 19
10.1 Estimated SAR is calculated about Bluetooth ..... 19
10.2 Result of SUM Σ SAR1g of Body ..... 20
SECTION 11 Test instruments ..... 21
APPENDIX 1 : SAR Measurement data ..... 22
1. Evaluation procedure ..... 22
2. Measurement data ..... 23
APPENDIX2 : System Check ..... 26
1. System check result Body 2450MHz ..... 26
2. System Check Dipole (D2450V2,S/N:713) ..... 29
3. System check uncertainty ..... 37
APPENDIX 3 : System specifications ..... 38
1. Configuration and peripherals ..... 38
2. Specifications ..... 39
APPENDIX 4: Photographs of test setup ..... 54
1. Photographs of EUT ..... 54
2. Antenna position (WLAN) ..... 57
3. Antenna position (Bluetooth) ..... 58
4. Photographs of setup ..... 59

# SECTION 1: Customer information

| | | |
|---|---|---|
| Company Name | : | BROTHER INDUSTRIES, LTD. |
| Trade Name | : | brother |
| Address | : | 15-1, Naeshiro-cho, Mizuho-ku, Nagoya, Aihchi-ken, 467-8561 Japan |
| Telephone Number | : | +81-52-824-2345 |
| Facsimile Number | : | +81-52-821-1068 |
| Contact Person | : | Shuhei Nohara |

# SECTION 2: Equipment under test (E.U.T.)

## 2.1 Identification of E.U.T.

| | | |
|---|---|---|
| Type of Equipment | : | Mobile Printer |
| Model No. | : | RJ-3150 |
| Serial No. | : | U63836-B4Z556940 |
| Rating | : | Li-ion Battery (M/N: PA-BT-001)<br>DC 7.2V, 1770mAh, 13Wh<br>* The test was performed with the EUT operated by battery, not connecting to the AC adaptor. |
| Option Battery | : | N/A |
| Body-worn accessory | : | Belt Clip |
| Size of EUT | : | W: 116 mm * D: 189 mm * H: 82 mm |
| Receipt Date of Sample | : | March 12, 2014 |
| Country of Mass-production | : | China |
| Condition of EUT | : | Production prototype<br>(Not for Sale: This sample is equivalent to mass-produced items.) |
| Modification of EUT | : | No Modification by the test lab |

## 2.2 Product description

**Specification of Wireless LAN (IEEE802.11 b/g/n) and Bluetooth**

| Type of radio | Wireless LAN (IEEE802.11b/g) | Wireless LAN (IEEE802.11n20) | Bluetooth |
|---|---|---|---|
| Equipment Type | Transceiver | | |
| Frequency of Operation | Lower frequency=2412MHz<br>Upper frequency=2462MHz | Lower frequency=2412MHz<br>Upper frequency=2462MHz | Lower frequency=2402MHz<br>Upper frequency=2480MHz |
| Bandwidth & Channel spacing | Bandwidth: 20MHz<br>Ch spacing: 5MHz | Bandwidth: 20MHz<br>Ch spacing: 5MHz | Bandwidth: 1MHz<br>Ch spacing: 1MHz |
| Type of Modulation | 11b: DSSS<br>11g: OFDM | OFDM | FHSS |
| Antenna Type | PCB Antenna | | Chip Antenna |
| Antenna Connector Type | RF switch connector | | |
| Antenna Gain | 2.03dBi | 2.03dBi | 1.5dBi |
| Power Supply | DC 3.3V | | DC 1.8V |
| Operating temperature range | +5 to +60 deg. C. | | |

RJ-3150 has some model variation as follows:

RJ-3150 (this report)

RJ-3050 (Refer to report No. 10203419H-D-R1.)

The difference between these models are shown below;

| Model name | LCD | USB HOST | Transmissive sensor | Reflective sensor for peeler | Peeler | Remark |
|---|---|---|---|---|---|---|
| RJ-3150 | Yes | Yes | Yes | Yes | Yes | EUT |
| RJ-3050 | No | No | No | No | No | - |

# SECTION 3 : Test standard information

## 3.1 Test Specification

Title : **FCC47CFR 2.1093**
Radiofrequency radiation exposure evaluation: portable devices.
: **IEEE Std 1528-2003:**
IEEE Recommended Practice for Determining the Peak Spatial-Average Specific Absorption Rate (SAR) in the Human Head from Wireless Communications Devices.
: **Published RF exposure KDB procedures**

| | | |
|---|---|---|
| ☑ | **KDB450824 D01(v01r01)** | SAR Prob Cal and Ver Meas |
| ☑ | **KDB450824 D02(v01r01)** | Dipole SAR Validation Verification |
| ☑ | **KDB447498D01(v05r02)** | Mobile and Portable Device RF Exposure Procedures and Equipment Authorization Policies |
| ☐ | **KDB447498D02(v02)** | SAR Measurement Procedures for USB Dongle Transmitters |
| ☐ | **KDB648474D04(v01r01)** | SAR Evaluation Considerations for Wireless Handsets |
| ☐ | **KDB941225D01(v02)** | SAR Measurement Procedures for 3G Devices |
| ☐ | **KDB941225D02(v02r02)** | 3GPP R6 HSPA and R7 HSPA+ SAR Guidance |
| ☐ | **KDB941225D03(v01)** | Recommended SAR Test Reduction Procedures for GSM/GPRS/EDGE |
| ☐ | **KDB941225D04(v01)** | Evaluating SAR for GSM/(E)GPRS Dual Transfer Mode |
| ☐ | **KDB941225D05(v02r02)** | SAR for LTE Devices |
| ☐ | **KDB941225D06(v01r01)** | SAR test procedures for devices incorporating SAR Evaluation Procedures for Portable Devices with Wireless Router Capabilities (Hot Spot SAR) |
| ☐ | **KDB941225D07(v01r01)** | SAR Evaluation Procedures for UMPC Mini-Tablet Devices |
| ☐ | **KDB 616217 D04(v01r01)** | SAR Evaluation Considerations for Laptop, Notebook, Netbook and Tablet Computers |
| ☑ | **KDB865664 D01(v01r03)** | SAR Measurement Requirements for 100MHz to 6 GHz |
| ☑ | **KDB248227 D01(v01r02)** | SAR Measurement Procedures for 802.11a//b/g Transmitters |

**Reference**

[1]ANSI, ANSI/IEEE C95.1-1992: IEEE Standard for Safety Levels with Respect to Human Exposure to Radio Frequency Electromagnetic Fields, 3 kHz to 300 GHz, The Institute of Electrical and Electronics Engineers, Inc., New York, NY 10017, 1992.
[2]SPEAG uncertainty document (AN 15-7/AN19-17) for DASY 5 System from SPEAG (Schmid & Partner Engineering AG).

## 3.2 Procedure

| Transmitter | WLAN | Bluetooth |
|---|---|---|
| Test Procedure | Published RF exposure KDB procedures | Exemption |
| | SAR | |
| Category | FCC47CFR 2.1093 | |
| Note: UL Japan, Inc. 's SAR Work Procedures 13-EM-W0429 and 13-EM-W0430 | | |

## 3.3 Exposure limit

(A) Limits for Occupational/Controlled Exposure (W/kg)

| Spatial Average (averaged over the whole body) | Spatial Peak (averaged over any 1g of tissue) | Spatial Peak (hands/wrists/feet/ankles averaged over 10g) |
|---|---|---|
| 0.4 | 8.0 | 20.0 |

(B) Limits for General population/Uncontrolled Exposure (W/kg)

| Spatial Average (averaged over the whole body | Spatial Peak (averaged over any 1g of tissue) | Spatial Peak (hands/wrists/feet/ankles averaged over 10g) |
|---|---|---|
| 0.08 | 1.6 | 4.0 |

**Occupational/Controlled Environments:** are defined as locations where there is exposure that may be incurred by people who are aware of the potential for exposure, (i.e. as a result of employment or occupation).

**General Population/Uncontrolled Environments:** are defined as locations where there is the exposure of individuals who have no knowledge or control of their exposure.

**NOTE:GENERAL POPULATION/UNCONTROLLED EXPOSURE**
**SPATIAL PEAK(averaged over any 1g of tissue) LIMIT**
**1.6 W/kg**

## 3.4 Test Location

*Shielded room for SAR testings
UL Japan, Inc. Ise HQ EMC Lab. *NVLAP Lab. code: 200572-0
4383-326 Asama-cho, Ise-shi, Mie-ken 516-0021 JAPAN
Telephone : +81 596 24 8999 Facsimile : +81 596 24 8124

# SECTION 4 : Test result

## 4.1 Stand-alone SAR result

**Stand-alone SAR Procedure**

| No. | Capable Tx configurations | | Head SAR | Body-worn SAR | Body SAR | Product specific (Hotspot) | Note |
|---|---|---|---|---|---|---|---|
| 1 | WLAN | WLAN 2.4GHz band | - | - | Yes | - | - |
| 2 | Bluetooth | Bluetooth BDR/EDR/LE | Exemption*2 | | | | |

**Reported SAR**
Measured SAR is scaled to the maximum tune-up tolerance limit by the following formulas.
Reported SAR= Maximum tune-up tolerance limit [mW] / Measured maximum power [mW] · Measured SAR [W/kg]
Maximum tune-up tolerance limit for WLAN is 50.58 mW(17.04 dBm) by the specification from a customer.
Maximum tune-up tolerance limit for Bluetooth is 15.85 mW(12 dBm) by the specification from a customer.

| Mode | Measured maximum power [mW]*1 | Maximum tune-up tolerance limit [mW] | Measured SAR [W/kg] | Reported SAR [W/kg] |
|---|---|---|---|---|
| WLAN 11b/g/n (2.4GHz) | 43.55 | 50.58 | 0.107 | 0.124 |
| Bluetooth | -*2 | | | |

**Note**
*1 The sample used by the SAR test is within the tune-up tolerance but not more than 2 dB lower than the maximum tune-up tolerance limit. That is, measured maximum power is included the tune-up tolerance range.
*2 SAR test is not required since SAR exclusion threshold conditions are corresponded by KDB 447498 D01.
Refer to Section 6.

## 4.2 Simultaneous transmission SAR result

**<Simultaneous Procedure>**
This EUT has the unlicensed transmitter such as WLAN (802.11b/g/n) & Bluetooth devices, and the following simultaneous transmission is possible.

| No. | Capable Tx configurations | Head SAR | Body SAR | Note |
|---|---|---|---|---|
| 3 | WLAN 2.4GHz ant + Bluetooth ant | - | Yes | |

**Simultaneous transmission SAR**
<WLAN + Bluetooth >
Simultaneous transmitter evaluation based on the KDB447498D01

| | |
|---|---|
| Step1. | Standalone SAR test exclusion considerations. Refer to Section 6. |
| Step2. | Measured Stand-alone SAR for WLAN. |
| Step3. | No measured Stand-alone SAR for Bluetooth. |
| Step4. | Simultaneous transmission is possible (WLAN + Bluetooth)<br>Simultaneous transmission SAR test exclusion considerations. |
| Step5 | Estimated SAR for Bluetooth is calculated. |
| Step6. | 1.6W/kg > ∑1g SAR (WLAN + Bluetooth)<br>Body: 0.450 W/kg<br>Refer to Section 10 |
| Step7. | No simultaneous transmission SAR test. |

# SECTION 5 : Description of the operating mode

## 5.1 Output power operating modes

| Mode | Duty cycle | Frequency Band | Test Frequency | Modulation |
|---|---|---|---|---|
| IEEE802.11b | 100% | 2412-2462MHz | 2412MHz (1ch)<br>2437MHz(6ch)<br>2462MHz(11ch) | DSSS<br>(DBPSK.DQPSK.CCK) |
| IEEE802.11g | 100% | 2412-2462MHz | 2412MHz (1ch)<br>2437MHz(6ch)<br>2462MHz(11ch) | OFDM<br>(BPSK.QPSK.16QAM,64QAM) |
| IEEE802.11n20 (2.4G) | 100% | 2412-2462MHz | 2412MHz (1ch)<br>2437MHz(6ch)<br>2462MHz(11ch) | |
| **WLAN** | | | | |

*Power of the EUT was set by the software as follows;
Power settings: 11b : 17.0dBm, 11g : 13.0dBm, 11n-20 :12.0dBm

Software: Printer Setting Tool Version 1.3.001
Write PTUSB2 Version 2.0.0.1

*The above setting is the worst case. Any conditions under the normal use do not exceed the condition of setting. In addition, end users cannot change the settings of the output power of the product.

The setting values on each mode are the approximate output values of when the EUT transmits in 100% ON period.
The values of specifications are a time average values containing a transmitting OFF period.

## 5.2 Output power measurement results

**Output power measurement for WLAN**

1) WLAN (11b/g/n(2.4G))

**[IEEE802.11b] Rate Check**

| Rate [Mbps] | Freq. [MHz] | Reading [dBm] AVG | Cable Loss [dB] | Atten. [dB] | Result [dBm] AVG | Result [mW] AVG |
|---|---|---|---|---|---|---|
| 1.0 | 2437 | 5.44 | 0.94 | 10.01 | 16.39 | 43.55 |
| 2.0 | 2437 | 5.17 | 0.94 | 10.01 | 16.12 | 40.93 |
| 5.5 | 2437 | 4.33 | 0.94 | 10.01 | 15.28 | 33.73 |
| 11.0 | 2437 | 2.91 | 0.94 | 10.01 | 13.86 | 24.32 |

:Worst data rate

**IEEE802.11b 1Mbps**

| Ch | Frequency [MHz] | P/M Reading AVG | Cable Loss [dB] | Atten. [dB] | Result [dBm] AVG | Result [mW] AVG |
|---|---|---|---|---|---|---|
| 1 | 2412 | 5.26 | 0.93 | 10.01 | 16.20 | 41.69 |
| 6 | 2437 | 5.44 | 0.94 | 10.01 | 16.39 | 43.55 |
| 11 | 2462 | 5.39 | 0.95 | 10.01 | 16.35 | 43.15 |

:SAR test channel

**[IEEE802.11g] Rate Check**

| Rate [Mbps] | Frequency [MHz] | Reading [dBm] AVG | Cable Loss [dB] | Atten. [dB] | Result [dBm] AVG | Result [mW] AVG |
|---|---|---|---|---|---|---|
| 6.0 | 2437 | -0.21 | 0.94 | 10.01 | 10.74 | 11.86 |
| 9.0 | 2437 | -1.77 | 0.94 | 10.01 | 9.18 | 8.28 |
| 12.0 | 2437 | -1.78 | 0.94 | 10.01 | 9.17 | 8.26 |
| 18.0 | 2437 | -2.78 | 0.94 | 10.01 | 8.17 | 6.56 |
| 24.0 | 2437 | -3.65 | 0.94 | 10.01 | 7.30 | 5.37 |
| 36.0 | 2437 | -4.81 | 0.94 | 10.01 | 6.14 | 4.11 |
| 48.0 | 2437 | -5.73 | 0.94 | 10.01 | 5.22 | 3.33 |
| 54.0 | 2437 | -6.15 | 0.94 | 10.01 | 4.80 | 3.02 |

:Worst data rate

**IEEE802.11g 6Mbps**

| Ch | Frequency [MHz] | P/M Reading AVG | Cable Loss [dB] | Atten. [dB] | Result [dBm] AVG | Result [mW] AVG |
|---|---|---|---|---|---|---|
| 1 | 2412 | -0.44 | 0.93 | 10.01 | 10.50 | 11.22 |
| 6 | 2437 | -0.21 | 0.94 | 10.01 | 10.74 | 11.86 |
| 11 | 2462 | -0.23 | 0.95 | 10.01 | 10.73 | 11.83 |

Sample Calculation:
Result = Reading + Cable Loss + Attenuator

**[IEEE802.11n-20] Rate Check**

| Rate | Frequency [MHz] | Reading [dBm] AVG | Cable Loss [dB] | Atten. [dB] | Result [dBm] AVG | Result [mW] AVG |
|---|---|---|---|---|---|---|
| MCS0 | 2437 | -1.66 | 0.94 | 10.01 | 9.29 | 8.49 |
| MCS1 | 2437 | -3.01 | 0.94 | 10.01 | 7.94 | 6.22 |
| MCS2 | 2437 | -4.17 | 0.94 | 10.01 | 6.78 | 4.76 |
| MCS3 | 2437 | -4.93 | 0.94 | 10.01 | 6.02 | 4.00 |
| MCS4 | 2437 | -6.18 | 0.94 | 10.01 | 4.77 | 3.00 |
| MCS5 | 2437 | -7.00 | 0.94 | 10.01 | 3.95 | 2.48 |
| MCS6 | 2437 | -7.26 | 0.94 | 10.01 | 3.69 | 2.34 |
| MCS7 | 2437 | -7.55 | 0.94 | 10.01 | 3.40 | 2.19 |

:Worst data rate

**IEEE802.11n-20 MCS0**

| Ch | Frequency [MHz] | P/M Reading AVG | Cable Loss [dB] | Atten. [dB] | Result [dBm] AVG | Result [mW] AVG |
|---|---|---|---|---|---|---|
| 1 | 2412 | -1.85 | 0.93 | 10.01 | 9.09 | 8.11 |
| 6 | 2437 | -1.66 | 0.94 | 10.01 | 9.29 | 8.49 |
| 11 | 2462 | -1.67 | 0.95 | 10.01 | 9.29 | 8.49 |

Sample Calculation:
Result = Reading + Cable Loss + Attenuator

## 5.3 SAR testing operating modes

### 1) SAR measurement for WLAN

**Decision of SAR test channel**
The operating mode for SAR testing was decided by the output power

| Mode | GHz | Channel | "Default Test Channel" | | | |
|---|---|---|---|---|---|---|
| | | | FCC 15.247 | | UNII | |
| | | | 802.11b | 802.11g | | |
| 802.11 b/g/n20 | 2.412 | 1 | √ | Δ | | |
| | 2.437 | 6 | √ | Δ | | |
| | 2.462 | 11 | √ | Δ | | |

√ = "default test channels"
Δ = Possible 802.11g channels with maximum average output ¼ dB ≥ the "default test channels"

| Mode | Test Frequency | Modulation | Crest factor | Note |
|---|---|---|---|---|
| IEEE802.11b | 2437MHz(6ch) | CCK(1Mbps) | 1 | *1 |
| IEEE802.11g | Not required | | | *2 |
| IEEE802.11n20 (2.4G) | Not required | | | *2 |
| **WLAN** | | | | |
| *Power of the EUT was set by the software as follows;<br>Power settings: 11b : 17.0dBm, 11g : 13.0dBm, 11n-20 :12.0dBm<br><br>Software: Printer Setting Tool Version 1.3.001<br>Write PTUSB2 Version 2.0.0.1<br><br>*The above setting is the worst case. Any conditions under the normal use do not exceed the condition of setting. In addition, end users cannot change the settings of the output power of the product.<br><br>The setting values on each mode are the approximate output values of when the EUT transmits in 100% ON period. The values of specifications are a time average values containing a transmitting OFF period. | | | | |

*1 The other channel was not required since maximum average output power channel SAR value is less than 0.8W/kg.

*2 The 11b mode was maximum average power. The 11g/n SAR is not required for other mode because the maximum average output power for other mode is less than 1/4dB higher than that measured 11b mode.

## 5.4 Confirmation after SAR testing

It was checked that the power drift [W] is within +/-5%.The verification of power drift during the SAR test is that DASY5 system calculates the power drift by measuring the e-filed at the same location at beginning and the end of the scan measurement for each test position.

DASY5 system calculation Power drift value[dB] =20log(Ea)/(Eb)
Before SAR testing : Eb[V/m]
After SAR testing : Ea[V/m]

Limit of power drift[W] =+/-5%
X[dB]=10log[P]=10log(1.05/1)=10log(1.05)-10log(1)=0.212dB

from E-filed relations with power.
p=E^2/η=E^2/
Therefore, The correlation of power and the E-filed
XdB=10log(P)=10log(E)^2=20log(E)

Therefore,
The calculated power drift of DASY5 System must be the less than +/-0.212dB.

# SECTION 6 SAR test exclusion considerations

## 6.1 Standalone SAR test exclusion considerations

1) The 1-g and 10-g SAR test exclusion thresholds for 100 MHz to 6 GHz at test separation distances ≤ 50 mm are determined by:
*[(max. power of channel, including tune-up tolerance, mW)/(min. test separation distance, mm)]* ·[√f(GHz)] ≤ 3.0 for 1-g SAR and ≤ 7.5 for 10-g extremity SAR, where
f(GHz) is the RF channel transmit frequency in GHz
Power and distance are rounded to the nearest mW and mm before calculation
The result is rounded to one decimal place for comparison
The test exclusions are applicable only when the minimum test separation distance is ≤ 50 mm and for transmission frequencies between 100 MHz and 6 GHz. When the minimum test separation distance is < 5 mm, a distance of 5 mm is applied to determine SAR test exclusion.

WLAN 2.4GHz

| Band | Standalone SAR tested | Positiom | Mode | Upper frequency of band *1 | Maximum tune-up tolerance limit *5 | Min distance *2 | Calculation of exclusion *3 |
|---|---|---|---|---|---|---|---|
| WLAN(2.4 GHz band) | ☑ | Front | 11b DBPSK(1Mbps) | 2462 [MHz] (11ch) | 17.04 [dBm] 50.58 [mW] 51 [mW]*6 | 6 [mm] | 13.3 |
| WLAN(2.4 GHz band) | ☑ | Left Side | 11b DBPSK(1Mbps) | 2462 [MHz] (11ch) | 17.04 [dBm] 50.58 [mW] 51 [mW]*6 | 20 [mm] | 4.0 |
| WLAN(2.4 GHz band) | ☑ | Top(1) | 11b DBPSK(1Mbps) | 2462 [MHz] (11ch) | 17.04 [dBm] 50.58 [mW] 51 [mW]*6 | 23 [mm] | 3.5 |
| WLAN(2.4 GHz band) | ☐ | Top(2) | 11b DBPSK(1Mbps) | 2462 [MHz] (11ch) | 17.04 [dBm] 50.58 [mW] 51 [mW]*6 | 49 [mm] | 1.6 |
| WLAN(2.4 GHz band) | ☐ | Bottom | 11b DBPSK(1Mbps) | 2462 [MHz] (11ch) | 17.04 [dBm] 50.58 [mW] 51 [mW]*6 | 28 [mm] | 2.9 |

Bluetooth

| Band | Standalone SAR tested | Positiom | Mode | Upper frequency of band *1 | Maximum tune-up tolerance limit *5 | Min distance *2 | Calculation of exclusion *3 |
|---|---|---|---|---|---|---|---|
| Bluetooth | ☐ | Front | DH5 | 2480 [MHz] (79ch) | 12 [dBm] 15.85 [mW] 16 [mW]*6 | 14 [mm] | 1.8 |
| Bluetooth | ☐ | Right Side | DH5 | 2480 [MHz] (79ch) | 12 [dBm] 15.85 [mW] 16 [mW]*6 | 21 [mm] | 1.2 |
| Bluetooth | ☐ | Top(1) | DH5 | 2480 [MHz] (79ch) | 12 [dBm] 15.85 [mW] 16 [mW]*6 | 20 [mm] | 1.3 |
| Bluetooth | ☐ | Top(2) | DH5 | 2480 [MHz] (79ch) | 12 [dBm] 15.85 [mW] 16 [mW]*6 | 45 [mm] | 0.6 |
| Bluetooth | ☐ | Bottom | DH5 | 2480 [MHz] (79ch) | 12 [dBm] 15.85 [mW] 16 [mW]*6 | 31 [mm] | 0.8 |

2) At 100 MHz to 6 GHz and for *test separation distances* > 50 mm, the SAR test exclusion threshold is determined according to the following.
a) [Threshold at 50 mm in step 1) + (test separation distance - 50 mm)·( f(MHz)/150)] mW, at 100 MHz to 1500 MHz
b) [Threshold at 50 mm in step 1) + (test separation distance - 50 mm)·10] mW at > 1500 MHz and ≤ 6 GHz

WLAN 2.4GHz

| Band | Standalone SAR tested | Positiom | Mode | Upper frequency of band *1 | Maximum tune-up tolerance limit *5 | Min distance *2 | Calculation of threshold*4 |
|---|---|---|---|---|---|---|---|
| WLAN(2.4 GHz band) | ☐ | Rear | 11b DBPSK(1Mbps) | 2462 [MHz] (11ch) | 17.04 [dBm] 50.58 [mW] 51 [mW]*6 | 158 [mm] | 1176 [mW] |
| WLAN(2.4 GHz band) | ☐ | Right Side | 11b DBPSK(1Mbps) | 2462 [MHz] (11ch) | 17.04 [dBm] 50.58 [mW] 51 [mW]*6 | 60 [mm] | 196 [mW] |

Bluetooth

| Band | Standalone SAR tested | Positiom | Mode | Upper frequency of band *1 | Maximum tune-up tolerance limit *5 | Min distance *2 | Calculation of threshold*4 |
|---|---|---|---|---|---|---|---|
| Bluetooth | ☐ | Rear | DH5 | 2480 [MHz] (79ch) | 12 [dBm] 15.85 [mW] 16 [mW]*6 | 169 [mm] | 1285 [mW] |
| Bluetooth | ☐ | Left Side | DH5 | 2480 [MHz] (79ch) | 12 [dBm] 15.85 [mW] 16 [mW]*6 | 89 [mm] | 485 [mW] |

*1 The upper frequency of the frequency band was used in order to calculate standalone SAR test exclusion considerations.
*2 When the minimum test separation distance is < 5 mm, a distance of 5 mm is applied to determine SAR test exclusion. Refer to Appendix 4.
*3 [(max. power of channel, including tune-up tolerance, mW)/(min. test separation distance, mm)] ·[√f(GHz)] ≤ 3.0
If it is Calculation of exclusion ≤ 3.0 standalone SAR test is excluded.
*4 $[(3\cdot 50)/(\sqrt{f_{(GHz)}})]$ + (test separation distance - 50 mm)·(f(MHz)/150)] mW at > 100 MHz and ≤ 1500 MHz
$[(3\cdot 50)/(\sqrt{f_{(GHz)}})]$ + (test separation distance - 50 mm)·10] mW at > 1500 MHz and ≤ 6 GHz
If it is maximum tune-up tolerance limit < Threshold, standalone SAR test is excluded.
*5 Maximum tune-up tolerance limit is by the specification from a customer.
*6 Maximum tune-up tolerance limit (mW) is rounded to one decimal place.

# SECTION 7: Description of the Body setup

## 7.1 Test position for Body setup

**i)Procedure for SAR testing**

-The tested procedure was performed according to the KDB447498 D01 (Mobile and Portable Device RF Exposure Procedures and Equipment Authorization Policies)

**ii)Test mode**

| | |
|---|---|
| **WLAN** | **Data transmission mode (11b)** |

**iii)Test position**

| No. | Position*1 | Test distance | WLAN | | |
|---|---|---|---|---|---|
| | | | Tested | Antenna | Separation from user |
| 1 | Front | 0mm | ☑ | Fixed | 6.2mm |
| 2 | Rear | 0mm | ☐ | Fixed | 158.38mm |
| 3 | Left side | 0mm | ☑ | Fixed | 20.48mm |
| 4 | Right side | 0mm | ☐ | Fixed | 59.52mm |
| 5 | Top side(1) | 0mm | ☑ | Fixed | 23.38mm |
| 6 | Top side(2) | 0mm | ☐ | Fixed | 48.9mm |
| 7 | Bottom side | 0mm | ☐ | Fixed | 28.1mm |

*1 Refer to Section 6 and Appendix 4

# SECTION 8 : Test surrounding

## 8.1 Measurement uncertainty

The uncertainty budget has been determined for the DASY5 measurement system according to the SPEAG documents[2] and is given in the following Table.

<0.3 – 3GHz range>

| Error Description | Uncertai value ± | Probability distribution | divisor | (ci) 1g | Standard (1g) | vi or veff |
|---|---|---|---|---|---|---|
| **Measurement System** | | | | | | |
| Probe calibration | ± 6.00 | Normal | 1 | 1 | ± 6.00 | ∞ |
| Axial isotropy of the probe | ± 4.7 | Rectangular | √3 | 0.7 | ± 1.9 | ∞ |
| Spherical isotropy of the probe | ± 9.6 | Rectangular | √3 | 0.7 | ± 3.9 | ∞ |
| Boundary effects | ± 2.0 | Rectangular | √3 | 1 | ± 1.2 | ∞ |
| Probe linearity | ± 4.7 | Rectangular | √3 | 1 | ± 2.7 | ∞ |
| Detection limit | ± 1.0 | Rectangular | √3 | 1 | ± 0.6 | ∞ |
| Modulation response | ± 2.4 | Rectangular | √3 | 1 | ± 1.4 | ∞ |
| Readout electronics | ± 0.3 | Normal | 1 | 1 | ± 0.3 | ∞ |
| Response time | ± 0.8 | Rectangular | √3 | 1 | ± 0.5 | ∞ |
| Integration time | ± 2.6 | Rectangular | √3 | 1 | ± 1.5 | ∞ |
| RF ambient Noise | ± 3.0 | Rectangular | √3 | 1 | ± 1.7 | ∞ |
| RF ambient Reflections | ± 3.0 | Rectangular | √3 | 1 | ± 1.7 | ∞ |
| Probe Positioner | ± 0.8 | Rectangular | √3 | 1 | ± 0.5 | ∞ |
| Probe positioning | ± 6.7 | Rectangular | √3 | 1 | ± 3.9 | ∞ |
| Max.SAR Eval. | ± 4.0 | Rectangular | √3 | 1 | ± 2.3 | ∞ |
| **Test Sample Related** | | | | | | |
| Device positioning | ± 2.9 | Normal | 1 | 1 | ± 2.9 | 2 |
| Device holder uncertainty | ± 3.6 | Normal | 1 | 1 | ± 3.6 | 2 |
| Power drift | ± 5.0 | Rectangular | √3 | 1 | ± 2.9 | ∞ |
| Power Scaling | + 0.0 | Rectangular | √3 | 1 | ± 0.0 | ∞ |
| **Phantom and Setup** | | | | | | |
| Phantom uncertainty | ± 4.0 | Rectangular | √3 | 1 | ± 2.3 | ∞ |
| Liquid conductivity (target) | ± 5.0 | Rectangular | √3 | 0.64 | ± 1.8 | ∞ |
| Liquid conductivity (meas.) | - 2.3 | Rectangular | 1 | 0.64 | + 1.5 | ∞ |
| Liquid permittivity (target) | ± 5.0 | Rectangular | √3 | 0.6 | ± 1.7 | ∞ |
| Liquid permittivity (meas.) | - 4.5 | Rectangular | 1 | 0.6 | - 2.7 | ∞ |
| Liquid conductivity - temp.unc (below 2deg.C.) | ± 1.7 | Rectangular | √3 | 0.78 | ± 0.8 | ∞ |
| Liquid permittivity - temp.unc (below 2deg.C.) | ± 0.3 | Rectangular | √3 | 0.23 | ± 0.0 | ∞ |
| | | | | | | |
| **Combined Standard Uncertainty** | | | | | ± **12.018** | |
| **Expanded Uncertainty (k=2)** | | | | | ± **24.0** | |

# SECTION 9 : Measurement results

## 9.1 WLAN Body SAR (2.4G)

**(1)Method of measurement**

Step.1 The searching for the worst position.
The test was performed at the worst transmit rate and channel.

Note:
1)The other channel was not required since maximum average output power channel SAR value is less than 0.8W/kg.
2) Repeated measurement is not required when the original highest measured SAR is < 0.80 W/kg.
When the original highest measured SAR is ≥ 0.80 W/kg, repeat that measurement once.
Perform a second repeated measurement only if the ratio of largest to smallest SAR for the original and first repeated measurements is > 1.20 or when the original or repeated measurement is ≥ 1.45 W/kg (~ 10% from the 1-g SAR limit).

**(2)Simulated Tissue Liquid Parameter confirmation**

The dielectric parameters were checked prior to assessment using the HP85070D dielectric probe kit.
The dielectric parameters measurement is reported in each correspondent section.

| DIELECTRIC PARAMETERS MEASUREMENT RESULTS | | | | | | | | | | | |
|---|---|---|---|---|---|---|---|---|---|---|---|
| Date | Ambient Temp. [deg.c] | Relative Humidity [%] | Liquid type | Liquid Temp. [deg.c] | Measured Frequency [MHz] | Parameters | Target Value*1 | Measured | Deviation [%] | Limit [%] | Remark |
| - | - | - | - | - | 2000 | εr | 53.3 | - | - | - | *1 |
| | | | | | | σ [mho/m] | 1.52 | - | - | - | *1 |
| 17-Mar | 24 | 42 | MSL 2450 | 23.5 | 2437 | εr | 52.7 | 50.4 | -4.5 | +/-5 | *2 |
| | | | | | | σ [mho/m] | 1.94 | 1.89 | -2.3 | +/-5 | *2 |
| 17-Mar | 24 | 42 | MSL 2450 | 23.5 | 2450 | εr | 52.7 | 50.3 | -4.6 | +/-5 | *1 |
| | | | | | | σ [mho/m] | 1.95 | 1.90 | -2.8 | +/-5 | *1 |

εr: Relative Permittivity / σ : Coductivity
*1 The Target value is a parameter defined in KDB 865664D01.

**(3)Result of Body SAR**

| BODY SAR MEASUREMENT RESULTS | | | | | | | | | | | | |
|---|---|---|---|---|---|---|---|---|---|---|---|---|
| Frequency | | Modulation | Measured power | | Maximum tune-up tolerance limit | | Phantom Section | EUT Set-up Conditions | | | Measured SAR(1g) [W/kg] | Reported SAR(1g) *1 [W/kg] |
| Channel | [MHz] | | [dBm] | [mW] | [dBm] | [mW] | | Antenna | Position | Separation [mm] | Maximum of multi-peak | Maximum of multi-peak |
| **Step.1 Position searching** | | | | | | | | | | | | |
| 6 | 2437 | 11b 1Mbps | 16.39 | 43.55 | 17.04 | 50.58 | Flat | Fixed | Front | 0 | **0.093** | **0.108** |
| 6 | 2437 | 11b 1Mbps | 16.39 | 43.55 | 17.04 | 50.58 | Flat | Fixed | Left side | 0 | **0.043** | **0.050** |
| 6 | 2437 | 11b 1Mbps | 16.39 | 43.55 | 17.04 | 50.58 | Flat | Fixed | Top(1) | 0 | **0.107** | **0.124** |

*1 Reported SAR= Maximum tune-up tolerance limit [mW] / Measured power [mW] · Measured SAR [W/kg]

# SECTION 10 : Simultaneous transmission SAR test exclusion considerations

## 10.1 Estimated SAR is calculated about Bluetooth

When standalone SAR test exclusion applies to an antenna that transmits simultaneously with other antennas, the standalone SAR must be estimated according to following to determine simultaneous transmission SAR test exclusion:

*(max. power of channel, including tune-up tolerance, mW)/(min. test separation distance, mm)]·[√f(GHz)/x] W/kg for test separation distances ≤ 50 mm;*

*where x = 7.5 for 1-g SAR, and x = 18.75 for 10-g SAR.*

*0.4 W/kg for 1-g SAR and 1.0 W/kg for 10-g SAR, when the test separation distances is > 50 mm.*

Test separation distances ≤ 50 mm

| Positiom | Upper frequency of band *1 | Maximum tune-up tolerance limit *5 | Min distance *2 | Calculation of Estimated SAR*3 |
|---|---|---|---|---|
| Front | 2480 [MHz] (79 ch) | 12 [dBm] 15.85 [mW] 16 [mW]*6 | 14 [mm] | 0.240 [W/kg] |
| Right Side | 2480 [MHz] (79 ch) | 12 [dBm] 15.85 [mW] 16 [mW]*6 | 21 [mm] | 0.160 [W/kg] |
| Top(1) | 2480 [MHz] (79 ch) | 12 [dBm] 15.85 [mW] 16 [mW]*6 | 20 [mm] | 0.168 [W/kg] |
| Top(2) | 2480 [MHz] (79 ch) | 12 [dBm] 15.85 [mW] 16 [mW]*6 | 45 [mm] | 0.075 [W/kg] |
| Bottom | 2480 [MHz] (79 ch) | 12 [dBm] 15.85 [mW] 16 [mW]*6 | 31 [mm] | 0.108 [W/kg] |

Test separation distances > 50 mm

| Positiom | Upper frequency of band *1 | Maximum tune-up tolerance limit *5 | Min distance *2 | Calculation of Estimated SAR*4 |
|---|---|---|---|---|
| Rear | 2480 [MHz] (79 ch) | 12 [dBm] 15.85 [mW] 16 [mW]*6 | 169 [mm] | 0.400 [W/kg] |
| Left Side | 2480 [MHz] (79 ch) | 12 [dBm] 15.85 [mW] 16 [mW]*6 | 89 [mm] | 0.400 [W/kg] |

*1 The upper frequency of the frequency band of Bluetooth was used in order to calculate the maximum estimated SAR.
*2 Refer to Appendix 4. When the minimum test separation distance is < 5 mm, a distance of 5 mm is applied.
*3 (max. power of channel, including tune-up tolerance, mW)/(min. test separation distance, mm)]·[√f(GHz)/x] W/kg
*4 Fixed value 0.4 W/kg for 1-g SAR
*5 Maximum tune-up tolerance limit is by the specification from a customer.
*6 Maximum tune-up tolerance limit (mW) is rounded to one decimal place.

## 10.2 Result of SUM∑SAR1g of Body

If less than 1.6W/kg of sum total values become about the SAR value of two antennas, the SAR test of simultaneous transmission will be excepted.

**WLAN + Bluetooth**

| SUM ΣSAR1g (Bluetooth + WLAN) | | | |
|---|---|---|---|
| Position | Stand alone SAR(1g) [W/kg] | | SUM SAR(1g)[W/kg] |
| | Bluetooth*2 | WLAN 2.4G *1 | Bluetooth + WLAN 2.4G |
| Front | 0.240 | 0.108 | 0.348 |
| Left side | 0.400 | 0.050 | 0.450 |
| Top(1) | 0.168 | 0.124 | 0.292 |

*1 Use the reported SAR to determine simultaneous transmission SAR test exclusion.
*2 Use the estimated SAR to determine simultaneous transmission SAR test exclusion.

## SECTION 11 Test instruments

| Control No. | Instrument | Manufacturer | Model No | Serial No | Test Item | Calibration Date * Interval(month) |
|---|---|---|---|---|---|---|
| MNA-01 | Network Analyzer | Agilent/HP | E8358A | US41080381 | SAR | 2013/09/09 * 12 |
| MNCK-01 | Type N Calibration Kit | Agilent | 85032F | MY41495257 | SAR | 2013/09/07 * 12 |
| MDPK-01 | Dielectric probe kit | Agilent | 85070D | 702 | SAR | 2013/09/09 * 12 |
| COTS-MSAR-02 | S-Parameter Network Analyzer | Agilent | ー | ー | SAR | - |
| MPM-15 | Power Meter | Agilent | N1914A | MY53060017 | SAR | 2013/06/05 * 12 |
| MPSE-20 | Power sensor | Agilent | N8482H | MY53050001 | SAR | 2013/06/05 * 12 |
| MPSE-21 | Power sensor | Agilent | N8482H | MY52460010 | SAR | 2013/06/05 * 12 |
| MHDC-22 | Directional Coupler | Agilent | 87300B | 14893A | SAR | Pre Check |
| MRFA-24 | Pre Amplifier | R&K | R&K CGA020M602-2633R | B30550 | SAR | 2013/06/06 * 12 |
| MSG-13 | Signal Generator | Rohde & Schwarz | SMA 100A | 103764 | SAR | 2013/06/05 * 12 |
| MOS-26 | Thermo-Hygrometer | CUSTOM | CTH-201 | A08Q29 | SAR | 2013/05/16 * 12 |
| MDA-07 | Dipole Antenna | Schmid&Partner Engineering AG | D2450V2 | 713 | SAR | 2013/09/10 * 12 |
| MDAE-01 | Data Acquisition Electronics | Schmid&Partner Engineering AG | DAE4 | 509 | SAR | 2013/07/16 * 12 |
| MPB-07 | Dosimetric E-Field Probe | Schmid&Partner Engineering AG | EX3DV4 | 3825 | SAR | 2013/12/13 * 12 |
| MPF-02 | 2mm Oval Flat Phantom | Schmid&Partner Engineering AG | QDOVA001BB | 1045 | SAR | 2013/05/25 * 12 |
| MDH-01 | Device holder | Schmid&Partner Engineering AG | Mounting device for transmitter | - | SAR | Pre Check |
| MOS-10 | Digtal thermometer | HANNA | Checktemp-2 | MOS-10 | SAR | 2013/08/23 * 12 |
| COTS-MSAR-03 | Dasy5 | Schmid&Partner Engineering AG | DASY5 | - | SAR | - |
| MRBT-04 | SAR robot | Schmid&Partner Engineering AG | TX60 Lspeag | F13/5PP1A1/A/01 | SAR | 2013/06/19 * 12 |
| MSL2450 | | | | | Daily check | Target value ± 5% |
| SAR room | | | | | Daily check Ambient Noise<0.012W/kg | |

**The expiration date of the calibration is the end of the expired month.**
**All equipment is calibrated with valid calibrations. Each measurement data is traceable to the national or international standards.**

**As for some calibrations performed after the tested dates, those test equipment have been controlled by means of an unbroken chains of calibrations.**

# APPENDIX 1 : SAR Measurement data

## 1. Evaluation procedure

**The evaluation was performed with the following procedure:**

**Step 1:** Measurement of the E-field at a fixed location above the ear point or central position of flat phantom was used as a reference value for assessing the power drop.

**Step 2:** The SAR distribution at the exposed side of head or body position was measured at a distance of each device from the inner surface of the shell. The area covered the entire dimension of the antenna of EUT and the horizontal grid spacing was 15 mm x 15 mm, 12 mm x 12 mm or 10mm x 10mm. Based on these data, the area of the maximum absorption was determined by spline interpolation.

**Step 3:** Around this point found in the Step 2 (area scan), a volume of 30mm x 30mm x 30mm or more was assessed by measuring 7 x 7 x 7 points at least for below 3GHz and a volume of 28 mm x 28mm x 22.5mm or more was assessed by measuring 8 x 8 x 6(ratio step method (*1)) points at least for 5GHz band.

And for any secondary peaks found in the Step2 which are within 2dB of maximum peak and not with this Step3 (Zoom scan) is repeated. On the basis of this data set, the spatial peak SAR value was evaluated under the following procedure:

(1). The data at the surface were extrapolated, since the center of the dipoles is 1mm(EX3DV4) away from the tip of the probe and the distance between the surface and the lowest measuring point is 1.3 mm. The extrapolation was based on a least square algorithm [4]. A polynomial of the fourth order was calculated through the points in z-axes.
This polynomial was then used to evaluate the points between the surface and the probe tip.

(2). The maximum interpolated value was searched with a straightforward algorithm. Around this maximum the SAR values averaged over the spatial volumes (1 g or 10 g) were computed by the 3D-Spline interpolation algorithm. The 3D-Spline is composed of three one-dimensional splines with the “Not a knot"-condition (in x, y and z-directions) [4], [5]. The volume was integrated with the trapezoidal-algorithm. One thousand points (10 x 10 x 10) were interpolated to calculate the average.

(3). All neighboring volumes were evaluated until no neighboring volume with a higher average value was found.

**Step 4**: Re-measurement of the E-field at the same location as in Step 1.

***1. Ratio step method parameters used;**
**The first measurement point: 2mm from the phantom surface, the initial grid separation: 2mm, subsequent graded grid ratio: 1.5**
**These parameters comply with the requirement of the KDB 865664.**
In the section of SAR Scan Procedures-Zoom Scan, in KDB 865664 D02v01: SAR Measurement Requirements for 100MHz to 6GHz, the graded grids requirement is as follows;
“When graded grids are used (z), the first measurement point should be within 3mm of the phantom surface for measurements below 4.5GHz and within 2mm at or above 4.5GHz. The initial grid separation, closest to the phantom, should be 2.0mm. A subsequent graded ration of 1.5 is recommended and less than 2.0 is required. “

## 2. Measurement data

### i) WLAN Body

**11b 1Mbps Front 2437MHz**
Communication System: UID 0, WLAN 2.4G 11b/g/n (0); Communication System Band: WLAN 2.4G 11b/g/n;
Frequency: 2437 MHz; Duty Cycle: 1:1
Medium parameters used (interpolated): f = 2437 MHz; $\sigma$ = 1.894 S/m; $\varepsilon_r$ = 50.366; $\rho$ = 1000 kg/m$^3$
Phantom section: Flat Section
Measurement Standard: DASY5 (IEEE/IEC/ANSI C63.19-2007)
DASY5 Configuration
Probe: EX3DV4 - SN3825; ConvF(7.23, 7.23, 7.23); Calibrated: 2013/12/13;
Sensor-Surface: 2mm (Mechanical Surface Detection)
Electronics: DAE4 Sn509; Calibrated: 2013/07/16
Phantom: ELI 4.0; Type: QDOVA001BA
Measurement SW: DASY52, Version 52.8 (7); SEMCAD X Version 14.6.10 (7164)

**Area Scan (71x71x1):** Interpolated grid: dx=1.200 mm, dy=1.200 mm
Maximum value of SAR (interpolated) = 0.137 W/kg

**Zoom Scan (7x7x7)/Cube 0:** Measurement grid: dx=5mm, dy=5mm, dz=5mm
Reference Value = 7.908 V/m; Power Drift = 0.05 dB
Peak SAR (extrapolated) = 0.186 W/kg
**SAR(1 g) = 0.093 W/kg; SAR(10 g) = 0.046 W/kg**
Maximum value of SAR (measured) = 0.136 W/kg

Date: 2014/03/17
Ambient Temp. : 24.0 degree.C. Liquid Temp.; 23.5 degree.C.

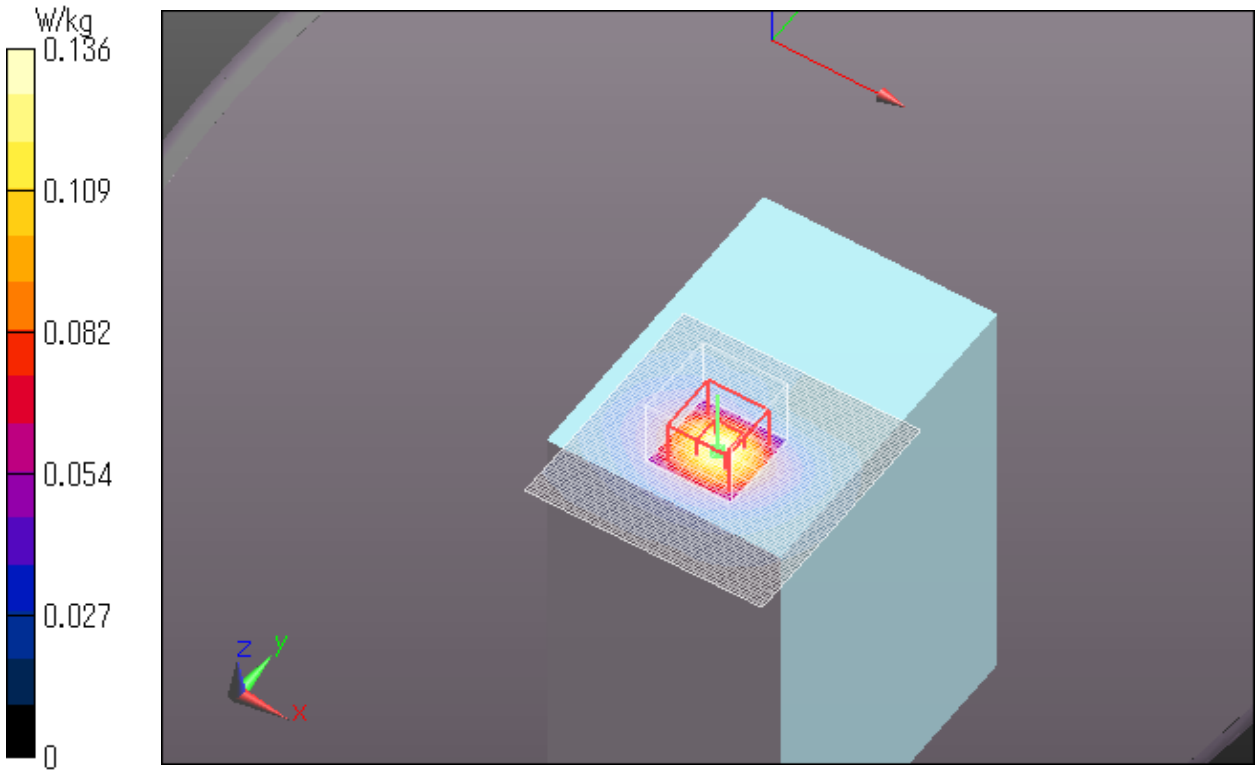

**11b 1Mbps Left side 2437MHz**
Communication System: UID 0, WLAN 2.4G 11b/g/n (0); Communication System Band: WLAN 2.4G 11b/g/n;
Frequency: 2437 MHz; Duty Cycle: 1:1
Medium parameters used (interpolated): f = 2437 MHz; $\sigma$ = 1.894 S/m; $\varepsilon_r$ = 50.366; $\rho$ = 1000 kg/m$^3$
Phantom section: Flat Section
Measurement Standard: DASY5 (IEEE/IEC/ANSI C63.19-2007)
DASY5 Configuration
Probe: EX3DV4 - SN3825; ConvF(7.23, 7.23, 7.23); Calibrated: 2013/12/13;
Sensor-Surface: 2mm (Mechanical Surface Detection)
Electronics: DAE4 Sn509; Calibrated: 2013/07/16
Phantom: ELI 4.0; Type: QDOVA001BA
Measurement SW: DASY52, Version 52.8 (7); SEMCAD X Version 14.6.10 (7164)

**Area Scan (61x61x1):** Interpolated grid: dx=1.200 mm, dy=1.200 mm
Maximum value of SAR (interpolated) = 0.0614 W/kg

**Zoom Scan (7x7x7)/Cube 0:** Measurement grid: dx=5mm, dy=5mm, dz=5mm
Reference Value = 5.708 V/m; Power Drift = -0.14 dB
Peak SAR (extrapolated) = 0.0810 W/kg
**SAR(1 g) = 0.043 W/kg; SAR(10 g) = 0.023 W/kg**
Maximum value of SAR (measured) = 0.0617 W/kg

Date: 2014/03/17
Ambient Temp. : 24.0 degree.C. Liquid Temp.; 23.5 degree.C.

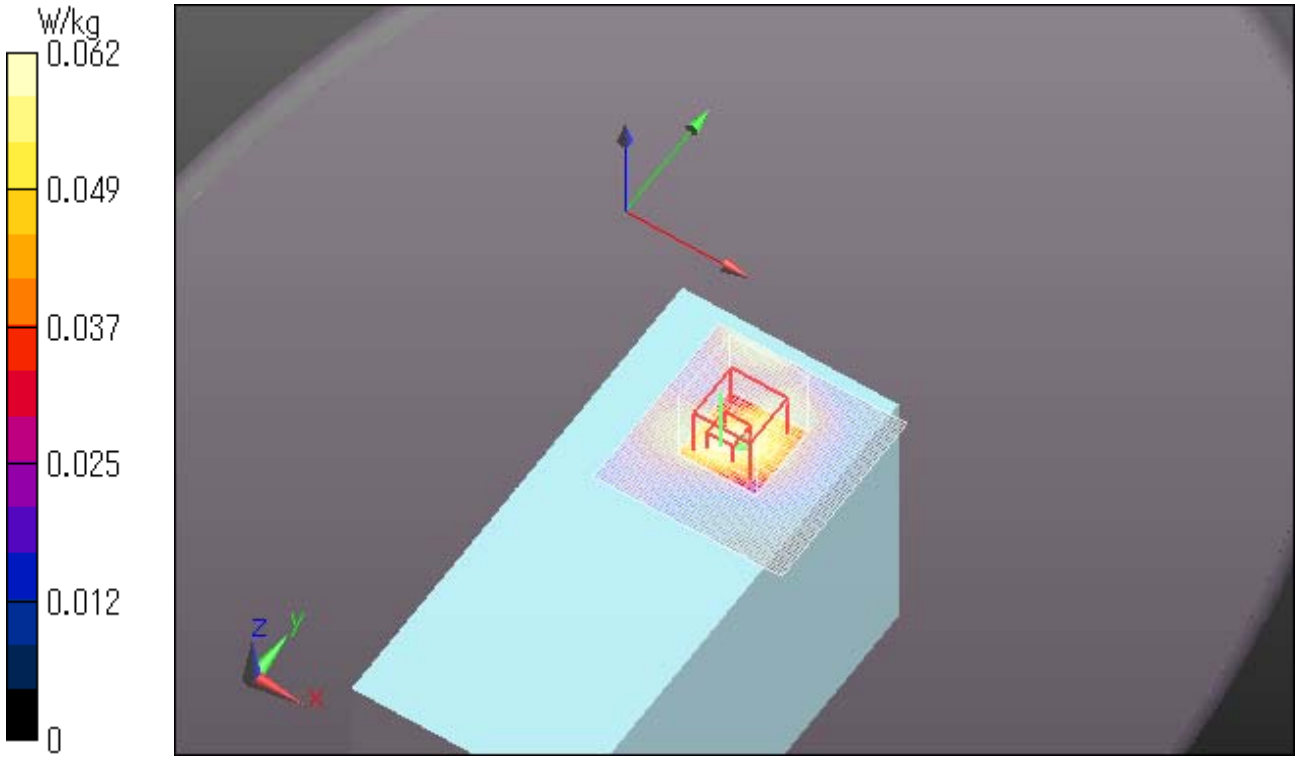

**11b 1Mbps Top(1) 2437MHz**
Communication System: UID 0, WLAN 2.4G 11b/g/n (0); Communication System Band: WLAN 2.4G 11b/g/n;
Frequency: 2437 MHz; Duty Cycle: 1:1
Medium parameters used (interpolated): f = 2437 MHz; $\sigma$ = 1.894 S/m; $\varepsilon_r$ = 50.366; $\rho$ = 1000 kg/m$^3$
Phantom section: Flat Section
Measurement Standard: DASY5 (IEEE/IEC/ANSI C63.19-2007)
DASY5 Configuration
Probe: EX3DV4 - SN3825; ConvF(7.23, 7.23, 7.23); Calibrated: 2013/12/13;
Sensor-Surface: 2mm (Mechanical Surface Detection)
Electronics: DAE4 Sn509; Calibrated: 2013/07/16
Phantom: ELI 4.0; Type: QDOVA001BA
Measurement SW: DASY52, Version 52.8 (7); SEMCAD X Version 14.6.10 (7164)

**Area Scan (61x61x1):** Interpolated grid: dx=1.200 mm, dy=1.200 mm
Maximum value of SAR (interpolated) = 0.195 W/kg

**Zoom Scan (7x7x7)/Cube 0:** Measurement grid: dx=5mm, dy=5mm, dz=5mm
Reference Value = 7.948 V/m; Power Drift = -0.08 dB
Peak SAR (extrapolated) = 0.285 W/kg
**SAR(1 g) = 0.107 W/kg; SAR(10 g) = 0.048 W/kg**
Maximum value of SAR (measured) = 0.176 W/kg

Date: 2014/03/17
Ambient Temp. : 24.0 degree.C. Liquid Temp.; 23.5 degree.C.

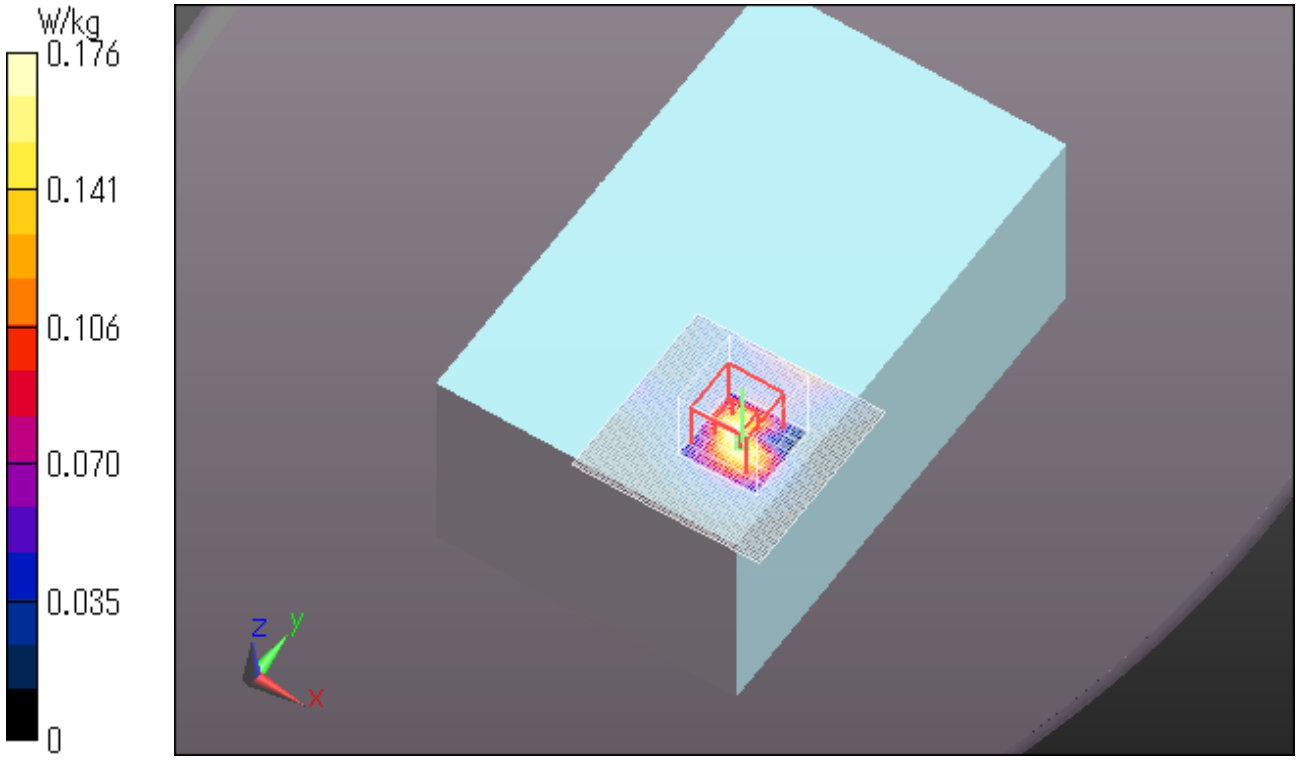

# APPENDIX2 : System Check

## 1. System check result Body 2450MHz

**Simulated Tissue Liquid Parameter confirmation**

| DIELECTRIC PARAMETERS MEASUREMENT RESULTS | | | | | | | | | | |
|---|---|---|---|---|---|---|---|---|---|---|
| Date | Ambient Temp. [deg.c] | Relative Humidity [%] | Liquid type | Liquid Temp. [deg.c] | Measured Frequency [MHz] | Parameters | Target Value*1 | Measured | Deviation [%] | Limit [%] |
| 17-Mar | 24 | 42 | MSL 2450 | 23.5 | 2450 | εr | 52.7 | 50.3 | -4.6 | +/-5 |
| | | | | | | σ [mho/m] | 1.95 | 1.90 | -2.8 | +/-5 |

εr: Relative Permittivity / σ : Coductivity
*1 The Target value is a parameter defined in KDB 865664D01.

| DIELECTRIC PARAMETERS MEASUREMENT RESULTS | | | | | | | | | | |
|---|---|---|---|---|---|---|---|---|---|---|
| Date | Ambient Temp. [deg.c] | Relative Humidity [%] | Liquid type | Liquid Temp. [deg.c] | Measured Frequency [MHz] | Parameters | Target Value*2 | Measured | Deviation [%] | Limit*3 [%] |
| 17-Mar | 24 | 42 | MSL 2450 | 23.5 | 2450 | εr | 52.2 | 50.3 | -3.7 | +/-6 |
| | | | | | | σ [mho/m] | 2.00 | 1.90 | -5.3 | +/-6 |

εr: Relative Permittivity / σ : Coductivity
*2 The target value is the calibrated dipole Body TSL parameters. (D2450V2 SN:713, Measured Body TSL parameters)
*3 The limit is for deviation provided by manufacture.

**System check result (for calibration by manufacture)**

| SYSTEM CHECK | | | | | | |
|---|---|---|---|---|---|---|
| Date | Frequency [MHz] | SAR 1g [W/kg] | | | | |
| | | Forward Power 250mW | Conversion 1W | Target 1W *4 | Deviation [%] | Limit [%] |
| | | Measured | Calculation | | | |
| 17-Mar | 2450.00 | 12.60 | 50.40 | 50.40 | 0.0 | +/-10 |

*4 The taget value is the parameter defined in SAR mesured x 4(12.6 x 4 = 50.4) in manufacturer calibrated dipole (D2450V2 SN:713
Please refer to " SAR result with Body TSL of Appendix 2 2. System Check Dipole (D2450V2,S/N: 713)".

**Body 2450MHz System Check DATA / Dipole2.4GHz / Forward Conducted Power : 250mW**

Communication System: UID 0, CW (0); Communication System Band: D2450 (2450.0 MHz); Frequency: 2450 MHz; Duty Cycle: 1:1
Medium parameters used: f = 2450 MHz; $\sigma$ = 1.895 S/m; $\varepsilon_r$ = 50.266; $\rho$ = 1000 kg/m$^3$
Phantom section: Flat Section
Measurement Standard: DASY5 (IEEE/IEC/ANSI C63.19-2007)
DASY5 Configuration
Probe: EX3DV4 - SN3825; ConvF(7.23, 7.23, 7.23); Calibrated: 2013/12/13;
Sensor-Surface: 2mm (Mechanical Surface Detection)
Electronics: DAE4 Sn509; Calibrated: 2013/07/16
Phantom: ELI 4.0; Type: QDOVA001BA
Measurement SW: DASY52, Version 52.8 (7); SEMCAD X Version 14.6.10 (7164)

**Area Scan (61x81x1):** Interpolated grid: dx=1.500 mm, dy=1.500 mm
Maximum value of SAR (interpolated) = 19.5 W/kg

**Zoom Scan (7x7x7) /Cube 0:** Measurement grid: dx=5mm, dy=5mm, dz=5mm
Reference Value = 99.061 V/m; Power Drift = -0.08 dB
Peak SAR (extrapolated) = 26.9 W/kg
**SAR(1 g) = 12.6 W/kg; SAR(10 g) = 5.73 W/kg**
Maximum value of SAR (measured) = 19.1 W/kg

Date: 2014/03/17
Ambient Temp. : 24.0 degree.C. Liquid Temp.; 23.5 degree.C.

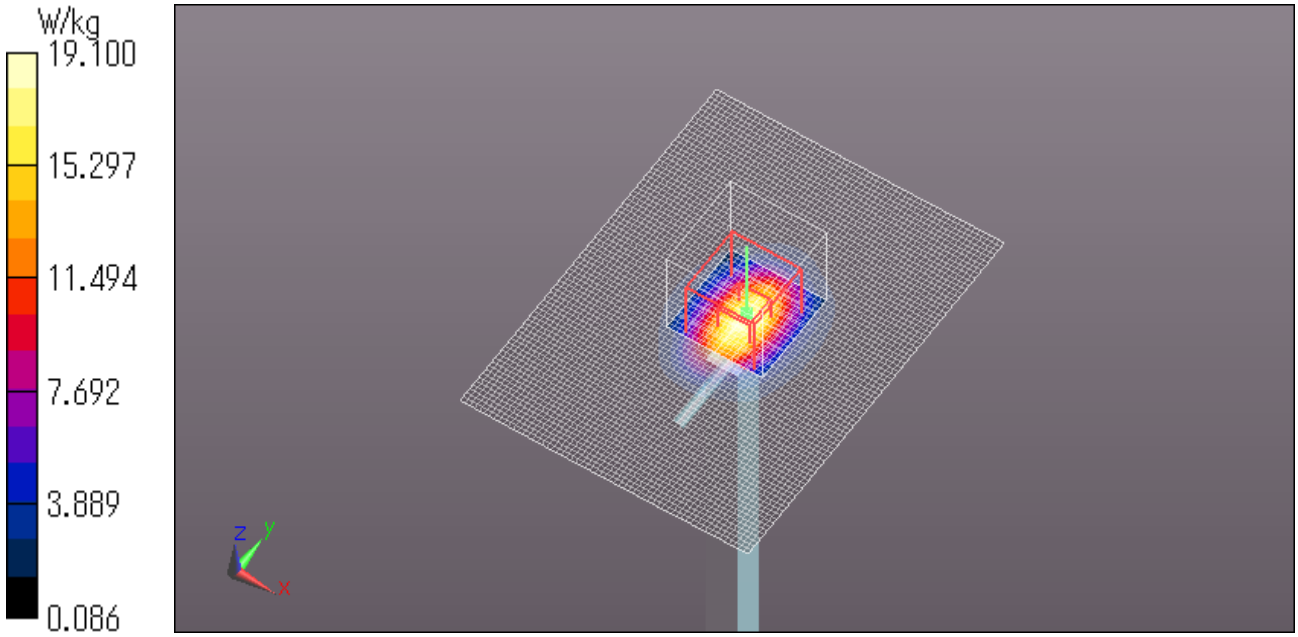

**Body 2450MHz System Check DATA / Dipole2.4GHz / Forward Conducted Power : 250mW**

Communication System: UID 0, CW (0); Communication System Band: D2450 (2450.0 MHz); Frequency: 2450 MHz; Duty Cycle: 1:1
Medium parameters used: f = 2450 MHz; $\sigma$ = 1.895 S/m; $\varepsilon_r$ = 50.266; $\rho$ = 1000 kg/m$^3$
Phantom section: Flat Section
Measurement Standard: DASY5 (IEEE/IEC/ANSI C63.19-2007)
DASY5 Configuration
Probe: EX3DV4 - SN3825; ConvF(7.23, 7.23, 7.23); Calibrated: 2013/12/13;
Sensor-Surface: 0mm (Fix Surface)
Electronics: DAE4 Sn509; Calibrated: 2013/07/16
Phantom: ELI 4.0; Type: QDOVA001BA
Measurement SW: DASY52, Version 52.8 (7); SEMCAD X Version 14.6.10 (7164)

**Z Scan (1x1x31):** Measurement grid: dx=20mm, dy=20mm, dz=5mm
Maximum value of SAR (measured) = 19.6 W/kg

Date: 2014/03/17
Ambient Temp. : 24.0 degree.C. Liquid Temp.; 23.5 degree.C.

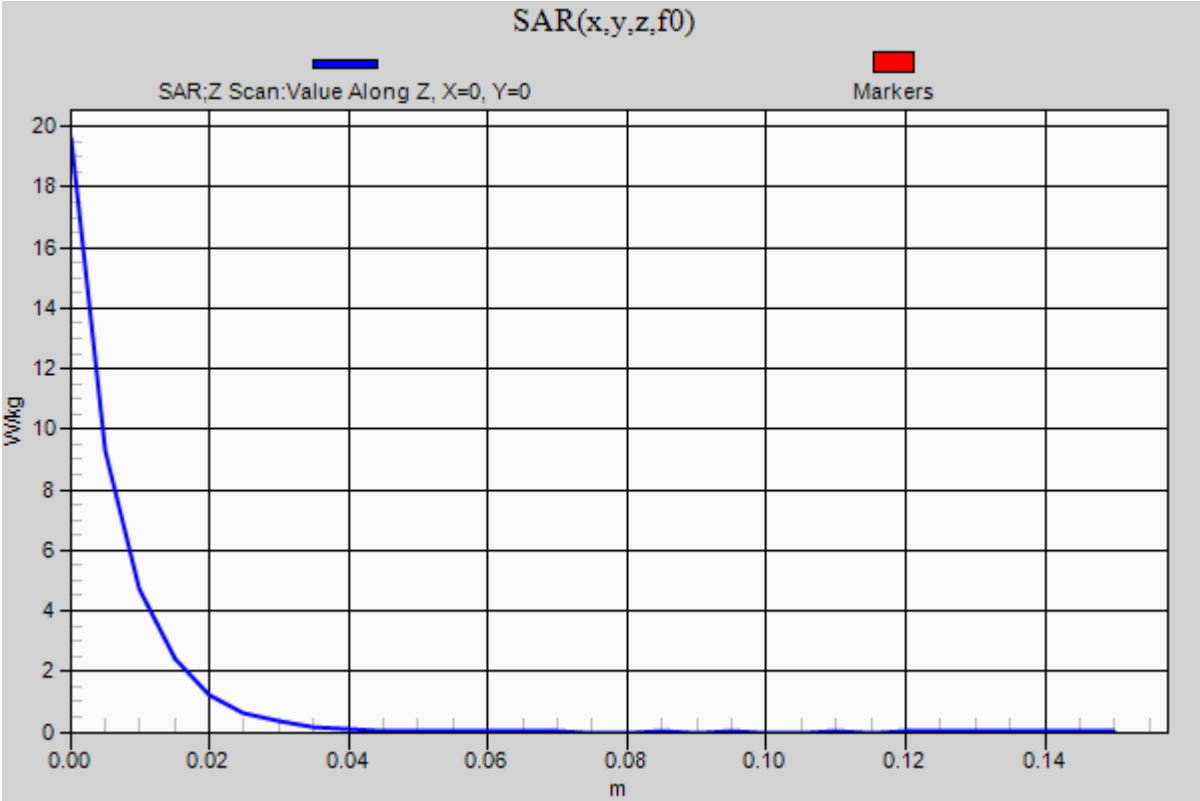

## 2. System Check Dipole (D2450V2,S/N:713)

**Calibration Laboratory of**
Schmid & Partner
Engineering AG
**Zeughausstrasse 43, 8004 Zurich, Switzerland**

S Schweizerischer Kalibrierdienst
C Service suisse d'étalonnage
Servizio svizzero di taratura
S Swiss Calibration Service

Accredited by the Swiss Accreditation Service (SAS)
**The Swiss Accreditation Service is one of the signatories to the EA Multilateral Agreement for the recognition of calibration certificates**

**Accreditation No.: SCS 108**

**Client** UL Japan (PTT)

**Certificate No: D2450V2-713_Sep13**

# CALIBRATION CERTIFICATE

| | |
|---|---|
| Object | D2450V2 - SN: 713 |
| Calibration procedure(s) | QA CAL-05.v9<br>Calibration procedure for dipole validation kits above 700 MHz |
| Calibration date: | September 10, 2013 |

This calibration certificate documents the traceability to national standards, which realize the physical units of measurements (SI).
The measurements and the uncertainties with confidence probability are given on the following pages and are part of the certificate.

All calibrations have been conducted in the closed laboratory facility: environment temperature (22 ± 3)°C and humidity < 70%.

Calibration Equipment used (M&TE critical for calibration)

| Primary Standards | ID # | Cal Date (Certificate No.) | Scheduled Calibration |
|---|---|---|---|
| Power meter EPM-442A | GB37480704 | 01-Nov-12 (No. 217-01640) | Oct-13 |
| Power sensor HP 8481A | US37292783 | 01-Nov-12 (No. 217-01640) | Oct-13 |
| Reference 20 dB Attenuator | SN: 5058 (20k) | 04-Apr-13 (No. 217-01736) | Apr-14 |
| Type-N mismatch combination | SN: 5047.3 / 06327 | 04-Apr-13 (No. 217-01739) | Apr-14 |
| Reference Probe ES3DV3 | SN: 3205 | 28-Dec-12 (No. ES3-3205_Dec12) | Dec-13 |
| DAE4 | SN: 601 | 25-Apr-13 (No. DAE4-601_Apr13) | Apr-14 |

| Secondary Standards | ID # | Check Date (in house) | Scheduled Check |
|---|---|---|---|
| Power sensor HP 8481A | MY41092317 | 18-Oct-02 (in house check Oct-11) | In house check: Oct-13 |
| RF generator R&S SMT-06 | 100005 | 04-Aug-99 (in house check Oct-11) | In house check: Oct-13 |
| Network Analyzer HP 8753E | US37390585 S4206 | 18-Oct-01 (in house check Oct-12) | In house check: Oct-13 |

| | Name | Function | Signature |
|---|---|---|---|
| Calibrated by: | Israe El-Naouq | Laboratory Technician | Israe El-Naouq |
| Approved by: | Katja Pokovic | Technical Manager | |

Issued: September 10, 2013

This calibration certificate shall not be reproduced except in full without written approval of the laboratory.

Certificate No: D2450V2-713_Sep13 Page 1 of 8

**Calibration Laboratory of**
Schmid & Partner
Engineering AG
Zeughausstrasse 43, 8004 Zurich, Switzerland

S Schweizerischer Kalibrierdienst
C Service suisse d'étalonnage
Servizio svizzero di taratura
S Swiss Calibration Service

Accredited by the Swiss Accreditation Service (SAS)
**The Swiss Accreditation Service is one of the signatories to the EA Multilateral Agreement for the recognition of calibration certificates**

Accreditation No.: **SCS 108**

**Glossary:**

| | |
|---|---|
| TSL | tissue simulating liquid |
| ConvF | sensitivity in TSL / NORM x,y,z |
| N/A | not applicable or not measured |

**Calibration is Performed According to the Following Standards:**

a) IEEE Std 1528-2003, "IEEE Recommended Practice for Determining the Peak Spatial-Averaged Specific Absorption Rate (SAR) in the Human Head from Wireless Communications Devices: Measurement Techniques", December 2003
b) IEC 62209-1, "Procedure to measure the Specific Absorption Rate (SAR) for hand-held devices used in close proximity to the ear (frequency range of 300 MHz to 3 GHz)", February 2005
c) KDB 865664, "SAR Measurement Requirements for 100 MHz to 6 GHz"

**Additional Documentation:**

d) DASY4/5 System Handbook

**Methods Applied and Interpretation of Parameters:**

- *Measurement Conditions:* Further details are available from the Validation Report at the end of the certificate. All figures stated in the certificate are valid at the frequency indicated.
- *Antenna Parameters with TSL:* The dipole is mounted with the spacer to position its feed point exactly below the center marking of the flat phantom section, with the arms oriented parallel to the body axis.
- *Feed Point Impedance and Return Loss:* These parameters are measured with the dipole positioned under the liquid filled phantom. The impedance stated is transformed from the measurement at the SMA connector to the feed point. The Return Loss ensures low reflected power. No uncertainty required.
- *Electrical Delay:* One-way delay between the SMA connector and the antenna feed point. No uncertainty required.
- *SAR measured:* SAR measured at the stated antenna input power.
- *SAR normalized:* SAR as measured, normalized to an input power of 1 W at the antenna connector.
- *SAR for nominal TSL parameters:* The measured TSL parameters are used to calculate the nominal SAR result.

The reported uncertainty of measurement is stated as the standard uncertainty of measurement multiplied by the coverage factor k=2, which for a normal distribution corresponds to a coverage probability of approximately 95%.

## Measurement Conditions

DASY system configuration, as far as not given on page 1.

| | | |
|---|---|---|
| **DASY Version** | DASY5 | V52.8.7 |
| **Extrapolation** | Advanced Extrapolation | |
| **Phantom** | Modular Flat Phantom | |
| **Distance Dipole Center - TSL** | 10 mm | with Spacer |
| **Zoom Scan Resolution** | dx, dy, dz = 5 mm | |
| **Frequency** | 2450 MHz ± 1 MHz | |

## Head TSL parameters

The following parameters and calculations were applied.

| | Temperature | Permittivity | Conductivity |
|---|---|---|---|
| **Nominal Head TSL parameters** | 22.0 °C | 39.2 | 1.80 mho/m |
| **Measured Head TSL parameters** | (22.0 ± 0.2) °C | 39.4 ± 6 % | 1.83 mho/m ± 6 % |
| **Head TSL temperature change during test** | < 0.5 °C | ---- | ---- |

## SAR result with Head TSL

| **SAR averaged over 1 $cm^3$ (1 g) of Head TSL** | Condition | |
|---|---|---|
| SAR measured | 250 mW input power | 13.0 W/kg |
| SAR for nominal Head TSL parameters | normalized to 1W | **51.6 W/kg ± 17.0 % (k=2)** |

| **SAR averaged over 10 $cm^3$ (10 g) of Head TSL** | condition | |
|---|---|---|
| SAR measured | 250 mW input power | 6.05 W/kg |
| SAR for nominal Head TSL parameters | normalized to 1W | **24.1 W/kg ± 16.5 % (k=2)** |

## Body TSL parameters

The following parameters and calculations were applied.

| | Temperature | Permittivity | Conductivity |
|---|---|---|---|
| **Nominal Body TSL parameters** | 22.0 °C | 52.7 | 1.95 mho/m |
| **Measured Body TSL parameters** | (22.0 ± 0.2) °C | 52.2 ± 6 % | 2.00 mho/m ± 6 % |
| **Body TSL temperature change during test** | < 0.5 °C | ---- | ---- |

## SAR result with Body TSL

| **SAR averaged over 1 $cm^3$ (1 g) of Body TSL** | Condition | |
|---|---|---|
| SAR measured | 250 mW input power | 12.6 W/kg |
| SAR for nominal Body TSL parameters | normalized to 1W | **49.7 W/kg ± 17.0 % (k=2)** |

| **SAR averaged over 10 $cm^3$ (10 g) of Body TSL** | condition | |
|---|---|---|
| SAR measured | 250 mW input power | 5.89 W/kg |
| SAR for nominal Body TSL parameters | normalized to 1W | **23.4 W/kg ± 16.5 % (k=2)** |

## Appendix

### Antenna Parameters with Head TSL

| | |
|---|---|
| Impedance, transformed to feed point | 51.8 Ω + 0.7 jΩ |
| Return Loss | - 34.4 dB |

### Antenna Parameters with Body TSL

| | |
|---|---|
| Impedance, transformed to feed point | 48.7 Ω + 2.8 jΩ |
| Return Loss | - 30.0 dB |

### General Antenna Parameters and Design

| | |
|---|---|
| Electrical Delay (one direction) | 1.162 ns |

After long term use with 100W radiated power, only a slight warming of the dipole near the feedpoint can be measured.

The dipole is made of standard semirigid coaxial cable. The center conductor of the feeding line is directly connected to the second arm of the dipole. The antenna is therefore short-circuited for DC-signals. On some of the dipoles, small end caps are added to the dipole arms in order to improve matching when loaded according to the position as explained in the "Measurement Conditions" paragraph. The SAR data are not affected by this change. The overall dipole length is still according to the Standard.
No excessive force must be applied to the dipole arms, because they might bend or the soldered connections near the feedpoint may be damaged.

### Additional EUT Data

| | |
|---|---|
| Manufactured by | SPEAG |
| Manufactured on | July 05, 2002 |

## DASY5 Validation Report for Head TSL

Date: 10.09.2013

Test Laboratory: SPEAG, Zurich, Switzerland

**DUT: Dipole 2450 MHz; Type: D2450V2; Serial: D2450V2 - SN: 713**

Communication System: UID 0 - CW; Frequency: 2450 MHz
Medium parameters used: f = 2450 MHz; $\sigma$ = 1.83 S/m; $\varepsilon_r$ = 39.4; $\rho$ = 1000 kg/m$^3$
Phantom section: Flat Section
Measurement Standard: DASY5 (IEEE/IEC/ANSI C63.19-2007)

DASY52 Configuration:

- Probe: ES3DV3 - SN3205; ConvF(4.52, 4.52, 4.52); Calibrated: 28.12.2012;
- Sensor-Surface: 3mm (Mechanical Surface Detection)
- Electronics: DAE4 Sn601; Calibrated: 25.04.2013
- Phantom: Flat Phantom 5.0 (front); Type: QD000P50AA; Serial: 1001
- DASY52 52.8.7(1137); SEMCAD X 14.6.10(7164)

### Dipole Calibration for Head Tissue/Pin=250 mW, d=10mm/Zoom Scan (7x7x7)/Cube 0:

Measurement grid: dx=5mm, dy=5mm, dz=5mm
Reference Value = 94.095 V/m; Power Drift = 0.04 dB
Peak SAR (extrapolated) = 26.7 W/kg
**SAR(1 g) = 13 W/kg; SAR(10 g) = 6.05 W/kg**
Maximum value of SAR (measured) = 17.0 W/kg

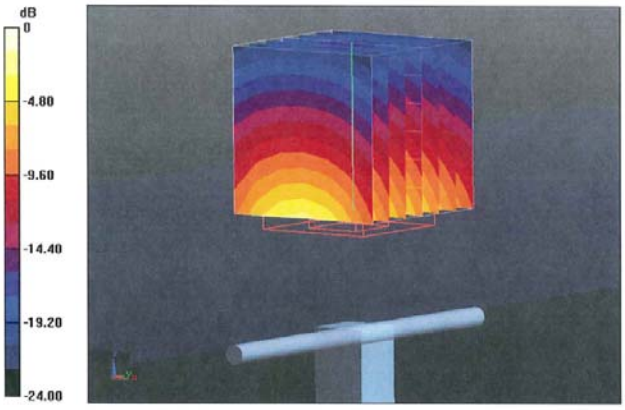


0 dB = 17.0 W/kg = 12.30 dBW/kg

**Impedance Measurement Plot for Head TSL**

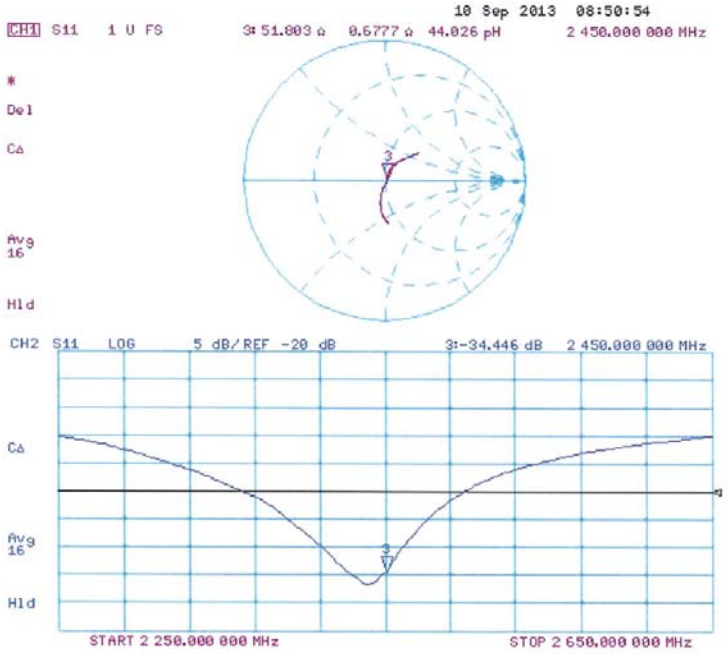

## DASY5 Validation Report for Body TSL

Date: 10.09.2013

Test Laboratory: SPEAG, Zurich, Switzerland

**DUT: Dipole 2450 MHz; Type: D2450V2; Serial: D2450V2 - SN: 713**

Communication System: UID 0 - CW; Frequency: 2450 MHz
Medium parameters used: f = 2450 MHz; $\sigma$ = 2 S/m; $\varepsilon_r$ = 52.2; $\rho$ = 1000 kg/m$^3$
Phantom section: Flat Section
Measurement Standard: DASY5 (IEEE/IEC/ANSI C63.19-2007)

DASY52 Configuration:

- Probe: ES3DV3 - SN3205; ConvF(4.42, 4.42, 4.42); Calibrated: 28.12.2012;
- Sensor-Surface: 3mm (Mechanical Surface Detection)
- Electronics: DAE4 Sn601; Calibrated: 25.04.2013
- Phantom: Flat Phantom 5.0 (back); Type: QD000P50AA; Serial: 1002
- DASY52 52.8.7(1137); SEMCAD X 14.6.10(7164)

**Dipole Calibration for Body Tissue/Pin=250 mW, d=10mm/Zoom Scan (7x7x7)/Cube 0:**
Measurement grid: dx=5mm, dy=5mm, dz=5mm
Reference Value = 94.095 V/m; Power Drift = 0.03 dB
Peak SAR (extrapolated) = 26.1 W/kg
**SAR(1 g) = 12.6 W/kg; SAR(10 g) = 5.89 W/kg**
Maximum value of SAR (measured) = 16.7 W/kg

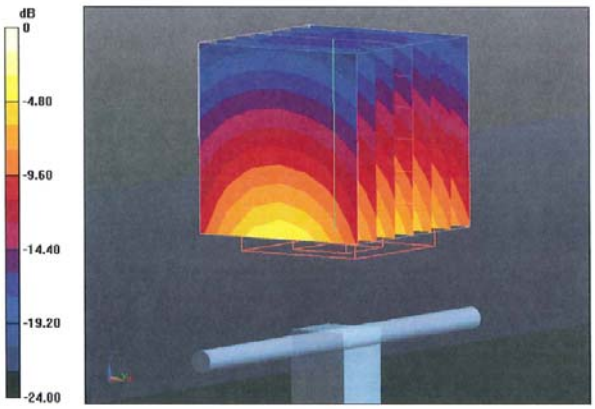


0 dB = 16.7 W/kg = 12.23 dBW/kg

**Impedance Measurement Plot for Body TSL**

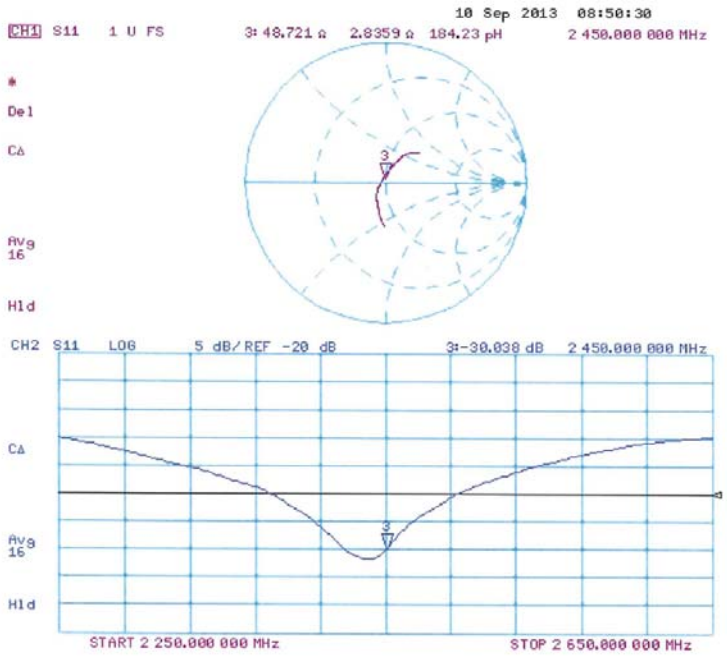

## 3. System check uncertainty

The uncertainty budget has been determined for the DASY5 measurement system according to the SPEAG documents[2] and is given in the following Table.

**Repeatability Budget for System Check for the 0.3 - 3GHz range**

| Error Description | Uncertai value ± | Probability distribution | divisor | (ci) 1g | Standard (1g) | vi or veff |
|---|---|---|---|---|---|---|
| **Measurement System** | | | | | | |
| Probe calibration | ± 1.8 | Normal | 1 | 1 | ± 1.80 | ∞ |
| Axial isotropy of the probe | ± 0.0 | Rectangular | √3 | 1 | ± 0.0 | ∞ |
| Spherical isotropy of the probe | ± 0.0 | Rectangular | √3 | 0 | ± 0.0 | ∞ |
| Boundary effects | ± 0.0 | Rectangular | √3 | 1 | ± 0.0 | ∞ |
| Probe linearity | ± 0.0 | Rectangular | √3 | 1 | ± 0.0 | ∞ |
| Detection limit | ± 0.0 | Rectangular | √3 | 1 | ± 0.0 | ∞ |
| Modulation response | ± 0.0 | Rectangular | √3 | 1 | ± 0.0 | ∞ |
| Readout electronics | ± 0.0 | Normal | 1 | 1 | ± 0.0 | ∞ |
| Response time | ± 0.0 | Rectangular | √3 | 1 | ± 0.0 | ∞ |
| Integration time | ± 0.0 | Rectangular | √3 | 1 | ± 0.0 | ∞ |
| RF ambient Noise | ± 0.0 | Rectangular | √3 | 1 | ± 0.0 | ∞ |
| RF ambient Reflections | ± 0.0 | Rectangular | √3 | 1 | ± 0.0 | ∞ |
| Probe Positioner | ± 0.4 | Rectangular | √3 | 1 | ± 0.2 | ∞ |
| Probe positioning | ± 2.9 | Rectangular | √3 | 1 | ± 1.7 | ∞ |
| Max.SAR Eval. | ± 0.0 | Rectangular | √3 | 1 | ± 0.0 | ∞ |
| **Dipole Related** | | | | | | |
| Deviation of exp.dipole | ± 0.0 | Rectangular | √3 | 1 | ± 0.0 | ∞ |
| Dipole Axis to Liquid Distance | ± 2.0 | Rectangular | √3 | 1 | ± 1.2 | ∞ |
| Input power and SAR drift meas. | ± 3.4 | Rectangular | √3 | 1 | ± 2.0 | ∞ |
| **Phantom and Setup** | | | | | | |
| Phantom uncertainty | ± 4.0 | Rectangular | √3 | 1 | ± 2.3 | ∞ |
| Liquid conductivity (target) | ± 5.0 | Rectangular | √3 | 0.78 | ± 2.3 | ∞ |
| Liquid conductivity (meas.) | + 5.0 | Normal | 1 | 0.26 | + 1.3 | ∞ |
| Liquid permittivity (target) | ± 5.0 | Rectangular | √3 | 0.78 | ± 2.3 | ∞ |
| Liquid permittivity (meas.) | - 5.0 | Normal | 1 | 0.26 | - 1.3 | ∞ |
| Liquid conductivity - temp.unc (below 2deg.C.) | ± 1.7 | Rectangular | √3 | 0.78 | ± 0.8 | ∞ |
| Liquid permittivity - temp.unc (below 2deg.C.) | ± 0.3 | Rectangular | √3 | 0.23 | ± 0.0 | ∞ |
| | | | | | | |
| **Combined Standard Uncertainty** | | | | | ± **5.548** | |
| **Expanded Uncertainty (k=2)** | | | | | ± **11.1** | |

**Note: This uncertainty budget for system check is worst-case.**

# APPENDIX 3 : System specifications

## 1. Configuration and peripherals

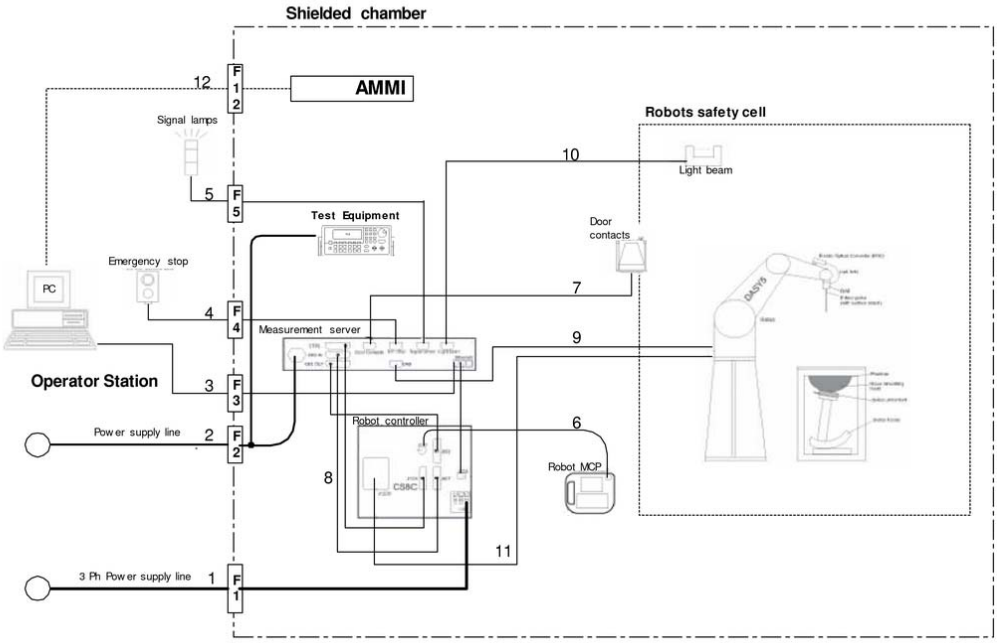


The DASY5 system for performing compliance tests consist of the following items:

a) A standard high precision 6-axis robot (Stäubli RX family) with controller and software.
An arm extension for accommodating the data acquisition electronics (DAE).

b) An isotropic field probe optimized and calibrated for the targeted measurement.

c) A data acquisition electronic (DAE), which performs the signal amplification, signal multiplexing, AD-conversion, offset measurements, mechanical surface detection, collision detection, etc. The unit is battery powered with standard or rechargeable batteries. The signal is optically transmitted to the EOC.

d) The Electro-optical converter (EOC) performs the conversion between optical and electrical of the signals for the digital communication to the DAE and for the analog signal from the optical surface detection.
The EOC is connected to the measurement server.

e) The function of the measurement server is to perform the time critical tasks such as signal filtering, control of the robot operation and fast movement interrupts.

f) The Light Beam used is for probe alignment. This improves the (absolute) accuracy of the probe positioning.

g) A computer running WinXP and the DASY5 software.

h) Remote control with teaches pendant and additional circuitry for robot safety such as warning lamps, etc.

i) The phantom, the device holder and other accessories according to the targeted measurement.

## 2. Specifications

### a)Robot TX60L

| | | |
|---|---|---|
| **Number of Axes** | : | 6 |
| **Nominal Load** | : | 2 kg |
| **Maximum Load** | : | 5kg |
| **Reach** | : | 920mm |
| **Repeatability** | : | +/-0.03mm |
| **Control Unit** | : | CS8c |
| **Programming Language** | : | VAL3 |
| **Weight** | : | 52.2kg |
| **Manufacture** | : | Stäubli Robotics |

### b)E-Field Probe

| | | |
|---|---|---|
| **Model** | : | EX3DV4 |
| **Serial No.** | : | 3825 |
| **Construction** | : | Symmetrical design with triangular core<br>Built-in shielding against static charges<br>PEEK enclosure material<br>(resistant to organic solvents, e.g., glycol ether) |
| **Frequency** | : | 10 MHz to > 6 GHz Linearity: ± 0.2 dB (30 MHz to 6 GHz) |
| **Directivity** | : | +/-0.3 dB in HSL (rotation around probe axis)<br>+/-0.5 dB in tissue material (rotation normal probe axis) |
| **Dynamic Range** | : | 10uW/g to > 100 mW/g;Linearity<br>+/-0.2 dB(noise: typically < 1uW/g) |
| **Dimensions** | : | Overall length: 337 mm (Tip: 20 mm)<br>Tip diameter: 2.5mm (Body: 12 mm)<br>Typical distance from probe tip to dipole centers: 1 mm |
| **Application** | : | Highprecision dosimetric measurement in any exposure scenario (e.g., very strong gradient fields).Only probe which enables compliance testing for frequencies up to 6GHz with precision of better 30%. |
| **Manufacture** | : | Schmid & Partner Engineering AG |

**EX3DV4 E-field Probe**

## c)Data Acquisition Electronic (DAE4)

| | | |
|---|---|---|
| **Features** | : | Signal amplifier, multiplexer, A/D converter and control logic<br>Serial optical link for communication with DASY5 embedded system (fully remote controlled)<br>Two step probe touch detector for mechanical surface detection and emergency robot stop |
| **Measurement Range** | : | -100 to +300 mV (16 bit resolution and two range settings: 4mV, 400mV) |
| **Input Offset voltage** | : | < 5 µV (with auto zero) |
| **Input Resistance** | : | 200 MΩ |
| **Input Bias Current** | : | < 50 fA |
| **Battery Power** | : | > 10 h of operation (with two 9.6 V NiMH accus) |
| **Dimension** | : | 60 x 60 x 68 mm |
| **Manufacture** | : | Schmid & Partner Engineering AG |

## d)Electro-Optic Converter (EOC)

| | | |
|---|---|---|
| **Version** | : | EOC 61 |
| **Description** | : | for TX60 robot arm, including proximity sensor |
| **Manufacture** | : | Schmid & Partner Engineering AG |

## e)DASY5 Measurement server

| | | |
|---|---|---|
| **Features** | : | Intel ULV Celeron 400MHz<br>128MB chip disk and 128MB RAM<br>16 Bit A/D converter for surface detection system<br>Vacuum Fluorescent Display<br>Robot Interface<br>Serial link to DAE (with watchdog supervision)<br>Door contact port (Possibility to connect a light curtain)<br>Emergency stop port (to connect the remote control)<br>Signal lamps port<br>Light beam port<br>Three Ethernet connection ports<br>Two USB 2.0 Ports<br>Two serial links<br>Expansion port for future applications |
| **Dimensions (L x W x H)** | : | 440 x 241 x 89 mm |
| **Manufacture** | : | Schmid & Partner Engineering AG |

## f) Light Beam Switches

| | | |
|---|---|---|
| **Version** | : | LB5 |
| **Dimensions (L x H)** | : | 110 x 80 mm |
| **Thickness** | : | 12 mm |
| **Beam-length** | : | 80 mm |
| **Manufacture** | : | Schmid & Partner Engineering AG |

## g)Software

| | | |
|---|---|---|
| **Item** | : | Dosimetric Assessment System DASY5 |
| **Type No.** | : | SD 000 401A, SD 000 402A |
| **Software version No.** | : | DASY52, Version 52.6 (1) |
| **Manufacture / Origin** | : | Schmid & Partner Engineering AG |

## h)Robot Control Unit

| | | |
|---|---|---|
| **Weight** | : | 70 Kg |
| **AC Input Voltage** | : | selectable |
| **Manufacturer** | : | Stäubli Robotics |

## i)Phantom and Device Holder

### Phantom

| | | |
|---|---|---|
| **Type** | : | SAM Twin Phantom V4.0 |
| **Description** | : | The shell corresponds to the specifications of the Specific Anthropomorphic Mannequin (SAM) phantom defined in IEEE 1528 and IEC 62209-1. It enables the dosimetric evaluation of left and right hand phone usage as well as body mounted usage at the flat phantom region. A cover prevents evaporation of the liquid. Reference markings on the phantom allow the complete setup of all predefined phantom positions and measurement grids by teaching three points with the robot. |
| **Material** | : | Vinylester, glass fiber reinforced (VE-GF) |
| **Shell Material** | : | Fiberglass |
| **Thickness** | : | 2.0 +/-0.2 mm |
| **Dimensions** | : | Length: 1000 mm Width: 500 mm Height: adjustable feet |
| **Volume** | : | Approx. 25 liters |
| **Manufacture** | : | Schmid & Partner Engineering AG |

| | | |
|---|---|---|
| **Type** | : | 2mm Flat phantom ERI4.0 |
| **Description** | : | Phantom for compliance testing of handheld and body-mounted wireless devices in the frequency range of 30 MHz to 6 GHz. ELI4 is fully compatible with the latest draft of the standard IEC 62209 Part II and all known tissue simulating liquids. ELI4 has been optimized regarding its performance and can be integrated into our standard phantom tables. A cover prevents evaporation of the liquid. Reference markings on the phantom allow installation of the complete setup, including all predefined phantom positions and measurement grids, by teaching three points. The phantom is supported by software version DASY4.5 and higher and is compatible with all SPEAG dosimetric probes and dipoles. |
| **Material** | : | Vinylester, glass fiber reinforced (VE-GF) |
| **Shell Thickness** | : | 2.0 ± 0.2 mm (sagging: <1%) |
| **Filling Volume** | : | approx. 30 liters |
| **Dimensions** | : | Major ellipse axis: 600 mm Minor axis: 400 mm |
| **Manufacture** | : | Schmid & Partner Engineering AG |

### Device Holder

In combination with the Twin SAM Phantom V4.0/V4.0c or ELI4, the Mounting Device enables the rotation of the mounted transmitter device in spherical coordinates. Rotation point is the ear opening point. Transmitter devices can be easily and accurately positioned according to IEC, IEEE, FCC or other specifications. The device holder can be locked for positioning at different phantom sections (left head, right head, flat).

**Material** : POM

### Laptio Extensions kit

Simple but effective and easy-to-use extension for Mounting Device that facilitates the testing of larger devices according to IEC 62209-2 (e.g., laptops, cameras, etc.). It is lightweight and fits easily on the upper part of the Mounting Device in place of the phone positioner. The extension is fully compatible with the Twin-SAM, ELI4 Phantoms.

**Material** : POM, Acrylic glass, Foam

### Urethane

For this measurement, the urethane foam was used as device holder.

**j)Simulated Tissues (Liquid)**

The following tissue formulations are provided for reference only as some of the parameters have not been thoroughly verified. The composition of ingredients may be modified accordingly to achieve the desired target tissue parameters required for required for routine SAR evaluation.

| Mixture (%) | Frequency (MHz) | | | | | | | | | |
|---|---|---|---|---|---|---|---|---|---|---|
| | 450 | | 900 | | 1800 | | 1950 | | 2450 | |
| Tissue Type | Head | Body | Head | Body | Head | Body | Head | Body | Head | Body |
| Water | 38.91 | 46.21 | 40.29 | 50.75 | 55.24 | 70.17 | 55.41 | 69.79 | 55.0 | 68.64 |
| Sugar | 56.93 | 51.17 | 57.90 | 48.21 | - | - | - | - | - | - |
| Cellulose | 0.25 | 0.18 | 0.24 | 0.00 | - | - | | - | - | - |
| Salt (NaCl) | 3.79 | 2.34 | 1.38 | 0.94 | 0.31 | 0.39 | 0.08 | 0.2 | - | - |
| Preventol | 0.12 | 0.08 | 0.18 | 0.10 | - | | | | - | - |
| DGMBE | - | - | - | - | 44.45 | 29.44 | 44.51 | 30.0 | 45.0 | 31.37 |
| Dielectric Constant | 43.42 | 58.0 | 42.54 | 56.1 | 42.0 | 56.8 | 39.9 | 54.0 | 39.8 | 52.5 |
| Conductivity (S/m) | 0.85 | 0.83 | 0.91 | 0.95 | 1.0 | 1.07 | 1.42 | 1.45 | 1.88 | 1.78 |

Note:DGMBE(Diethylenglycol-monobuthyl ether)

The simulated tissue (liquid) of 1800MHz was used for the test frequency of 1700MHz to 1800MHz.

| Mixture (%) | Frequency(MHz) | |
|---|---|---|
| | 750 | 1450 |
| Tissue Type | Head and Body | Head and Body |
| Water | 35-58% | 52-75% |
| Sugar | 40-60% | - |
| Cellulose | <0.3% | - |
| Salt (NaCl) | 0-6% | <1% |
| Preventol | 0.1-0.7% | - |
| DGMBE | - | 25-48% |

| Mixture (%) | Frequency(MHz) | |
|---|---|---|
| | 5800 | |
| Tissue Type | Head | Body |
| Water | 64.0 | 78.0 |
| Mineral Oil | 18.0 | 11.0 |
| Emulsifiers | 15.0 | 9.0 |
| Additives and salt | 3.0 | 2.0 |

## 3. Dosimetric E-Field Probe Calibration (EX3DV4, S/N: 3825)

**Calibration Laboratory of**
Schmid & Partner
Engineering AG
**Zeughausstrasse 43, 8004 Zurich, Switzerland**

**S** Schweizerischer Kalibrierdienst
**C** Service suisse d'étalonnage
**S** Servizio svizzero di taratura
Swiss Calibration Service

Accredited by the Swiss Accreditation Service (SAS)
**The Swiss Accreditation Service is one of the signatories to the EA Multilateral Agreement for the recognition of calibration certificates**

**Accreditation No.: SCS 108**

**Client** UL Japan (PTT)

**Certificate No: EX3-3825_Dec13**

# CALIBRATION CERTIFICATE

| | |
|---|---|
| Object | EX3DV4 - SN:3825 |
| Calibration procedure(s) | QA CAL-01.v9, QA CAL-14.v4, QA CAL-23.v5, QA CAL-25.v6<br>Calibration procedure for dosimetric E-field probes |
| Calibration date: | December 13, 2013 |

This calibration certificate documents the traceability to national standards, which realize the physical units of measurements (SI).
The measurements and the uncertainties with confidence probability are given on the following pages and are part of the certificate.

All calibrations have been conducted in the closed laboratory facility: environment temperature (22 ± 3)°C and humidity < 70%.

Calibration Equipment used (M&TE critical for calibration)

| Primary Standards | ID | Cal Date (Certificate No.) | Scheduled Calibration |
|---|---|---|---|
| Power meter E4419B | GB41293874 | 04-Apr-13 (No. 217-01733) | Apr-14 |
| Power sensor E4412A | MY41498087 | 04-Apr-13 (No. 217-01733) | Apr-14 |
| Reference 3 dB Attenuator | SN: S5054 (3c) | 04-Apr-13 (No. 217-01737) | Apr-14 |
| Reference 20 dB Attenuator | SN: S5277 (20x) | 04-Apr-13 (No. 217-01735) | Apr-14 |
| Reference 30 dB Attenuator | SN: S5129 (30b) | 04-Apr-13 (No. 217-01738) | Apr-14 |
| Reference Probe ES3DV2 | SN: 3013 | 28-Dec-12 (No. ES3-3013_Dec12) | Dec-13 |
| DAE4 | SN: 660 | 13-Dec-13 (No. DAE4-660_Dec13) | Dec-14 |
| | | | |
| **Secondary Standards** | **ID** | **Check Date (in house)** | **Scheduled Check** |
| RF generator HP 8648C | US3642U01700 | 4-Aug-99 (in house check Apr-13) | In house check: Apr-15 |
| Network Analyzer HP 8753E | US37390585 | 18-Oct-01 (in house check Oct-13) | In house check: Oct-14 |

| | Name | Function | Signature |
|---|---|---|---|
| Calibrated by: | Jeton Kastrati | Laboratory Technician | |
| Approved by: | Katja Pokovic | Technical Manager | |

Issued: December 14, 2013

This calibration certificate shall not be reproduced except in full without written approval of the laboratory.

**Calibration Laboratory of**
Schmid & Partner
Engineering AG
**Zeughausstrasse 43, 8004 Zurich, Switzerland**

**S** Schweizerischer Kalibrierdienst
**C** Service suisse d'étalonnage
Servizio svizzero di taratura
**S** Swiss Calibration Service

Accredited by the Swiss Accreditation Service (SAS)
**The Swiss Accreditation Service is one of the signatories to the EA Multilateral Agreement for the recognition of calibration certificates**

**Accreditation No.: SCS 108**

## Glossary:

| | |
|---|---|
| TSL | tissue simulating liquid |
| NORMx,y,z | sensitivity in free space |
| ConvF | sensitivity in TSL / NORMx,y,z |
| DCP | diode compression point |
| CF | crest factor (1/duty_cycle) of the RF signal |
| A, B, C, D | modulation dependent linearization parameters |
| Polarization φ | φ rotation around probe axis |
| Polarization ϑ | ϑ rotation around an axis that is in the plane normal to probe axis (at measurement center), i.e., ϑ = 0 is normal to probe axis |
| Connector Angle | information used in DASY system to align probe sensor X to the robot coordinate system |

## Calibration is Performed According to the Following Standards:

a) IEEE Std 1528-2013, "IEEE Recommended Practice for Determining the Peak Spatial-Averaged Specific Absorption Rate (SAR) in the Human Head from Wireless Communications Devices: Measurement Techniques", June 2013
b) IEC 62209-1, "Procedure to measure the Specific Absorption Rate (SAR) for hand-held devices used in close proximity to the ear (frequency range of 300 MHz to 3 GHz)", February 2005

## Methods Applied and Interpretation of Parameters:

- *NORMx,y,z:* Assessed for E-field polarization ϑ = 0 (f ≤ 900 MHz in TEM-cell; f > 1800 MHz: R22 waveguide). NORMx,y,z are only intermediate values, i.e., the uncertainties of NORMx,y,z does not affect the $E^2$-field uncertainty inside TSL (see below *ConvF*).
- *NORM(f)x,y,z = NORMx,y,z * frequency_response* (see Frequency Response Chart). This linearization is implemented in DASY4 software versions later than 4.2. The uncertainty of the frequency response is included in the stated uncertainty of *ConvF*.
- *DCPx,y,z:* DCP are numerical linearization parameters assessed based on the data of power sweep with CW signal (no uncertainty required). DCP does not depend on frequency nor media.
- *PAR:* PAR is the Peak to Average Ratio that is not calibrated but determined based on the signal characteristics
- *Ax,y,z; Bx,y,z; Cx,y,z; Dx,y,z; VRx,y,z: A, B, C, D* are numerical linearization parameters assessed based on the data of power sweep for specific modulation signal. The parameters do not depend on frequency nor media. *VR* is the maximum calibration range expressed in RMS voltage across the diode.
- *ConvF and Boundary Effect Parameters:* Assessed in flat phantom using E-field (or Temperature Transfer Standard for f ≤ 800 MHz) and inside waveguide using analytical field distributions based on power measurements for f > 800 MHz. The same setups are used for assessment of the parameters applied for boundary compensation (alpha, depth) of which typical uncertainty values are given. These parameters are used in DASY4 software to improve probe accuracy close to the boundary. The sensitivity in TSL corresponds to *NORMx,y,z * ConvF* whereby the uncertainty corresponds to that given for *ConvF*. A frequency dependent *ConvF* is used in DASY version 4.4 and higher which allows extending the validity from ± 50 MHz to ± 100 MHz.
- *Spherical isotropy (3D deviation from isotropy)*: in a field of low gradients realized using a flat phantom exposed by a patch antenna.
- *Sensor Offset*: The sensor offset corresponds to the offset of virtual measurement center from the probe tip (on probe axis). No tolerance required.
- *Connector Angle*: The angle is assessed using the information gained by determining the *NORMx* (no uncertainty required).

# Probe EX3DV4

## SN:3825

Manufactured: September 6, 2011
Calibrated: December 13, 2013

Calibrated for DASY/EASY Systems
(Note: non-compatible with DASY2 system!)

# DASY/EASY - Parameters of Probe: EX3DV4 - SN:3825

## Basic Calibration Parameters

| | Sensor X | Sensor Y | Sensor Z | Unc (k=2) |
|---|---|---|---|---|
| Norm (μV/(V/m)$^2$)[A] | 0.43 | 0.39 | 0.43 | ± 10.1 % |
| DCP (mV)[B] | 100.5 | 105.0 | 99.0 | |

## Modulation Calibration Parameters

| UID | Communication System Name | | A dB | B dB√μV | C | D dB | VR mV | Unc[E] (k=2) |
|---|---|---|---|---|---|---|---|---|
| 0 | CW | X | 0.0 | 0.0 | 1.0 | 0.00 | 198.2 | ±2.2 % |
| | | Y | 0.0 | 0.0 | 1.0 | | 196.8 | |
| | | Z | 0.0 | 0.0 | 1.0 | | 147.6 | |

The reported uncertainty of measurement is stated as the standard uncertainty of measurement multiplied by the coverage factor k=2, which for a normal distribution corresponds to a coverage probability of approximately 95%.

[A] The uncertainties of NormX,Y,Z do not affect the $E^2$-field uncertainty inside TSL (see Pages 5 and 6).
[B] Numerical linearization parameter: uncertainty not required.
[E] Uncertainty is determined using the max. deviation from linear response applying rectangular distribution and is expressed for the square of the field value.

# DASY/EASY - Parameters of Probe: EX3DV4 - SN:3825

## Calibration Parameter Determined in Head Tissue Simulating Media

| f (MHz) [C] | Relative Permittivity [F] | Conductivity (S/m) [F] | ConvF X | ConvF Y | ConvF Z | Alpha [G] | Depth [G] (mm) | Unct. (k=2) |
|---|---|---|---|---|---|---|---|---|
| 750 | 41.9 | 0.89 | 9.84 | 9.84 | 9.84 | 0.27 | 0.95 | ± 12.0 % |
| 835 | 41.5 | 0.90 | 9.58 | 9.58 | 9.58 | 0.29 | 0.97 | ± 12.0 % |
| 900 | 41.5 | 0.97 | 9.44 | 9.44 | 9.44 | 0.80 | 0.50 | ± 12.0 % |
| 1750 | 40.1 | 1.37 | 8.13 | 8.13 | 8.13 | 0.42 | 0.74 | ± 12.0 % |
| 1810 | 40.0 | 1.40 | 7.90 | 7.90 | 7.90 | 0.75 | 0.56 | ± 12.0 % |
| 1900 | 40.0 | 1.40 | 7.93 | 7.93 | 7.93 | 0.79 | 0.57 | ± 12.0 % |
| 2000 | 40.0 | 1.40 | 7.94 | 7.94 | 7.94 | 0.56 | 0.65 | ± 12.0 % |
| 2450 | 39.2 | 1.80 | 7.25 | 7.25 | 7.25 | 0.39 | 0.76 | ± 12.0 % |
| 2600 | 39.0 | 1.96 | 7.06 | 7.06 | 7.06 | 0.45 | 0.75 | ± 12.0 % |
| 5200 | 36.0 | 4.66 | 5.17 | 5.17 | 5.17 | 0.35 | 1.80 | ± 13.1 % |
| 5300 | 35.9 | 4.76 | 4.87 | 4.87 | 4.87 | 0.40 | 1.80 | ± 13.1 % |
| 5500 | 35.6 | 4.96 | 4.82 | 4.82 | 4.82 | 0.40 | 1.80 | ± 13.1 % |
| 5600 | 35.5 | 5.07 | 4.61 | 4.61 | 4.61 | 0.40 | 1.80 | ± 13.1 % |
| 5800 | 35.3 | 5.27 | 4.57 | 4.57 | 4.57 | 0.40 | 1.80 | ± 13.1 % |

[C] Frequency validity of ± 100 MHz only applies for DASY v4.4 and higher (see Page 2), else it is restricted to ± 50 MHz. The uncertainty is the RSS of the ConvF uncertainty at calibration frequency and the uncertainty for the indicated frequency band.
[F] At frequencies below 3 GHz, the validity of tissue parameters (ε and σ) can be relaxed to ± 10% if liquid compensation formula is applied to measured SAR values. At frequencies above 3 GHz, the validity of tissue parameters (ε and σ) is restricted to ± 5%. The uncertainty is the RSS of the ConvF uncertainty for indicated target tissue parameters.
[G] Alpha/Depth are determined during calibration. SPEAG warrants that the remaining deviation due to the boundary effect after compensation is always less than ± 1% for frequencies below 3 GHz and below ± 2% for frequencies between 3-6 GHz at any distance larger than half the probe tip diameter from the boundary.

# DASY/EASY - Parameters of Probe: EX3DV4 - SN:3825

## Calibration Parameter Determined in Body Tissue Simulating Media

| f (MHz) [C] | Relative Permittivity [F] | Conductivity (S/m) [F] | ConvF X | ConvF Y | ConvF Z | Alpha [G] | Depth [G] (mm) | Unct. (k=2) |
|---|---|---|---|---|---|---|---|---|
| 750 | 55.5 | 0.96 | 9.44 | 9.44 | 9.44 | 0.80 | 0.61 | ± 12.0 % |
| 835 | 55.2 | 0.97 | 9.41 | 9.41 | 9.41 | 0.42 | 0.86 | ± 12.0 % |
| 900 | 55.0 | 1.05 | 9.23 | 9.23 | 9.23 | 0.62 | 0.67 | ± 12.0 % |
| 1750 | 53.4 | 1.49 | 7.86 | 7.86 | 7.86 | 0.46 | 0.69 | ± 12.0 % |
| 1810 | 53.3 | 1.52 | 7.77 | 7.77 | 7.77 | 0.48 | 0.71 | ± 12.0 % |
| 1900 | 53.3 | 1.52 | 7.66 | 7.66 | 7.66 | 0.49 | 0.72 | ± 12.0 % |
| 2000 | 53.3 | 1.52 | 7.83 | 7.83 | 7.83 | 0.27 | 0.97 | ± 12.0 % |
| 2450 | 52.7 | 1.95 | 7.23 | 7.23 | 7.23 | 0.79 | 0.55 | ± 12.0 % |
| 2600 | 52.5 | 2.16 | 7.02 | 7.02 | 7.02 | 0.80 | 0.50 | ± 12.0 % |
| 5200 | 49.0 | 5.30 | 4.38 | 4.38 | 4.38 | 0.50 | 1.90 | ± 13.1 % |
| 5300 | 48.9 | 5.42 | 4.23 | 4.23 | 4.23 | 0.50 | 1.90 | ± 13.1 % |
| 5500 | 48.6 | 5.65 | 3.92 | 3.92 | 3.92 | 0.50 | 1.90 | ± 13.1 % |
| 5600 | 48.5 | 5.77 | 3.90 | 3.90 | 3.90 | 0.50 | 1.90 | ± 13.1 % |
| 5800 | 48.2 | 6.00 | 4.05 | 4.05 | 4.05 | 0.50 | 1.90 | ± 13.1 % |

[C] Frequency validity of ± 100 MHz only applies for DASY v4.4 and higher (see Page 2), else it is restricted to ± 50 MHz. The uncertainty is the RSS of the ConvF uncertainty at calibration frequency and the uncertainty for the indicated frequency band.
[F] At frequencies below 3 GHz, the validity of tissue parameters (ε and σ) can be relaxed to ± 10% if liquid compensation formula is applied to measured SAR values. At frequencies above 3 GHz, the validity of tissue parameters (ε and σ) is restricted to ± 5%. The uncertainty is the RSS of the ConvF uncertainty for indicated target tissue parameters.
[G] Alpha/Depth are determined during calibration. SPEAG warrants that the remaining deviation due to the boundary effect after compensation is always less than ± 1% for frequencies below 3 GHz and below ± 2% for frequencies between 3-6 GHz at any distance larger than half the probe tip diameter from the boundary.

EX3DV4– SN:3825 December 13, 2013

# Frequency Response of E-Field

(TEM-Cell:ifi110 EXX, Waveguide: R22)

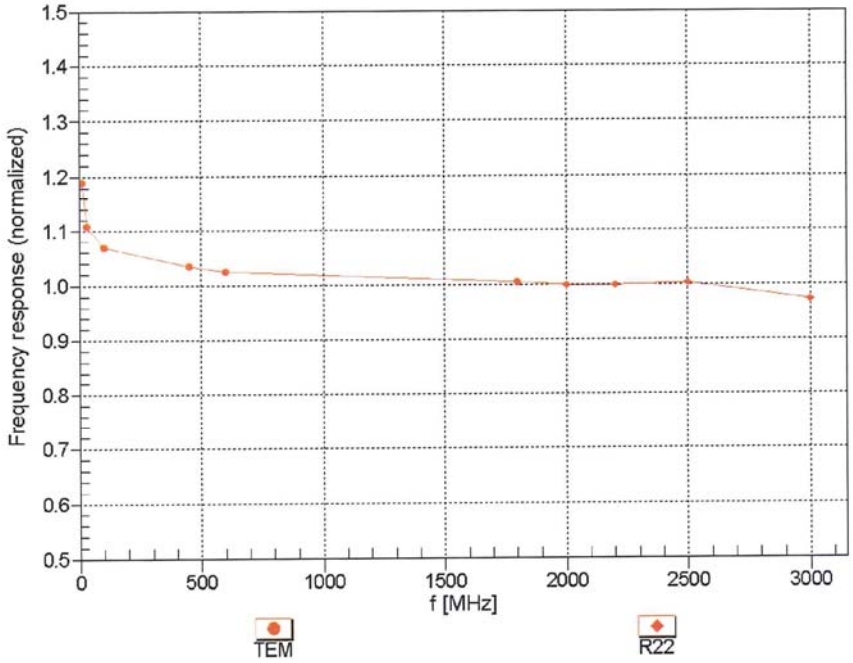


Uncertainty of Frequency Response of E-field: ± 6.3% (k=2)



**UL Japan, Inc.**
**Ise HQ EMC Lab.**
4383-326 Asama-cho, Ise-shi, Mie-ken 516-0021 JAPAN
Telephone: +81 596 24 8999
Facsimile: +81 596 24 8124

EX3DV4– SN:3825 December 13, 2013

## Receiving Pattern (ϕ), ϑ = 0°

f=600 MHz,TEM

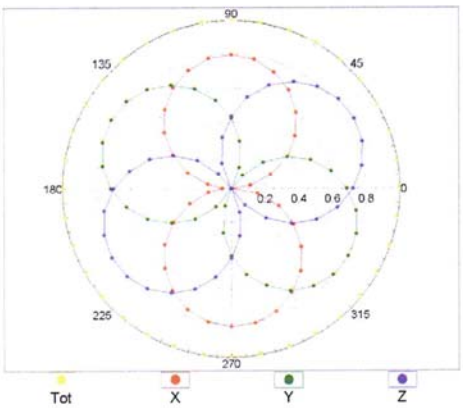


f=1800 MHz,R22

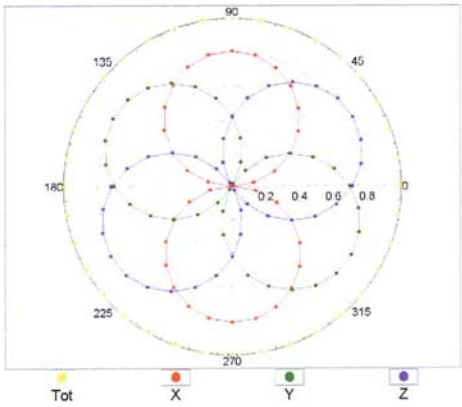


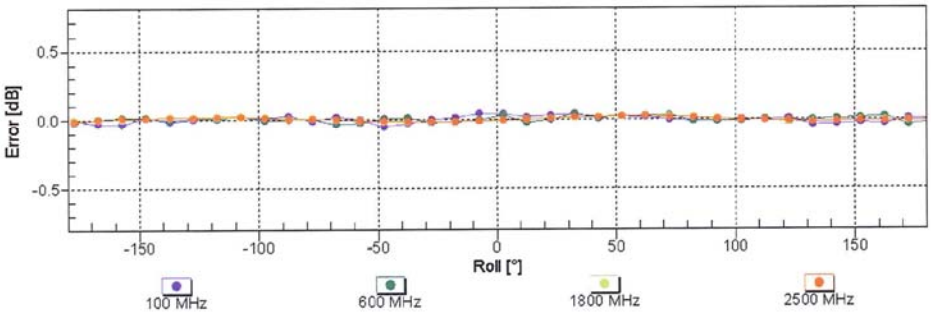


**Uncertainty of Axial Isotropy Assessment: ± 0.5% (k=2)**



**UL Japan, Inc.**
**Ise HQ EMC Lab.**
4383-326 Asama-cho, Ise-shi, Mie-ken 516-0021 JAPAN
Telephone: +81 596 24 8999
Facsimile: +81 596 24 8124

EX3DV4– SN:3825 December 13, 2013

## Dynamic Range f(SAR$_{head}$)
(TEM cell , f = 900 MHz)

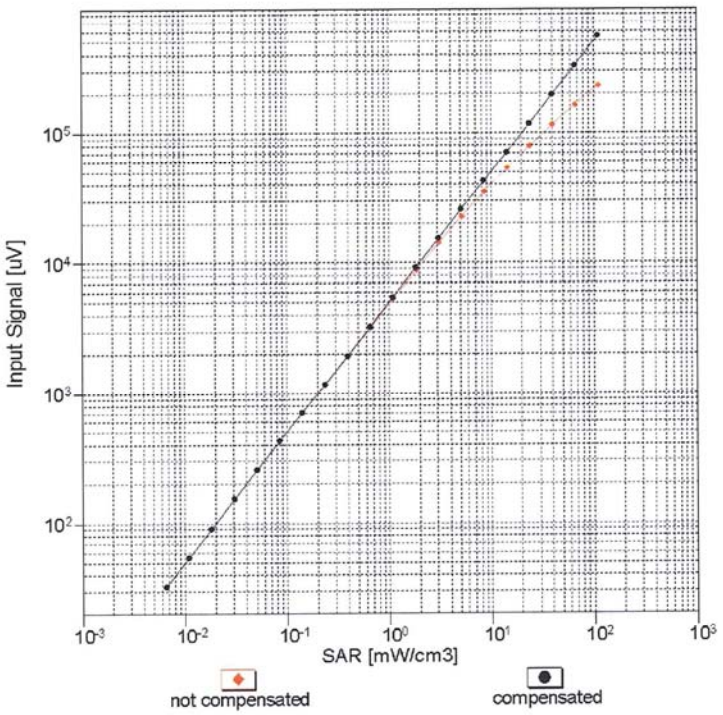


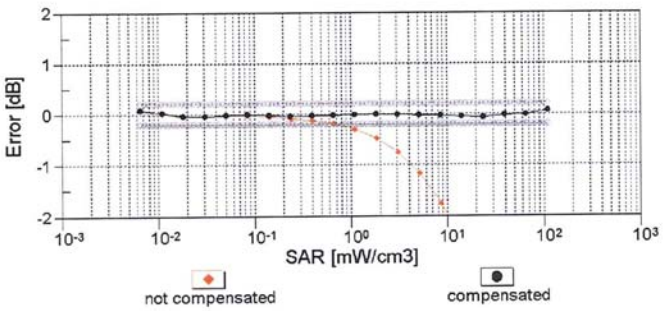


**Uncertainty of Linearity Assessment: ± 0.6% (k=2)**

EX3DV4– SN:3825 December 13, 2013

## Conversion Factor Assessment

f = 900 MHz,WGLS R9 (H_convF)

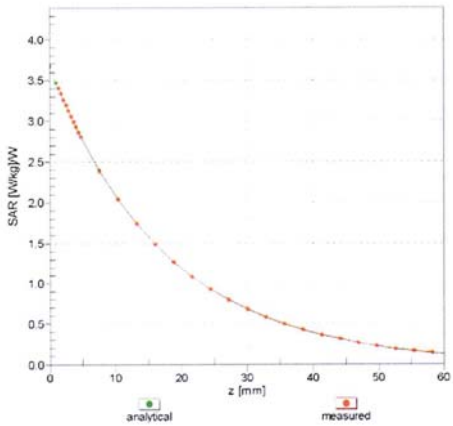


f = 1750 MHz,WGLS R22 (H_convF)

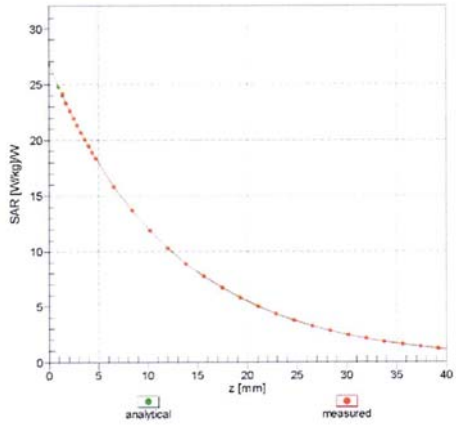


## Deviation from Isotropy in Liquid

**Error (ϕ, ϑ), f = 900 MHz**

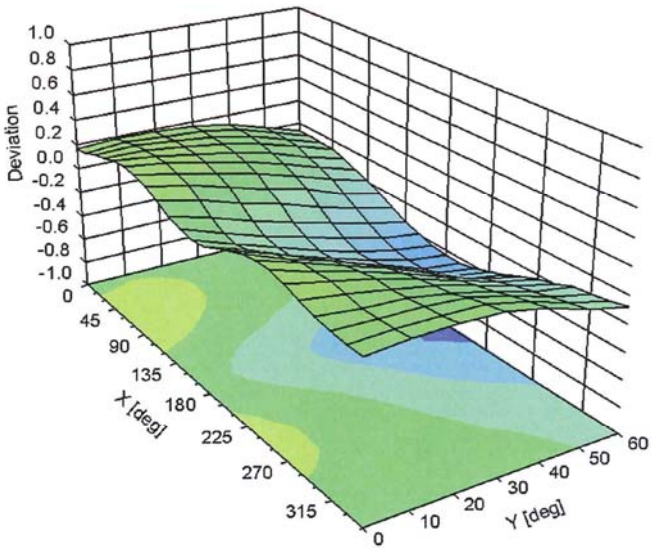


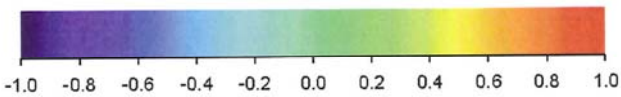


**Uncertainty of Spherical Isotropy Assessment: ± 2.6% (k=2)**

# DASY/EASY - Parameters of Probe: EX3DV4 - SN:3825

## Other Probe Parameters

| | |
|---|---|
| Sensor Arrangement | Triangular |
| Connector Angle (°) | -27.5 |
| Mechanical Surface Detection Mode | enabled |
| Optical Surface Detection Mode | disabled |
| Probe Overall Length | 337 mm |
| Probe Body Diameter | 10 mm |
| Tip Length | 9 mm |
| Tip Diameter | 2.5 mm |
| Probe Tip to Sensor X Calibration Point | 1 mm |
| Probe Tip to Sensor Y Calibration Point | 1 mm |
| Probe Tip to Sensor Z Calibration Point | 1 mm |
| Recommended Measurement Distance from Surface | 2 mm |