# TEST REPORT

| | |
|---|---|
| Applicant Name : | Porta Phone Company Inc |
| Address : | 145 Dean Knauss Drive Narragansett, Rhode Island 02882 United States |
| Report Number : | RA221230-64557E-SAA |
| FCC ID: | B4H-EVXCBS |

**Test Standard (s)**
FCC Part 2.1093

**Sample Description**

| | |
|---|---|
| Product Type: | 2.4 GHz Base Station Conference Module |
| Model No.: | EVX-CMod |
| Multiple Model(s) No.: | N/A |
| Trade Mark: | EVADE Conference Module |
| Date Received: | 2023/02/07 |
| Test Date: | 2023/04/07 |
| Report Date: | 2023/04/10 |

| | |
|---|---|
| Test Result: | Pass* |

* In the configuration tested, the EUT complied with the standards above.

**Prepared and Checked By:**

Lance Li
EMC Engineer

**Approved By:**

Candy Li
EMC Engineer

Note: This report may contain data that are not covered by the A2LA accreditation and are marked with an asterisk "★".
Shenzhen Accurate Technology Co., Ltd. is not responsible for the authenticity of any test data provided by the applicant. Data included from the applicant that may affect test results are marked with an asterisk '*'. Customer model name, addresses, names, trademarks etc. are not considered data.
This report cannot be reproduced except in full, without prior written approval of the Company. Unless otherwise stated the results shown in this test report refer only to the sample(s) tested. This report is valid only with a valid digital signature. The digital signature may be available only under the Adobe software above version 7.0.

**Shenzhen Accurate Technology Co., Ltd.**
1/F., Building A, Changyuan New Material Port, Science & Industry Park, Nanshan District, Shenzhen, Guangdong, P.R. China
Tel: +86 755-26503290 Fax: +86 755-26503396 Web: www.atc-lab.com

| Attestation of Test Results | | | |
|---|---|---|---|
| **MODE** | | **Max. SAR Level(s) Reported(W/kg)** | **Limit (W/kg)** |
| **2.4GHz FHSS** | 1g Body SAR | 0.01 | 1.6 |
| **Applicable Standards** | **FCC 47 CFR part 2.1093**<br>Radiofrequency radiation exposure evaluation: portable devices | | |
| | **RF Exposure Procedures: TCB Workshop** | | |
| | **IEEE1528:2013**<br>IEEE Recommended Practice for Determining the Peak Spatial-Average Specific Absorption Rate (SAR) in the Human Head from Wireless Communications Devices: Measurement Techniques | | |
| | **IEC 62209-1:2016**<br>Measurement procedure for the assessment of specific absorption rate of human exposure to radio frequency fields from hand-held and body-mounted wireless communication devices – Part 1: Devices used next to the ear (Frequency range of 300 MHz to 6 GHz) | | |
| | **KDB procedures**<br>KDB 447498 D04 Interim General RF Exposure Guidance v01<br>KDB 865664 D01 SAR Measurement 100 MHz to 6 GHz v01r04<br>KDB 865664 D02 RF Exposure Reporting v01r02 | | |
| **Note:** This wireless device has been shown to be capable of compliance for localized specific absorption rate (SAR) for General Population/Uncontrolled Exposure limits specified in **FCC 47 CFR part 2.1093** and has been tested in accordance with the measurement procedures specified in IEEE 1528-2013 and RF exposure KDB procedures.<br>**The results and statements contained in this report pertain only to the device(s) evaluated.** | | | |

# TABLE OF CONTENTS

**DOCUMENT REVISION HISTORY** ..... **4**
**EUT DESCRIPTION** ..... **5**
TECHNICAL SPECIFICATION ..... 5
**REFERENCE, STANDARDS, AND GUIDELINES** ..... **6**
FCC: ..... 6
SAR LIMITS ..... 6
**FACILITIES** ..... **7**
**DESCRIPTION OF TEST SYSTEM** ..... **8**
**EQUIPMENT LIST AND CALIBRATION** ..... **14**
EQUIPMENTS LIST & CALIBRATION INFORMATION ..... 14
**SAR MEASUREMENT SYSTEM VERIFICATION** ..... **15**
LIQUID VERIFICATION ..... 15
SYSTEM ACCURACY VERIFICATION ..... 16
SAR SYSTEM VALIDATION DATA ..... 17
**EUT TEST STRATEGY AND METHODOLOGY** ..... **18**
TEST POSITIONS FOR BODY-WORN AND OTHER CONFIGURATIONS ..... 18
TEST DISTANCE FOR SAR EVALUATION ..... 18
SAR EVALUATION PROCEDURE ..... 19
**CONDUCTED OUTPUT POWER MEASUREMENT** ..... **20**
TEST PROCEDURE ..... 20
MAXIMUM TARGET OUTPUT POWER ..... 20
DUTY CYCLE ..... 20
**STANDALONE SAR TEST EXCLUSION CONSIDERATIONS** ..... **21**
ANTENNA DISTANCE TO EDGE ..... 21
STANDALONE SAR TEST EXCLUSION CONSIDERATIONS ..... 22
**SAR MEASUREMENT RESULTS** ..... **24**
SAR TEST DATA ..... 24
**SAR MEASUREMENT VARIABILITY** ..... **25**
**SAR SIMULTANEOUS TRANSMISSION DESCRIPTION** ..... **26**
**SAR PLOTS** ..... **27**
**APPENDIX A MEASUREMENT UNCERTAINTY** ..... **29**
**APPENDIX B EUT TEST POSITION PHOTOS** ..... **30**
LIQUID DEPTH ≥ 15CM ..... 30
BACK TO PHANTOM WITH BELT CLIP(0MM) ..... 30
**APPENDIX C PROBE CALIBRATION CERTIFICATES** ..... **31**

# DOCUMENT REVISION HISTORY

| Revision Number | Report Number | Description of Revision | Date of Revision |
|---|---|---|---|
| 0 | RA221230-64557E-SAA | Original Report | 2023/02/21 |
| 1 | RA221230-64557E-SAA | Add belt clip and retest | 2023/04/10 |

# EUT DESCRIPTION

This report has been prepared on behalf of ***Porta Phone Company Inc*** and their product ***2.4 GHz Base Station Conference Module*** , Model: ***EVX-CMod***, FCC ID: ***B4H-EVXCBS*** or the EUT (Equipment under Test) as referred to in the rest of this report.

## Technical Specification

| | |
|---|---|
| **Device Type:** | Portable |
| **Exposure Category:** | Population / Uncontrolled |
| **Antenna Type(s):** | Internal Antenna |
| **Operation Mode :** | GFSK |
| **Frequency Band:** | 2.4GHz FHSS: 2407-2475 MHz |
| **Power Source:** | Rechargeable Battery |
| **Normal Operation:** | Body-worn |

# REFERENCE, STANDARDS, AND GUIDELINES

## FCC:

The Report and Order requires routine SAR evaluation prior to equipment authorization of portable transmitter devices, including portable telephones. For consumer products, the applicable limit is 1.6 mW/g as recommended by the ANSI/IEEE standard C95.1-1992 [6] for an uncontrolled environment (Paragraph 65). According to the Supplement C of OET Bulletin 65 “Evaluating Compliance with FCC Guide-lines for Human Exposure to Radio frequency Electromagnetic Fields", released on Jun 29, 2001 by the FCC, the device should be evaluated at maximum output power (radiated from the antenna) under “worst-case” conditions for normal or intended use, incorporating normal antenna operating positions, device peak performance frequencies and positions for maximum RF energy coupling.

This report describes the methodology and results of experiments performed on wireless data terminal. The objective was to determine if there is RF radiation and if radiation is found, what is the extent of radiation with respect to safety limits. SAR (Specific Absorption Rate) is the measure of RF exposure determined by the amount of RF energy absorbed by human body (or its parts) – to determine how the RF energy couples to the body or head which is a primary health concern for body worn devices. The limit below which the exposure to RF is considered safe by regulatory bodies in North America is 1.6 mW/g average over 1 gram of tissue mass.

## SAR Limits

**FCC Limit**(1g Tissue)

| EXPOSURE LIMITS | SAR (W/kg) | |
|---|---|---|
| | (General Population / Uncontrolled Exposure Environment) | (Occupational / Controlled Exposure Environment) |
| Spatial Average (averaged over the whole body) | 0.08 | 0.4 |
| Spatial Peak (averaged over any 1 g of tissue) | **1.60** | 8.0 |
| Spatial Peak (hands/wrists/feet/ankles averaged over 10 g) | **4.0** | 20.0 |

Population/Uncontrolled Environments are defined as locations where there is the exposure of individual who have no knowledge or control of their exposure.

Occupational/Controlled Environments are defined as locations where there is exposure that may be incurred by people who are aware of the potential for exposure (i.e. as a result of employment or occupation).

General Population/Uncontrolled environments Spatial Peak limit 1.6W/kg (FCC) applied to the EUT.

# FACILITIES

The test site used by Shenzhen Accurate Technology Co., Ltd. to collect test data is located on the Floor 1, KuMaKe Building, Dongzhou Community, Guangming Street, Guangming District, Shenzhen, Guangdong, China.

The test site has been approved by the FCC under the KDB 974614 D01 and is listed in the FCC Public Access Link (PAL) database, FCC Registration No.: 708358, the FCC Designation No.: CN1189.

Accredited by American Association for Laboratory Accreditation (A2LA) The Certificate Number is 4297.01.

Listed by Innovation, Science and Economic Development Canada (ISEDC), the Registration Number is 30241.

# DESCRIPTION OF TEST SYSTEM

These measurements were performed with the automated near-field scanning system DASY5 from Schmid & Partner Engineering AG (SPEAG) which is the Fifth generation of the system shown in the figure hereinafter:

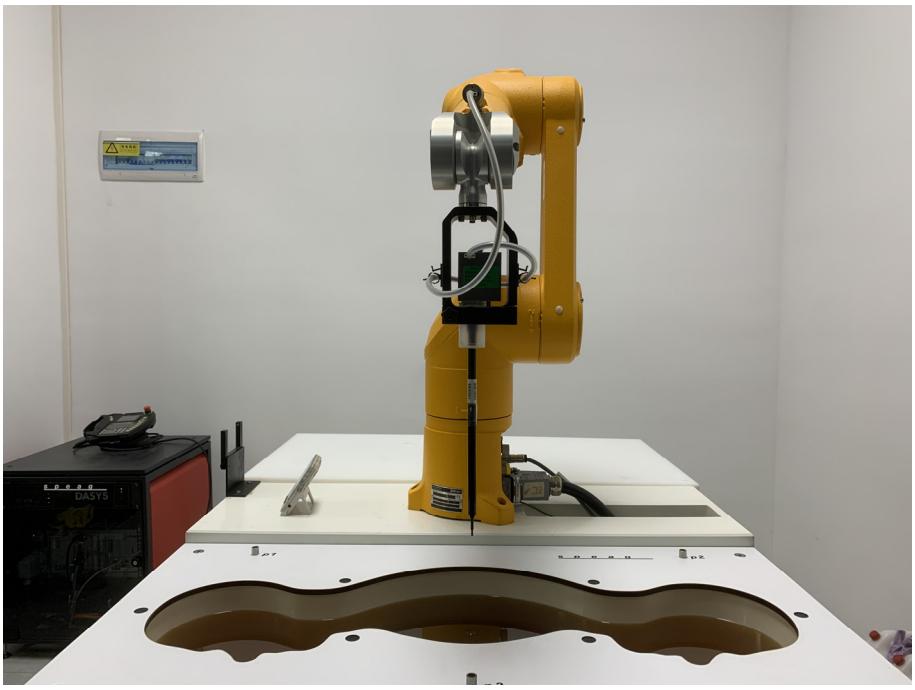

## DASY5 System Description

The DASY5 system for performing compliance tests consists of the following items:

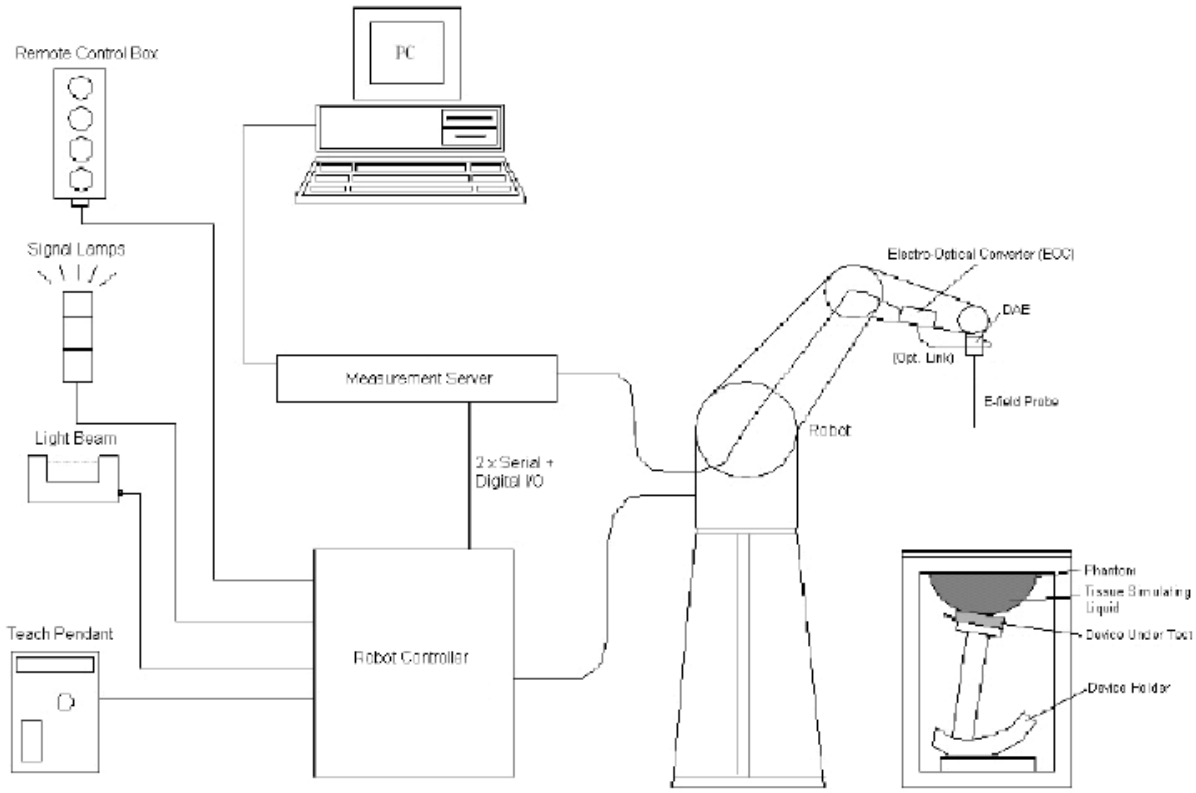

- A standard high precision 6-axis robot (Staubli TX=RX family) with controller, teach pendant and software. An arm extension for accommodating the data acquisition electronics (DAE).
- An isotropic field probe optimized and calibrated for the targeted measurement.
- A data acquisition electronics (DAE) which performs the signal application, signal multiplexing, AD-conversion, offset measurements, mechanical surface detection, collision detection, etc. The unit is battery powered with standard or rechargeable batteries. The signal is optically transmitted to the EOC.
- The Electro-optical converter (EOC) performs the conversion from optical to electrical signals for the digital communication to the DAE. To use optical surface detection, a special version of the EOC is required. The EOC signal is transmitted to the measurement server.
- The function of the measurement server is to perform the time critical tasks such as signal filtering, control of the robot operation and fast movement interrupts.
- The Light Beam used is for probe alignment. This improves the (absolute) accuracy of the probe positioning.
- A computer running Win7 professional operating system and the DASY52 software.
- Remote control and teach pendant as well as additional circuitry for robot safety such as warning lamps, etc.
- The phantom, the device holder and other accessories according to the targeted measurement.

**DASY5 Measurement Server**

The DASY5 measurement server is based on a PC/104 CPU board with a 400 MHz Intel ULV Celeron, 128 MB chip-disk and 128 MB RAM. The necessary circuits for communication with the DAE4 (or DAE3) electronics box, as well as the 16-bit AD converter system for optical detection and digital I/O interface are contained on the DASY6 I/O board, which is directly connected to the PC/104 bus of the CPU board.

The measurement server performs all real-time data evaluations of field measurements and surface detection, controls robot movements, and handles safety operations. The PC operating system cannot interfere with these time-critical processes. All connections are supervised by a watchdog, and disconnection of any of the cables to the measurement server will automatically disarm the robot and disable all program- controlled robot movements. Furthermore, the measurement server is equipped with an expansion port, which is reserved for future applications. Please note that this expansion port does not have a standardized pinout, and therefore only devices provided by SPEAG can be connected. Connection of devices from any other supplier could seriously damage the measurement server.

**Data Acquisition Electronics**

The data acquisition electronics (DAE4) consist of a highly sensitive electrometer-grade preamplifier with auto-zeroing, a channel and gain-switching multiplexer, a fast 16 bit AD-converter and a command decoder with a control logic unit. Transmission to the measurement server is accomplished through an optical downlink for data and status information, as well as an optical uplink for commands and the clock.

The mechanical probe mounting device includes two different sensor systems for frontal and sideways probe contacts. They are used for mechanical surface detection and probe collision detection.

The input impedance of both the DAE4 as well as of the DAE3 box is 200MOhm; the inputs are symmetrical and floating. Common mode rejection is above 80 dB.

**EX3DV4 E-Field Probes**

| | |
|---|---|
| **Frequency** | 10 MHz to > 6 GHz<br>Linearity: ± 0.2 dB (30 MHz to 6 GHz) |
| **Directivity** | ± 0.3 dB in TSL (rotation around probe axis)<br>± 0.5 dB in TSL (rotation normal to probe axis) |
| **Dynamic Range** | 10 µW/g to > 100 mW/g<br>Linearity: ± 0.2 dB (noise: typically < 1 µW/g) |
| **Dimensions** | Overall length: 337 mm (Tip: 20 mm)<br>Tip diameter: 2.5 mm (Body: 12 mm)<br>Typical distance from probe tip to dipole centers: 1 mm |
| **Application** | High precision dosimetric measurements in any exposure scenario (e.g., very strong gradient fields); the only probe that enables compliance testing for frequencies up to 6 GHz with precision of better 30%. |
| **Compatibility** | DASY3, DASY4, DASY52 SAR and higher, EASY4/MRI |

**SAM Twin Phantom**

The SAM Twin Phantom (shown in front of DASY5) is a fiberglass shell phantom with shell thickness 2 mm, except in the ear region where the thickness is increased to 6 mm..

When the phantom is mounted inside allocated slot of the DASY5 platform, phantom reference points can be taught directly in the DASY5 V5.2 software. When the DASY5 platform is used to mount the

Phantom, some of the phantom teaching points cannot be reached by the robot in DASY5 V5.2. A special tool called P1a-P2aX-Former is provided to transform two of the three points, P1 and P2, to reachable locations. To use these new teaching points, a revised phantom configuration file is required.
In addition to our standard broadband liquids, the phantom can be used with the following tissue simulating liquids:

Sugar-water-based liquids can be left permanently in the phantom. Always cover the liquid when the system is not in use to prevent changes in liquid parameters due to water evaporation.
DGBE-based liquids should be used with care. As DGBE is a softener for most plastics, the liquid should be taken out of the phantom, and the phantom should be dried when the system is not in use (desirable at least once a week).

Do not use other organic solvents without previously testing the solvent resistivity of the phantom.
Approximately 25 liters of liquid is required to fill the SAM Twin phantom.

**Calibration Frequency Points for EX3DV4 E-Field Probes SN: 7441 Calibrated: 2022/05/16**

| Calibration Frequency Point(MHz) | Frequency Range(MHz) | | Conversion Factor | | |
|---|---|---|---|---|---|
| | From | To | X | Y | Z |
| 750 Head | 650 | 850 | 10.04 | 10.04 | 10.04 |
| 900 Head | 850 | 1000 | 9.61 | 9.61 | 9.61 |
| 1450 Head | 1350 | 1550 | 8.52 | 8.52 | 8.52 |
| 1750 Head | 1650 | 1850 | 8.32 | 8.32 | 8.32 |
| 1900 Head | 1850 | 1950 | 7.94 | 7.94 | 7.94 |
| 2000 Head | 1950 | 2100 | 7.99 | 7.99 | 7.99 |
| 2300 Head | 2200 | 2400 | 7.78 | 7.78 | 7.78 |
| 2450 Head | 2400 | 2550 | 7.54 | 7.54 | 7.54 |
| 2600 Head | 2550 | 2700 | 7.30 | 7.30 | 7.30 |
| 3300 Head | 3200 | 3400 | 7.09 | 7.09 | 7.09 |
| 3500 Head | 3400 | 3600 | 6.89 | 6.89 | 6.89 |
| 3700 Head | 3600 | 3800 | 6.55 | 6.55 | 6.55 |
| 3900 Head | 3800 | 4000 | 6.60 | 6.60 | 6.60 |
| 4400 Head | 4300 | 4500 | 6.34 | 6.34 | 6.34 |
| 4600 Head | 4500 | 4700 | 6.26 | 6.26 | 6.26 |
| 4800 Head | 4700 | 4900 | 6.16 | 6.16 | 6.16 |
| 4950 Head | 4900 | 5050 | 5.85 | 5.85 | 5.85 |
| 5250 Head | 5140 | 5360 | 5.35 | 5.35 | 5.35 |
| 5600 Head | 5490 | 5700 | 4.85 | 4.85 | 4.85 |
| 5750 Head | 5700 | 5860 | 4.83 | 4.83 | 4.83 |

**Area Scans**

| | ≤ 3 GHz | > 3 GHz |
|---|---|---|
| Maximum distance from closest measurement point (geometric center of probe sensors) to phantom surface | 5 mm ± 1 mm | ½·$\delta$·ln(2) mm ± 0.5 mm |
| Maximum probe angle from probe axis to phantom surface normal at the measurement location | 30° ± 1° | 20° ± 1° |
| Maximum area scan spatial resolution: $\Delta x_{Area}$, $\Delta y_{Area}$ | ≤ 2 GHz: ≤ 15 mm<br>2 – 3 GHz: ≤ 12 mm | 3 – 4 GHz: ≤ 12 mm<br>4 – 6 GHz: ≤ 10 mm |
| | When the x or y dimension of the test device, in the measurement plane orientation, is smaller than the above, the measurement resolution must be ≤ the corresponding x or y dimension of the test device with at least one measurement point on the test device. | |

**Zoom Scan (Cube Scan Averaging)**

| | | | | |
|---|---|---|---|---|
| Maximum zoom scan spatial resolution: $\Delta x_{Zoom}$, $\Delta y_{Zoom}$ | | | ≤ 2 GHz: ≤ 8 mm<br>2 – 3 GHz: ≤ 5 mm* | 3 – 4 GHz: ≤ 5 mm*<br>4 – 6 GHz: ≤ 4 mm* |
| Maximum zoom scan spatial resolution, normal to phantom surface | uniform grid: $\Delta z_{Zoom}(n)$ | | ≤ 5 mm | 3 – 4 GHz: ≤ 4 mm<br>4 – 5 GHz: ≤ 3 mm<br>5 – 6 GHz: ≤ 2 mm |
| | graded grid | $\Delta z_{Zoom}(1)$: between 1st two points closest to phantom surface | ≤ 4 mm | 3 – 4 GHz: ≤ 3 mm<br>4 – 5 GHz: ≤ 2.5 mm<br>5 – 6 GHz: ≤ 2 mm |
| | | $\Delta z_{Zoom}(n>1)$: between subsequent points | $\leq 1.5 \cdot \Delta z_{Zoom}(n-1)$ mm | |
| Minimum zoom scan volume | x, y, z | | ≥ 30 mm | 3 – 4 GHz: ≥ 28 mm<br>4 – 5 GHz: ≥ 25 mm<br>5 – 6 GHz: ≥ 22 mm |

Note: $\delta$ is the penetration depth of a plane-wave at normal incidence to the tissue medium; see IEEE Std 1528-2013 for details.

* When zoom scan is required and the *reported* SAR from the *area scan based 1-g SAR estimation* procedures of KDB Publication 447498 is ≤ 1.4 W/kg, ≤ 8 mm, ≤ 7 mm and ≤ 5 mm zoom scan resolution may be applied, respectively, for 2 GHz to 3 GHz, 3 GHz to 4 GHz and 4 GHz to 6 GHz.

## Tissue Dielectric Parameters for Head

The head tissue dielectric parameters recommended by the IEC 62209-1:2016

### Recommended Tissue Dielectric Parameters for Head

**Table A.3 – Dielectric properties of the head tissue-equivalent liquid**

| Frequency<br>MHz | Relative permittivity<br>$\varepsilon_r$ | Conductivity ($\sigma$)<br>S/m |
|---|---|---|
| 300 | 45,3 | 0,87 |
| 450 | 43,5 | 0,87 |
| *750* | *41,9* | *0,89* |
| 835 | 41,5 | 0,90 |
| 900 | 41,5 | 0,97 |
| 1 450 | 40,5 | 1,20 |
| *1 500* | *40,4* | *1,23* |
| *1 640* | *40,2* | *1,31* |
| *1 750* | *40,1* | *1,37* |
| 1 800 | 40,0 | 1,40 |
| 1 900 | 40,0 | 1,40 |
| 2 000 | 40,0 | 1,40 |
| *2 100* | *39,8* | *1,49* |
| *2 300* | *39,5* | *1,67* |
| 2 450 | 39,2 | 1,80 |
| *2 600* | *39,0* | *1,96* |
| 3 000 | 38,5 | 2,40 |
| *3 500* | *37,9* | *2,91* |
| *4 000* | *37,4* | *3,43* |
| *4 500* | *36,8* | *3,94* |
| *5 000* | *36,2* | *4,45* |
| *5 200* | *36,0* | *4,66* |
| *5 400* | *35,8* | *4,86* |
| *5 600* | *35,5* | *5,07* |
| *5 800* | *35,3* | *5,27* |
| *6 000* | *35,1* | *5,48* |

NOTE For convenience, permittivity and conductivity values at those frequencies which are not part of the original data provided by Drossos et al. [33] or the extension to 5 800 MHz are provided (i.e. the values shown *in italics*). These values were linearly interpolated between the values in this table that are immediately above and below these values, except the values at 6 000 MHz that were linearly extrapolated from the values at 3 000 MHz and 5 800 MHz.

# EQUIPMENT LIST AND CALIBRATION

## Equipments List & Calibration Information

| Equipment | Model | S/N | Calibration Date | Calibration Due Date |
|---|---|---|---|---|
| DASY5 Test Software | DASY52 52.10.4 | N/A | NCR | NCR |
| DASY5 Measurement Server | DASY5 6.0.31 | N/A | NCR | NCR |
| Data Acquisition Electronics | DAE4 | 1325 | 2022/08/29 | 2023/08/28 |
| E-Field Probe | EX3DV4 | 7441 | 2022/05/16 | 2023/05/15 |
| Mounting Device | MD4HHTV5 | SD 000 H01 KA | NCR | NCR |
| SAM Twin Phantom | SAM-Twin V5.0 | 1744 | NCR | NCR |
| Dipole,2450MHz | D2450V2 | 970 | 2021/06/28 | 2024/06/27 |
| Simulated Tissue Liquid Head | HBBL600-10000V6 | SL AAH U16 BC | Each Time | |
| Network Analyzer | 8753D | 3410A08288 | 2022/7/05 | 2023/7/04 |
| Dielectric Assessment Kit | DAK-3.5 | 1320 | NCR | NCR |
| Signal Generator | SMB100A | 108362 | 2022/12/13 | 2023/12/12 |
| USB wideband power sensor | U2021XA | MY52350001 | 2022/12/13 | 2023/12/12 |
| Power Amplifier | CBA 1G-070 | T44328 | 2022/12/13 | 2023/12/12 |
| Linear Power Amplifier | AS0860-40/45 | 1060913 | 2022/12/13 | 2023/12/12 |
| Directional Coupler | 4223-20 | 3.113.277 | 2022/12/13 | 2023/12/12 |
| 6dB Attenuator | 8493B 6dB Attenuator | 2708A 04769 | 2022/12/13 | 2023/12/12 |
| Spectrum Analyzer | FSV40 | 101949 | 2022/11/25 | 2023/11/24 |

# SAR MEASUREMENT SYSTEM VERIFICATION

## Liquid Verification

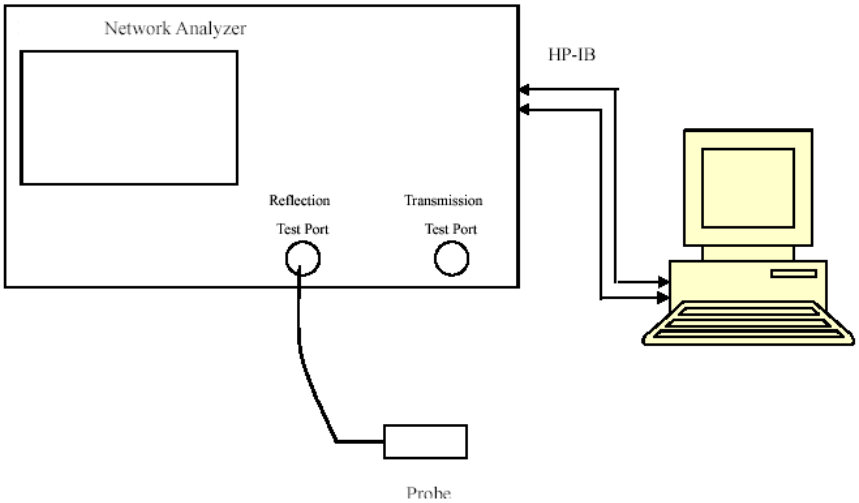


Liquid Verification Setup Block Diagram

### Liquid Verification Results

| Frequency (MHz) | Liquid Type | Liquid Parameter | | Target Value | | Delta (%) | | Tolerance (%) |
|---|---|---|---|---|---|---|---|---|
| | | $\varepsilon_r$ | O' (S/m) | $\varepsilon_r$ | O' (S/m) | $\Delta\varepsilon_r$ | ΔO' | |
| 2407 | Simulated Tissue Liquid Head | 41.151 | 1.787 | 39.28 | 1.76 | 4.76 | 1.53 | ±5 |
| 2450 | Simulated Tissue Liquid Head | 40.852 | 1.796 | 39.20 | 1.80 | 4.21 | -0.22 | ±5 |
| 2475 | Simulated Tissue Liquid Head | 40.125 | 1.811 | 39.16 | 1.82 | 2.46 | -0.49 | ±5 |

**Liquid Verification above was performed on 2023/04/07.*

## System Accuracy Verification

Prior to the assessment, the system validation kit was used to test whether the system was operating within its specifications of ±10%. The validation results are tabulated below. And also the corresponding SAR plot is attached as well in the SAR plots files.

The spacing distance*s* in the **System Verification Setup Block Diagram** is given by the following:

a) s = 15 mm ± 0.2 mm for 300 MHz ≤ f ≤ 1 000 MHz;

b) s = 10 mm ± 0.2 mm for 1 000 MHz < f ≤ 6 000 MHz;

c) s = 10 mm ± 0.1 mm for 6 000 MHz < f ≤ 10 000 MHz.

### System Verification Setup Block Diagram

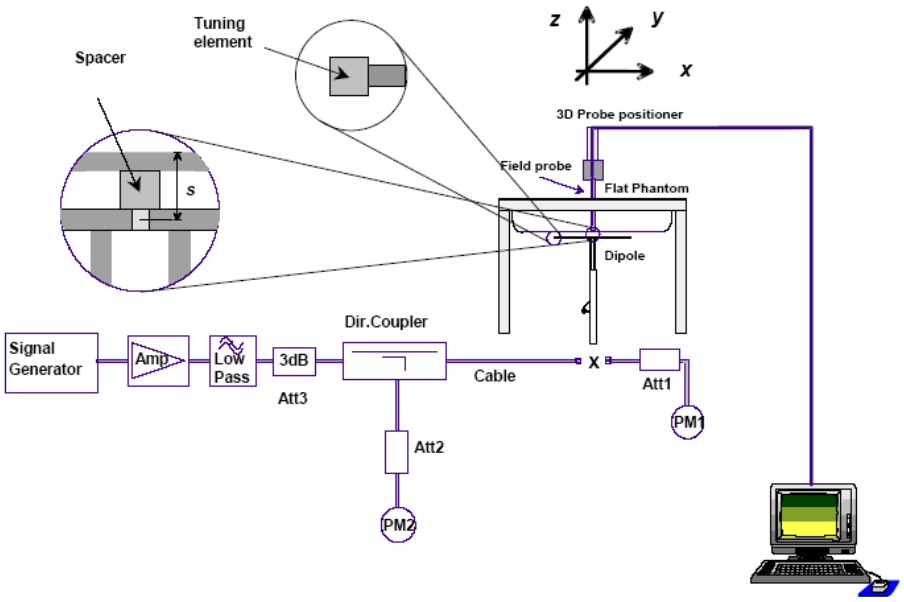


### System Accuracy Check Results

| Date | Frequency Band | Liquid Type | Input Power (mW) | Measured SAR (W/kg) | | Normalized to 1W (W/kg) | Target Value (W/kg) | Delta (%) | Tolerance (%) |
|---|---|---|---|---|---|---|---|---|---|
| 2023/04/07 | 2450 MHz | Head | 100 | 1g | 5.65 | 56.5 | 53.1 | 6.403 | ±10 |

*The SAR values above are normalized to 1 Watt forward power.

# SAR SYSTEM VALIDATION DATA

## System Performance 2450MHz

**DUT: D2450V2; Type: 2450 MHz; Serial: 970**

Communication System: UID 0, CW (0); Frequency: 2450 MHz;Duty Cycle: 1:1
Medium parameters used: f = 2450 MHz; $\sigma$ = 1.796 S/m; $\varepsilon_r$ = 40.852; $\rho$ = 1000 kg/m$^3$
Phantom section: Flat Section

DASY5 Configuration:

- Probe: EX3DV4 - SN7441; ConvF(7.54, 7.54, 7.54) @2450; Calibrated: 2022/05/16
- Sensor-Surface: 4mm (Mechanical Surface Detection)
- Electronics: DAE4 Sn1325; Calibrated: 2022/08/29
- Phantom: Twin SAM; Type: QD000P40CD; Serial: 1744
- Measurement SW: DASY52, Version 52.10 (4); SEMCAD X Version 14.6.14 (7501)

**Pin=100mw/Area Scan (10x11x1):** Measurement grid: dx=10mm, dy=10mm
Maximum value of SAR (interpolated) = 6.54 W/kg

**Pin=100mw/Zoom Scan (7x7x7)/Cube 0:** Measurement grid: dx=5mm, dy=5mm, dz=5mm
Reference Value = 49.27 V/m; Power Drift = 0.02 dB
Peak SAR (extrapolated) = 11.9 W/kg
**SAR(1 g) = 5.65 W/kg; SAR(10 g) = 2.58 W/kg**
Maximum value of SAR (measured) = 6.28 W/kg

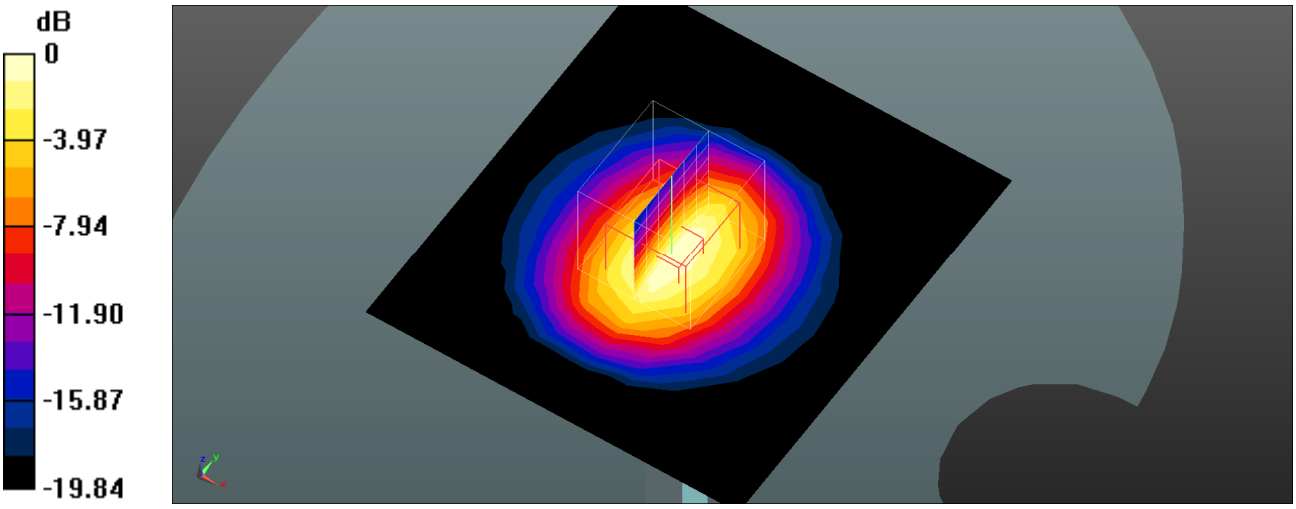


0 dB = 6.28 W/kg = 7.98 dBW/kg

# EUT TEST STRATEGY AND METHODOLOGY

## Test positions for body-worn and other configurations

Body-worn operating configurations should be tested with the belt-clips and holsters attached to the device and positioned against a flat phantom in normal use configurations. Devices with a headset output should be tested with a headset connected to the device. When multiple accessories that do not contain metallic components are supplied with the device, the device may be tested with only the accessory that dictates the closest spacing to the body. When multiple accessories that contain metallic components are supplied with the device, the device must be tested with each accessory that contains a unique metallic component. If multiple accessories share an identical metallic component (e.g., the same metallic belt-clip used with different holsters with no other metallic components), only the accessory that dictates the closest spacing to the body must be tested.

Body-worn accessories may not always be supplied or available as options for some devices that are intended to be authorized for body-worn use. A separation distance of 1.5 cm between the back of the device and a flat phantom is recommended for testing body-worn SAR compliance under such circumstances. Other separation distances may be used, but they should not exceed 2.5 cm. In these cases, the device may use body-worn accessories that provide a separation distance greater than that tested for the device provided however that the accessory contains no metallic components.

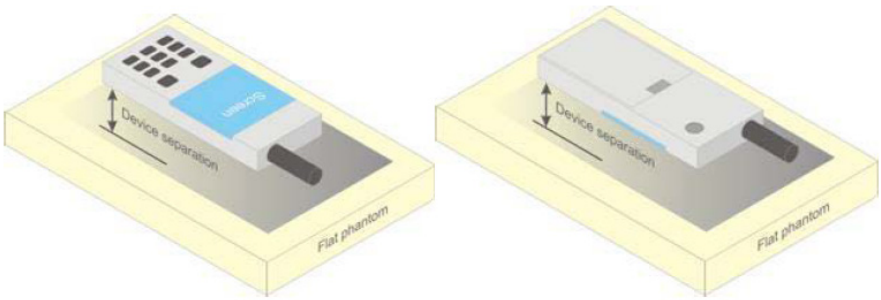


**Figure 5 – Test positions for body-worn devices**

## Test Distance for SAR Evaluation

For this case the EUT(Equipment Under Test) is set 0mm away from the phantom, the test distance is 0mm.

## SAR Evaluation Procedure

The evaluation was performed with the following procedure:

Step 1: Measurement of the SAR value at a fixed location above the ear point or central position was used as a reference value for assessing the power drop. The SAR at this point is measured at the start of the test and then again at the end of the testing.

Step 2: The SAR distribution at the exposed side of the head was measured at a distance of 4 mm from the inner surface of the shell. The area covered the entire dimension of the head or radiating structures of the EUT, the horizontal grid spacing was 15 mm x 15 mm, and the SAR distribution was determined by integrated grid of 1.5mm x 1.5mm. Based on these data, the area of the maximum absorption was determined by spline interpolation. The first Area Scan covers the entire dimension of the EUT to ensure that the hotspot was correctly identified.

Step 3: Around this point, a volume of 30 mm x 30 mm x 30 mm was assessed by measuring 7x 7 x 7 points. On the basis of this data set, the spatial peak SAR value was evaluated under the following procedure:

1) The data at the surface were extrapolated, since the center of the dipoles is 1.2 mm away from the tip of the probe and the distance between the surface and the lowest measuring point is 1.3 mm. The extrapolation was based on a least square algorithm. A polynomial of the fourth order was calculated through the points in z-axes. This polynomial was then used to evaluate the points between the surface and the probe tip.

2) The maximum interpolated value was searched with a straightforward algorithm. Around this maximum the SAR values averaged over the spatial volumes (1 g or 10 g) were computed by the 3D-Spline interpolation algorithm. The 3D-Spline is composed of three one dimensional splines with the “Not a knot"-condition (in x, y and z-directions). The volume was integrated with the trapezoidal-algorithm. One thousand points (10 x 10 x 10) were interpolated to calculate the averages.

All neighboring volumes were evaluated until no neighboring volume with a higher average value was found.

Step 4: Re-measurement of the SAR value at the same location as in Step 1. If the value changed by more than 5%, the evaluation was repeated.

# CONDUCTED OUTPUT POWER MEASUREMENT

## Test Procedure

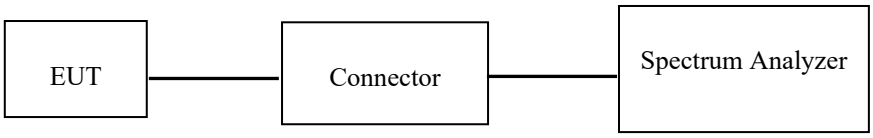


**FHSS**

## Maximum Target Output Power

| Max Target Power(dBm) | | | |
|---|---|---|---|
| **Mode/Band** | **Channel** | | |
| | **Low** | **Middle** | **High** |
| 2.4GHz FHSS ANT A | 18.0 | 18.0 | 18.0 |
| 2.4GHz FHSS ANT B | 18.0 | 18.0 | 18.0 |

**Test Results:**

**2.4GHz FHSS ANT A:**

| Mode | Channel | Channel frequency (MHz) | Peak Output Power |
|---|---|---|---|
| GFSK | Low | 2407 | 17.39 |
| | Middle | 2450 | 17.40 |
| | High | 2475 | 17.27 |

**2.4GHz FHSS ANT B:**

| Mode | Channel | Channel frequency (MHz) | Peak Output Power |
|---|---|---|---|
| GFSK | Low | 2407 | 15.99 |
| | Middle | 2450 | 16.31 |
| | High | 2475 | 16.42 |

**Duty Cycle**

| ANT | Mode | Duty Cycle (%) |
|---|---|---|
| A | 2.4G FHSS | 10.1 |
| B | 2.4G FHSS | 10.3 |

# Standalone SAR test exclusion considerations

**Antennas Location:**

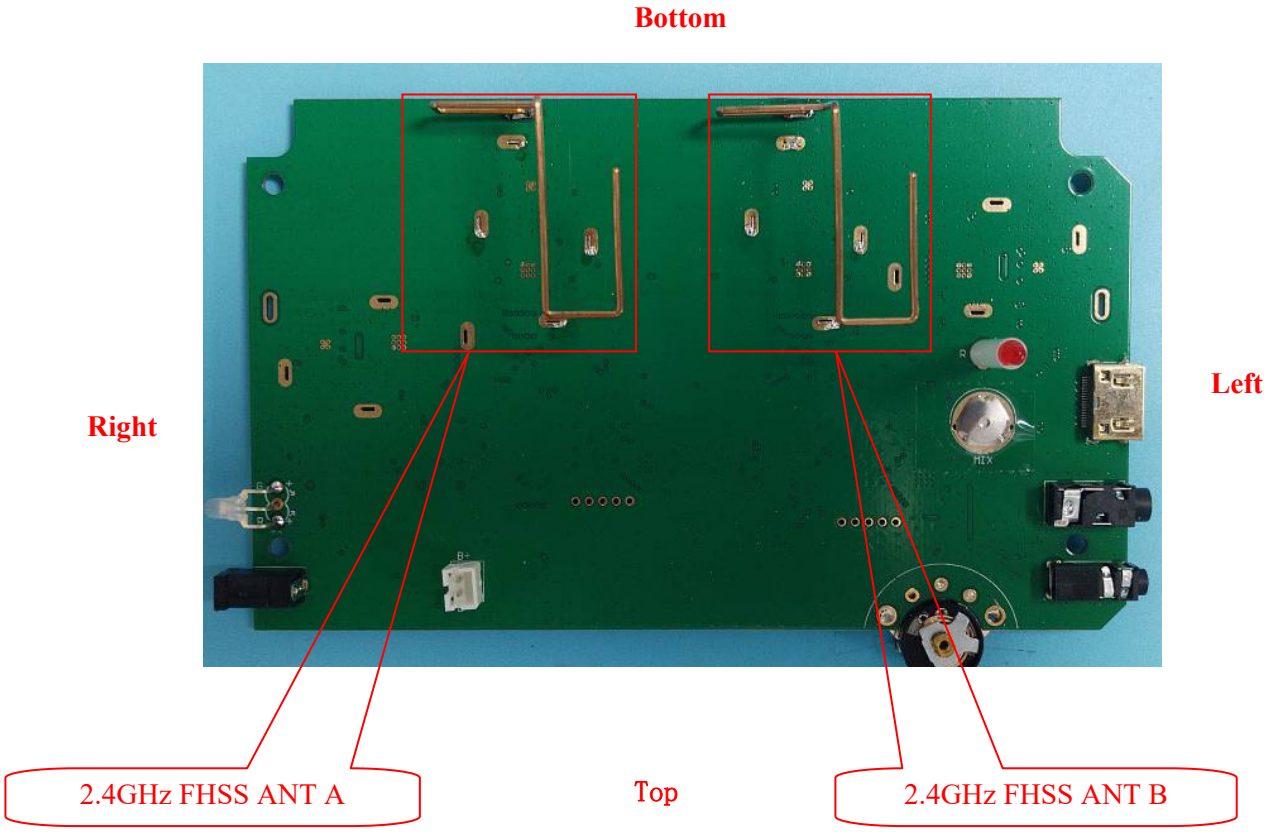


**EUT Front View**

**Antenna Distance To Edge**

| Antenna Distance To Edge(mm) | | | | | | |
|---|---|---|---|---|---|---|
| **Antenna** | **Front** | **Back** | **Left** | **Right** | **Top** | **Bottom** |
| 2.4GHz FHSS ANT A | 10 | 24 | 79 | 32 | 64 | ＜5 |
| 2.4GHz FHSS ANT B | 10 | 24 | 32 | 79 | 64 | ＜5 |

Note: The EUT is clipped to the waist with a belt clip and is used with headset that connects wireless. So, only the Body worn back side was tested.

**Standalone SAR test exclusion considerations**

General Sequence for Determination of Procedure (exemption or evaluation) to Establish Compliance with Exposure Limits for a Single RF Source:

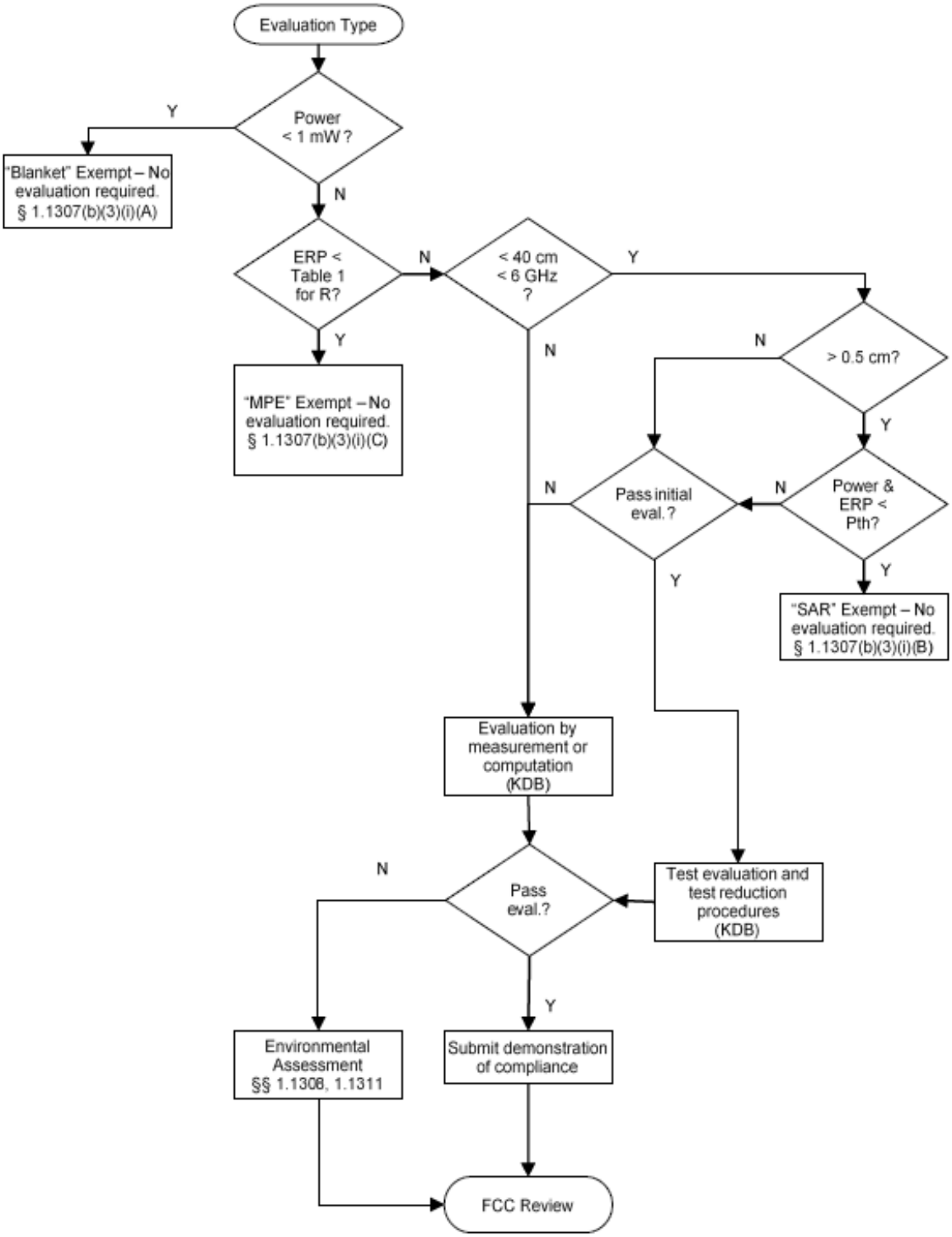

| Mode | Frequency (MHz) | Max Target Power (dBm) | Antenna gain (dBi) | $P_{Max}$ (dBm) | $P_{Max}$ (mW) | Separation Distance (mm) | $P_{th}$ (mW) | SAR Test Exclusion |
|---|---|---|---|---|---|---|---|---|
| 2.4GHz FHSS ANT A | 2475 | 18.0 | 0 | 18.0 | 63.10 | 0 | 2.72 | No |
| 2.4GHz FHSS ANT B | 2475 | 18.0 | 0 | 18.0 | 63.10 | 0 | 2.72 | No |

**Note:**
1. ERP= Max Target Power+ Antenna gain-2.15
2. $P_{Max}$ refers to the greater value in the conducted average power and ERP.
3. The formula for calculating $P_{th}$ is given below, with distances ranging from 20cm to 40cm.

$$P_{\text{th}}\ (\text{mW}) = ERP_{20\ \text{cm}}\ (\text{mW}) = \begin{cases} 2040f & 0.3\ \text{GHz} \le f < 1.5\ \text{GHz} \\ 3060 & 1.5\ \text{GHz} \le f \le 6\ \text{GHz} \end{cases}$$

4. The formula for calculating $P_{th}$ is given below, with distances ranging from 0.5cm to 40cm.

$$P_{\text{th}}\ (\text{mW}) = \begin{cases} ERP_{20\ \text{cm}}(d/20\ \text{cm})^x & d \le 20\ \text{cm} \\ ERP_{20\ \text{cm}} & 20\ \text{cm} < d \le 40\ \text{cm} \end{cases}$$

where

$$x = -\log_{10}\left(\frac{60}{ERP_{20\ \text{cm}}\sqrt{f}}\right)$$

and $f$ is in GHz, $d$ is the separation distance (cm), and $ERP_{20cm}$ is per Formula (Note 3).
5. When the separation distance is less than 0.5cm, 0.5cm is used as the calculation distance

# SAR MEASUREMENT RESULTS

This page summarizes the results of the performed dosimetric evaluation.

## SAR Test Data

### Environmental Conditions

| | |
|---|---|
| **Temperature:** | 22.5-22.4°C |
| **Relative Humidity:** | 49-55 % |
| **ATM Pressure:** | 101.1 kPa |
| **Test Date:** | 2023/04/07 |

*Testing was performed by Jacky Yang, Ryse Chai.*

**2.4GHz FHSS ANT A:**

| EUT Position | Frequency (MHz) | Test Mode | Max. Meas. Power (dBm) | Max. Rated Power (dBm) | Scaled Factor | 1g SAR (W/kg) | | |
|---|---|---|---|---|---|---|---|---|
| | | | | | | Meas. SAR | Scaled SAR | Plot |
| Body Worn Back (0mm) | 2407 | GFSK | / | / | / | / | / | / |
| | 2450 | GFSK | 17.40 | 18.0 | 1.148 | 0.00825 | 0.01 | 1# |
| | 2475 | GFSK | / | / | / | / | / | / |

**2.4GHz FHSS ANT B:**

| EUT Position | Frequency (MHz) | Test Mode | Max. Meas. Power (dBm) | Max. Rated Power (dBm) | Scaled Factor | 1g SAR (W/kg) | | |
|---|---|---|---|---|---|---|---|---|
| | | | | | | Meas. SAR | Scaled SAR | Plot |
| Body Worn Back (0mm) | 2407 | GFSK | / | / | / | / | / | / |
| | 2450 | GFSK | 16.31 | 18.0 | 1.476 | 0.00977 | 0.01 | 2# |
| | 2475 | GFSK | / | / | / | / | / | / |

**Note**:
1. When the 1-g SAR is≤ 0.8W/Kg, testing for other channels are optional.
2. When SAR or MPE is not measured at the maximum power level allowed for production units, the results must be scaled to the maximum tune-up tolerance limit according to the power applied to the individual channels tested to determine compliance.
3. For this case the EUT(Equipment Under Test) have only the Body Worn Back to RF exposure, so only Body Worn Back need to test.

# SAR Measurement Variability

In accordance with published RF Exposure KDB procedure 865664 D01 SAR measurement 100 MHz to 6 GHz v01. These additional measurements are repeated after the completion of all measurements requiring the same head or body tissue-equivalent medium in a frequency band. The test device should be returned to ambient conditions (normal room temperature) with the battery fully charged before it is re-mounted on the device holder for the repeated measurement(s) to minimize any unexpected variations in the repeated results

1) Repeated measurement is not required when the original highest measured SAR is < 0.80 W/kg; steps 2) through 4) do not apply.
2) When the original highest measured SAR is ≥ 0.80 W/kg, repeat that measurement once.
3) Perform a second repeated measurement only if the ratio of largest to smallest SAR for the original and first repeated measurements is > 1.20 or when the original or repeated measurement is ≥ 1.45 W/kg (~ 10% from the 1-g SAR limit).
4) Perform a third repeated measurement only if the original, first or second repeated measurement is ≥1.5 W/kg and the ratio of largest to smallest SAR for the original, first and second repeated measurements is > 1.20.

**The Highest Measured SAR Configuration in Each Frequency Band**

**Body**

| **SAR probe calibration point** | Frequency Band | Freq.(MHz) | EUT Position | Meas. SAR (W/kg) | | Largest to Smallest SAR Ratio |
|---|---|---|---|---|---|---|
| | | | | Original | Repeated | |
| / | / | / | / | / | / | / |

**Note:**

1. Second Repeated Measurement is not required since the ratio of the largest to smallest SAR for the original and first repeated measurement is not > 1.20.
2. The measured SAR results **do not** have to be scaled to the maximum tune-up tolerance to determine if repeated measurements are required.
3. SAR measurement variability must be assessed for each frequency band, which is determined by the **SAR probe calibration point and tissue-equivalent medium** used for the device measurements..

# SAR SIMULTANEOUS TRANSMISSION DESCRIPTION

**Simultaneous Transmission:**

Note:
Antenna A and B cannot transmit simultaneously.

# SAR Plots

**Plots 1#:**

**DUT: EVX-CMod; Type: 2.4 GHz Base Station Conference Module ; Serial: 1X2G**

Communication System: UID 0, 2.4G FHSS (0); Frequency: 2450 MHz;Duty Cycle: 1:9.90099
Medium parameters used (interpolated): f = 2450 MHz; $\sigma$ = 1.796 S/m; $\varepsilon_r$ = 40.852; $\rho$ = 1000 kg/m$^3$
Phantom section: Flat Section

DASY5 Configuration:

- Probe: EX3DV4 - SN7441; ConvF(7.54, 7.54, 7.54) @ 2450 MHz; Calibrated: 2022/05/16
- Sensor-Surface: 4mm (Mechanical Surface Detection)
- Electronics: DAE4 Sn1325; Calibrated: 2022/08/29
- Phantom: Twin SAM; Type: QD000P40CD; Serial: 1744
- Measurement SW: DASY52, Version 52.10 (4); SEMCAD X Version 14.6.14 (7501)

**Body Back/2.4G FHSS Mid/Area Scan (11x11x1):** Measurement grid: dx=10mm, dy=10mm
Maximum value of SAR (measured) = 0.00631 W/kg

**Body Back/2.4G FHSS Mid/Zoom Scan (7x7x7)/Cube 0:** Measurement grid: dx=5mm, dy=5mm, dz=5mm
Reference Value = 0.6730 V/m; Power Drift = 0.11 dB
Peak SAR (extrapolated) = 0.0190 W/kg
**SAR(1 g) = 0.00825 W/kg; SAR(10 g) = 0.00566 W/kg**
Maximum value of SAR (measured) = 0.0142 W/kg

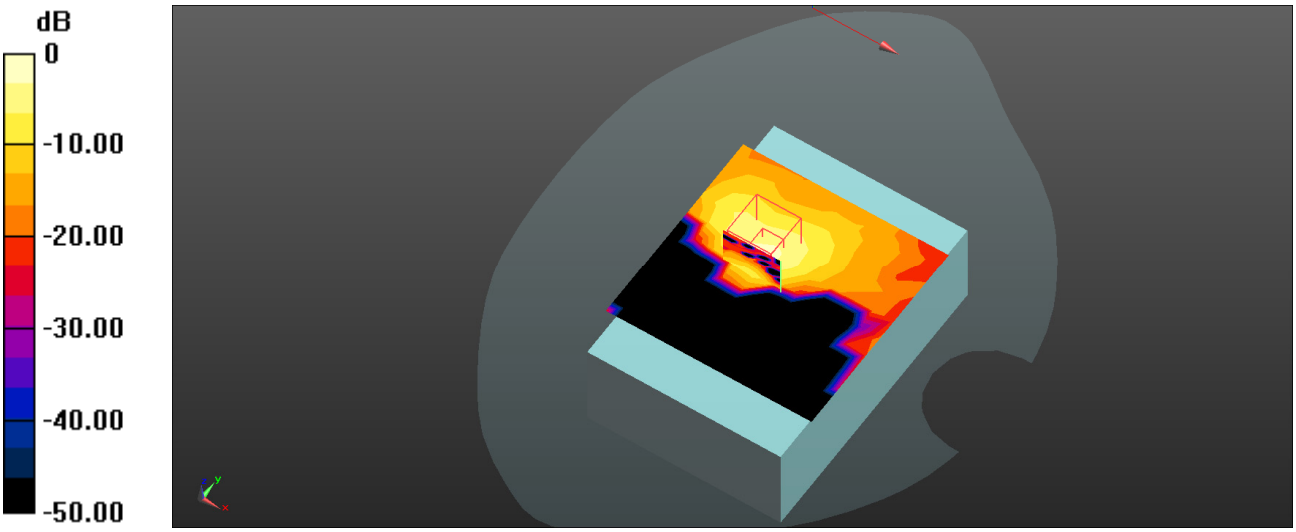


0 dB = 0.0142 W/kg = -18.48 dBW/kg

**Plots 2#:**

**DUT: EVX-CMod; Type: 2.4 GHz Base Station Conference Module ; Serial: 1X2G**

Communication System: UID 0, 2.4G FHSS (0); Frequency: 2450 MHz;Duty Cycle: 1:9.70873
Medium parameters used (interpolated): f = 2450 MHz; $\sigma$ = 1.796 S/m; $\varepsilon_r$ = 40.852; $\rho$ = 1000 kg/m$^3$
Phantom section: Flat Section

DASY5 Configuration:

- Probe: EX3DV4 - SN7441; ConvF(7.54, 7.54, 7.54) @ 2450 MHz; Calibrated: 2022/05/16
- Sensor-Surface: 4mm (Mechanical Surface Detection)
- Electronics: DAE4 Sn1325; Calibrated: 2022/08/29
- Phantom: Twin SAM; Type: QD000P40CD; Serial: 1744
- Measurement SW: DASY52, Version 52.10 (4); SEMCAD X Version 14.6.14 (7501)

**Body Back/2.4G FHSS Mid/Area Scan (11x11x1):** Measurement grid: dx=10mm, dy=10mm
Maximum value of SAR (measured) = 0.0150 W/kg

**Body Back/2.4G FHSS Mid/Zoom Scan (7x7x7)/Cube 0:** Measurement grid: dx=5mm, dy=5mm, dz=5mm
Reference Value = 0.61224 V/m; Power Drift = 0.17 dB
Peak SAR (extrapolated) = 0.0525 W/kg
**SAR(1 g) = 0.00977 W/kg; SAR(10 g) = 0.00497 W/kg**
Maximum value of SAR (measured) = 0.0115 W/kg

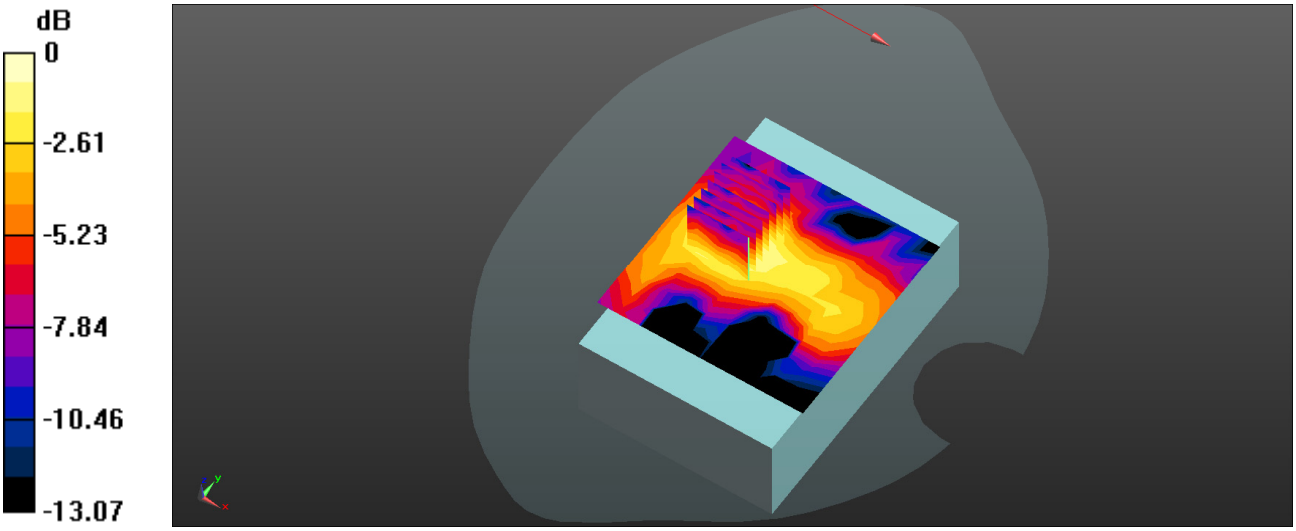


0 dB = 0.0115 W/kg = -19.39 dBW/kg

# APPENDIX A MEASUREMENT UNCERTAINTY

The uncertainty budget has been determined for the measurement system and is given in the following Table.

**Measurement uncertainty evaluation for IEEE1528-2013 SAR test**

| Source of uncertainty | Tolerance/ uncertainty ± % | Probability distribution | Divisor | ci (1 g) | ci (10 g) | Standard uncertainty ± %, (1 g) | Standard uncertainty ± %, (10 g) |
|---|---|---|---|---|---|---|---|
| **Measurement system** | | | | | | | |
| Probe calibration | 6.55 | N | 1 | 1 | 1 | 6.6 | 6.6 |
| Axial Isotropy | 4.7 | R | √3 | 1 | 1 | 2.7 | 2.7 |
| Hemispherical Isotropy | 9.6 | R | √3 | 0 | 0 | 0.0 | 0.0 |
| Boundary effect | 1.0 | R | √3 | 1 | 1 | 0.6 | 0.6 |
| Linearity | 4.7 | R | √3 | 1 | 1 | 2.7 | 2.7 |
| Detection limits | 1.0 | R | √3 | 1 | 1 | 0.6 | 0.6 |
| Readout electronics | 0.3 | N | 1 | 1 | 1 | 0.3 | 0.3 |
| Response time | 0.0 | R | √3 | 1 | 1 | 0.0 | 0.0 |
| Integration time | 0.0 | R | √3 | 1 | 1 | 0.0 | 0.0 |
| RF ambient conditions – noise | 1.0 | R | √3 | 1 | 1 | 0.6 | 0.6 |
| RF ambient conditions–reflections | 1.0 | R | √3 | 1 | 1 | 0.6 | 0.6 |
| Probe positioner mech. Restrictions | 0.8 | R | √3 | 1 | 1 | 0.5 | 0.5 |
| Probe positioning with respect to phantom shell | 6.7 | R | √3 | 1 | 1 | 3.9 | 3.9 |
| Post-processing | 2.0 | R | √3 | 1 | 1 | 1.2 | 1.2 |
| **Test sample related** | | | | | | | |
| Test sample positioning | 2.8 | N | 1 | 1 | 1 | 2.8 | 2.8 |
| Device holder uncertainty | 6.3 | N | 1 | 1 | 1 | 6.3 | 6.3 |
| Drift of output power | 5.0 | R | √3 | 1 | 1 | 2.9 | 2.9 |
| **Phantom and set-up** | | | | | | | |
| Phantom uncertainty (shape and thickness tolerances) | 4.0 | R | √3 | 1 | 1 | 2.3 | 2.3 |
| Liquid conductivity target) | 5.0 | R | √3 | 0.64 | 0.43 | 1.8 | 1.2 |
| Liquid conductivity meas.) | 2.5 | N | 1 | 0.64 | 0.43 | 1.6 | 1.1 |
| Liquid permittivity target) | 5.0 | R | √3 | 0.6 | 0.49 | 1.7 | 1.4 |
| Liquid permittivity meas.) | 2.5 | N | 1 | 0.6 | 0.49 | 1.5 | 1.2 |
| Combined standard uncertainty | | RSS | | | | 12.2 | 12.0 |
| Expanded uncertainty 95 % confidence interval) | | | | | | 24.3 | 23.9 |

# APPENDIX B EUT TEST POSITION PHOTOS

**Liquid depth ≥ 15cm**

Phantom Type: Twin SAM Phantom ; Type: QD000 P40 CD; Serial: 1744

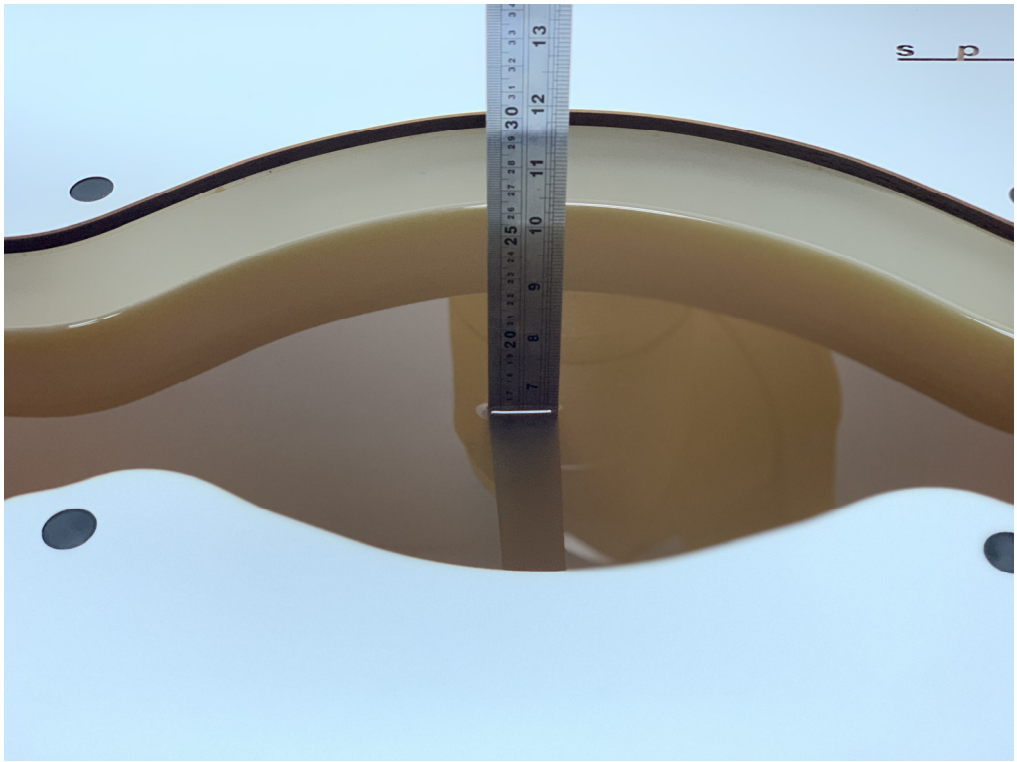

**Back to Phantom with Belt Clip(0mm)**

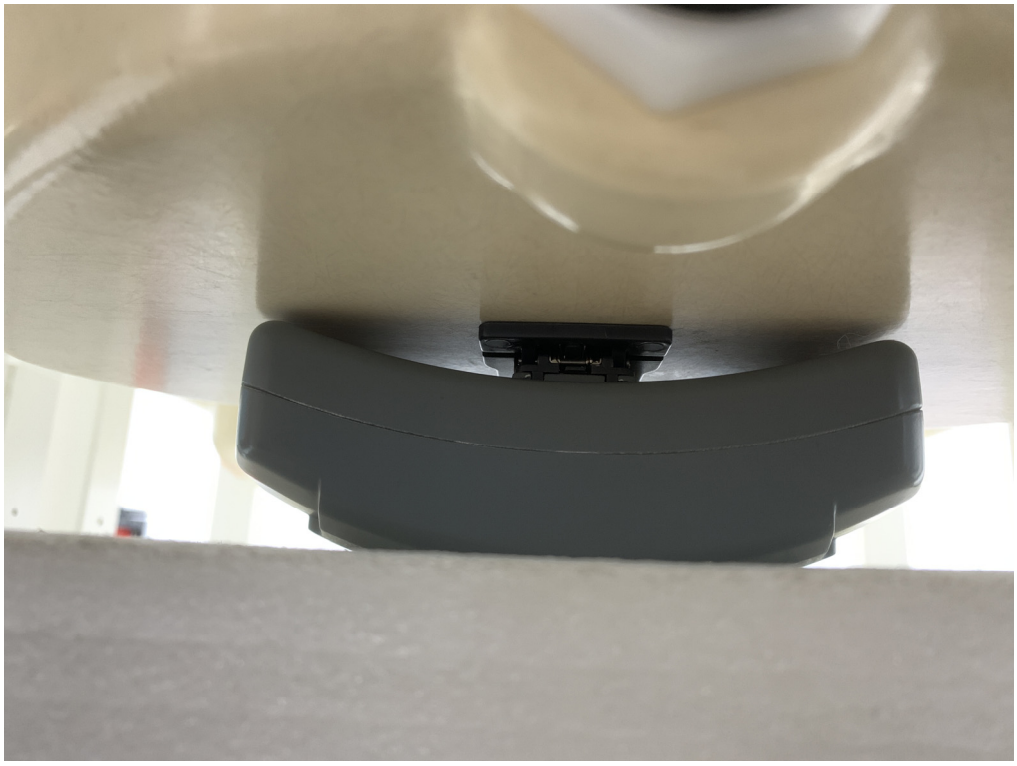

# APPENDIX C PROBE CALIBRATION CERTIFICATES

**Please Refer to the Attachment.**

******* END OF REPORT *******