QC35xFNx QC55xFNx Dual-mode Bluetooth Module

GT-tronics QCC Bluetooth Module

Features

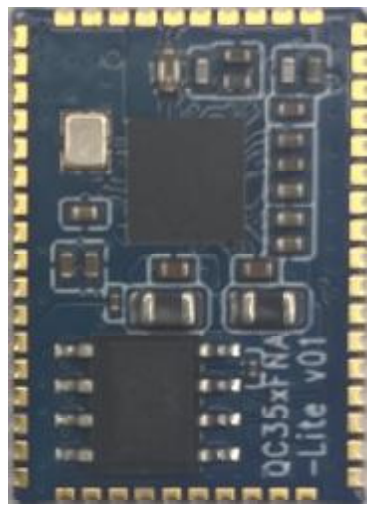

- Bluetooth v5.2 Class 1/2 module (Classic + LE with 2Mbps)
- Dual core 32 bit application processor and 120MHz Kalimba DSP
- Built-in 16/32/64Mbit flash on module
- Extremely low current consumption
- Integrated Li-ion battery charger
- 5V/3V/Battery power supply and configurable 1.8/3.3V I/O operation
- LED drivers, I2C, UART and PIO interfaces
- BLE GATT and HID profile support
- A2DP, AVRCP, HSP, HFP, SPP profile support
- Qualcomm TrueWireless Mirroring for stereo earbud application
- HFP-AG / A2DP Source transmitter (Tx) application firmware available
- USB Full Speed Device (USB-FS 12 Mbps)
- High quality 24-bit stereo audio codec and up to 96KHz resolution
- I2S/PCM/SPDIF digital audio interface (I2S/PCM input only for QC356FNA)
- Differential analog and digital MEMS microphones interfaces (analog output is mono only for QC356FNA)
- Ready for LE Audio
- Support firmware update via USB and OTA
- Always-on voice wake-word and button activated digital assistants (license may be required)
- SBC, AAC, aptX Classic, aptX HD and aptX Adaptive BT codec (license may be required)
- 1 or 2 mic Qualcomm CVC noise suppression and echo cancellation (license may be required)
- Feed forward, feedback and hybrid Active Noise Cancellation ANC (license required)
- RoHS / REACH compliant
- BQB qualified and FCC/IC-ISED/CE/RCM/JR-MIC certification available upon request
- Optional RF shield can (QC35xFNB-S / QC55xFNB-S)
- Dimension:
    - 18.0 x 13.0 x 2.3 mm (QC35xFNA / QC35xFNB / QC55xFNB)
    - 18.0 x 13.0 x 2.8 mm (QC35xFNB-S / QC55xFNB-S)

Applications

- Wireless headphones/headsets
- Wireless speakers and sound bars
- TWS earbuds
- USB audio dongles
- Bluetooth helmets
- Bluetooth two-way radio and walkie-talkie
- Unified Communication devices
- TV and home theaters
- AV Receivers
- Wearable audio
- Audio transmitters and receivers
- Professional musical equipment
- Hands-free car kit
- VoIP handsets

Description

QC35xFNx and QC55xFNx are Bluetooth Class1 (max 13dBm) dual mode module. It is based on the most advanced QCC305x and QCC515x chipset and the latest ADK. It supports Bluetooth v5.2 standard with LE audio capability. Dual-core application processors with 32/80MHz operation and dual 32-bit 120MHz Kymera DSP Co-Processor enable not only the existing Bluetooth multi-media function such as stereo audio (A2DP audio) communications but also extended features for the future. The highly integrated hardware includes high quality stereo DAC, and battery charger, thus saving costs of external components. The host interfaces include USB, I2S, SPI and UART, that are programmable for data communication, module control or firmware upgrade.

The powerful and flexible design allows the module to support HSP/HFP/A2DP/AVRCP SPP, PBAP and most Bluetooth Classic profiles, at the same handling LE profiles for applications like battery reporting, remote control and HID. Furthermore, the SBC, AAC, aptX Classic, aptX HD, aptX Adaptive and aptX Voice audio streaming are also supported. The module is also made ready for the LE Audio, the next generation of Bluetooth Audio.

The complete module design relieves host system developers from handling complex Bluetooth operations and compatibility issues. With integrated on-chip balun and on-board band pass filter, it provides a clean 50 ohm antenna interface to serve the needs of various antenna designs, matching and testing in host system development.

Block Diagram

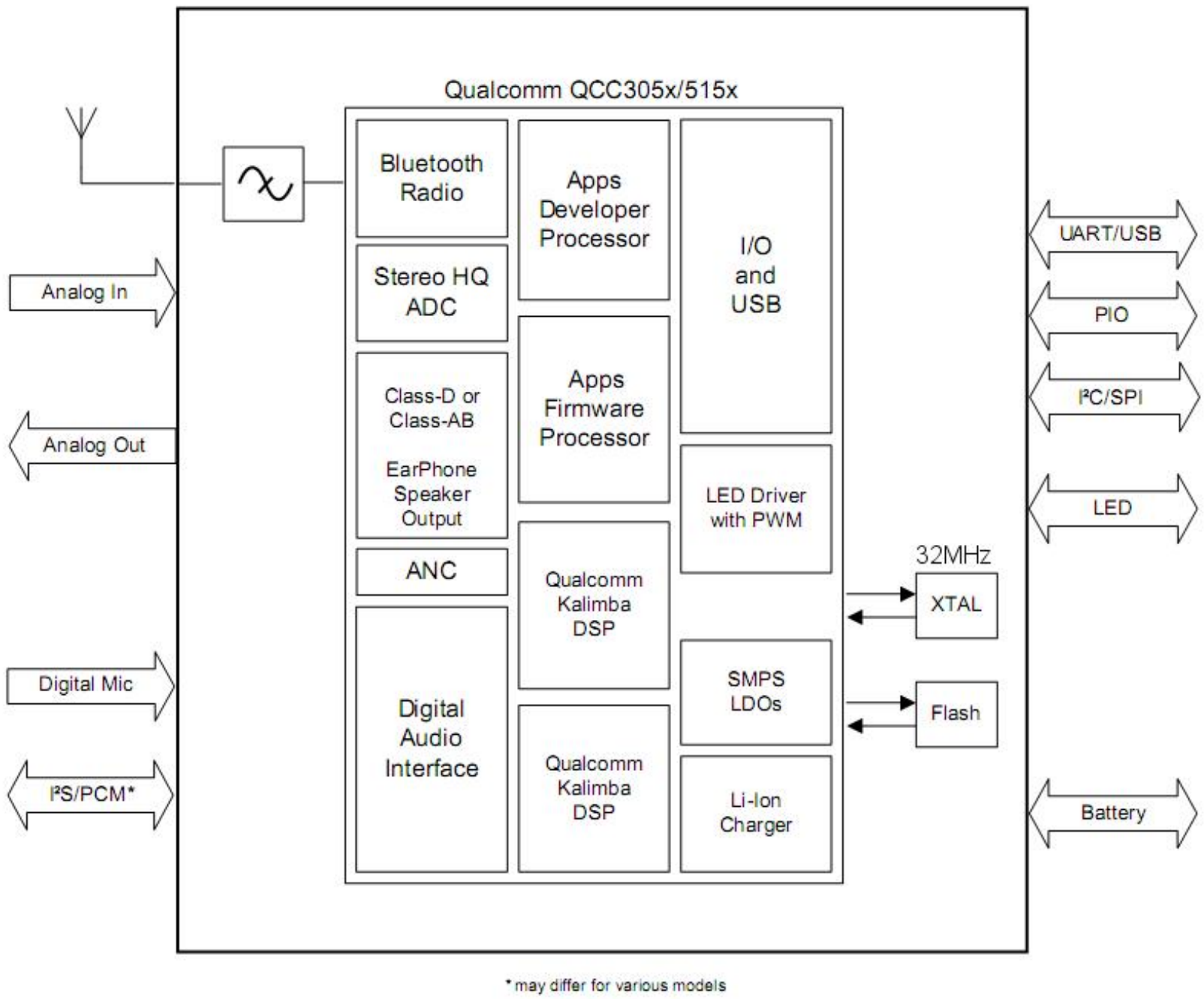

Physical Layout

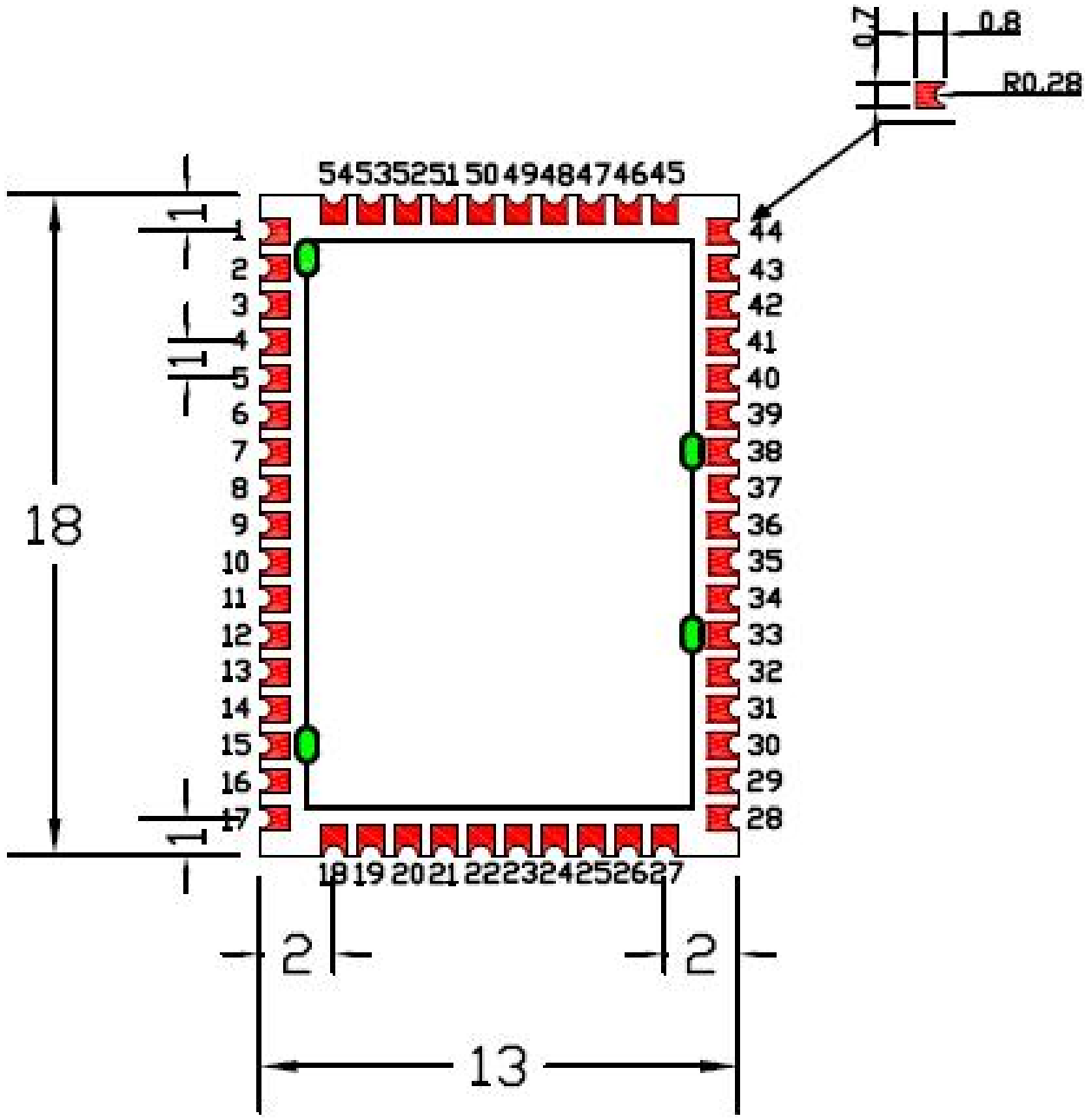

Module Top View
(dimension figures in mm)

Recommended PCB Footprint

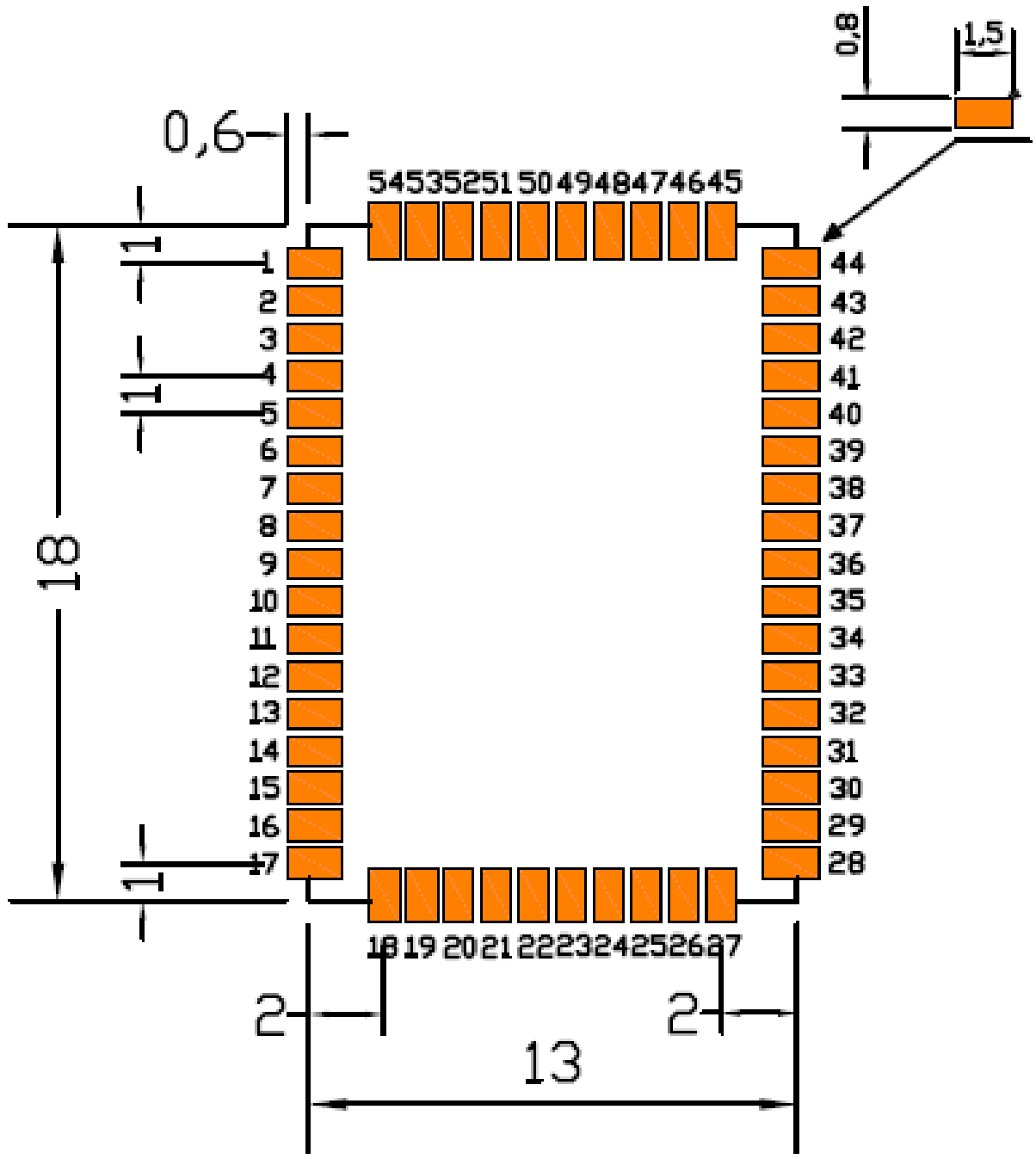

Pins Configurations

PIN	QC35xFNA	QC35xFNB QC55xFNB	TYPE	FUNCTIONS
1	GND	GND	GND	Ground
2	MIC2_P_LIN_RP	MIC2_P_LIN_RP	Analog	Right Mic/line in audio positive input
3	MIC2_N_LIN_RN	MIC2_N_LIN_RN	Analog	Right Mic/line in audio negative input
4	MIC1_P_LIN_LP	MIC1_P_LIN_LP	Analog	Left Mic/line in audio positive input
5	MIC1_N_LIN_LN	MIC1_N_LIN_LN	Analog	Left Mic/line in audio negative input
6	MIC_BIAS	MIC_BIAS	Analog	Microphone bias output
7	SPKL_P	SPKL_P	Analog	Differential positive left speaker output
8	SPKL_N	SPKL_N	Analog	Differential negative left speaker output
9 (1)	SPKR_P	SPKR_P	Analog	Differential positive right speaker output
10(1)	SPKR_N	SPKR_N	Analog	Differential negative right speaker output
11	GND	GND	GND	Ground
12	VOUT_1v8	VOUT_1v8	Power	1.8v switching regulator output
13 (1)	NC	PIO43	Bi-directional	Programmable Input/Output line
14 (1)	NC	PIO40	Bi-directional	Programmable Input/Output line
15	GND	GND	GND	Ground
16	PIO5	PIO5	Bi-directional	Programmable Input/Output line
17	PIO7	PIO7	Bi-directional	Programmable Input/Output line
18	PIO4	PIO4	Bi-directional	Programmable Input/Output line
19	PIO8	PIO8	Bi-directional	Programmable Input/Output line
20	PIO6	PIO6	Bi-directional	Programmable Input/Output line
21	GND	GND	GND	Ground
22(1)	NC	PIO3	Bi-directional	Programmable Input/Output line
23(1)	NC	LED5	Open Drain	LED driver
24	LED4	LED4	Open Drain	LED driver
25(1)	NC	LED2	Open Drain	LED driver
26	LED1	LED1	Open Drain	LED driver
27(1)	NC	LED0	Open Drain	LED driver
28	PIO16	PIO16	Bi-directional	Programmable Input/Output line
29(1)	NC	PIO15	Bi-directional	Programmable Input/Output line
30(1)	NC	PIO21	Bi-directional	Programmable Input/Output line
31(1)	NC	PIO41	Bi-directional	Programmable Input/Output line
32(1)	NC	PIO42	Bi-directional	Programmable Input/Output line
33	GND	GND	GND	Ground
34	VCHG	VCHG	Analog	5v Charger input.
35(1)	NC	CHG_EXT	Analog	External battery charger control.
36(1)	NC	VCHG_SENSE	Analog	Battery charger sense input.
37	VBAT	VBAT	Power	Battery input
38	GND	GND	GND	Ground
39	SYS_CTRL	SYS_CTRL	CMOS Input	System power on enable
40	USB_DP	USB_DP	Analog	USB data +ve
41	USB_DN	USB_DN	Analog	USB data –ve
42	VPAD1	VPAD1	Power	Power supply for PIO1..PIO8
43	VPAD2	VPAD2	Power	Power supply for PIO15..PIO21 and PIO40..PIO44
44	GND	GND	GND	Ground
45	PIO17	PIO17	Bi-directional	Programmable Input/Output line
46	PIO18	PIO18	Bi-directional	Programmable Input/Output line
47	PIO19	PIO19	Bi-directional	Programmable Input/Output line
48(1)	NC	PIO20	Bi-directional	Programmable Input/Output line
49	GND	GND	GND	Ground
50	BT_RF	BT_RF	Analog	RF Antenna port
51	GND	GND	GND	Ground
52(1)	NC	PIO44	Bi-directional	Programmable Input/Output line

53[(1)]	NC	PIO2	Bi-directional	Programmable Input/Output line
54	PIO1	PIO1	Bi-directional	Programmable Input/Output line

Notes :
(1) : All these pins are NC pins and have no function for QC35xFNA version.

General Electrical Specification

Absolute Maximum Ratings		
Ratings	Min.	Max.
Storage Temperature	-40 ℃	+85 ℃
Supply Voltage at VCHG	-0.4 V	7.0 V
Supply Voltage at VBAT and SYS_CTRL	-0.4 V	4.8 V
Supply Voltage at VPAD	-0.4V	3.80V
Recommended Operating Condition		
Operating Condition	Min.	Max.
Operating Temperature range	-10 ℃	+60 ℃
Supply Voltage at VCHG	4.75 V	5.75 V
Supply Voltage at VBAT and SYS_CTRL	2.8 V	4.25 V
Supply Voltage at VPAD	1.70 V	3.60 V

Parameters	Description	Min.	Typ.	Max.	Units
Current Consumption - A2DP Streaming	Typical	-	5	-	mA
Battery Charge Current - Internal mode		-	-	200	mA
Battery Charge Current - External mode (FNB version only)		-	-	1800	mA
ADC Input Range		-	-	2.4	Vpp

Audio Characteristics					
Parameter	Description	Min.	Typ.	Max.	Units
Analog Output - THD+N	Class AB [1]	-	-89.6	-	dB
	Class D [1]	-	-90.6	-	dB
Analog Output - SNR Signal-to-Noise A-weighted	Class AB [1]	-	101.2	-	dBA
	Class D [1]	-	99.9	-	dBA
Analog Output - Dynamic Range A-weighted	Class AB [1]	-	102.1	-	dB
	Class D [1]	-	100.1	-	dB
Analog Output - Power	Class AB [1]	-	30	-	mW
	Class D [1]	-	30	-	mW
Analog Input - THD+N	single-ended [2]	-	-85.5	-	dB
	differential [2]	-	-93.4	-	dB
Analog Input – SNR Signal-to-Noise A-weighted	single-ended [2]	-	101.2	-	dB
	differential [2]	-	99.2	-	dB
Analog Input - Dynamic Range A-weighted	single-ended [2]	-	101.4	-	dB
	differential [2]	-	100.6	-	dB
ADC Sample Rates	24bit [3]	8	-	96	kHz
DAC Sample Rates	24bit [4]	8	-	192	kHz

Notes:
[1] Load 32Ω, input frequency 1kHz, B/W 20Hz to 20kHz
[2] Input frequency 1kHz, B/W 20Hz to 20kHz
[3] Available sample rates 8, 16, 32, 44.1, 48, 96
[4] Available sample rates 8, 16, 32, 44.1, 48, 96, 192

Radio Characteristics

General Radio Characteristics		
Operating Frequency	2400 to 2483.5 MHz	
RF Output Power	0 – 13 dBm	
RX Sensitivity	-96dBm (Typ)	
Receiving Signal Range	30 m (Typ)	
Lower quad band	2 MHz	
Upper quad band	3.5 MHz	
Carrier frequency	2402 to 2480 MHz, 1 MHz step, 79 channels	
Modulation Method	GFSK (1 Mbps) Pie/4 DQPSK (2 Mbps) 8DQPSK (3Mbps)	
Hopping	1600 hops/s, 1 MHz channel space	
Maximum data rate	GFSK	Asynchronous: 732.2 kbps / 57.6 kbps Synchronous: 433.9 kbps / 433.9 kbps
	Pie/4 DQPSK	Asynchronous: 1448.5 kbps / 115.2 kbps Synchronous: 869.7 kbps / 869.7 kbps
	8DQPSK	Asynchronous: 2178.1 kbps / 177.2 kbps Synchronous: 1306.9 kbps / 1306.9 kbps

Basic Rate, VBAT = 3.7V Temperature =+25°C						
	Frequency (GHz)	Min	Typ	Max	Bluetooth Specification	Unit
Sensitivity at 0.1% BER	2.402	-	-95.5	-93.5	<= - 70	dBm
	2.441	-	-96	-94		dBm
	2.480	-	-96	-94		dBm
Maximum received signal at 0.1% BER	>= -9				> - 20	dBm
RF transmit power [1]		11.5	+13	-	-6 to +20 [2]	dBm
Initial carrier frequency tolerance		-75	10	+75	±75	kHz
20dBm bandwidth for modulated carrier		-	925	1000	< 1000	kHz
Drift (single slot packet)	Single Slot	-	10	25	<25	kHz
	Three Slot	-	10	40		kHz
	Five Slot	-	10	40		kHz
Drift Rate		-	5	20	<20	kHz/50µs
△f1avg "Maximum Modulation"		140	165	175	140<△f1avg <175	kHz
△f2maz "Minimum Modulation"		115	147	-	>=115	kHz
C/I co-channel		-	-	-	<= 11	dB
Adjacent channel selectivity C/I F=F0 +1 MHz [3 5]		-	-9	0	<= 0	dB
Adjacent channel selectivity C/I F=F0 - 1MHz [3 5]		-	-11	0	<= 0	dB
Adjacent channel selectivity C/I F=F0 +2 MHz [3 5]		-	-39	-30	<= - 30	dB
Adjacent channel selectivity C/I F<F0 - 3MHz [3 5]		-	-61	-40	<= - 40	dB
Adjacent channel selectivity C/I F=F0 +3 MHz [3 5]		-	-47	-40	<= - 40	dB
Adjacent channel selectivity C/I F>F0 +3 MHz [3 5]		-	-60	-40	<= - 40	dB
Adjacent channel selectivity C/I F=Fimage [3 5]		-	-33	-9	<= -9	dB
Adjacent channel transmit power F=F0±2MHz [4 5]		-	-	-	<= - 20	dBc
Adjacent channel transmit power F=F0±3MHz [4 5]		-	-	-	<= - 40	dBc

Enhanced Rate, VBAT = 3.7V Temperature =+25°C						
	Frequency (GHz)	Min	Typ	Max	Bluetooth Specification	Unit
Sensitivity at 0.01% BER Pie/4 DQPSK	2.402	-	-95.0	-93.0	<= - 70	dBm
	2.441	-	-95.0	-93.0		dBm
	2.480	-	-95.0	-93.0		dBm
Sensitivity at 0.01% BER 8DQPSK	2.402	-	-88.5	-86.5	<= - 70	dBm
	2.441	-	-88.5	-86.5		dBm
	2.480	-	-88.5	-86.5		dBm
Maximum received signal at 0.1% BER	>= -9				> - 20	dBm
RF transmit power [1]		8.5	+10.0	-	-6 to +20 [2]	dBm
Pie/4 DQPSK						
Adjacent channel selectivity C/I F=F0 +1 MHz [4 5]		-	-10	0	<= 0	dB
Adjacent channel selectivity C/I F=F0 - 1MHz [4 5]		-	-11	0	<= 0	dB
Adjacent channel selectivity C/I F=F0 +2 MHz [4 5]		-	-41	-30	<= - 30	dB
Adjacent channel selectivity C/I F<F0 - 3MHz [4 5]		-	-61	-40	<= - 40	dB
Adjacent channel selectivity C/I F=F0 +3 MHz [4 5]		-	-48	-40	<= - 40	dB
Adjacent channel selectivity C/I F>F0 +3 MHz [4 5]		-	-61	-40	<= - 40	dB
Adjacent channel selectivity C/I F=Fimage [4 5]		-	-35	-7	<= -9	dB
Pie/4 DQPSK						
Adjacent channel selectivity C/I F=F0 +1 MHz [4 5]		-	-5	5	<= 5	dB
Adjacent channel selectivity C/I F=F0 - 1MHz [4 5]		-	-7	5	<= 5	dB
Adjacent channel selectivity C/I F=F0 +2 MHz [4 5]		-	-38	-25	<= - 25	dB
Adjacent channel selectivity C/I F<F0 - 3MHz [4 5]		-	-55	-33	<= - 33	dB
Adjacent channel selectivity C/I F=F0 +3 MHz [4 5]		-	-41	-33	<= - 33	dB
Adjacent channel selectivity C/I F>F0 +3 MHz [4 5]		-	-55	-33	<= - 33	dB
Adjacent channel selectivity C/I F=Fimage [4 5]		-	-29	0	<= 0	dB

Notes:
[1] Default firmware is set to target 13dBm. Output power is measured at the RF chip pin. Specified Min value is based on statistical variance and represents the absolute limit rather than expected performance.
[2] Class 1/2 RF transmit power range in the Bluetooth specification
[3] Up to three exceptions are allowed in the Bluetooth specification
[4] Up to five spurious response frequencies are allowed in the Bluetooth specification
[5] Measured at F0 = 2441MHz

Bluetooth Low Energy, Temperature =+25°C						
	Frequency (GHz)	Min	Typ	Max	Bluetooth Specification	Unit
Sensitivity at 30.8% PER 1Mb/s [3]	2.402	-	-99.0	-97.0	<= - 70	dBm
	2.440	-	-99.0	-97.0		dBm
	2.480	-	-99.0	-97.0		dBm
Sensitivity at 30.8% PER 2Mb/s [3]	2.402	-	-88.5	-86.5	<= - 70	dBm
	2.440	-	-88.5	-86.5		dBm
	2.480	-	-88.5	-86.5		dBm
Maximum received signal at 30.8% PER	>= -9				> - 20	dBm
RF transmit power [1]		8.5	+10.0	-	-20 to +10 [2]	dBm
Maximum carrier frequency offset	1MB/s	-	4	150	<= 150	kHz
	2MB/s	-	4	150		kHz
Maximum drift rate	1MB/s	-	4	20	<= 20	kHz/50 µs
	1MB/s	-	5	20		
Carrier drift	1MB/s	-	7	50	<= 50	kHz
	2MB/s	-	6	50		

Notes:
[1] Output power is measured at the RF chip pin. Specified Min value is based on statistical variance and represents absolute limit rather than expected performance.
[2] Transmit power range in the Bluetooth specification.
[3] Measured using test packets with 37 octet payload.

Packing Information

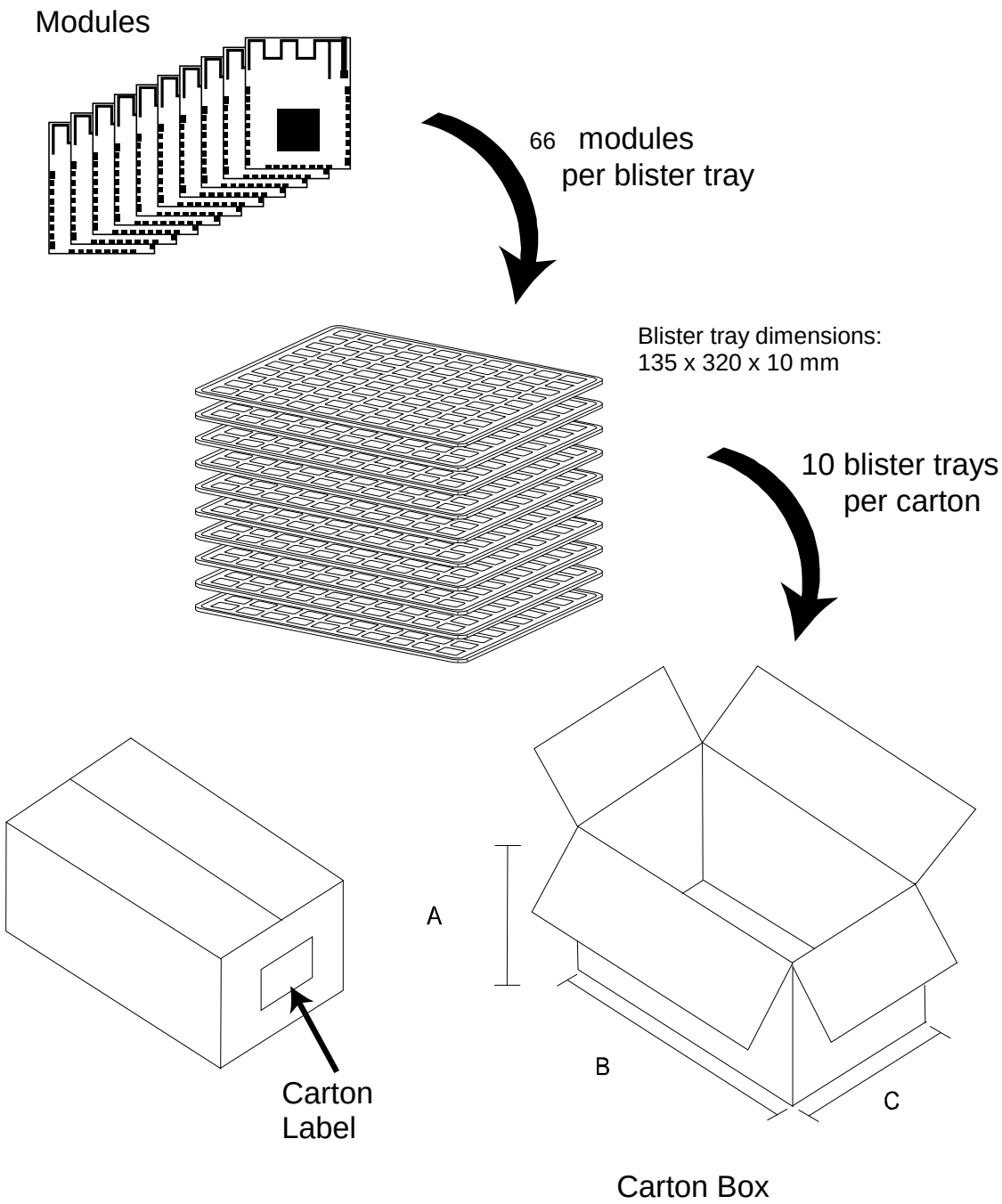

Model	A	B	C	Units	Quantity per Carton	GW / NW
QC35xFNA	8	34	14	cm	660 pcs	2.1 / 1.6 kg
QC35xFNA-S	8	34	14	cm	660 pcs	2.3 / 1.8 kg
QC35xFNB	8	34	14	cm	660 pcs	2.1 / 1.6 kg
QC35xFNB-S	8	34	14	cm	660 pcs	2.3 / 1.8 kg
QC55xFNA	8	34	14	cm	660 pcs	2.1 / 1.6 kg
QC55xFNA-S	8	34	14	cm	660 pcs	2.3 / 1.8 kg

* +/- 1cm / 0.1kg, or 10% whichever is greater for all packaging measurements.

Precautions

- **Storage Condition**

  This product should be stored without opening the packing, and under temperature 0-60 °C and humidity 30-70% RH. It should be used within 15 months after reception.

- **ElectroStatic Discharge (ESD)**

  This product is sensitive to ElectroStatic Discharge (ESD). Observe precautions for handling electrostatic sensitive devices. Such precautions are described in the ANSI/ESD S20.20, IEC/ST61340-5, JESD625-A or equivalent standards.

- **Module Reflow Installation**

  For RoHS/Pb-free applications, Sn96.5/Ag3.0/Cu0.5 solder is recommended.

Profile Feature	**Recommended Parameters**
Ramp-up rate before liquidous	< 2°C / second
Preheat	150-200°C 60-90 seconds
Maximum time at liquidous	40 – 80 seconds
Maximum peak temperature	230° - 240°C (below 250°C)
Ramp-down rate	< 6°C / second

Ordering Information

Part Number	**FW Code Available**	**Description**
QC350FNA	Please check with your sales representative	QCC3050 64Mbit (external antenna)
QC356FNA		QCC3056 16Mbit (external antenna)
QC356FNA-M3		QCC3056 32Mbit (external antenna)
QC350FNB		QCC3050 64Mbit with extended I/Os (external antenna)
QC350FNB-S		QCC3050 64Mbit with extended I/Os and shield can (external antenna)
QC356FNB		QCC3056 16Mbit with extended I/Os (external antenna)
QC356FNB-S		QCC3056 16Mbit with extended I/Os and shield can (external antenna)
QC356FNB-M3		QCC3056 32Mbit with extended I/Os (external antenna)
QC356FNB-SM3		QCC3056 32Mbit with extended I/Os and shield can (external antenna)
QC551FNB		QCC5151 32Mbit with extended I/Os (external antenna)
QC551FNB-S		QCC5151 32Mbit with extended I/Os and shield can (external antenna)
QC551FNB-M6		QCC5151 64Mbit with extended I/Os (external antenna)
QC551FNB-SM6		QCC5151 64Mbit with extended I/Os and shield can (external antenna)

Revision History

Rev.	Date	Description
01	2021-08-10	Preliminary release
02	2021-08-16	Updated module pin configuration table
03	2021-09-09	Added FNB module versions and updated FNA module pin configuration
04	2021-09-20	Minor corrections
05	2021-12-08	Updated block diagram, electrical specifications, radio characteristics, ordering and packaging info
06	2021-12-14	Updated ordering info

Bluetooth module installed note:
1. Take and use the module, please insure the electrostatic protective measures
2. Reflow soldering temperature should be according to the customer the main size of the products, such as the temperature set at 250+5°C for the motherboard.

About the module packaging, storage and use of matters needing attention are as follows:
1. The module of the reel and storage life of vacuum packing: Shelf life: 8 months, storage environment conditions: temperature in: < 40 °C, relative humidity: < 90% r.h.

2. The module vacuum packing once opened, time limit of the assembly.
a) check the humidity display value should be less than 30% (in blue), such as: 30% ~ 40%(pink), or greater than 40% (red) the module has been moisture absorption.
b) factory environmental temperature humidity control: ≤ -30° C ≤ 60% r.h.
c) once opened, the workshop the preservation of life for 168 hours.

3. Once opened, such as when not used up within 188 hours:
a) The module must be again to remove the module moisture absorption.
b) The baking temperature: 125 C 8 hours.
c) After baking, put the right amount of desiccant to seal packages.

Compliance of this device in all final host configurations is the responsibility of the Grantee. OEM integrators and end-users must be provided with specific operating instructions for satisfying RF exposure compliance. OEM integrators are instructed to ensure that the end user has no manual instructions to remove or install the device. Installation is limited to the host system evaluated in this filing. Additional host systems will require reassessment of radiated spurious emissions due to the lack of shielding on the module. SAR evaluation is valid for minimum 5mm distance to human bodies

FCC MODULAR APPROVAL INFORMATION EXAMPLES for Manual

This device complies with Part 15 of the FCC Rules. Operation is subject to the following two conditions:

(1) This device may not cause harmful interference.

(2) This device must accept any interference received, including interference that may cause undesired operation.

CAUTION: Changes or modifications not expressly approved by the party responsible for compliance could void the user's authority to operate the equipment.

NOTE: This equipment has been tested and found to comply with the limits for a Class B digital device, pursuant to Part 15 of the FCC Rules. These limits are designed to provide reasonable protection against harmful interference in a residential installation. This equipment generates uses and can radiate radio frequency energy and, if not installed and used in accordance with the instructions, may cause harmful interference to radio communications. However, there is no guarantee that interference will not occur in a particular installation. If this equipment does cause harmful interference to radio or television reception, which can be determined by turning the equipment off and on, the user is encouraged to try to correct the interference by one or more of the following measures:

- Reorient or relocate the receiving antenna.
- Increase the separation between the equipment and receiver.
- Connect the equipment into an outlet on a circuit different from that to which the receiver is connected.
- Consult the dealer or an experienced radio/TV technician for help.

FCC Radiation Exposure Statement:

This equipment complies with FCC radiation exposure limits set forth for an uncontrolled environment. This equipment should be installed and operated with minimum distance 20cm between the radiator & your body.

OEM INTEGRATION INSTRUCTIONS:

This device is intended only for OEM integrators under the following conditions:

The module must be installed in the host equipment such that 20 cm is maintained between the antenna and users, and the transmitter module may not be co-located with any other transmitter or antenna. The module shall be only used with the internal on-board antenna that has been originally tested and certified with this module. External antennas are not supported. As long as these 3 conditions above are met, further transmitter test will not be required.

However, the OEM integrator is still responsible for testing their end-product for any additional compliance requirements required with this module installed (for example, digital device emissions, PC peripheral requirements, etc.). The end-product may need Verification testing, Declaration of Conformity testing, a Permissive Class II Change or new Certification. Please involve a FCC certification specialist in order to determine what will be exactly applicable for the end-product.

Validity of using the module certification:

In the event that these conditions cannot be met (for example certain laptop configurations or co-location with another transmitter), then the FCC authorization for this module in combination with the host equipment is no longer considered valid and the FCC ID of the module cannot be used on the final product. In these circumstances, the OEM integrator will be responsible for re-evaluating the end product (including the transmitter) and obtaining a separate FCC authorization. In such cases, please involve a FCC certification specialist in order to determine if a Permissive Class II Change or new Certification is required.

Upgrade Firmware:

The software provided for firmware upgrade will not be capable to affect any RF parameters as certified for the FCC for this module, in order to prevent compliance issues.

End product labeling:

This transmitter module is authorized only for use in device where the antenna may be installed such that 20 cm may be maintained between the antenna and users. The final end product must be labeled in a visible area with the following: “Contains FCC ID:B4O-QC35XFNX”.

Information that must be placed in the end user manual:

The OEM integrator has to be aware not to provide information to the end user regarding how to install or remove this RF module in the user's manual of the end product which integrates this module. The end user manual shall include all required regulatory information/warning as show in this manual.

FCC MODULAR APPROVAL INFORMATION EXAMPLES for Manual

This device complies with Part 15 of the FCC Rules. Operation is subject to the following two conditions:

(1) This device may not cause harmful interference.

(2) This device must accept any interference received, including interference that may cause undesired operation.

CAUTION: Changes or modifications not expressly approved by the party responsible for compliance could void the user's authority to operate the equipment.

NOTE: This equipment has been tested and found to comply with the limits for a Class B digital device, pursuant to Part 15 of the FCC Rules. These limits are designed to provide reasonable protection against harmful interference in a residential installation. This equipment generates uses and can radiate radio frequency energy and, if not installed and used in accordance with the instructions, may cause harmful interference to radio communications. However, there is no guarantee that interference will not occur in a particular installation. If this equipment does cause harmful interference to radio or television reception, which can be determined by turning the equipment off and on, the user is encouraged to try to correct the interference by one or more of the following measures:

- Reorient or relocate the receiving antenna.
- Increase the separation between the equipment and receiver.
- Connect the equipment into an outlet on a circuit different from that to which the receiver is connected.
- Consult the dealer or an experienced radio/TV technician for help.

WARNING

Changes or modifications not expressly approved by the manufacturer could void the user’s authority to operate the equipment.

“CAUTION : Exposure to Radio Frequency Radiation.
Antenna shall be mounted in such a manner to minimize the potential for human contact during normal operation. The antenna should not be contacted during operation to avoid the possibility of exceeding the FCC radio frequency exposure limit.

IC Information

This device complies with Industry Canada license-exempt RSS standard(s). Operation is subject to the following two conditions:

(1) this device may not cause interference, and

(2) this device must accept any interference, including interference that may cause undesired operation of the device.

Cet appareil est conforme avec Industrie Canada exempts de licence standard RSS (s). L'operation est soumise aux deux conditions suivantes:

(1) cet appareil ne peut causer d'interferences, et

(2) cet appareil doit accepter toute interference, y compris les interferences qui peuvent causer un mauvais fonctionnement de l'appareil.

The end product must be labeled to display the Industry Canada certification number of the module. Contains transmitter module IC: 21698-QC35XFNX

Le dispositif d'accueil doivent etre etiquetes pour afficher le numero de certification d'Industrie Canada du module. Contient module emetteur IC: 21698-QC35XFNX

*** This device is going to be operated in 5 150 MHz ~ 5 250 MHz frequency range, it is restricted in indoor environment only.**

Information for OEM Integrator

This device is intended only for OEM integrators under the following conditions:

1) The antenna must be installed such that 20 cm is maintained between the antenna and users, and
2) The transmitter module may not be co-located with any other transmitter or antenna.

End product labelling

The label for end product must include

“Contains FCC ID: B4O-QC35XFNX, Contains IC: 21698-QC35XFNX”.

“CAUTION: Exposure to Radio Frequency Radiation.

This equipment complies with FCC radiation exposure limits set forth for an uncontrolled environment. This equipment should be installed and operated with minimum distance of 20cm between the radiator and your body. This transmitter module is authorized only for use in device where the antenna may be installed such that 20 cm may be maintained between the antenna and users."

Requirement per KDB996369 D03

2.2 List of applicable FCC rules

List the FCC rules that are applicable to the modular transmitter. These are the rules that specifically establish the bands of operation, the power, spurious emissions, and operating fundamental frequencies. DO NOT list compliance to unintentional-radiator rules (Part 15 Subpart B) since that is not a condition of a module grant that is extended to a host manufacturer. See also Section 2.10 below concerning the need to notify host manufacturers that further testing is required.3

Explanation: This module meets the requirements of FCC part 15C(15.247). part 15E(15.407)

2.3 Summarize the specific operational use conditions

Describe use conditions that are applicable to the modular transmitter, including for example any limits on antennas, etc. For example, if point-to-point antennas are used that require reduction in power or compensation for cable loss, then this information must be in the instructions. If the use condition limitations extend to professional users, then instructions must state that this information also extends to the host manufacturer' s instruction manual. In addition, certain information may also be needed, such as peak gain per frequency band and minimum gain, specifically for master devices in 5 GHz DFS bands.

Explanation: The EUT has a Ceramic Chip Antenna, a Metal Antenna , a PCB Antenna, Three Dipole Antenna. And the antenna use a permanently attached antenna which is not replaceable.

2.4 Limited module procedures

If a modular transmitter is approved as a "limited module," then the module manufacturer is responsible for approving the host environment that the limited module is used with. The manufacturer of a limited module must describe, both in the filing and in the installation instructions, the alternative means that the limited module manufacturer uses to verify that the host meets the necessary requirements to satisfy the module limiting conditions.

A limited module manufacturer has the flexibility to define its alternative method to address the conditions that limit the initial approval, such as: shielding, minimum signaling amplitude, buffered modulation/data inputs, or power supply regulation. The alternative method could include that the limited module manufacturer reviews detailed test data or host designs prior to giving the host manufacturer approval.

This limited module procedure is also applicable for RF exposure evaluation when it is necessary to demonstrate compliance in a specific host. The module manufacturer must state how control of the product into which the modular transmitter will be installed will be maintained such that full compliance of the product is always ensured. For additional hosts other than the specific host originally granted with a limited module, a Class II permissive change is required on the module grant to register the additional host as a specific host also approved with the module.

Explanation: The module is not a limited module.

2.5 Trace antenna designs

For a modular transmitter with trace antenna designs, see the guidance in Question 11 of KDB Publication 996369 D02 FAQ –

Modules for Micro-Strip Antennas and traces. The integration information shall include for the TCB review the integration instructions for the following aspects: layout of trace design, parts list (BOM), antenna, connectors, and isolation requirements.

a) Information that includes permitted variances (e.g., trace boundary limits, thickness, length, width, shape(s), dielectric constant, and impedance as applicable for each type of antenna);

b) Each design shall be considered a different type (e.g., antenna length in multiple(s) of frequency, the wavelength, and antenna shape (traces in phase) can affect antenna gain and must be considered);

c) The parameters shall be provided in a manner permitting host manufacturers to design the printed circuit (PC) board layout;

d) Appropriate parts by manufacturer and specifications;

e) Test procedures for design verification; and

f) Production test procedures for ensuring compliance.

The module grantee shall provide a notice that any deviation(s) from the defined parameters of the antenna trace, as described by the instructions, require that the host product manufacturer must notify the module grantee that they wish to change the antenna trace design. In this case, a Class II permissive change application is required to be filed by the grantee, or the host manufacturer can take responsibility through the change in FCC ID (new application) procedure followed by a Class II permissive change application.

Explanation: Yes, The module with trace antenna designs, and This manual has been shown the layout of trace design, antenna, connectors, and isolation requirements.

2.6 RF exposure considerations

It is essential for module grantees to clearly and explicitly state the RF exposure conditions that permit a host product manufacturer to use the module. Two types of instructions are required for RF exposure information: (1) to the host product manufacturer, to define the application conditions (mobile, portable – xx cm from a person's body); and (2) additional text needed for the host product manufacturer to provide to end users in their end-product manuals. If RF exposure statements and use conditions are not provided, then the host product manufacturer is required to take responsibility of the module through a change in FCC ID (new application).

Explanation: This module complies with FCC RF radiation exposure limits set forth for an uncontrolled environment, This equipment should be installed and operated with a minimum distance of 20 centimeters between the radiator and your body." This module is designed to comply with the FCC statement, FCC ID is: B4O-QC35XFNX.

2.7 Antennas

A list of antennas included in the application for certification must be provided in the instructions. For modular transmitters approved as limited modules, all applicable professional installer instructions must be included as part of the information to the host product manufacturer. The antenna list shall also identify the antenna types (monopole, PIFA, dipole, etc. (note that for example an “omni-directional antenna” is not considered to be a specific “antenna type”)).

For situations where the host product manufacturer is responsible for an external connector, for example with an RF pin and antenna trace design, the integration instructions shall inform the installer that unique antenna connector must be used on the Part 15 authorized transmitters used in the host product. The module manufacturers shall provide a list of acceptable unique connectors.

Explanation: The EUT has a Ceramic Chip Antenna, a Metal Antenna , a PCB Antenna, Three Dipole Antenna. And the antenna use a permanently attached antenna which is unique.

2.8 Label and compliance information

Grantees are responsible for the continued compliance of their modules to the FCC rules. This includes advising host product manufacturers that they need to provide a physical or e-label stating “Contains FCC ID” with their finished product. See Guidelines for Labeling and User Information for RF Devices－ KDB Publication 784748.

Explanation: The host system using this module, should have label in a visible area indicated the following texts: “Contains FCC ID: B4O-QC35XFNX, Contains IC: 21698-QC35XFNX”

2.9 Information on test modes and additional testing requirements%

Additional guidance for testing host products is given in KDB Publication 996369 D04 Module Integration Guide. Test modes should take into consideration different operational conditions for a stand-alone modular transmitter in a host, as well as for multiple simultaneously transmitting modules or other transmitters in a host product.

The grantee should provide information on how to configure test modes for host product evaluation for different operational conditions for a stand-alone modular transmitter in a host, versus with multiple, simultaneously transmitting modules or other transmitters in a host.

Grantees can increase the utility of their modular transmitters by providing special means, modes, or instructions that simulates or characterizes a connection by enabling a transmitter. This can greatly simplify a host manufacturer’s determination that a module as installed in a host complies with FCC requirements. **Explanation:** Top band can increase the utility of our modular transmitters by providing instructions that simulates or characterizes a connection by enabling a transmitter.

2.10 Additional testing, Part 15 Subpart B disclaimer

The grantee should include a statement that the modular transmitter is only FCC authorized for the specific rule parts (i.e., FCC transmitter rules) listed on the grant, and that the host product manufacturer is responsible for compliance to any other FCC rules that apply to the host not covered by the modular transmitter grant of certification. If the grantee markets their product as being Part 15 Subpart B compliant (when it also contains unintentional-radiator digital circuity), then the grantee shall provide a notice stating that the final host product still requires Part 15 Subpart B compliance testing with the modular transmitter installed.

Explanation: The module without unintentional-radiator digital circuity, so the module does not require an evaluation by FCC Part 15 Subpart B. The host shoule be evaluated by the FCC Subpart B.