DATE	SYM	REVISION RECORD	DR	CK
3/00	D	200180	DM	

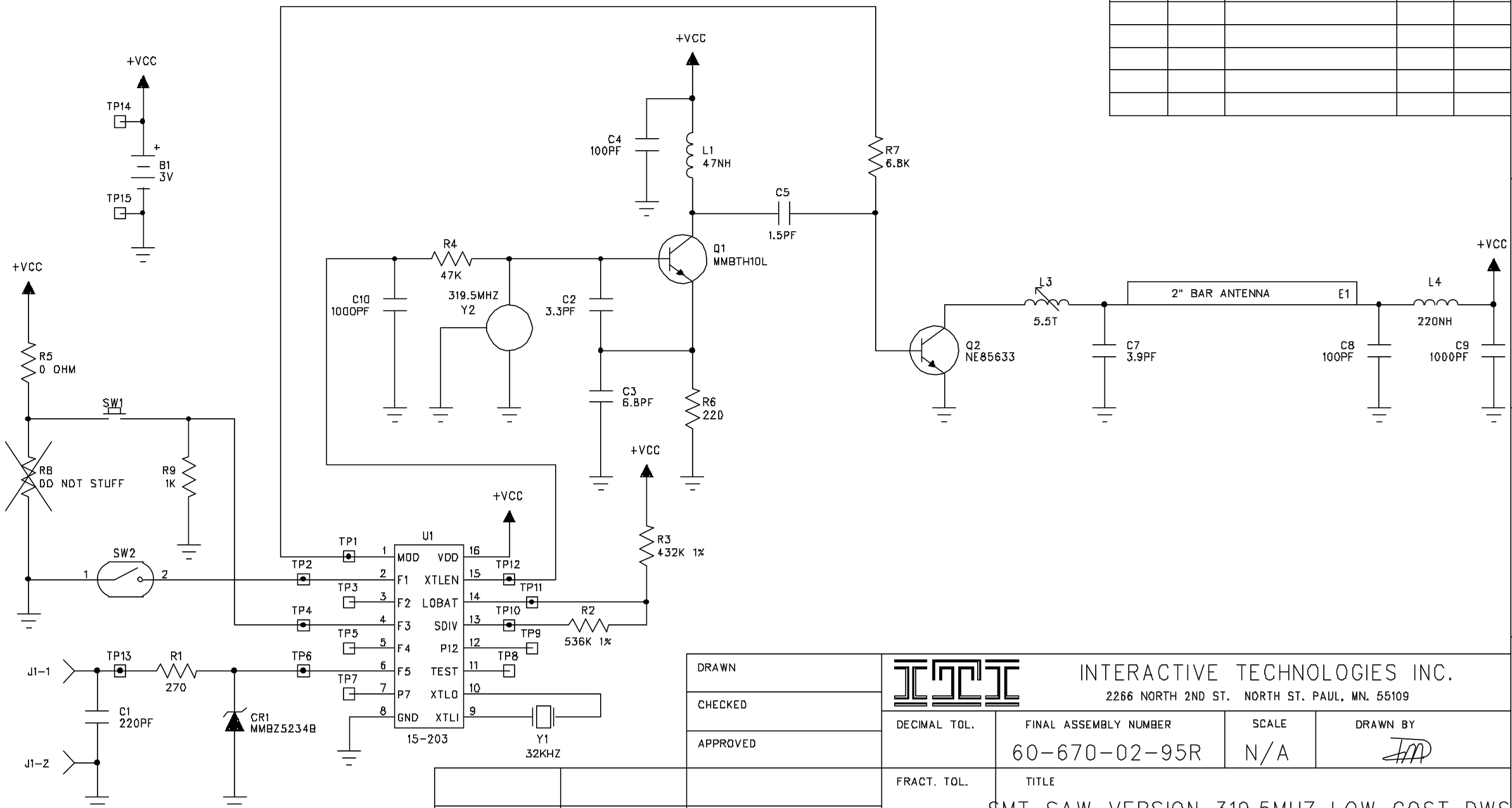

DRAWN	INTERACTIVE TECHNOLOGIES INC.	
CHECKED	2266 NORTH 2ND ST. NORTH ST. PAUL, MN. 55109	
APPROVED		

DECIMAL TOL.	FINAL ASSEMBLY NUMBER	SCALE	DRAWN BY
	60-670-02-95R	N/A	

FRACT. TOL.	TITLE
	SMT SAW VERSION 319.5MHZ LOW COST DWS

ANGULAR TOL.	DATE	SIZE	PART NUMBER	REV.
	30 NOV 01	B	52-679-95R	G

DATE	SYM	REVISION RECORD	DR	CK
3/97	C2	970032	DM	
5/97	D	960438	DM	
10/97	D1	970451	DM	
2/98	D2	980048	DM	
3/98	D3	980106	DM	
1/01	E		DM	

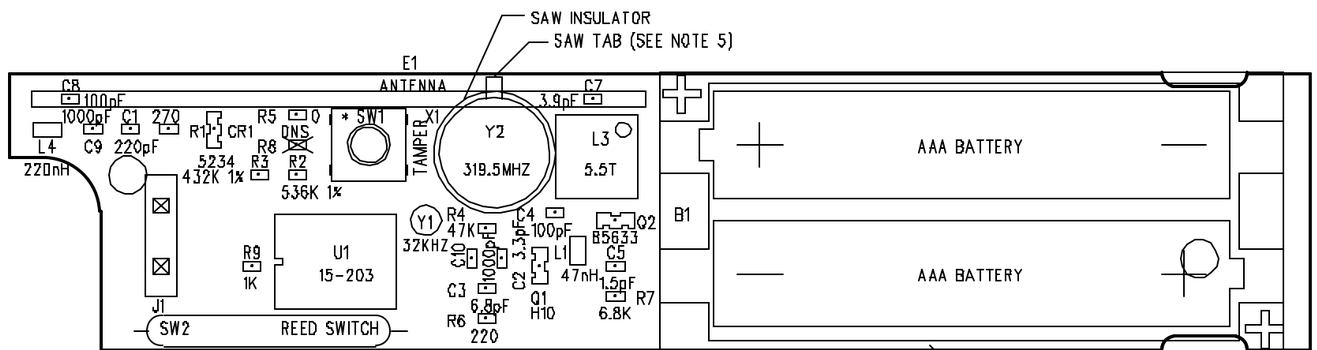

DATE CODE LABEL ON SIDE OF BATTERY BUCKET

NOTES:

1) 56-679-95R CONTAINS EVERYTHING SHOWN EXCEPT THE BATTERIES.

2) MAXIMUM FINISHED LEAD LENGTH OF .062" EXCEPT J1.

3) ALL COMPONENTS TO BE MOUNTED AS FLUSH AS POSSIBLE TO BOARD

4) "*" DENOTES COMPONENTS TO BE SECONDARY SOLDERED.
USE ALPHA SMT CORE SOLDER OR AN APPROVED EQUIVALENT. DO NOT WASH.

5) INSTALL SAW WITH TAB FACING THE EDGE OF THE BOARD.

DRAWN	INTERACTIVE TECHNOLOGIES INC. 2266 NORTH 2ND ST. NORTH ST. PAUL, MN. 55109			
CHECKED	DECIMAL TOL. XXX	FINAL ASSEMBLY NUMBER 60-670 -95R	SCALE 2:1	DRAWN BY JM
APPROVED	FRACT. TOL. XXX	TITLE SMT SAW VERSION LOW COST D/W SENSOR PARTS PLACEMENT DIAGRAM 319.5MHZ		
	ANGULAR TOL. XXX	DATE 30 NOV 01	SIZE B	PART NUMBER 57-679-95R	REV. G